O.M.B. SISTEMAS ELECTRONICOS, S.A.

FREQUENCY MODULATION BAND II MODULATOR-EXCITER

EM-25 DIG

TECHNICAL MANUAL

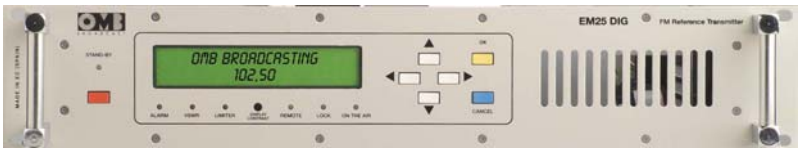

Head Offices:
Avda. San Antonio, 41.
50410 Cuarte de Huerva.
Zaragoza, Spain.
Phones: (976) 50-4696 six lines
Fax: (976) 46-3170
e-mail: europa@omb.com
Web: www.omb.com

International Division:
3100 N.W. 72nd. Ave. #112.
Miami, FL 33122. U.S.A.
Phones: (305) 477-0973 six lines
(305) 477-0974
Fax: (305) 477-0611
e-mail: usa@omb.com

Factories:
Camino de los Albares, 14 bajos.
50410 Cuarte de Huerva.
Zaragoza, Spain.
Phone: (976) 50-3580 six lines
Fax: (976) 50-3855
e-mail: europa@omb.com

Limited Warranty Conditions

I.- About Installation.

1.- Mains Voltage must be kept between ± 10% about its nominal value, unless otherwise specified. If were variations exceeding this tolerance, it will be indispensable to install a voltage stabilizer system within station. If transient overvoltages, due to electric motors, or other devices of this sort connected to the distribution line, were present, or if the distribution line is exposed to atmospheric electrical discharges, it must be indispensable the installation of isolation transformers and gaseous dischargers before connecting any equipment within station.

2.- All equipments must be connected to station ground system in order to avoid damage both to equipments and maintenance personnel too. It is necessary to connect a differential automatic switch (lifesaver) at station.

3.- Some equipments does not include interlock protection for open doors, covers or connectors. In that case, these equipments must be kept in key-locked places, with access only to conveniently qualified personnel that is previously noticed about not to open doors, covers or connectors without disconnecting station mains switch before performing this job.

4.- Transmitter equipments NEVER will be operated with output powers over its nominal values, or with signals or input informations others than those specified in its individual characteristics.

5.- Ambient temperature inside equipments' room, will accomplish technical specifications of equipments installed at station lodge. In absence of such specifications, maximum allowable temperatures will be from -5 to + 45 º C for Television equipments, and from 0 to + 40 º C for Sound Broadcast equipments.

6.- In case of operation at abnormally high or extremely high temperatures (over 30 to 40 º C), it is obligatory to install a forced cooling system that will keep temperature below its upper limit. In case of operation at abnormally or extremely low temperatures, it will be obligatory to install a thermostatic controlled heating system for equipment's room.

7.- Both equipment's surroundings and room must be free of dust and dirt. Ambient relative humidity will be kept below equipment's extreme specifications. In case of absence of this specification, allowable maximum will be 90 % of relative humidity, non-condensing. Average relative humidity will be kept under 70 %, non-condensing.

8.- Every transmission equipment able to radiate some quantity of RF power, must be connected to a load or antenna system, suited to its individual specifications, before being energized.

9.- Maximum allowable VSWR in antenna systems both for Television or FM Radio Broadcast operation of a given transmitter, will be 1.25:1, unless otherwise specified.

10.- For those transmitter equipments having power valve amplifiers, and that doesn't has an automatic shutoff cycle, and must be manually turned off, as a first step high voltage, or anode voltage, will be disconnected, keeping forced cooling system working during at least 5 minutes after high voltage disconnection, and only after this time, cooling system & filament voltage can be shutted off. O.M.B. Sistemas Electrónicos, S.A., is not responsible of damages to those power valves caused by sudden AC mains failures at station where our equipments are installed.

11.- Periodically, monthly as a maximum, technical personnel must visit station in order to perform a general equipment maintenance, unless otherwise specified. This maintenance will include output power check, VSWR of antenna systems, forced cooling or heating systems checks, both for equipments and station itself, including air filters cleaning, measuring of transmission frequency with eventual correction if necessary, and will perform a general check of fundamental parameters of equipments. In the event of any important change in some operation parameter, that will require replacement or readjustment of any unit, Customer MUST CONTACT FIRST WITH O.M.B. SISTEMAS ELECTRONICOS, S.A. BEFORE ANY ATTEMPT TO READJUST OR REPLACE ANY COMPONENT OR UNIT INSIDE EQUIPMENTS, IN ORDER TO KEEP VALID THIS WARRANTY.

12.- For equipments who are located in fixed racks or cabinets, those equipments must be effectively connected, according to International Installations Standards, to station ground system, whose total impedance measured to ground can't be higher than 5 ohms. Equipments must be connected to ground system so that they can be kept out of main discharge path between tower and ground.

II.- About Transportation.

1.- O.M.B. Sistemas Electrónicos, S.A. is not responsible of damages and/or detriments derived from mishandling, steal, robbery, theft or vandalism during the act of transportation of equipments to final or intermediate destination.

III.- About Storage.

1.- O.M.B. Sistemas Electrónicos, S.A. is not responsible of damages and/or detriments derived from unappropiate storage of equipments, within inadequate warehouses or outdoors, once equipments are delivered to transportist agency.

IV.- About Projects.

1.- O.M.B. Sistemas Electronicos, S.A. is not responsible of inadequate use of equipments made or registered by our Company, accomplishing propagation projects that are not performed by our Specialists.

V.- About Systems.

1.- O.M.B. Sistemas Electrónicos, S.A. is not responsible for performance of those equipments or systems that are not made, certified or registered by our Company.

VI.- About Operation

1.- O.M.B. Sistemas Electrónicos, S.A. is not responsible of damages and/or detriments derived from inadequate or negligent operation of equipments made, certified or registered by our Company, once those equipments are operated by personnel hired and/or employed by Customer.

VII.- General.

This Warranty covers and protects, during a period of 18 months after start of operations, all equipments made , certified or registered by O.M.B. Sistemas Electrónicos, S.A., including its components and units, against failures in workmanship that may occur during operation of those equipments, with the exception of power valves or semiconductor devices that are covered by its particular Factory's Guarantee. In this case, O.M.B. Sistemas Electrónicos, S.A. only can act as intermediary for negotiation with such Factory, about accomplishment of individual Guarantees.

For Validity of this Warranty, it is indispensable that all Paragraphs, from I to VI, be respected by the Customer. Otherwise, this Warranty will be automatically voided. This Warranty is self-activated with the reception by OMB Sistemas Electrónicos, S.A. of the "Guarantee Activation Manual". returned to OMB by Customer. If such Document is not received, this Warranty will be voided.

All repairings or adjustments covered by this Warranty are free of workmanship & materials costs and expenses, but postage and transportation expenses of equipments and O.M.B. technical personnel & specialists, if required, will be carried out by the Customer.

O.M.B. Sistemas Electrónicos, S.A.

➢ GENERAL SAFETY RECOMMENDATIONS

When connecting the equipment to the Mains power , please follow these important recommendations:

- This product is intended to operate from a power source that will not apply more than 10% of the voltage specified on the rear panel between the supply conductors or between either supply conductor and ground. A protective-ground connection by way of the grounding conductor in the power cord is essential for safe operation.

- This equipment is also grounded through the grounding conductor of the power cord. To avoid electrical shock, plug the power cord into a properly wired socket before connecting to the product input or output terminals.

- Upon loss of the protective-ground connection, all accessible conductive parts (including parts that may appear to be insulating) can render an electric shock. Equipment must be throughly connected to Station's ground system before any attempt to connect it to Mains electrical supply.

- To avoid fire hazard, use only the fuses of correct type, voltage rating, and current rating. Refer fuse replacement to Technical Manual and qualified service personnel.

- To avoid explosion, do not operate this equipment in an explosive atmosphere.

- To avoid personal injury, do not remove the product covers or panels. Do not operate the product without the covers and panels properly installed.

➢ GOOD PRACTICES

In maintaining the equipment covered in this Manual, please keep in mind the following, standard good practices:

- When connecting any instrument (wattmeter, spectrum analyzer, etc.) to a high frequency output, use the appropriate attenuator or dummy load to protect the final amplifiers and the instrument input.

- When inserting or removing printed circuit boards (PCBs), cable connectors, or fuses, always turn off power to the affected portion of the equipment. After power is removed, allow sufficient time for the power supplies to bleed down before reinserting PCBs. Always use discharge stick when available.

- When troubleshooting, remember that FETs and other metal-oxide semiconductor (MOS) devices may appear defective because of leakage between traces or component leads on the printed circuit board. Clean the printed circuit board and recheck the MOS device before assuming it is defective.

- When replacing MOS devices, follow standard practices to avoid damage caused by static charges and soldering.

- When removing components from PCBs (particularly ICs), use care to avoid damaging PCB traces.

FIRST AID IN CASE OF ELECTRICAL SHOCK

If someone seems unable to free himself while receiving an electric shock, **turn power off** before rendering aid. A muscular spasm or unconsciousness can make a victim unable to free himself from the electrical power.

If power cannot be turned off immediately, **very carefully** loop a length of dry non-conducting material (such as a rope, insulating material, or clothing) around the victim and pull him free of the power. Carefully avoid touching him or his clothing until free of power.

DO NOT TOUCH VICTIM OR HIS CLOTHING BEFORE POWER IS DISCONNECTED OR YOU CAN ALSO BECOME A SHOCK VICTIM

➢ *EMERGENCY RESUSCITATION TECHNIQUE*

Step 1

Check the victim for unresponsiveness. If there is no response, **immediately call for medical assistance**, and then return to the person.

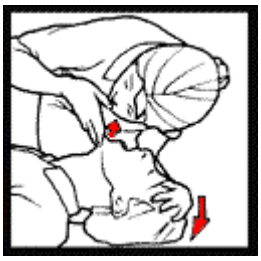

Step 2

Position the person flat on their back. Kneel by their side and place one hand on the forehead and the other under the chin. Tilt the head back and lift the chin until teeth almost touch. Look and listen for breathing.

Step 3

If not breathing normally, pinch the nose and cover the mouth with yours. Give two full breaths. The person's chest will rise if you are giving enough air.

Step 4

Put the fingertips of your hand on the Adam's apple, slide them into the groove next to the windpipe. Feel for a pulse. If you can not feel a pulse or are unsure, move on to the next step.

Step 5

Position your hands in the center of the chest between the nipples. Place one hand on top of the other.

Step 6

Push down firmly two inches. Push on chest 15 times.

CONTINUE WITH TWO BREATHS AND 15 PUMPS UNTIL HELP ARRIVES.

➢ *TREATMENT FOR BURNS*

- Continue treating victim for electrical shock.
- Check for points of entry and exit of current.
- Cover burned surface with a clean dressing.
- Remove all clothing from the injured area, but cut around any clothing that adheres to the skin and leave it in place. Keep the patient covered, except the injured part, since there is a tendency to chill.

  Splint all fractures. (Violent muscle contractions caused by the electricity may result in fractures.)
- Never allow burned surfaces to be in contact with each other, such as: areas between the fingers or toes, the ears and the side of the head, the undersurface of the arm and the chest wall, the folds of the groin, and similar places..
- Transport as soon as possible to a medical facility.

FREQUENCY-MODULATION BAND II MODULATOR / EXCITER

87.5-108.0 MHz

EM-25 DIG

TABLE OF CONTENTS

Description **Page**

Chapter I. Introduction. General Description 1

Chapter II. Technical Specifications 8

Chapter III. Description of Modules & Units 10
- 3.1.- Introduction 10
- 3.2.- Audio Processor 10
- 3.3.- Stereo Generator (Optional) 12
- 3.4.- Synthesized Channel Oscillator 12
- 3.5.- RF Power Amplifier 13
- 3.6.- Microcontroller & Display 14
- 3.7.- Switching Power Supply 15

Chapter IV. Installation, Operation and Maintenance 17
- 4.1.- Introduction 17
- 4.2.- System Connection 17
- 4.3.-Audio Baseband Presets and Connections 19
- 4.4.- Operation 23
- 4.5.- Commands & Programming 25
- 4.6.- Service and Maintenance 38

Chapter V. Schematics & Diagrams 39

Document: Frequency Modulation Band II R.F. Modulator/Exciter EM-25 DIG. Technical Manual.

Version: 2.0E Reference: EM25DIG.0E Date: November, 2001

Made by: Fernando A. Alvarez. B.SC.E.E. Electronics & Telecommunications Engineer.

Copyright: 2001. O.M.B. Sistemas Electrónicos, S.A. / O.M.B. America Division.

All Rights Reserved.

This Manual contains information that is exclusive property of aforementioned Company. Any type of unauthorized reproduction and/or distribution is forbidden. This Manual does not replaces the professional advise of Engineers or Lawyers. It is delivered "as is" , intended to be used as orientative reference. This Manual can be submitted to changes without previous notice. Customer must check first the updating status of this book before making use of it, calling OMB Sistemas Electrónicos, S.A. to be properly oriented by our qualified Specialists.

FREQUENCY-MODULATION BAND II MODULATOR / EXCITER

87.5-108.0 MHz

EM-25 DIG

Chapter I.

INTRODUCTION. GENERAL DESCRIPTION.

1.1.- Introduction:

The OMB 20/30 DIG PRO series transmitters are the result of experience gained by OMB during years of producing FM broadcast equipment, transmitters, stl and stereo encoders. These transmitters were specifically designed to comply with the latest international standards and the requirements of advanced broadcasters, meeting tighter specifications than usually required, at an affordable cost.

Great care went into producing a Hi-Fi-quality modulated signal, with low residual noise and distortion. The RF signal is also free from spurious and harmonic components to a higher degree than required by CCIR, European, USA and most other national standards. To obtain this outstanding performance, OMB strongly recommend to rely on qualified personnel to install and verify the equipment which makes up the radio station, i.e. the transmitter, the possible stl and power amplifier, the corresponding antennas, cables and connectors. This will assure to achieve the best performance and stability in time. To this aim, OMB especially recommend that their equipment should not be tampered with by unskilled personnel and its after-sale service is available to customers for any technical problem. Before proceeding to installation, please carefully read at least the general installation part of this manual, to gain confidence with the equipment.

The transmitters are very stable and changes to the internal pre-setting other than frequency and few other options are not usually required but, if they are, once again they must be done by skilled personnel, with proper instrumentation and service documentation. Improperly tampering with the settings may harm the apparatus or jeopardize the guaranteed performance.

THIS EQUIPMENT COMPLIES WITH ALL RELEVANT EMI / EMC AND SAFETY REQUIREMENTS, ETSI EN300384, ETS300447 AND EN60215 STANDARDS.

NO INTERNAL ADJUSTMENT OR PRESETTING IS REQUIRED DURING NORMAL OPERATION. EQUIPMENT SHALL BE PROPERLY GROUNDED AND BE OPERATED WITH ALL THE COVERS CLOSED TO PREVENT ELECTRICAL HAZARDS AND COMPLY WITH EMC STANDARDS.

OMB hence recommends for these equipments not to be handled by unskilled personnel, together with antenna system, transmission lines and the remaining components, both at Transmitters and related equipments and station's antennas system. A good installation, made by skilled and trained personnel will avoid many future troubles during station's exploitation process.

All the operations described in the Certification of Limited Warranty must be accomplished to have the right of make any claim concerning this Warranty, having free equipment service by OMB's technical personnel during this first exploitaition phase of Equipment.

1.2.-General Description.

The EM-25 DIG is a 30W rated,direct-synthesis,FM-modulated transmitter.Being digitally controlled,it is extensively on field programmable by front panel or remotely in every respect:frequency,power,channel sensitivity, preemphasis, functioning mode (mono,stereo,external mpx),clock and date and many other parameters without adjusting or substituting any part.A powerful 3-levels password management permits a very high degree of security and privacy as may be required in different situations.Equipment requires little o no maintenance and its simple modular layout facilitates stage testing and servicing.

As imposed by various national standards,these transmitters incorporate sophisticated low-pass audio filters on mono and stereo channels,and a sharp acting modulation limiter,which is usually set at a peak deviation slightly higher than 75 kHz.Its intervention may nevertheless be avoided,if required,pre-setting its threshold at a deviation higher than 150 kHz.Output frequency is phase-locked to a temperature-compensated crystal oscillator,which ensures superior precision and stability.A very low noise,low distortion VCO produces a harmonic-free,spurious-free signal.A lock control circuit inhibits the presence of power on the output until the apparatus is on the right frequency,when turning on.

To lower the noise threshold further,the low-frequency inputs are fitted with balanced input circuitry.The input level is precisely adjustable over a broad range,by means of a 0.5dB stepwise variable attenuators.The transmitter has an auxiliary input,specifically designed for RDS and SCA encoders.A modulation output permits to control other transmitters or STL's with the same internally processed high-quality mpx signal.

The alphanumeric display permits easy and accurate metering,adjustment and continuous monitoring of modulation levels,power,operation and internal parameters.All these information may be externally available on the same RS232 I/O bus that may be used to remotely control the transmitter.

Fig.#1. EXTERNAL VIEW OF EM-25 DIG MODULATOR /EXCITER

Figure #1 shows us the external view of Modulator/Exciter's cabinet,whose control panel has been simplified to a maximum,being Microcontroller in charge of practically to select and make all tests and adjustments of all parameters that are relevant to the normal Equipment's performance.Due to this fact,Front Panel has only a few control elements,since with only the four push buttons pertaining to Microcontroller (like those used to control movement of cursor in a Conmputer)and two keys,these virtually controlling all processes &parameters having place within Equipment.Microcontroller uses a Liquid-Crystal dot matrix as Alphanumeric Display nit in order to watch parameter's values,as it's asked for it,as can be seen in the corresponding Chapter in this Manual.

In addition to the serial I/O, some signals (RF power, On the air state, Disable line) are available on a parallel I/O socket for easy interfacing with others analog controllers or supervisory systems. A top-quality stereo encoder may be factory installed as option and even retrofitted in the field in a second time, requiring minimum technical skill. The powerful internal software and monitoring functions recognise its presence and enable its functions.

The RF power amplifier employs a broadband design and has a lot of of reserve: the output power is feedback-controlled for increased stability still higher than nominal level. High reflected power is limited to prevent output stage degradation; direct power is accordingly continuously reduced so as not to exceed the reflected power safety level. A sturdy telecom-grade high efficiency switch-mode power supply allows operation in a very wide and noisy mains environment.

FRONT PANEL COMMANDS AND SUPERVISION ELEMENTS.

The EM-25 DIG Front Panel is very clean and easy to control. The wide alphanumeric display and the control keyboard permits a simple self-explanatory menu-driven navigation through the various options.

A great care was taken in the design of the software to allow natural feeling with the controls to allow operation and programming in every respect of the Equipment without needing to extensively read the user-manual.

The password management, hides some functions and prevents tampering with the most critical options and data to unauthorized people.

Figure # 2 shows the simple Equipment's Front Panel, indicating all supervision & control elements:

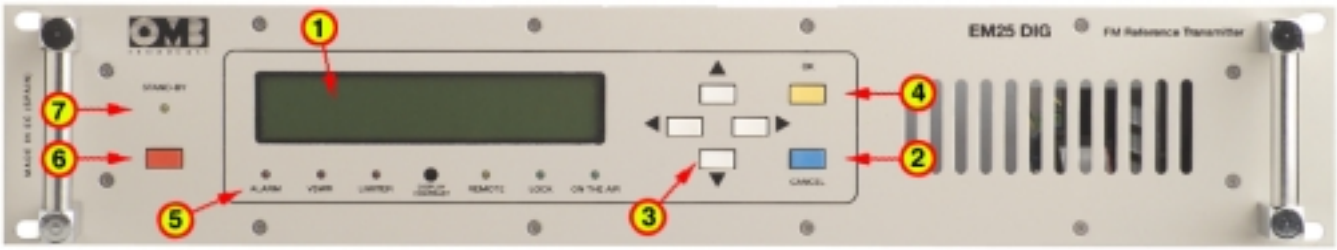

Fig. # 2. EM-25 DIG F.M. MODULATOR-EXCITER. FRONT PANEL.

These supervision & control elements are numbered in Figure # 2 as follows:

1.- Twin-row Alphanumeric dot-matrix LCD display, working directly with Microcontroller unit.

2.- Escape key to cancel menu or command.

3.- Keyboard to navigate through the different menus and options.

4.- Enter key to confirm some order or command

5.- Alarm LEDs display panel and operation LEDs panel shown in the form:

Alarm VSWR Limiter Remote Lock On the air STANDBY

Alarm LED lights on in event of any equipment's alarm condition. Limiter LED lights on showing high audio signal level at equipment's input, and subsequent operation of baseband peak clipper. VSWR lights on showing that RF output circuit is overloaded by a severe high VSWR condition.

On the air LED works together with STANDBY (7) yellow LED. It lights on when equipment is in normal operating condition, whereas STANDBY (7) LED is turned off, and vice versa.

Lock LED shows when Channel Oscillator's PLL is properly locked, some tenths of second after equipment is turned on.

Local LED indicates when equipment is locally commanded, whereas Remote LED shows remote-controlled operation.

6.- ON/STANDBY switch key with internal light indication for ON position, to put equipment in standby condition

This ON/STANDBY key do not power off equipment, which is still locked on frequency and ready to transmit as soon the key is pushed or a remote command is sent.

7.- STANDBY condition indicator clear LED.

REAR PANEL CONNECTORS AND CONTROLS.

All transmitter inputs and outputs are allocated on the rear panel. They are:
- The audio channels input sockets on balanced female XLR-type connectors
- The wide-band external processed / stereo composite signal input on a grounded unbalanced BNC connector
- The low-frequency limited (20k ÷ 100kHz) auxiliary channel input on a grounded, unbalanced BNC connector
- The lf modulation output for monitoring, RDS external synchronisation or re-broadcasting purpose, BNC-type
- The inverted wired RS232 DB9 female remote serial control port
- The parallel control port, DB9 male type
- The RF antenna connector, N-type
- The RF sampled output for counter or monitoring, BNC-type

Note that:
- The hot center-pin on the "EXTERNAL" BNC input is physically in parallel with the signal + input (pin 3) on the mono/right channel XLR socket. For this reason both connectors cannot be used at the same time.

Figure #3 shows Equipment's Rear Panel indicating all connectors and elements:

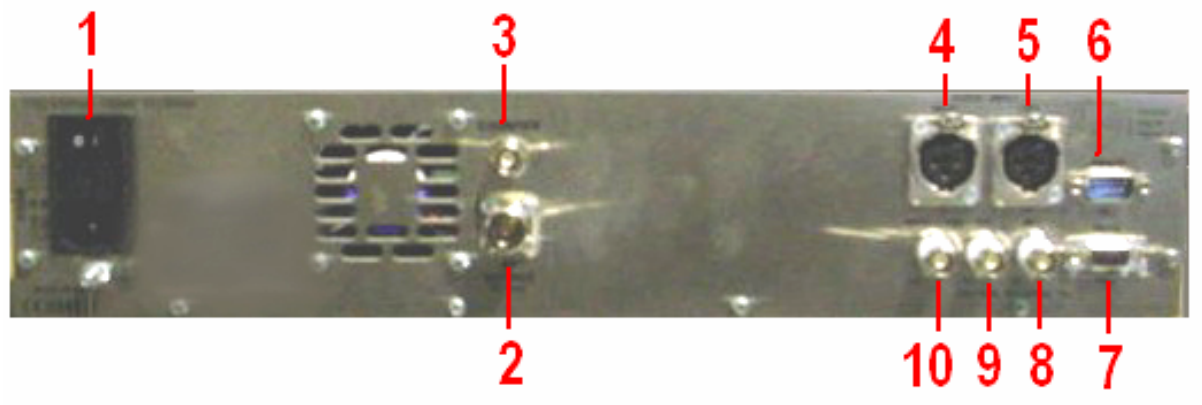

Fig.#3. EM-25 DIG F.M.MODULATOR-EXCITER. REAR PANEL.

Elements shown in Figure #3 above are numbered as follows:

1.-Mains IEC ON/OFF switch,mains voltage selector,socket &fuses block.

Please note that the transmitter is usually factory pre-set for 220-240 Vac nominal mains voltage.If requested,110-120 Vac range must be internally set on the power supply board.

2.-Series number Factory label.

3.-Output RF connector.Type "N"female.

4.-Output RF sample connector.Type "BNC"female.

5.-RF Power Amplifier's heat sink.

6.-Right channel audio input XLR balanced female connector.(See note in Page #4). For using internal stereo coder. (See equipment's rear panel for pin connections).

7.-Left channel audio input XLR balanced female connector.For using internal stereo coder.(See equipment's rear panel for pin connections).

8.-Remote operation DB-9 male connector:

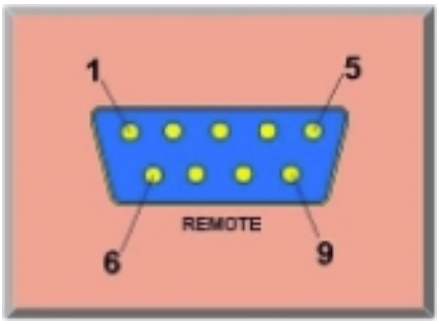

Fig.#4.REMOTE CONNECTOR PINS

Pins of DB-9 connector at Figure #4 above are connected as follows:

Pins 1-5-8 :GROUND
Pin 2 :ON THE AIR,presence of +12V indicating that equipment is under normal operation condition.
Pin 3 :FWD PWR.A DC voltage proportional to forward or transmitted RF power output from 0 to 50 W. DC from 0 to 5 volts.(5v =50W,non-linear)
Pin 6 :RF ENABLE.Shorting to ground this pin disables RF out.
Pin 7 :FAILURE.Logic low signal level means Alarm condition. +12V DC means normal operation. Imax=10 mA.

9.-RS-232 serial interface connector.This RS232 port manages only Tx,Rx and Return data signals,with no hand-shake.Being the two former wired signals inverted to the port,it needs a simple straight wired serial cable with appropriate connectors:usually a female DB9 or DB25 female to the PC port and a male DB9 connector at the transmitter end.Appropriate software is needed for communication.Do not connect the serial cable with neither transmitter or PC on.

10.-MPX connector.Type BNC female.For use in pre-coded stereo multiplex signal input.Flat input from 10 Hz to 100 KHz to feed stereo multiplex signal.Hi-Z unbalanced input (10 Kohms).

11.-AUX connector.Unbalanced Hi-Z BNC female connector,to feed a RDS or SCA encoder output signal.

12.-MODULATION output connector.Baseband modulation output for monitoring,re-broadcasting or RDS external synchronization.BNC female type,unbalanced Hi-Z (10 Kohms).

INTERNAL ARRANGEMENT OF PC BOARDS AND UNITS WITHIN CABINET.

Figure #5 below shows space occupied by the different units and PC boards within equipment,and internal arrangement of cabinet.All boards and units can be easily and quickly replaced in case of failure:

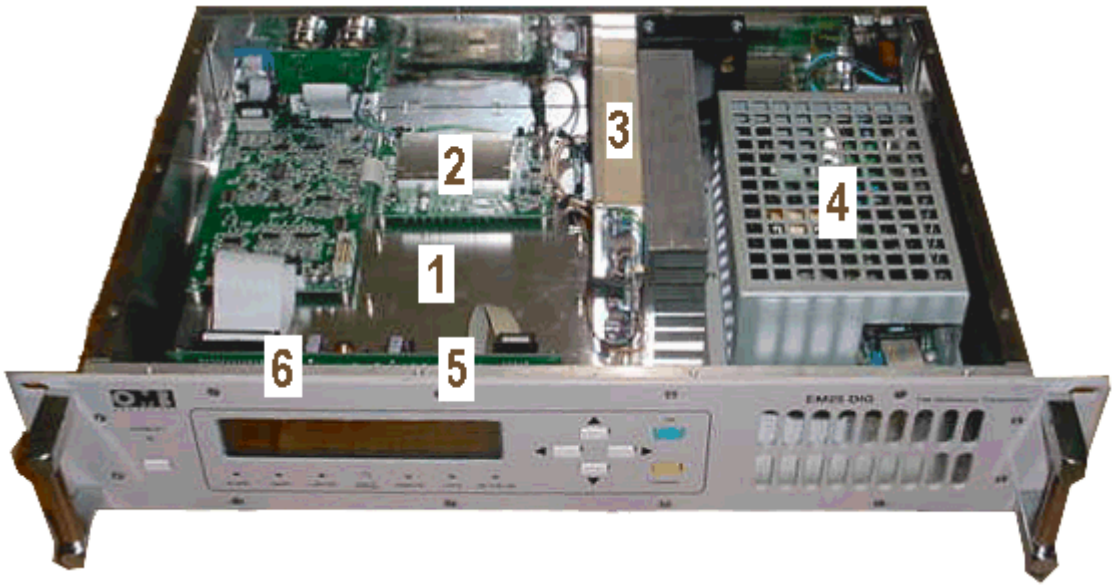

Fig.#5.EM-25 DIG F.M.MODULATOR-EXCITER.UPPER VIEW WITH COVER REMOVED.

Units can be easily identified according with their respective position within cabinet,as numbered in Figure #5 above:

1.-Audio Processor Card and Stereo Generator.

2.-Channel Oscillator and PLL Circuit Board.

3.-RF Power Amplifier Unit.

4.-Switching Power Supply Unit.

5.-Microcontroller Unit.

6.-LCD Display Unit.

In the correspondent Chapter,a particular description of each unit will be given.

----------o0o----------

FREQUENCY-MODULATION BAND II MODULATOR / EXCITER

87.5-108.0 MHz

EM-25 DIG

Chapter II.

TECHNICAL SPECIFICATIONS & CHARACTERISTICS

Signal to Noise Ratio:
Monaural ..... >78 dB. typical 86 dB from 30 to 20,000 Hz.
Stereophonic ..... >72 dB. typical 77 dB from 30 to 20,000 Hz.

CCIR weighted S/N:
Monaural ..... >75 dB. typical 81 dB.
Stereophonic ..... >68 dB. typical 77 dB.

Harmonic Distortion:
NOTE: Limiter set to 150 KHz deviation threshold.
For 75 KHz dev. ..... <0.05%. typical 0.02%.
For 150 KHz dev. ..... <0.2%. typical 0.05%

Stereo Crosstalk:
w/External Encoder ..... < -50 dB.
w/Internal Encoder. From 100 to 5000 Hz ..... < -60 dB.
w/Internal Encoder. From 30 to 15000 Hz ..... < -50 dB.

Program audio channel Frequency Response from 30 to 15000 Hz ..... ± 0.1 dB.

Attenuation at Audio Filter Rejection Band (f = 19 KHz) ..... > 50 dB.

Deviation Limiter Threshold ..... Adjust. between 0 and +7 dBm.

Stereo Multiplex Input Frequency Response.From 10 Hz to 100 KHz ..... ±0.1 dB.

Auxiliary Input Frequency Response .From 10 to 100 KHz ..... ±0.2 dB.

Mains Supply Requirements ..... 115 / 230 vAC ± 15%. 50/60 Hz.

Power Consumption at 25 watts RF output level ..... 130 VA / 75 watts.

Operating Temperatures Range ..... from 0 to +35ºC recomm. -10 to +45ºC max.

Mounting Dimensions (w/o handles) ..... width: 19" height: 2U. Standard 19" Rack.

Dimensions ..... 483 mm width x 88 mm height x 334 mm depth.

Modulation ..... Frequency, ±75 KHz peak dev.

Modulation type ..... 180K F3E monaural. 256K F3E stereo.

Oscillator's synthesis steps ..... 10 / 100 KHz.

Frequency error ..... < ±200 Hz.

Frequency drift ..... < 250 Hz over temperature <100 Hz/year.

RF Output Power ..... adjustable between 1 and 25 watts rms nominal.

Maximum Allowable Reflected RF Power ..... 4 watts.

RF Harmonic Products ..... < -60 dBc. typical -70 dBc.

RF Spurious Products ..... < -80 dBc. typical -95 dBc.

RF Output Impedance ..... 50 ohms unbalanced. N Female connector.

Audio / Multiplex Input Level ..... adjustable between -3.5 and +12.5 dBm for ±75 KHz peak dev.

Audio / Multiplex Input Impedance ..... select.10 Kohms / 600 ohms, bal./unbal.

Common Mode Input Rejection from 20 to 15000 Hz ..... >50 dB. typical >60 dB.

Audio Input Connectors ..... XLR Female balanced.

SCA/RDS Channel Input Level:
±7.5 KHz dev. ..... adjustable between -12.5 to +3.5 dBm.
±2.0 KHz dev. ..... adjustable between -24 and -8 dBm.

SCA/RDS Channel Input Impedance ..... 10 Kohms unbal. BNC Female conn.

Modulation output level..... from 0 to +10dBm at ±75 KHz peak dev.

Pre-emphasis Time Constant ..... variable 0 / 50 / 75 usec. ± 2%.

FREQUENCY-MODULATION BAND II MODULATOR / EXCITER
87.5-108.0 MHz
EM-25 DIG

Chapter III.
DESCRIPTION OF UNITS & BOARDS

3.1.- INTRODUCTION.

The EM-25 DIG transmitter comprise 5 or 6 internal modules, as can be seen in the drawing “General view” and in the "General wiring diagram", both contained in this manual:

-The Audio Processor & RF control Main Board.

-The Microcontroller Unit & Display Board.

-The Stereo Encoder Module (optional)

-The Channel Oscillator & PLL Board.

-The RF Power Amplifier Unit.

-The Switching Regulated Power Supply Unit.

For the detailed description of each module on the following pages, always refer to the corresponding electrical diagram, in the correspondent section of the manual.

THIS SECTION IS ONLY AIMED TO GENERAL EXPLANATION, REFERENCE AND SERVICE PURPOSE BY SKILLED PERSONNEL. AS EXPLAINED IN THE PREVIOUS SECTIONS, INTERNAL ADJUSTMENTS ARE NOT REQUIRED DURING NORMAL OPERATION. TAMPERING WITH INTERNAL SETTINGS VOIDS THE WARRANTY, MAY HARM THE APPARATUS AND JEOPARDIZE THE GUARANTEED PERFORMANCE.

COMPONENT VALUES SHOWN MAY VARY FOR PRODUCTION REQUIREMENTS.

DUE TO THE TECHNOLOGY USED, MOST MODULES AND ESPECIALLY THOSE IN SMT ARE NOT INTENDED TO BE REPAIRED IN CASE OF FAILURE AND MUST BE REPLACED WITH NEW ONES.

3.2.- THE AUDIO PROCESSOR AND RF CONTROL MAIN BOARD.

This is the most complex board in the transmitter and supports the Audio input processing, with level adjustment, audio-pass filtering and limiting, the RF control section and the I/O interfaces. It also interconnects the various transmitter modules with flat-cables. Its electrical diagram is splitted in two sheets for clarity purpose: they will be

examined in sequence. In the first diagram sheet are situated the I/O interfaces both audio and digital ports and the analog RF control. Let's start to briefly consider each block diagram.

In the upper left side of the diagram are located the audio channels amplifier/buffers made with 6 op-amp sections of IC1 and IC2. Two impedance selector jumpers for the audio channels leads the pack and a protection network made by resistors and diodes protects the inputs from occasional static discharges, as required for **CE** compliance. Four unity-gain active buffers follow and than two balanced to unbalanced signal converters, which drive the electronic attenuator in the 2nd sheet. The last op-amp in IC2 (d), amplify the auxiliary channel input with a -0.1dB upper corner band >>200 kHz and drives the third channel of the electronic attenuator.

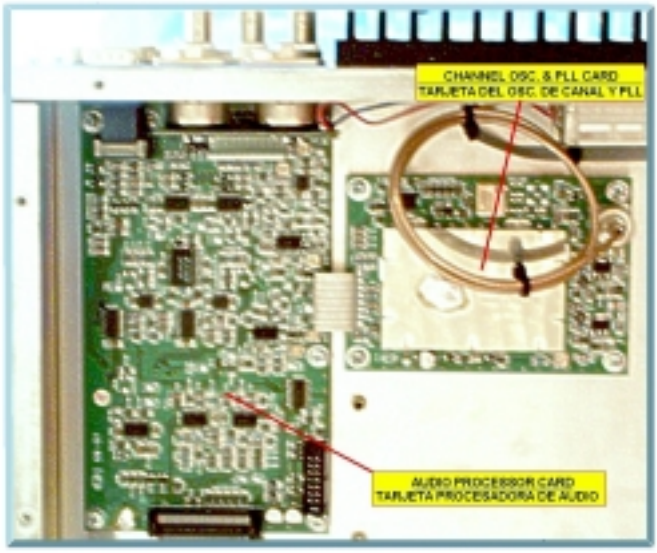

Fig. # 6. AUDIO PROCESSOR AND R.F. CONTROL MAIN BOARD.

On the lower left of the diagram are the RS232 interface (IC5) and the parallel remote I/O active interface with its protection network, built around TR1, TR2 and TR3. A wired OR pull-up makes the logic levels <1V as 0 and 10-12V for 1.

On the lower right section of the diagram it is located the RF power controller. The RF direct and reflected power signals coming from the output directional coupler are amplified by IC3 in a symmetrical circuit. The direct-power control circuit, built around IC4a continuously drives the RF output stage gain,varying the bias supply voltage to the RF output MOSFET transistor. The reflected-power limiting circuit IC4b only acts on the same loop when the IC3b output voltage is greater than the threshold set by the voltage on the R49/R50 network. A third and fourth section of IC4 filter and buffer the signal coming from the Microcontroller and set the reference level for the output power loop. TR4 disable the RF output when the synthesizer is not locked on the correct frequency. In the upper right section of the sheet it is shown the control bus connector to the CPU, which carries the digital control lines on the lower pins and the analog lines on the upper ones. From this connector comes the power supply too: only +12.5V and -12.5V are used in the board.

Let's now go to the second sheet of this diagram. Beginning from the lower left side, we find IC8, which makes a 3-channel digitally controlled attenuator. It separately manages left, right and auxiliary channel, while the external multiplex signal is processed in the same channel as the right one. 3 buffer/amplifiers follow each channel: IC7aa, IC8a and IC12a. The output of the first two amplifiers drive the pre-emphasis stages, whose time constants can be

digitally set at 0, 50 and 75µs, through the analog gates of IC9. A limiter stage follows, built around D8 and D9 diodes acting as clippers. By acting on the limiter's reference voltage driven by the Microcontroller through IC13a, the limiter threshold level +Vl & -Vl can be adjusted. RT4, if present, impose a top limit to the limiter.

The signal is then sent to the stereo-encoder circuit's input sections if present. Contemporary, the signal on the mono right channel path is sent to a low-pass filter, consisting of the section built around IC10 and IC11, which attenuates the frequencies above 15 kHz.

The switch IC14 selects the signal issuing from the non-pre-emphasized input section through R124 or from the pre-emphasis-and-filter section through R128 or from the stereo-encoder through R131. IC12b buffers the chosen signal and mixes it with that issuing from the auxiliary channel. When required, the diode D17 further limits the resulting total signal. The latter is then sent to the FM modulating/exciting circuit via IC12c buffer circuit and adjusted in level by RT6 as required. A separate section of IC12 separately buffers the modulation signal for monitoring purpose, and sends it to the modulation output connector.

IC15 deserialize the digital signal sent by the Microcontroller, to control the transmission channels with IC14 and preemphasis action with IC9. Two output lines from IC15 are used to latch the remote output lines "Failure" and "On the air".

3.3.- THE OPTIONAL STEREO ENCODER MODULE.

The encoding circuit uses an 8-step switching technique, which ensures excellent performance with a relatively simple circuit. In addition, by this technique, the first harmonics that are associated with the switching devices are the 7th and 9th (266 and 342 kHz); this simplifies the design of the low-pass filter on the multiplex signal.

The signal is filtered beyond 15 kHz by the two precision active low-pass filters built around IC1 ÷ IC4. It is then buffered by IC3d and IC4c and applied to the encoding circuit comprised in IC8. Another higher frequency low-pass filter follows to remove higher order harmonic products. This filter is also made with highly precise active circuitry built around IC5 and IC6a, b. The latter section (c) of IC6 performs phase equalization. The four analog switches comprised in IC7 permits to select the mono or the stereo-encoded signal and to slightly vary the encoder gain to adjust for the 90% audio modulation in stereo vs. 100% in mono. Two jumpers on BD1 permit to select either Left or Right or Left+Right channel for mono operation, with no output level change. As factory configured, both jumpers are installed, to mix Left and Right channel for "MONO L+R" operation.

Circuits IC10, IC11 make the encoder's time base; IC9 synthesizes the 19kHz pilot frequency, which is filtered and buffered by IC5a. A separate 1Vpp output is provided on J2 to drive carrier synchronization on a possible external RDS generator.

3.4.- THE SYNTHESIZED CHANNEL OSCILLATOR.

It's a classical phase-locked-loop circuit with 10-kHz step synthesis across the entire FM band. The very low-noise, fundamental-frequency VCO consists of a FET-oscillator transistor TR5, modulated by the varactor diode set D4÷D7, which also sets the operating frequency. The circuit is sensitivity compensated vs. carrier frequency variation so that its modulation gain varies less then 0.5 dB across the entire operating range. Modulation distortion is typically lower than 0.03% with over 90 dB S/N ratio in the mono mode in the 30 - 20,000 Hz band.

The RF signal is buffered and amplified by three successive transistors TR6 ÷ TR8, from which is derived the feedback signal to the PLL and the drive signal for the output RF stage. This latter is composed by two small MOSFET transistors TR9 and TR10 and attains some 900 mW output level (+29 dBm) over the full FM range. To correctly operate TR9 and TR10 require a gate bias voltage, which is factory pre-set by RT1.

The digital PLL circuit is entirely contained in IC2, whose frequency reference is derived by a highly precise temperature compensated oscillator (TCXO1) running at 12.8MHz. To correctly operate on the chosen frequency, IC2 must be serially programmed with complex data. This task is done by the Exciter's Microcontroller through 3 control lines.

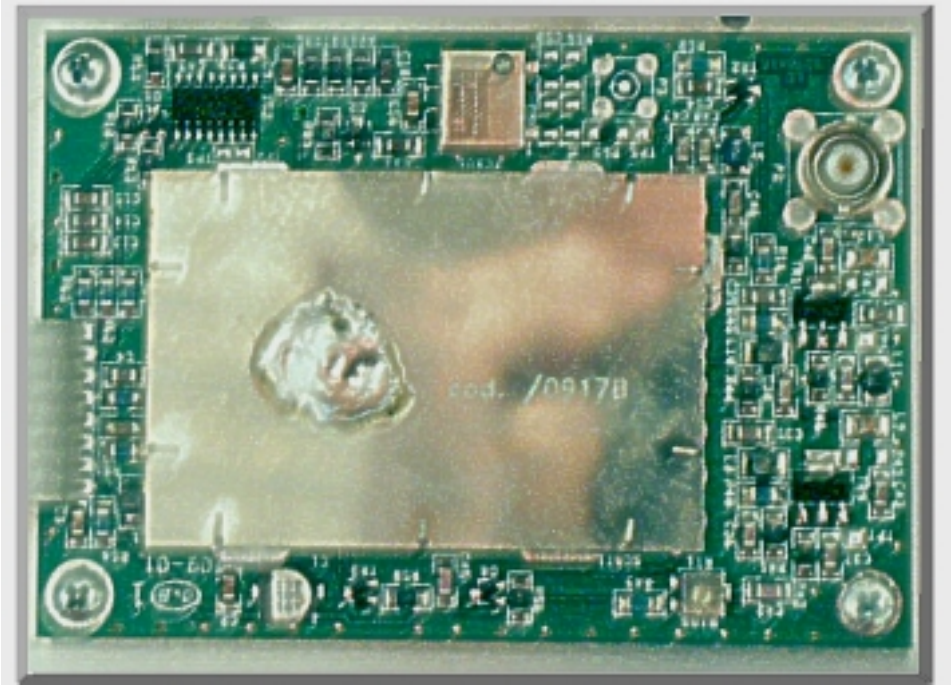

Fig. # 7. CHANNEL R.F. OSCILLATOR & PHASE-LOCKED LOOP CIRCUIT CARD.

IC1 either performs loop filtering from IC2 frequency comparator output to the varactor diodes and lock detection. Note that bias voltage is removed from output transistors through TR4 and TR3 to turn-off RF when the PLL is not locked on the right frequency. The control loop was designed to ensure that cross-talk added to stereo-composite signal is below -55 dB at 30 Hz, and is virtually not influent at just slightly higher frequencies.

3.5.- RF POWER AMPLIFIER UNIT.

This stage is designed with only one high gain MOSFET RF power transistor, which has some 17 dB gain, in a broadband design, with +28V supply.

A resistive input attenuator (R2, R3, R4), when present, enhances matching with the preceding stage and contributes to insulate the two stages. After that, a broadband matching network feeds the transistor gate. A low-pass filter that attenuates the harmonics to a value that is generally below -70 dBc, follows the transistor drain. In the RF output path, a directional coupler generates a dc signal, which is proportional to the direct and reflected RF power. Another coupled loop samples the RF, providing an attenuated monitor output that may be used by a frequency counter or a modulation analyzer.

The transistor gate is biased by a Zener network and a potentiometer which adjusts the idle current of the transistor. RT1 is usually set so that to provide some 200mA drain current, with +12Vdc control voltage applied and no RF input. Varying the control voltage towards a negative supply progressively disables the amplifier transistor, so effectively acting as an AGC input. In fact the power management circuit, in a closed loop driven by the output sensor circuitry, varies this voltage. This will accordingly vary the output power to obtain the pre-set value and cope with alarm and start-up conditions.
The output transistor is a rugged device which easily could pass the nominal 25 W power output. OMB suggest never exceeding 25 ÷ 28W output power, even when the exciter could generate more than this.

3.6.- THE MICROCONTROLLER UNIT AND DISPLAY BOARD.

This circuit board is basically simple. It contains the Microcontroller, the keyboard and few other circuits which we will briefly discuss. Microcontroller & Display Units are shown in Figure # 8 below. The Microcontroller has 3 digital 8-bit ports and an analog one. This latter is the interface with the analog signals that must be measured in the transmitter. A fast peak rectifier built around IC4 drives one of these analog lines. All audio or baseband modulation plus some steady state signals are multiplexed to its input by IC3, so requiring only one peak rectifier and increasing the number of the analog channels. One analog channel reads the internal temperature through the optional TR3 sensor.

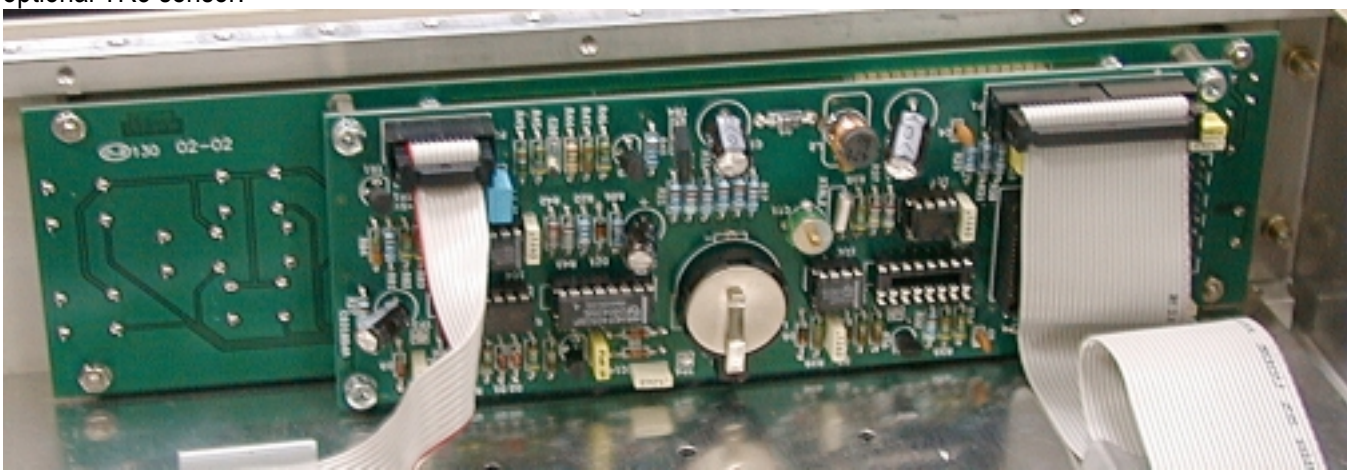

Fig. # 8.- MICROCONTROLLER UNIT AND DISPLAY BOARD

The simple specialized IC6 performs clock and date functions as a stand-alone unit, backed-up by a NiMnh battery which keeps circuit active for a long time when the power is removed.

The keyboard switch set is sequentially interrogated one hundred times in a second to determine if a key was pushed. IC5, a serial to parallel converter, drives the front-panel LEDs and the display backlighting with TR2.

The alphanumeric display is a separate module, connected to the board by a small flat-ribbon cable, as shown in Figure # 9 above. 11 digital lines from the Microcontroller drive this module. The internal board potentiometer RT1 regulates the LCD contrast and may be used to change it for different situations. A separate power supply current for the backlight LEDs is provided by R41 and R42: these resistors become quite hot when the display is full on and their heat someway influence the internal temperature read by TR3.

No other regulation is provided on the board. The precision of the measurements is guaranteed by design by the precision of the components and the reference voltage source IC1.

3.7.- THE POWER SUPPLY AND SWITCHING REGULATOR UNIT.

The power supply regulator is a sturdy high-efficiency, direct mains switch-mode type. A diode bridge full-wave rectifies the mains voltage in the 220-240 Vac mains range. In this range preset, the power supply accepts mains input varying wider than 160 ÷ 260 VAC, generating an unregulated 300VDC voltage which is used by the regulator as input voltage. When the lower 110/120 VAC mains range is needed, this must be internally pre-set on the board mounting the jumper JP1. In this case the diode bridge DB1 acts as a doubler, attaining the same dc raw voltage for the regulator.

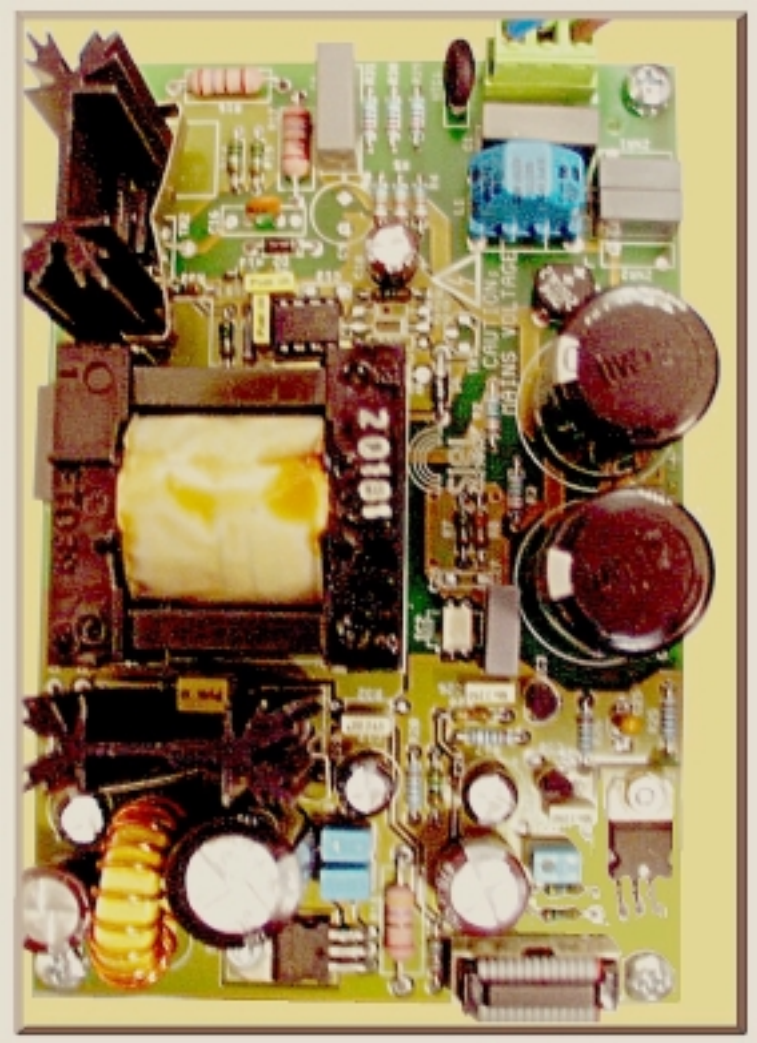

Fig. # 10. SWITCHING POWER SUPPLY UNIT. PRINTED CIRCUIT CARD.

The regulator is a flyback type, where the PWM control circuit IC1 drives the power MOSFET TR2. The oscillation frequency is fixed nearly 100 kHz. Several windings on T1 generate the output voltages. The main output voltage is that one which delivers +28V/2.5A. This output is regulated by the main control loop, through the precision reference IC3 and the opto-coupler IC2, which routes the control on the primary side of the regulator.

The secondary +12.5V / 0.5A output is secondary regulated by TR3 and TR4 driven by the precision reference IC4. Only loose regulation is provided on the negative nominal -12.5V /0.1A leg, which really delivers -13.0 ±1Vdc in working condition, but is very stable as the loads on the various output are constant as in usual conditions.

All outputs are post-filtered by LC cells, which remove the high frequency pulse contents on the output power supply lines.

WARNING

IN THIS BOARD, MAINS VOLTAGE AND OTHER DANGEROUS VOLTAGES ARE PRESENT: DO NOT MAKE ANY INTERVENTION ON THE BOARD WHEN IT IS CONNECTED TO MAINS. SERVICE IS LIMITED TO SKILLED TECHNICIANS ONLY.

AN INSULATION MAINS TRANSFORMER IS REQUIRED TO SERVICE OR OVERHAUL THE BOARD.

----------o0o----------

FREQUENCY MODULATION BAND II

MODULATOR / EXCITER

87.5-108.0 MHz

EM-25 DIG

Chapter IV.
INSTALLATION,OPERATION & MAINTENANCE.

4.1.- INTRODUCTION.

Before proceeding further, make sure that mains voltage corresponds to the factory-set value (usually 220/240 Vac). In case it differs, a proper jumper must be internally set on the mains supply regulator board of the apparatus. This must be done by skilled technicians.

In case the voltage selection is changed to 110/120 Vac, the fuses must be substituted with others of double current capacity, compared to those for the higher voltage.

Install the transmitter in a dry, ventilated and possibly dust-free environment, so that it will operate in the +10 ÷ +35 °C temperature range.

Connect the exciter to the load and audio source using suitable cables and connectors, which should be periodically inspected.

The EM-25 DIG has many features of a hi-fi Exciter and should be installed and audio-wired with the same care, avoiding earth loops as much as possible. When these conditions are met, the transmitter performs superbly.

The exciter is adequately shielded and can be installed close to the program Studios without fear that it will affect the audio equipment. This arrangement has the advantage that the audio level, deviation and power parameters can be continually monitored. The exciter can also be installed away from the studio and connected with several meters of LF co-axial cables with no adverse effect on modulation quality. A remote installation usually requires a STL (Studio to Transmitter Link).

As the final modulation performance is dependent on the whole system arrangement, carefully consider the whole system planning. Some advice is given on the appropriate paragraph in this Manual.

4.2.- SYSTEM CONNECTION.

1) Connect the N-type output connector, marked “RF OUT” to the antenna or RF Power Amplifier with top-grade 50-ohm shielded cable.

Note that although practically any 50-ohm specified cable has enough power management capability, its power attenuation can be too high and may excessively lower the power available to the antenna. For this reason only

low-attenuation type cable must be used for direct antenna connection: in this case we suggest Cellflex, Andrew or similar low-loss 1/2" cable.
In some applications, where the power is over-dimensioned or the cable length is small, RG213 cable will do. RG58 is also adequate for connection to a subsequent amplifier, little apart.

2) Connect the Audio inputs as required for operation and detailed in the following chapters for various situations. If needed connect the serial and/or parallel remote control I/O ports as required, or jump this step to a subsequent moment.

3) Switch-off the mains rear switch and connect the transmitter to mains and ground system.

4) Before turning on the exciter in the system, pre-set if possible frequency and power separately on a dummy load, to avoid system problems at the first turn-on of the equipment. If this cannot be done, check that the transmitter's maximum output power (25 ÷ 30 W) does not harm the downstream amplifier stage (if any).

If a proper dummy load is not available and the status of the apparatus (frequency and set power) is not note, it may be possible for low-power (<100W) OMB transmitters to operate for reduced time without any load, to permit setting the transmission parameters. In this case the exciter will automatically limit its output power to the maximum permitted with infinite VSWR, i.e. few watts. When turn-on without any load, immediately reduce output power to 1W or less, to reduce the overload to the output stage and damage risks. Then set the appropriate frequency as required. Refer to the appropriate programming section of this manual for the procedure, if not known.

5) Turn-on the rear panel mains switch, then push-on the front panel on/stand-by switch to operate the transmitter and check that:

- All LEDs and the display briefly light on and off for the initial check.
- The yellow "STAND-BY" LED turns off, correspondingly turning on the "ON" green LED on the cap of the stand-by switch.
- The green "Local" LED must light immediately and the upper green “Lock” LED must light up after some seconds, when frequency is locked.
- When locked, the RF power will rapidly increase to the pre-set level in a mild increasing mode.Once preset power is reached, the "On the air" led will light completely, if the power is set >1W (at least 1.1W). Till that moment it will turn off and on, signalling the RF power is on but not correct.

Equipment is now functioning in the pre-set mode, delivers power and can be accessed to be programmed or simply to monitor its functions with the front panel display.

The first request it will do will be entering the password for the required level of authorization/security. The equipment is factory pre-set with the first 2 levels disabled: this will allow to set most of the operating parameters, including power, frequency, input levels, clock and date. Some more critical parameters it will require the upper 3rd level: be sure to know it if you need this access.

THE EXCITER WILL ALWAYS TURN-ON IN THE SAME STATE AS IT WAS IN THE LAST TIME IT WAS TURNED OFF FROM MAINS, I.E. POWER, FREQUENCY AND EVEN ON OR STAND-BY CONDITION. AS SOON YOU TURN-ON THE REAR PANEL MAINS SWITCH BE PROMPT TO THAT, EVEN WHEN JUST FACTORY DELIVERED.

6) The first task to manage when turning on the equipment as factory delivered is to set-up the passwords. At least the 3rd (the highest) level must be **immediately** changed: if any unauthorized people change it or you loose it, there is no way to change it for security reasons and the equipment may become unmanageable. **Gaining again access to the equipment will require factory reprogramming or changing of the internal Microcontroller**.

For this reason be sure to write down and keep it **immediately** in a secure place: **there is no way to read it** after you have programmed down and confirmed.

For practically any parameters that may require some setting in the field, the 2nd level password is enough and may be used for any standard service requirement. The main purpose of the existence of the 3rd level is a security assurance for the user if he loses control on the lower password levels.

7) If not already done, adjust frequency and RF power as required and check reflected power on the exciter display. To this aim search for RF power menu and read the corresponding value of direct and reflected output power.

For proper operation, the reflected power reading should typically be less than 10% of the direct power value, 3W max. Any higher reading may indicate that the antenna is not properly connected or the subsequent amplifier input needs to be tuned.

8) Check and/or set clock and data and all transmission parameters as required, i.e. channel sensitivity and deviation, mono/stereo, preemphasis etc. Refer to the appropriate section of the Manual.

4.3.- AUDIO BASEBAND CONNECTION AND PRESETS.

4.3.1.- Baseband Connection & Wiring and Impedance Selection.

EM-25 DIG supports balanced or unbalanced signals with selectable input impedance.

The audio inputs are basically balanced and have selectable 600/10k ohm resistive impedance, factory pre-set at 10k ohm. They can be connected to the balanced output of a professional mixer console or to the unbalanced one of a cheaper unit without appreciable degradation.

Audio mono or stereo channels inputs are “XLR” female connectors. They should be connected to the output of the mixer console, or of any audio-processor that drives it, by a balanced coaxial cable connected to pin 3 (+) and pin 2 (-). The cable shield, connected to the ground of the driving equipment, has to be connected to pin 1.

In case of unbalanced drive, input pin 2 shall be short-circuited with ground and shield on pin 1, while the signal shall be available on pin 3. Higher impedance selection, in this case, will be 5 kohm instead of 10 kohm.

Fig. # 11. IMPEDANCE SELECTION JUMPERS

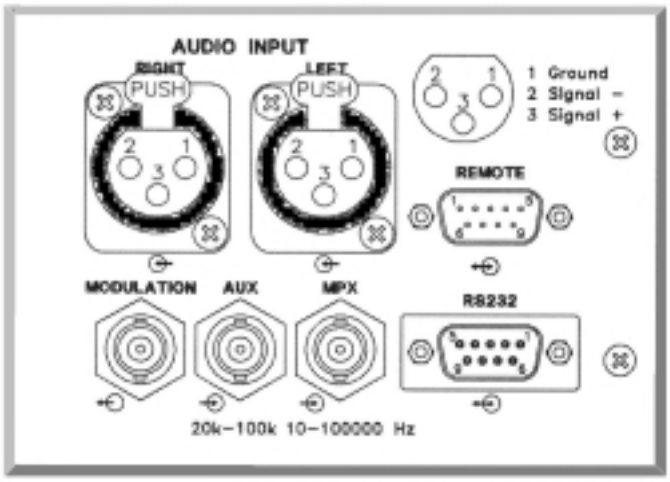

Fig. # 12. CABINET'S CONNECTIONS REAR PANEL

Selection of the input impedance is one of the very few pre-sets that may be done only internally. For this purpose you must gain internal access by removing the upper cover. While no risk is involved, remove mains connection before doing it. As many as 14 Phillips screws must be unscrewed to remove the cover. Be sure to put them in place again when done, for EMI/EMC compliance.

Preset of input impedance is easily done by accordingly selecting the jumpers JP1 and JP2 located on the input board, shown to the right, just on the rear of the input connectors. Impedance selection is silk-screened on the component mask of the board. Its position is shown in Figure # 11 above.

With balanced driving signals, the connecting cables to the audio source may be well more than 100-m long.

Mpx or an externally processed signal, usually an unbalanced signal, can be supplied to the female BNC connector, marked "MPX", which is internally parallel wired with the "RIGHT" channel connector: for this reason it is not possible to connect signals to these two connectors at the same time. Higher impedance position is 5 kohm in this case too. Figure # 12 above shows equipment's connections panel located at Rear Panel' s right side.

Connect this input with a 50-ohm (RG58) cable for a few meters' distance; if the distance exceeds several tens of meters, use 75-ohm (RG59) or 92-ohm (RG62) cables.

The auxiliary-channel connector is also of the grounded BNC female type. Use 50-ohm (RG58) or 75-ohm (RG59) cables to connect to the driver. The same applies to the monitor "MODULATION" output, if needed.

4.3.2.- Pre-emphasis setting

Low frequency mono and stereo channel signals have to be adequately "pre-emphasized". Standard preemphasis time constant is 50 and 75µs, the former being usually factory pre-set.

Check whether this is correct for your country (it is usually correct for any European country and part of the Pacific areas). It is not correct for USA and Center & South America standards, which require 75µs.

If above correction is needed, simply set it on the "mode" frame of the transmitter menu, which also includes mono/stereo operation and frequency. See appropriate section further on in this Manual.

4.3.3.- Audio Baseband input level range, setting and requirements

In the following paragraph we will refer to 0 dBm as the audio signal which produce 1mW on 600 ohm, i.e. a 775 mVrms / 2200 mVpp sinusoidal. Irrespective of the impedance, we will continue to assume 0 dBm as an audio signal whose peak is + (or -) 1100 mV.

In the same way, when talking of the modulation, we will assume as 0 dB the signal which produces 100% maximum allowed modulation, i.e. 75 kHz deviation.

There is no absolute worldwide standard regarding audio peak level as modulation signal for a transmitter, nor for the mean deviation. Many Broadcasters use 0 or +6 dBm as LF peak level for 100% modulation, USA often uses +10 dBm.

Many European countries specify +6dBm for 40 kHz deviation (which is assumed to be a "mean" modulation). This allows for 5.5 dB headroom to max 75 kHz deviation, i.e. +11.5 dBm for 100% modulation.

A higher level minimize system and ambient noise. A level too high may over-stress the input circuitry of the transmitter, reducing the dynamic distortion-free range over the nominal level (headroom). It may also be costly to produce with high quality.

For this reason OMB recommends, whenever possible, to adopt +6 ÷ +11.5 dBm as nominal peak level for audio modulation purposes.

EM-25 DIG exciters allows an input audio level on the main channel/s ranging -3.5 ÷ +12.5 dBm to be set for 100% modulation, with almost no difference in modulation performances, if high quality signal is provided. Even at the higher level, at least +6 dB headroom is additionally allowed: i.e. up to 150 kHz deviation, with no distortion. Obviously this deviation is not currently allowed by the broadcast standards and the limiter threshold must be set at its maximum to permit undistorted performance.

The auxiliary channel's level ranges -12 ÷ +4 dBm to produce 10% modulation, i.e. 7.5kHz deviation. Consequently typical input levels for an SCA-type signal (10% max. admissible deviation) are 0.2 ÷ 1.0 V rms / 696 ÷ 2200 mVpp, when the input is set between -11.5 and +2.5 dB. All the same, an RDS-type signal could be accommodated in the 0.052 ÷ 0.33 V rms / 150 ÷ 930 mVpp level range, to produce the standard peak deviation of 2 kHz, as above.

Regulating the nominal input level for 0 dB modulation on the transmitter is an easy task. From the proper menu screen it may be seen varying the modulation in real-time with the level adjustment, in 0,5 dB steps. The modulation is reported as deviation in kHz and in dB, referred to 75kHz.

In this screen, the reported deviation includes any other auxiliary signal as pilot tone, when in stereo, and RDS or SCA signals applied at the same time. To measure only the audio channel signal, go to the Left/Right level menu screen.The auxiliary channel level is slightly less immediate to set, being measured in dB only. Remember that 0 dB corresponds to 7.5kHz deviation, i.e. 10% max allowed total modulation. The typical level for RDS so being -11.5 for 2 kHz deviation. This menu screen accounts only for deviation due to auxiliary signal. To see the added effect on the total deviation, go to the MPX menu.

The exciter's internal limiter is of the peak-clipping type; this means that as soon at it cuts in, modulation distortion increases sharply. For this reason, the modulation signal should be kept under control to prevent intervention of the limiter.

The cut-in limiter threshold, when enabled, is factory pre-set to +2.5 dB (100 kHz peak value). It may be set from 0 dB (75 kHz) up to +7.1 dB (170 kHz). This threshold value is mostly specified in the various national standards, and tolerance to short over-modulating peaks varies from country to country. Some countries do not permit the user to disable the limiter or change the level. Note that the limiter action begins slightly after the pre-set level, with no action at all till that. The difference between the threshold level and hard clipping is some 0.5dB.

In any case, the modulation peak value that is internationally admitted for FM is 75 kHz for peaks that are not extremely short. For this reason, the limiter's cut-in threshold should never be too high.

It is highly recommended to use an external multi-band limiter to optimize modulation, with higher tolerance for any audio-signal peaks. Such devices momentarily reduce the amplifier circuits' gain if the threshold is exceeded and prevent severe, significant distortion.

Any external compressor, limiter or audio meter must be frequency compensated with the same time constant of the pre-emphasis to modulate or monitor deviation properly.

Therefore, the audio level shall be constantly and correctly monitored and adjusted, to prevents as much as possible, the internal limiter from cutting in. On the other hand, the audio level should be as high as possible, to achieve the best signal/noise ratio on reception.

The tendency to over-process audio signals is common in many local broadcasting stations: some sort of processing is advisable and we recommend using a top grade multiband compressor, but not to compress the signal too much as this impairs the original dynamics.

The audio response of the EM-25 DIG exciter is extremely flat, without perceivable loss on low and high audio frequency: for this reason large frequency alterations of the audio signal supplied by using a so-called "frequency equalizer," are not advisable. An increase of the low and high frequency contents of the audio signal by more than a few dB can cause general degradation of modulation dynamics and improper functioning of the limiter.

4.3.4.- RS232 Serial Port.

The RS232 port manages only Tx, Rx and Return data signals, with no handshake. Being the two former signals wired inverted to the port, it need a simple straight wired serial cable with appropriate connectors: usually a female DB9 or DB25 female to the PC port and a male DB9 connector at the transmitter end. Appropriate software is needed for communication. Do not connect the cable with neither transmitter or PC on.

4.3.5.- Parallel REMOTE Port.

Remember that this port accommodates some lines for simple direct control / monitor on a DB9 male connector. They are:

- Pin 1, 5, 8 Ground.
- Pin 2, On The Air: a +12V/10 kohms signals that the transmitter is delivering substantial RF power.

- Pin 3, Direct power: a signal proportional to direct power is present, with a pseudo square law. Range is 0-5Vdc /10 Kohms impedance. On EM-25 DIG 5V stands for 50W.
- Pin 6, RF enable: a shorted circuit to ground disables RF. signal level +10VCD/1mA max.
- Pin 7, Fail: logic low signal means alarm. Correct functioning is signalled by +12V/10 Kohms Maximum current sinking capability <10mA.

4.4.- OPERATION.

4.4.1.- Monaural Broadcasting, from a Monophonic Audio Source through Main Mono Channel:

1) Connect the “right” (or mono) input connector to the corresponding audio source as described in the "system connection" section. No connection to the "left" channel input is needed. The signal runs through the channel processor and is 15-kHz filtered and pre-emphasized.

2) Select the "MODE" command menu screen (cf. relevant section on the manual) and select "MONO" operating mode. Confirm or change also 50 or 75µs preemphasis as required.

4.4.2.- Monaural Broadcasting, from a Stereophonic Audio Source through the Optional Internal Stereo Encoder:

1) Connect both the "left" and “right” input connector to the corresponding audio source as required for stereo transmission as described above. The audio signals will run through the channel processors and will be 15-kHz filtered and pre-emphasized. The internal stereo-encoder will blend the stereo input source to transmit in monaural mode. In this case the transmitter is already preset for stereo operation if needed, simply reversing transmission mode to "stereo".

2) Select the "MODE" command menu screen and select "MONO L+R" operating mode. Confirm or change also 50 or 75µs preemphasis as required.

4.4.3.- Mono or Stereo Broadcasting from a Radio-Link Receiver or an External Encoder:

1) In this case, the signal is already multiplexed and pre-emphasized. Use the “MPX” If input. The signal skips the coding and filtering stage and therefore is not pre-emphasized.

2) Select the "MODE" command menu screen and select "EXT MPX" operating mode. While it is anyway advisable to select the proper preemphasis time-constant as required for your country, in this position this selection is not influent.

4.4.4.- Stereo Broadcasting from a Stereophonic Audio Source through the Optional Internal Stereo Encoder:

1) Connect the XLR-type modulation input connectors, marked “Left” (channel) and “Right” (channel), to the output of the two channels from the mixer console or stereo source. They will be internally 15-kHz filtered and pre-emphasized.

2) Select the "MODE" command menu screen and select "STEREO" operating mode. Confirm or change 50 or 75µs preemphasis as required.

4.4.5.- Operation with a RDS or SCA Encoder:

1) Connect the BNC-type “Aux” connector to the output of the RDS or SCA Encoder. If the internal optional stereo-encoder is used, connect the "MODULATION" BNC output to the pilot-tone synchronization input of the RDS encoder, if present.

2) Select the "AUX" command menu screen and push "ENTER" to vary the channel sensitivity. Adjust both transmitter sensitivity and/or the level of the external generator for the deviation required, as explained in the previous Manual sections. Consider that 0dB modulation reading (not the input level) in this field means 10% total modulation or 7.5kHz deviation, i.e. the standard setting for a SCA auxiliary channel. In the case of RDS, a reading of -11.5dB or 2kHz is the correct value of modulation.

3) Total modulation and deviation may be read in the "MPX" display screen, with the addition of any other composite signal contemporary present. If only the final modulation due to the auxiliary signal requires to be measured, momentarily disconnect every other baseband signals present on the inputs and change mode to "MONO" or "MPX EXT" mode, for the measuring operation only. This is not required when you display only the auxiliary signal.

4) If you have changed transmission mode selection or removed any input signal for check purpose, reverse to the original setting and reconnect any previously disconnected signal.

4.4.6.- Modulation Adjustment with Broadcast Signal:

Check the overall modulation level for adequacy, as follows:

1) Select the display menu screen "MPX": The total modulation will be displayed, both in dB and as deviation in kHz. An analog moving bar and a digital peak reading are shown at the same time.

2) Send a sufficiently constant musical signal to modulator input, check that the measure hovers around 0 dBm and moves into the upper range during signal peak only and by no more than 1 or 2 dB. For any other reading, adjust the mixer console’s “MASTER” output attenuator until the above conditions are obtained. The red “Limiter” alarm LED should never or rarely light up, as this would indicate distortion.

If the limiter is set just above 75 kHz, the red LED will light up above 0dB and the modulation measured will never show a much greater value. Factory pre-set is 100 kHz (+2.5 dB).

4.4.7.- Check of Pilot Tone on Stereophonic Broadcast:

In case of internal stereo-encoder, no allowance is externally provided to change the pilot tone level, which is usually internally pre-set for 9-10 % of modulation, i.e. -21 ÷ -20 dB or 7 ÷ 7.5 kHz deviation.

In case it is externally provided by a separate stereo-encoder, it must be measured in absence of audio modulation and any other auxiliary signal as below described:

1) Disconnect any signal from the external stereo-encoder input and any RDS or SCA signal.

2) Select the display menu screen "MPX" and check the pilot tone, which must be now the only signal present. The standard level is that previously stated, i.e. 9-10 % or -21 ÷ -20 dB, and may be adjusted accordingly on the external stereo encoder to suit the request.

3) Reconnect any previously disconnected signals as done.

4.4.8.- Very low power level transmission:

EM-25 DIG exciter is not specified at power levels less than 2 watts, as with some power and frequency combinations (usually at less than 0.5 watts), some sub-harmonic and/or spurious signals may be generated and the power level stability is not so good as at higher power. In addition it may be dangerous to use an exciter which may generate a 15 times higher power level if improperly set.

So were low power level transmission was imperative, preset it very carefully and preset also the maximum output power which may be adjusted by main regulation: the software permits to adjust the max RF output level (cfr. relevant section in the Manual). Carefully verify with a spectrum analizer that the exciter is correctly functioning at and just below the operating power.

The installation of the exciter is thereby completed. Many other monitoring and control facilities are provided by the internal display and software and are remotely accessible. Navigation through the menu driven software is suggested and encouraged to gain confidence with the options: no extensive training is needed for the most common options. Nevertheless some options are hidden for security purposes and require always the password: read the correspondent section of the manual to know all possible functions which are provided and presettable.

OMB wishes you success in your work and remind you that they are always available for further information or to tackle any specific problem.

WARNING

OPERATION WITHOUT THE ANTENNA OR WITH A FAULTY ANTENNA CONNECTION MAY CAUSE DEGRADATION AND POSSIBLE DESTRUCTION OF THE FINAL STAGE. THIS FAILURE IS NOT COVERED BY THE GUARANTEE.

4.5.- COMMANDS AND PROGRAMMING.

Exciter allows an exhaustive control of all transmission parameters and a complete programmability and monitoring through the various software controls via the front panel keyboard and display. The same functions are remotely addressable with proper software, which is not included as a standard option other than some simple demo programs.

For a description of remote capability see the proper section on the manual. In this section we will examine the front panel menu-driven operational capability.

4.5.1.- Passwords Organization:

The passwords organization is set in 3 security levels, each with its own password. A higher level permits to change the lower levels authorizations and passwords.

The password is composed by 4 alphanumeric characters, including extended capital and lowercase ones and several special symbols. We suggest using a wide range of characters as the security level raises, to increase the possible combinations. No password is ever shown: it is always masked by dummy characters as "...." or "****". Nevertheless it may be always changed with the higher level authorization. Here is the purpose of each level:

Level 1: Lower security level. It is needed to access to most of the monitoring and control menu screens, not permitting to alter or programming any operating parameter. It is set to "off" state as default, permitting to anybody to navigate freely through exciter's monitoring menu information. OMB suggests leaving it in this state if a high "privacy" level is not needed.

If set to "on" it will show the default menu screen #00, requiring password for any other information or pre-set. Failure to insert a correct password of any level will impede any other access to the commands for the time-out length (usually 3 minutes). No change to the functioning mode is done in case of incorrect password input. No information is available on the display regarding the transmitter functioning.

Level 2: Service level. This password is needed for any functioning set-up as frequency and power, sensitivities, clock and date etc. Its use is reserved only to service technicians who need wide access to the transmitter presets and functions.

Although the default factory state is "off", OMB suggests changing the default state and password immediately at the first power on, to prevent to unauthorized people to tamper with transmitter commands, if the default word is known or the state is set to "off".

Level 3: Highest security level. It is always "on" by default and reset anyway to "on" after the display time-out, for security purposes. Its knowledge is deserved only to **very few** people and must be immediately registered after setup and kept in a secure place: **there is no way to read it** after you have setup and confirmed on the exciter.

This password must be **immediately** changed at the first pre-set of the equipment: if any unauthorized people tampers with it or you lose it, there is no way to change it if you do not know the correct word for security reasons and the apparatus may become unmanageable.

WARNING
Gaining again access to the equipment will require Factory reprogramming or changing the internal Micocontroller unit.

For practically any parameters that may require some setting in the field, the 2nd level password is enough and may be used for any standard service requirement. The main purpose of the existence of the 3rd level is a security assurance for the user if he loses control on the lower password levels.

Only very few critical parameters, like limiter permission or frequency step control requires this password, as in some countries this functions are not allowed to be freely chosen.

4.5.2.- Factory Default Passwords:

These are the factory default passwords:

Level 1: **P001**
Level 2: **P002**
Level 3: **ABCD**

For what previously said, be sure to change at least the 3rd and possibly the 2nd level as soon as you receive and turn on the equipment.

For security purpose the 3rd level password may be factory changed from the default value before the transmitter is shipped, in consequence of a specific final customer request.

4.5.3.- Menu & Commands Description:

The hierarchical tree of the menu is depicted in the following Figure # 13 at next page, with a small number near the left side of each field for easy reference. In the following pages we will examine each menu field and option.

All of the first column fields require the first level password authorization to be navigated. In a similar way, practically all the second column fields require the second level authorization, as some in the third column. The third level is required only by some functions in this last column. Navigation through the menu screens is quite straightforward and natural, with the direction key. "Up" and "Down" keys vertically scrolling the screens, while the "Left" and "Right" keys horizontally scrolls the menu.

Moving to the right may be impeded by the password permission, while returning to left is always possible.

The "ENTER" key changes from scrolling to programming mode, if allowed in the field. Another push on the "ENTER" key will confirm the input data. When in program mode, the up and down keys will change the character, while the left and right key will move the cursor on the field.

Pushing on the "ESCAPE" key will abort the input while repeated escape commands will reset the menu screen to the default one (#00).

A local input time-out will automatically escape the command mode resetting input data if this is not confirmed in 60 seconds after the last variation.

Few minutes of tests will enable most users to gain confidence with control keys and menu and to be able to access to all main feature of the transmitter, without any previous training.

Anyway it is impossible to discover hidden functions without the proper password permission.

4.5.3.1.- Start menu:

The start menu screen is the unnumbered one on the top of the menu tree. It is shown only when the equipment is turned on from mains or software reset. It will show the software version and the initialization step, when all the LEDs and the display will be turned on and off for testing purpose. Any subsequent key input will turn this menu field on the next, requesting a password code.

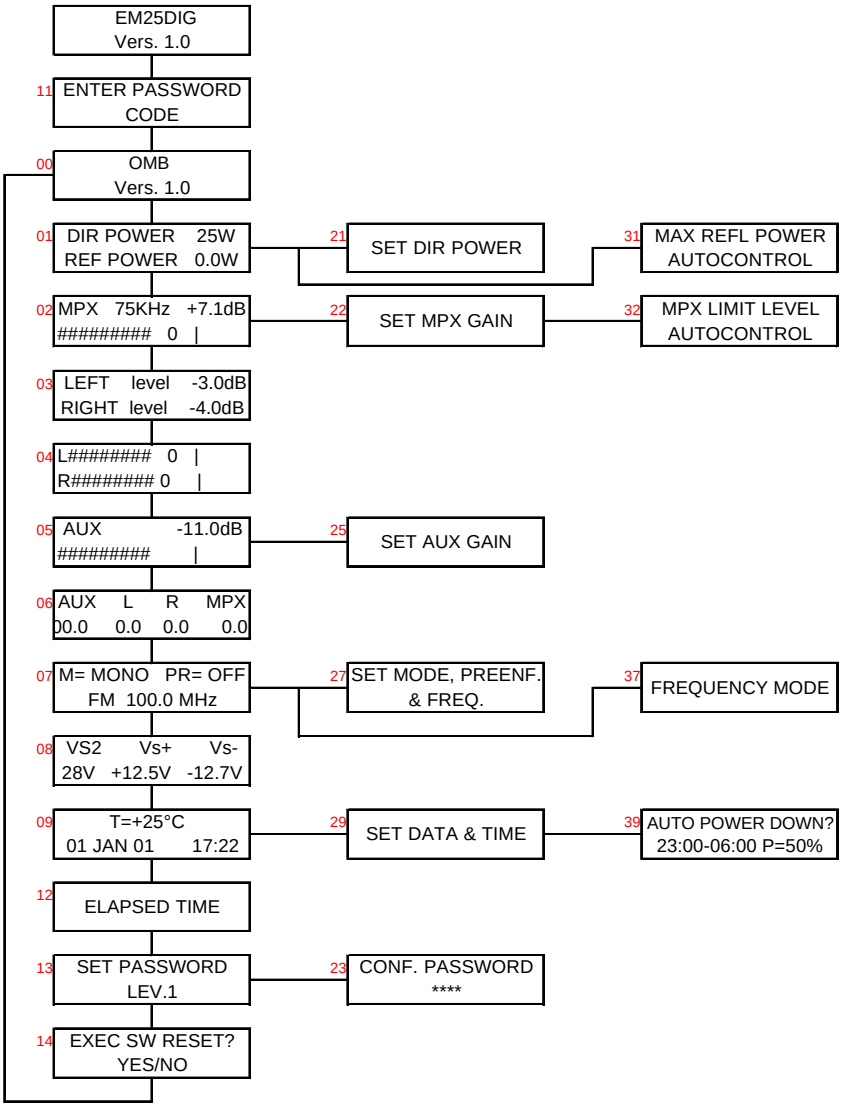

Fig. # 13. HIERARCHICAL TREE OF COMMANDS & SUPERVISION MODES MAIN MENU.

4.5.3.2.- Menu # 11: Initial Password

Fig. # 14. INITIAL PASSWORD MENU (No. 11)

This screen requests to input a valid password code. When the input is confirmed by the "ENTER" key, the word will be compared with the memorized passwords and, if recognized, the corresponding security level will be allowed. If the password is incorrect or the input is terminated by an "ESCAPE", the password will be signalized as invalid and the security level allowed will be as actually in memory, i.e. 0 (no permission at all), 1 or 2.

If the security level is already pre-set to "off" for the 1st level and "on" for the 2nd one, as usual, there is no need to input any password to freely navigate in the menu tree without altering any parameter.

When the password is recognized as valid and the corresponding level is displayed, press on "ESCAPE" key will turn on the default menu field # 00.

4.5.3.3.- Menu # 00: Default Message

Fig. # 15. DEFAULT MESSAGE MENU (No. 00)

This screen shows the default message and the software release. It is the field that will be initially set, or to which it will return back after repeated escape commands.

If authorized by the 3rd level permission, going in the command mode (inputting "ENTER") will permit to edit the first row of this field with a custom message e.g. the following organization name:

Fig. # 16. DEFAULT MESSAGE EDITED BY USER. (No. 00')

4.5.3.4.- Menu # 01: Direct & Reflected Power

Fig. # 17. FORWARD AND REFLECTED POWER MENU (No. 01)

This screen shows the direct and reflected power actually delivered. Going in the command mode, with the 2nd level password authorization, will permit to set a new direct RF output power. See menu # 21.

4.5.3.5.- Menu # 02: Multiplex Signal Level (Output Modulation)

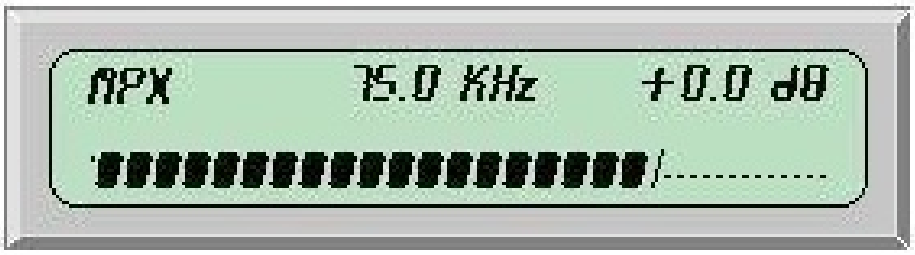

Fig. # 18. MULTIPLEX BASEBAND LEVEL MENU (No. 02)

This screen shows the actual peak modulation in dB referred to 75kHz and as deviation in kHz. A pseudo-analog moving bar contemporary fast changes with the modulation, leaving a peak mark at its end for 1 or 2 seconds. A vertical bar (|) on this line marks the 0 dB position.

Command mode, with the 2nd level password authorization, permits to set LF input channel sensitivity. See Menu # 22.

Right key, with the 3rd level password authorization, permits to access to limiter setup and threshold.See Menu # 32.

4.5.3.6.- Menu # 03: Left & Right Signal Level in dB

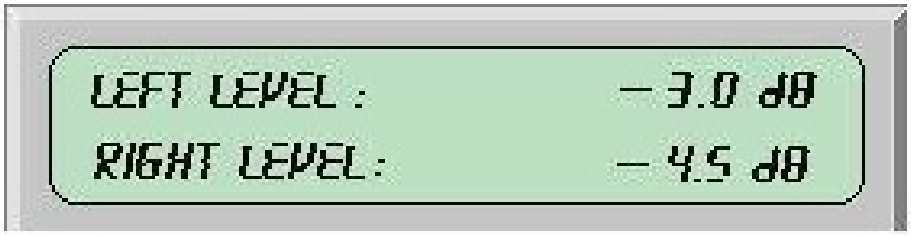

Fig. # 19. STEREO CHANNELS INPUT LEVEL . INTERNAL ENCODER. (No. 03)

This screen shows the actual left and right peak modulation in dB referred to 75kHz. The reading is adequately

accurate with real audio signals. Some steady state test tone especially at very low audio frequency may beat with the discrete ADC conversion sometimes producing reading uncertainty. In this case the MPX level reading will anyway produce correct overall modulation measure.

4.5.3.7.- Menu # 04: Left & Right Signal Levels Seen as Analog Moving Bar

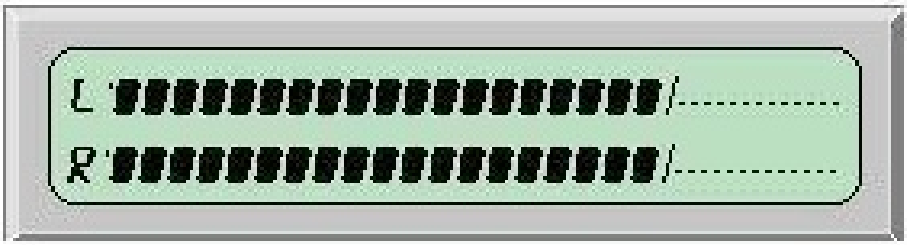

Fig. # 20. STEREO CHANNELS INPUT LEVEL. INTERNAL ENCODER. (No. 04)

This screen shows the actual left and right peak modulation as two moving bars. A vertical line marks 0dB position and the same considerations as the previous menu are still valid.

4.5.3.8.- Menu # 05: Auxiliary Signal Modulation Level (SCA, RDS)

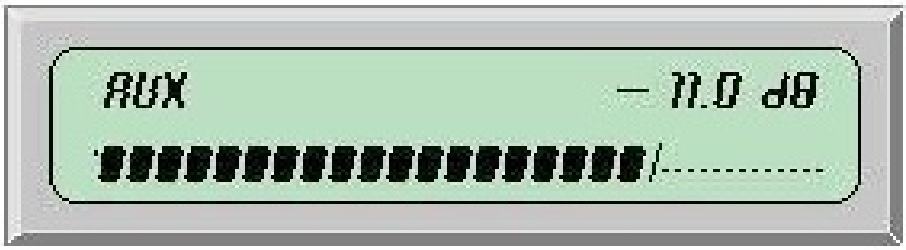

Fig. # 21. AUXILIARY SIGNAL MODULATION LEVEL (No. 05)

This screen shows the actual modulation due to an auxiliary (SCA, RDS) signal in dB referred to 7.5kHz or 10% of max peak modulation. Usual level for SCA signal is 0dB (7.5kHz) while a standard RDS modulation is set at -11.5dB (2kHz).

Command mode, with the 2nd level password authorization, permits to set auxiliary input channel sensitivity. See menu # 25.

4.5.3.9.- Menu # 06: Aux, Left, Right and Mpx level in dB

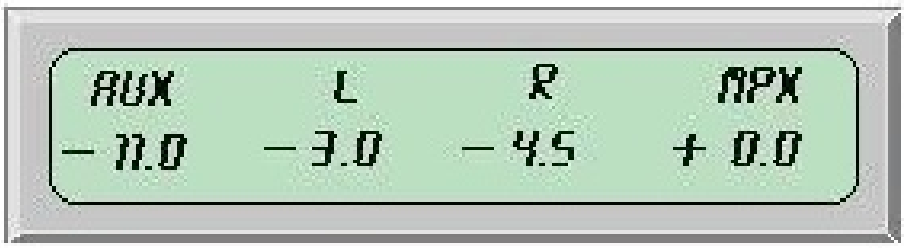

Fig. # 22. MODULATION SUMMARY DISPLAY MENU. (No. 06)

This screen contemporary summarizes the actual modulation in dB due auxiliary, left, right and multiplex signal as seen in their own menu screens.

4.5.3.10.- Menu # 07: Transmission Modes and Frequency

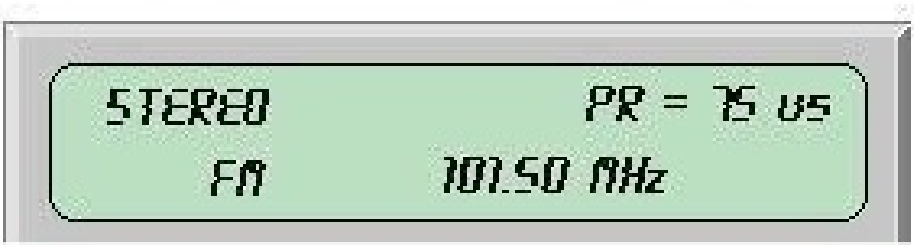

Fig. # 23. TRANSMISSION MODES AND FREQUENCY MENU. (No. 07)

This screen shows the transmission mode, i.e. "MONO R", "STEREO", "MONO L+R", "EXT MPX". It also displays the preemphasis constant time and the transmission frequency.

Entering in command mode, with the 2nd level password authorization, permits to set every of this transmission parameters. See menu # 27.

Only 3rd level authorization permits, pressing "Right" key, to change the frequency variation between 10 and 100kHz / step. See menu # 37.

4.5.3.11.- Menu # 08: Internal Voltages

Fig. # 24. INTERNAL POWER SUPPLY VOLTAGES MENU. (No. 08)

This screen shows the internal regulated voltages. In the EM-25 DIG they are +28 ±0.8V, +12.5 ±0.3V, -13.0 ±1.0V. A marked difference from these values, especially regarding VS2, may indicate misfunctioning or very low mains voltage.

4.5.3.12.- Menu # 09: Temperature, Data and Clock

Fig. # 25. TEMPERATURE, DATE & TIME MENU. (No. 09)

This screen shows the internal temperature, the actual data and clock. To set data and clock it is required to go in command mode, with the 2nd level password authorisation. See Menu # 29.

The temperature sensor is optional and, when present, in the case of EM-25 DIG reads the internal temperature slightly behind the front panel. It is usual it reads some 20 °C higher than external ambient temperature at full output power: i.e. some +65 °C assuming an external temperature of +45 °C (the maximum allowed).

4.5.3.13.- Menu # 12: Elapsed Time

Fig. # 26. ELAPSED OPERATION TIME. (No. 12)

This screen shows the elapsed time whether the exciter is on the air or in stand-by with the mains applied. There is no way to change the reading.

4.5.3.14.- Menu #13: Password Management

Fig. # 27. PASSWORD MANAGEMENT MENU. (No. 13)

This screen shows the password status and permits to change the code and/or the status in command mode, when in possession of the necessary level authorization. No code is ever shown and no access is permitted to a level higher than the current authorization.

If the code or the status is changed, it is always required to confirm the correct password for that level. If the password is unknown, lost or tamperers changed it, it is possible to change status and code when in possession of the higher password. In this case the lower level password code must be changed and confirmed: no possibility still being to know what was the old password.

In case a lower password permission is actually set in regard to the needed action, it is possible to input the higher level password either performing a software reset, if permitted, or turning off and on the mains voltage through the rear mains switch or an external switch.

The 3rd level authorization, when set, will stay valid only till a display time-out is performed, i.e. usually 3 minutes after the last command. Simply navigating through the menu or performing some action will prolong the time-out.

If the password status is set to on for the level 1, a hung-up may follow after the time-out. This may be intentional to prevent unauthorized people from browsing the exciter parameters. Exciter performance will be unaffected by this condition. Any attempt to access the exciter will cause the password request: if an invalid password in entered, it needs to wait for the time-out to permit a new attempt or to remove the mains power to the equipment, causing a hardware reset. Even in this case, the first request will be a valid password input.

4.5.3.15.- Menu #14: Software Reset

Fig. # 28. SOFTWARE RESET REQUEST MENU. (No. 14)

This screen permits to execute a software reset if in possession at least of level 1 password authorization. The main purpose of this reset is permitting to input a new password level; its action is similar to turning off and on the mains to the equipment. A software reset will lead to a small interruption of the RF output power which will be re-established in few seconds, while lock on frequency will not be lost. No transmission or sensitivity parameter is lost in consequence of software or hardware reset.

4.5.3.16.- Menu # 21: Output Power Set

Fig. # 29. OUTPUT R.F. POWER SET MENU. (No. 21)

This screen derives from #01, in command mode. The direct power value blinks and acting on up and down keys the numeric value varies. The output power will vary in real time. Confirming the final value with an "ENTER" will write the new setting in the non-volatile memory of the equipment. Escaping will abort the change. A local time-out will automatically escape the input if not confirmed in 30s from the last change.

4.5.3.17.- Menu # 22: Multiplex, Left & Right Input Level Set

Fig. # 30. STEREO CHANNELS & BASEBAND LEVELS ADJUST MENU. (No. 22)

This screen in command mode, with the 2nd level password authorization, permits to set LF input channels sensitivity, i.e. multiplex, left and right channel. Take present that multiplex and left signals share the same channel and the sensitivity is set to the same value for both left (or multiplex) and right channel, with a differential error <0.2dB at any level. Allowed range is -3.5 ÷ +12.5 dBm.

The first line of the display shows the actual modulation, while the bottom line shows the input level for 100% modulation. Increasing the input level will accordingly decrease the modulation.

4.5.3.18.- Menu # 23: Password Confirmation

Fig. # 31. PASSWORD CONFIRMATION MENU. (No. 23)

This screen is displayed when password code or mode is changed on menu # 13. It requires inputting the same password code as in the current level which is to be changed. Failure to do so will show the message:

Fig. # 32. PASSWORD CONFIRMATION ERROR MENU. (No. 23')

This display stops input mode for 5 second and than permits to exit (and possibly to try again) with the escape key.

4.5.3.19.- Menu # 25: Auxiliary channel Input Level Set

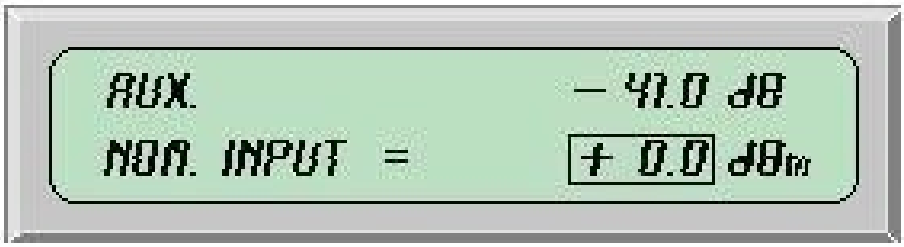

Fig. # 33. AUXILIARY CHANNEL INPUT LEVEL SET MENU. (No. 25)

This screen in command mode, with the 2nd level password authorization, permits to set the auxiliary channels input sensitivity. Allowed range is -12 ÷ +4 dBm to produce 10% modulation, i.e. 7.5kHz deviation or 0dB in the upper line of the display.

4.5.3.20.- Menu # 27: Operation Mode, Preemphasis and Frequency Set

Fig. # 34. OPERATION MODE, PREEMPHASIS AND FREQUENCY SET MENU. (No. 27)

In this screen it is possible to set the transmission "modes" (MONO R, STEREO, MONO L+R, EXT MPX), the preemphasis time constant (0, 25, 50 & 75 ms) and the frequency in step of 10 or 100kHz as preset on the menu # 37. To access to this last menu, the 3rd authorization level is required, from the main frequency menu # 07.

Left and right keys change the input fields whilst the up and down keys change the various options or increase/decrease the frequency.

4.5.3.21.- Menu #29: Data and Time Set

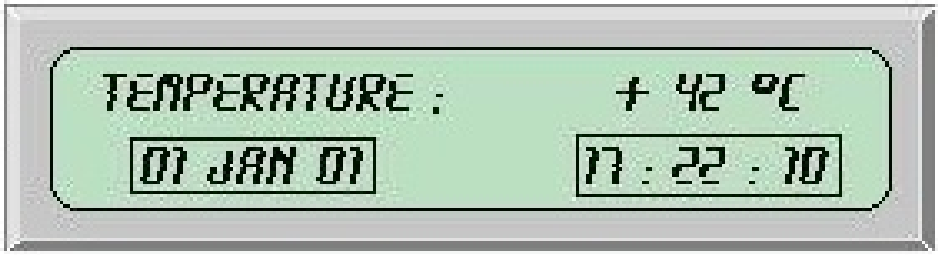

Fig. # 35. DATE & TIME SET MENU. (No. 29)

This screen is the command mode display of menu # 09, with the 2nd level password authorization and permits to set correct data and time.

As in the last menu, the left and right keys change the input fields while the up and down keys increase/decrease the date and time.

4.5.3.22.- Menu # 31: Maximum Reflected Power Set

Fig. # 36. MAXIMUM REFLECTED POWER SET MENU.(No. 31)

This screen permits to set the maximum reflected power level. Default value is 3.0W and in any case this power is hardware limited to 4 o 5W for security reason.

Auto Control on the lower line is not operative and could be absent in other software releases.

4.5.3.23.- Menu # 32: Limiter Set

Fig. # 37. LIMITER SET MENU. (No. 32)

This screen, with the 3rd level authorization, permits to set the limiter action. The right/left keys toggle limiter on and off. The up/down keys vary the threshold level.

Auto Control on the lower line is not operative in some software releases. When it is, it will dynamically reduce the input sensitivity to allow distorsionless limiting if pre-set to ON. Even in this case it will be wise not to exceed the limiter threshold to avoid "pumping" effect on the modulation.

4.5.3.24.- Menu # 37: Frequency Change Mode

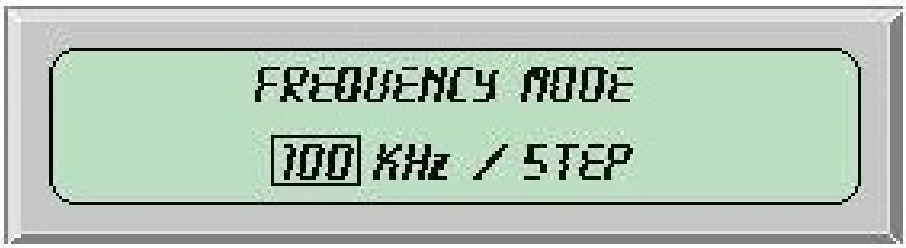

Fig. # 38. FREQUENCY CHANGE MODE MENU.(No. 37)

This screen, with the 3rd level authorization, permits to set the frequency step variation between 100 and 10kHz.

4.5.3.25.- Menu # 39: Power-Down Setup

Fig. # 39. POWER-DOWN MODE PROGRAMMING SETUP MENU. (No. 39)

This screen, with the 2nd level authorization, allows to preset the "power-down" mode. If this mode is on, the output power will be automatically decreased to the pre-set percentage in the time period set on the bottom line.

The scaled power is approximate and must be tested and/or adjusted before final setup, if critical.

4.6.- SERVICE AND MAINTENANCE.

Since the EM-25 DIG is cooled by natural air convection, it is not subject to clogging by dust. It is very important to install the equipment on a stable stand/rack, in such a way to permit good ventilation to the rear heatsink. If needed it may be externally cleaned with a soft brush and a wet cloth, with the apparatus turned off.

Other than this, because of the high-quality materials used in their manufacture, if it is installed as set forth under “INSTALLATION AND USE,” it will not require special maintenance for quite some time.

After a few years of continuous service, it is recommended that the equipment be overhauled in the factory or in a OMB specialized laboratory, where the characteristics can be checked against the initial ones and re-calibration can be done when needed.

It is especially important that the power supply be overhauled when the exciter have been working at high temperatures, over 30 / 35 °C.

WARNING

Never change the internal calibrations to avoid altering the exciter declared performances.

----------o0o----------

FREQUENCY MODULATION BAND II

MODULATOR / EXCITER

87.5-108.0 MHz

EM-25 DIG

Chapter V.
SCHEMATICS & DIAGRAMS

This Chapter offers a compilation of all Schematics & Components Location Diagrams corresponding to all Units & Boards of EM-25 DIG Modulator/Exciter. We recommend its study together with the reading of Chapter III of this Manual.

Description of all parts & components is given and specified at each particular Schematic Electric Diagram. Hence, it's not required to include an extensive List of Parts in this Manual. All capacitors are specified as 50 vDC, unless otherwise is specified, and resistors are 1/4 watt, metal-film ,5%, unless otherwise is specified. Resistors with thermal dissipations higher than 2 watts are nichrome-type, ceramic-encapsulated.

----------o0o----------

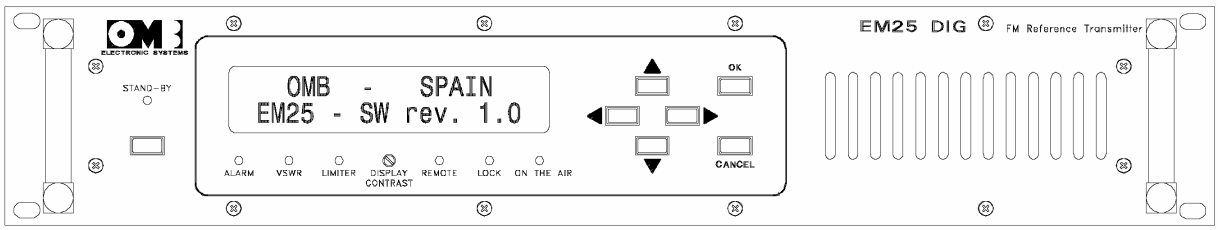

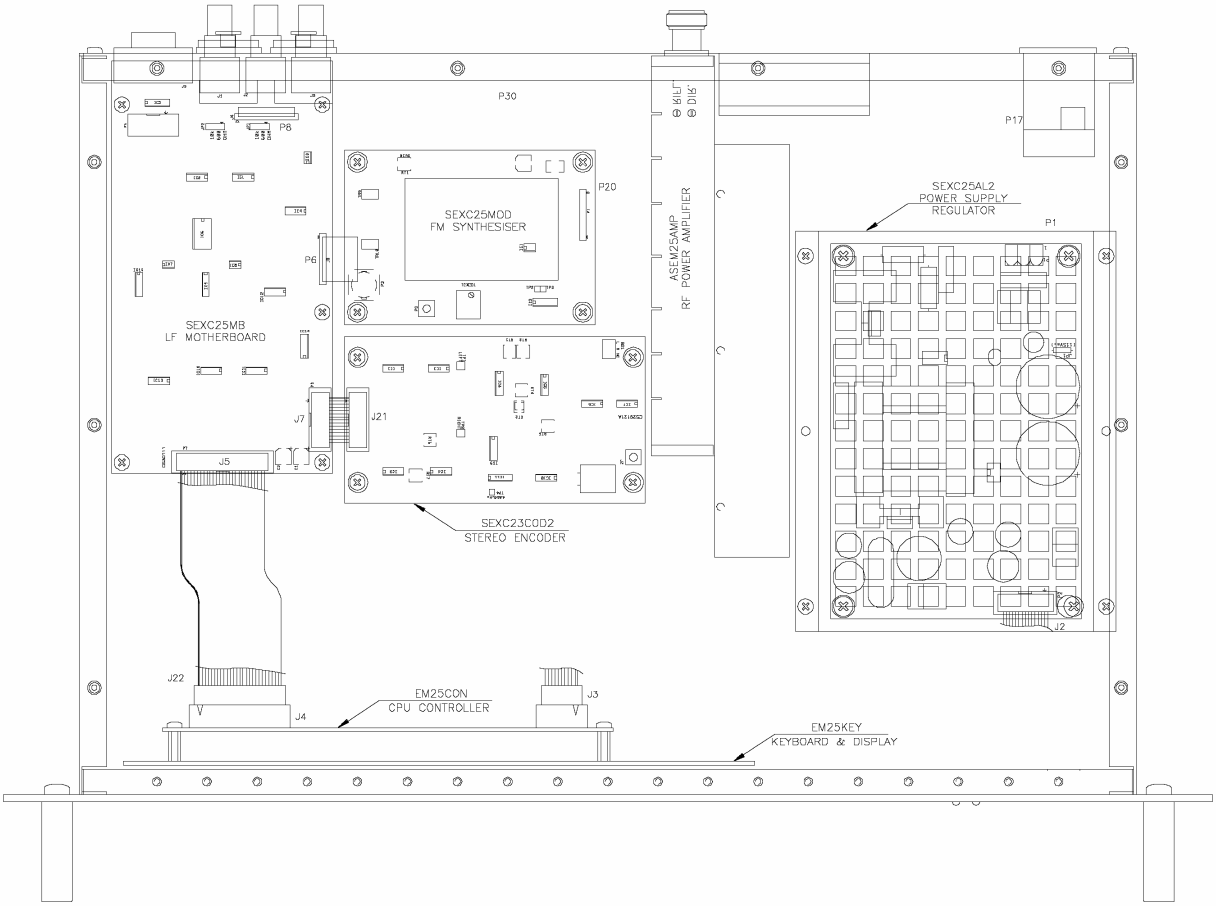

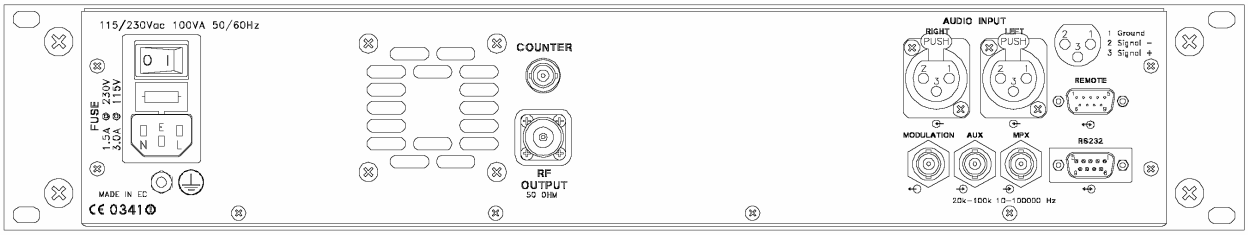

	Date	Name	Signature:
Drawn	01/11/04	OMB Eng. Dpt.	
Checked			
Standards			

Sistemas Electrónicos S.A.

Scale:

Title: EM 25 DIG

Mechanical assembly view

Drawing nr.:

Replace:

Replaced with:

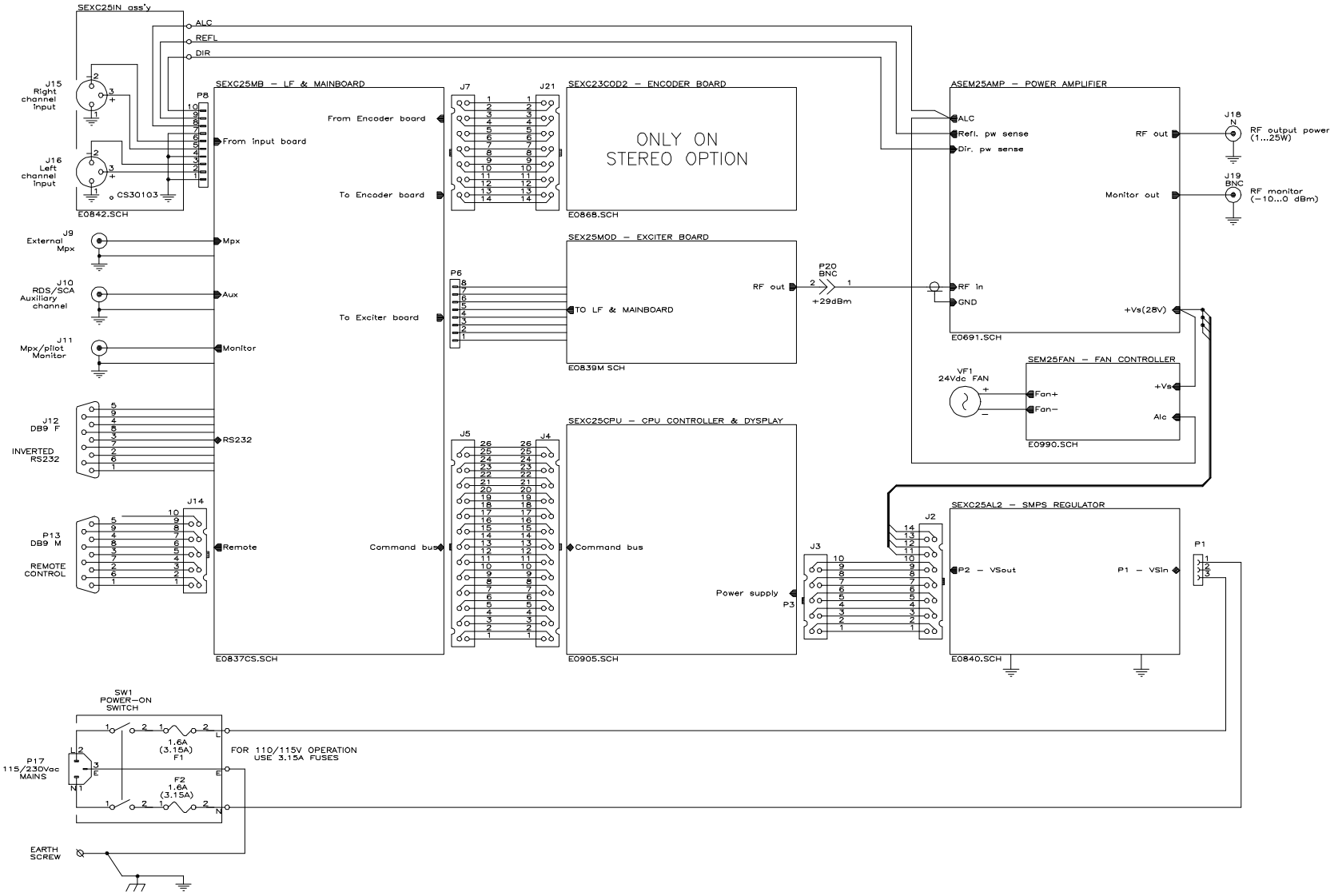

	Date	Name	Signature:
Drawn	01/11/04	OMB Eng. Dpt.	
Checked			
Standards			

Sistemas Electrónicos S.A.

Scale :

Title:

EM 25 DIG

General Wiring Diagram

Drawing nr:

Replace:

Replaced with:

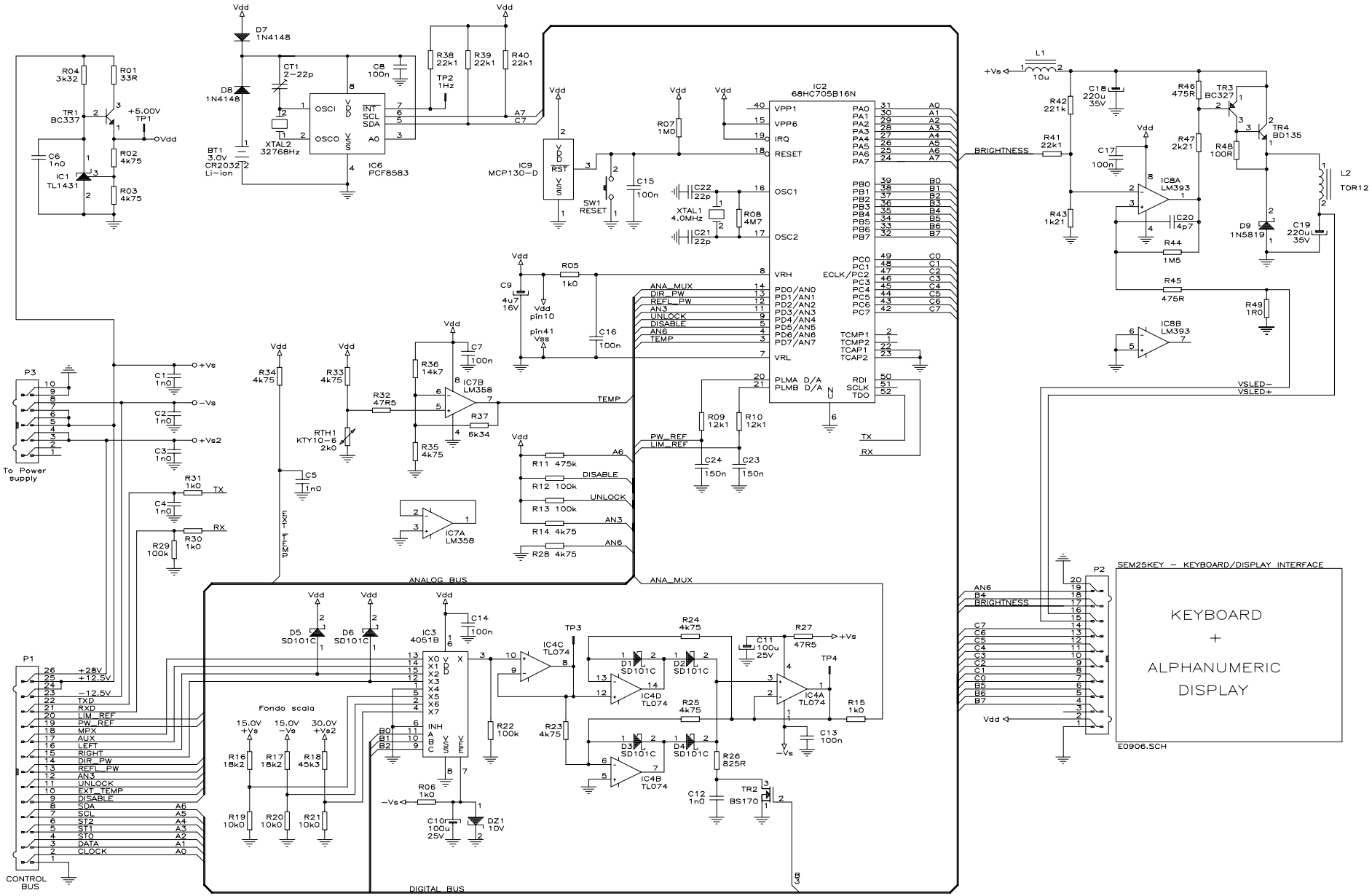

	Date	Name	Signature:
Drawn	18/04/03	OMB Eng. Dpt.	
Checked			
Standards			

Sistemas Electrónicos S.A.

Scale :

Title:

EM 25 DIG

Control unit

Drawing nr:

Replace:

Replaced with:

Component side

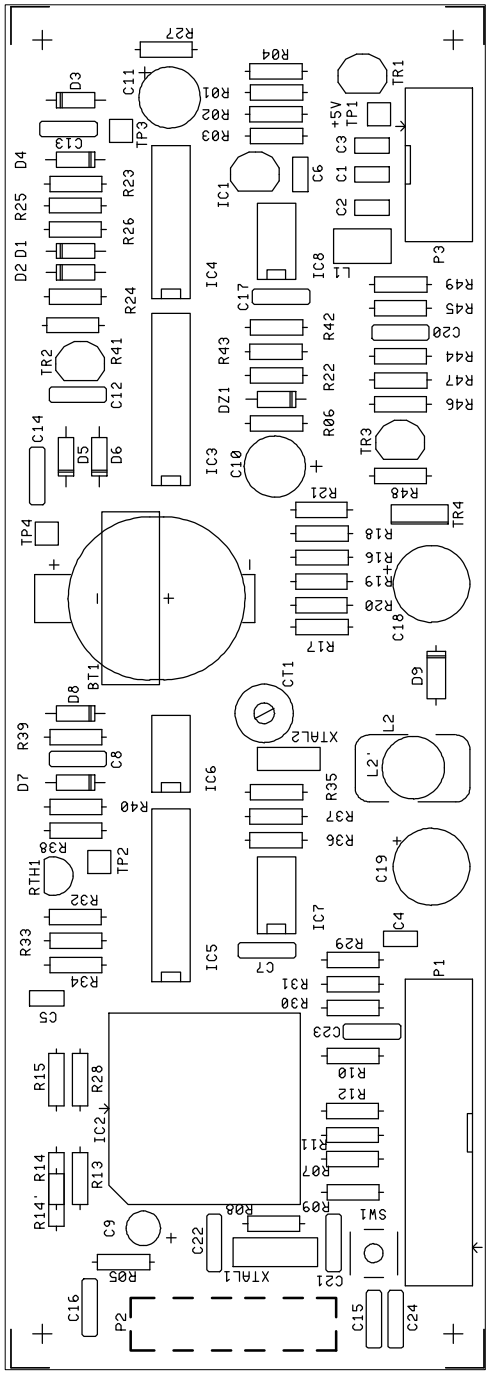

Solder side

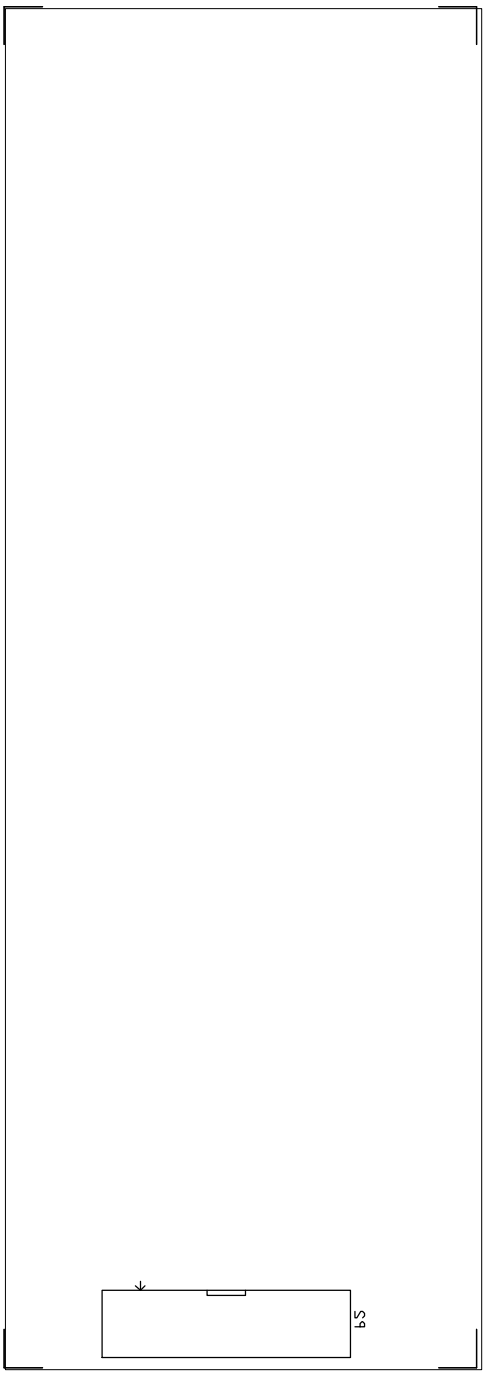

	Date	Name	Signature:	
Drawn	18/04/03	OMB Eng. Dpt.		Sistemas Electrónicos S.A.
Checked				
Standards				
Scale:	Title:	EM 25 DIG Control unit		Drawing nr:
				Replace:
				Replaced with:

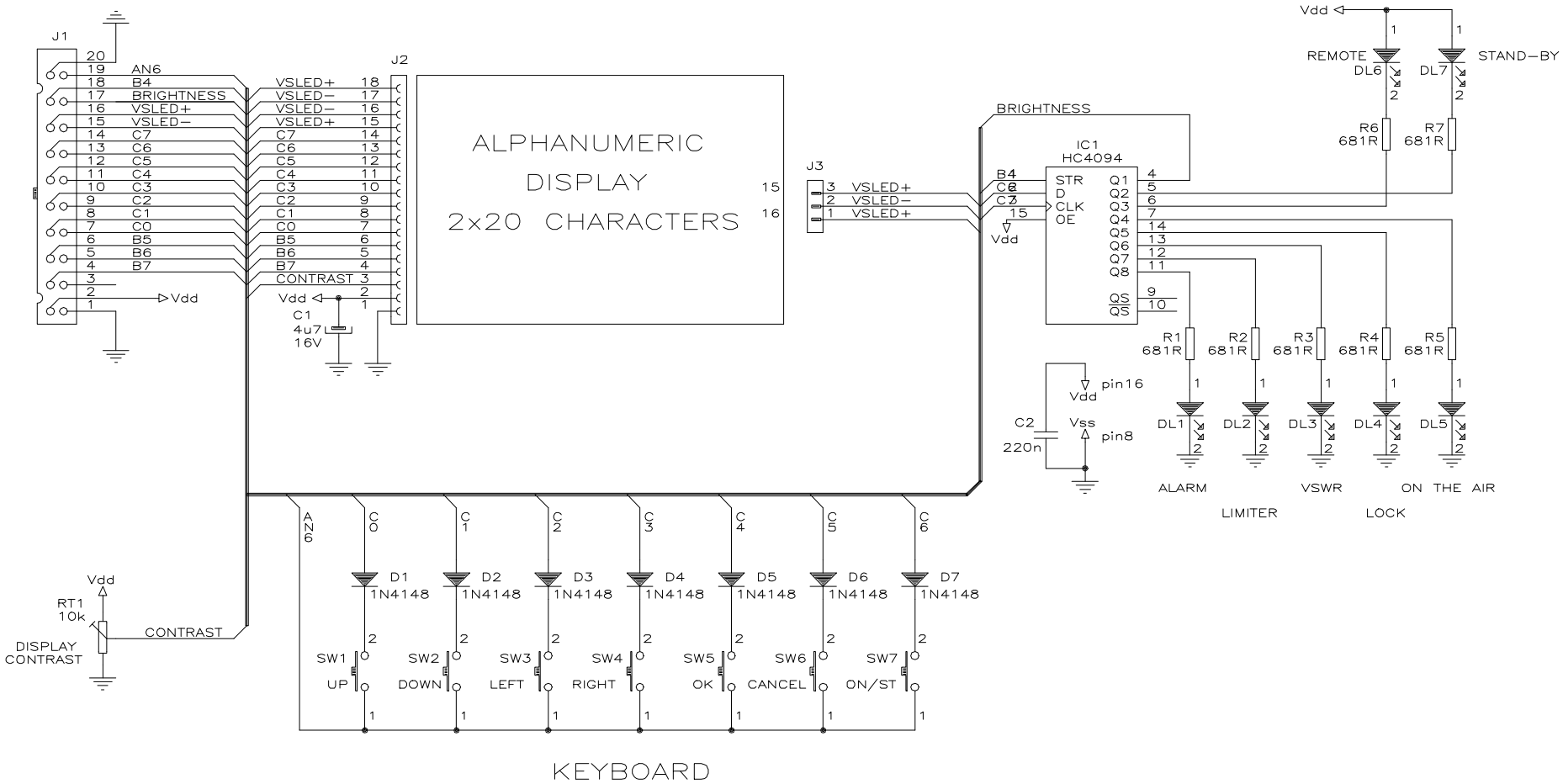

	Date	Name	Signature:
Drawn	16/07/02	OMB Eng. Dpt.	
Checked			
Standards			

Sistemas Electrónicos S.A.

Scale :

Title:

EM 25 DIG

Keyboard / display interface

Drawing nr:

Replace:

Replaced with:

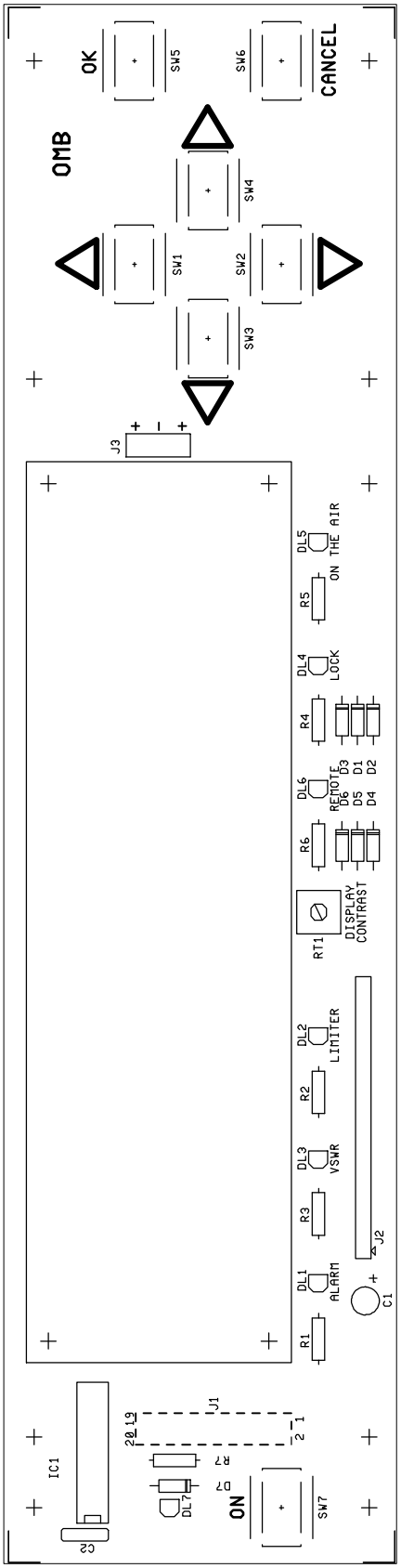

COMPONENT SIDE

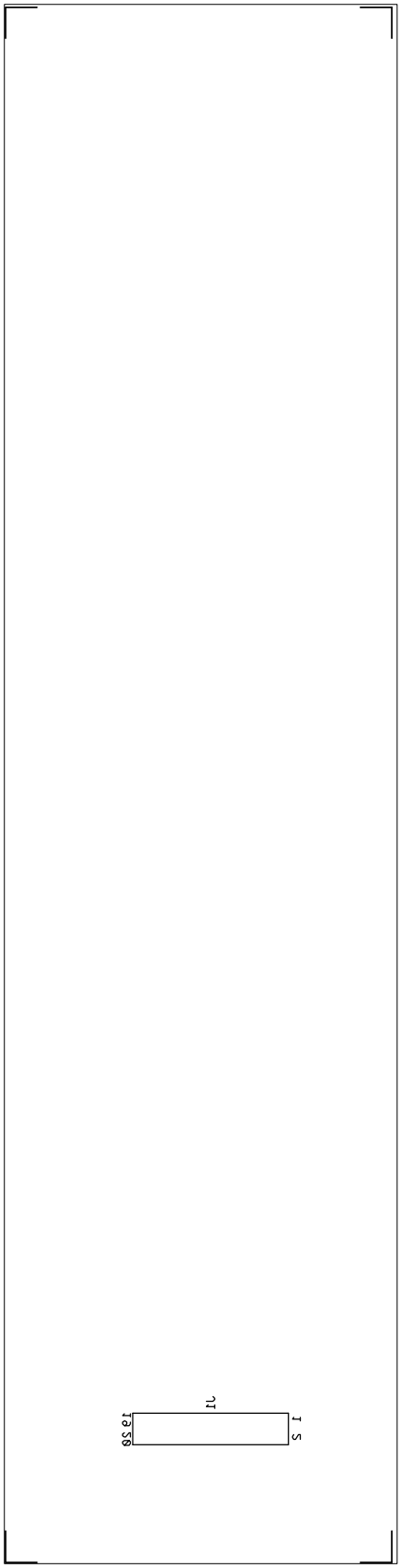

SOLDER SIDE

	Date	Name	Signature:
Drawn	16/07/02	OMB Eng. Dpt.	
Checked			
Standards			

Sistemas Electrónicos S.A.

Scale:

Title: EM 25 DIG

Keyboard / display interface

Drawing nr:

Replace:

Replaced with:

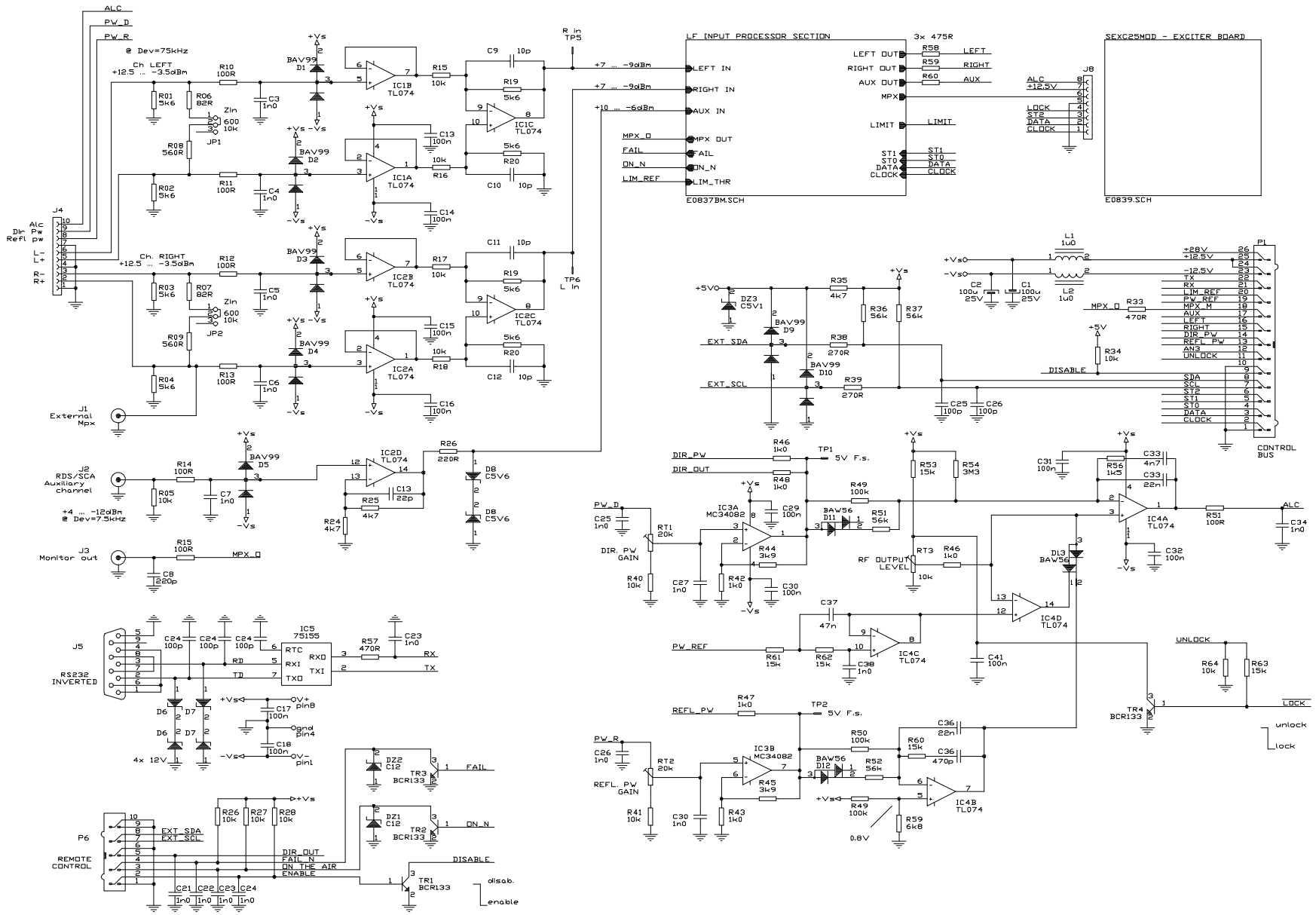

	Date	Name	Signature:
Drawn	01/11/04	OMB Eng. Dpt.	
Checked			
Standards			

Sistemas Electrónicos S.A.

Scale :

Title:

EM 25 DIG

MAINBOARD - I/O & R.F. Control Section

Drawing nr:

Replace:

Replaced with:

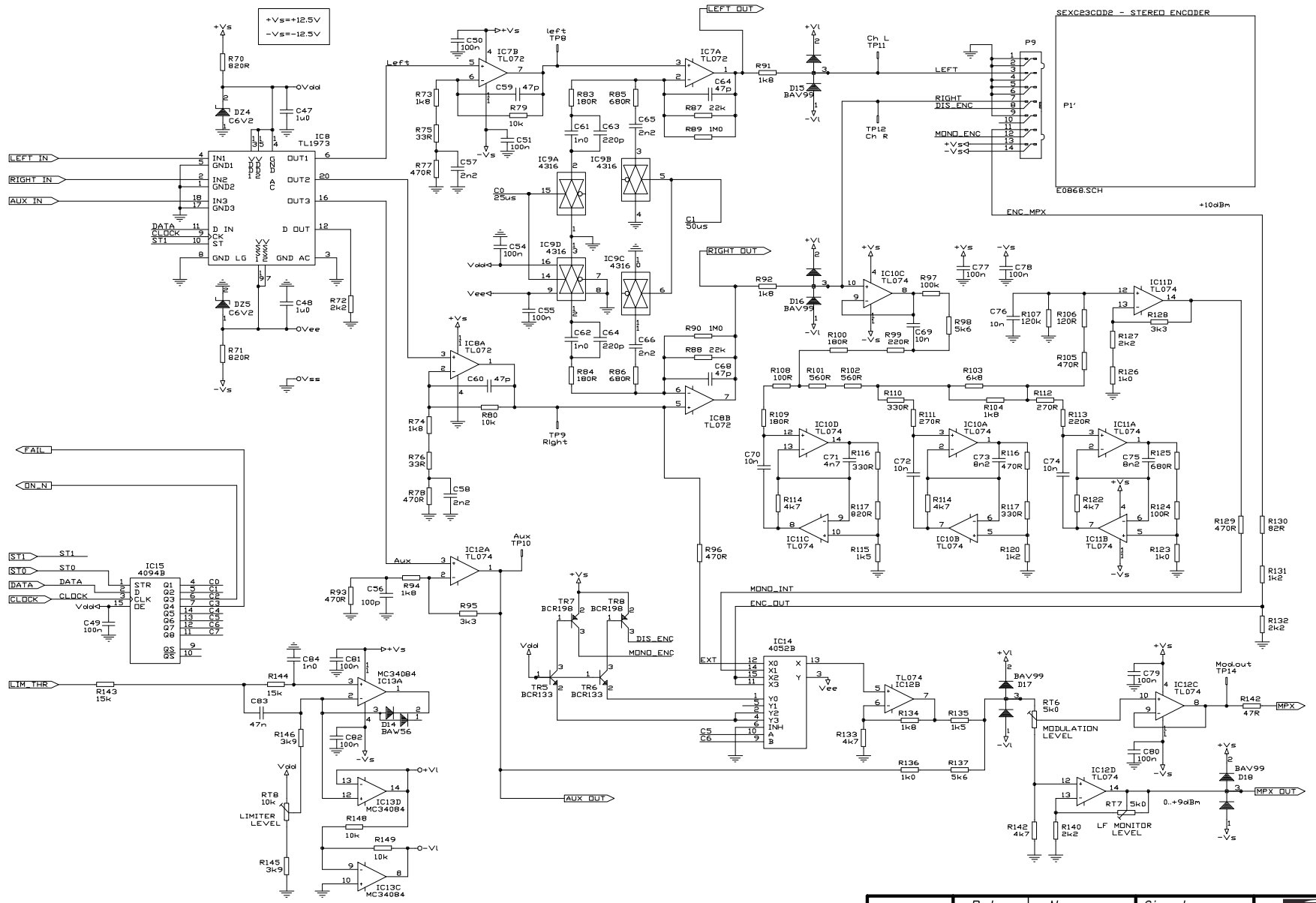

	Date	Name	Signature:
Drawn	101/11/04	OMB Eng. Dpt.	
Checked			
Standards			

Sistemas Electrónicos S.A.

Scale :

Title:

EM 25 DIG

MAINBOARD - LF Process Section

Drawing nr:

Replace:

Replaced with:

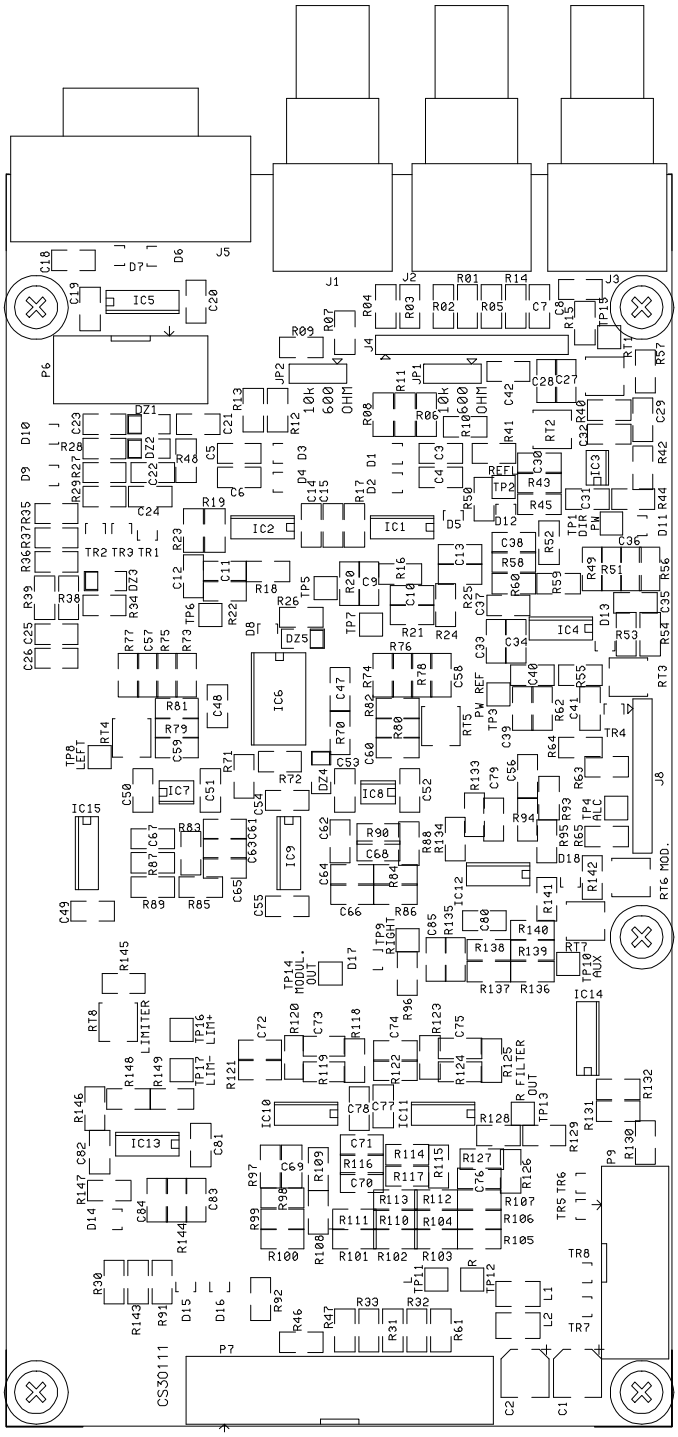

	Date	Name	Signature:
Drawn	01/11/04	OMB Eng. Dpt.	
Checked			
Standards			

Sistemas Electrónicos S.A.

Scale:

Title: EM 25 DIG

Mainboard

Drawing nr:

Replace:

Replaced with:

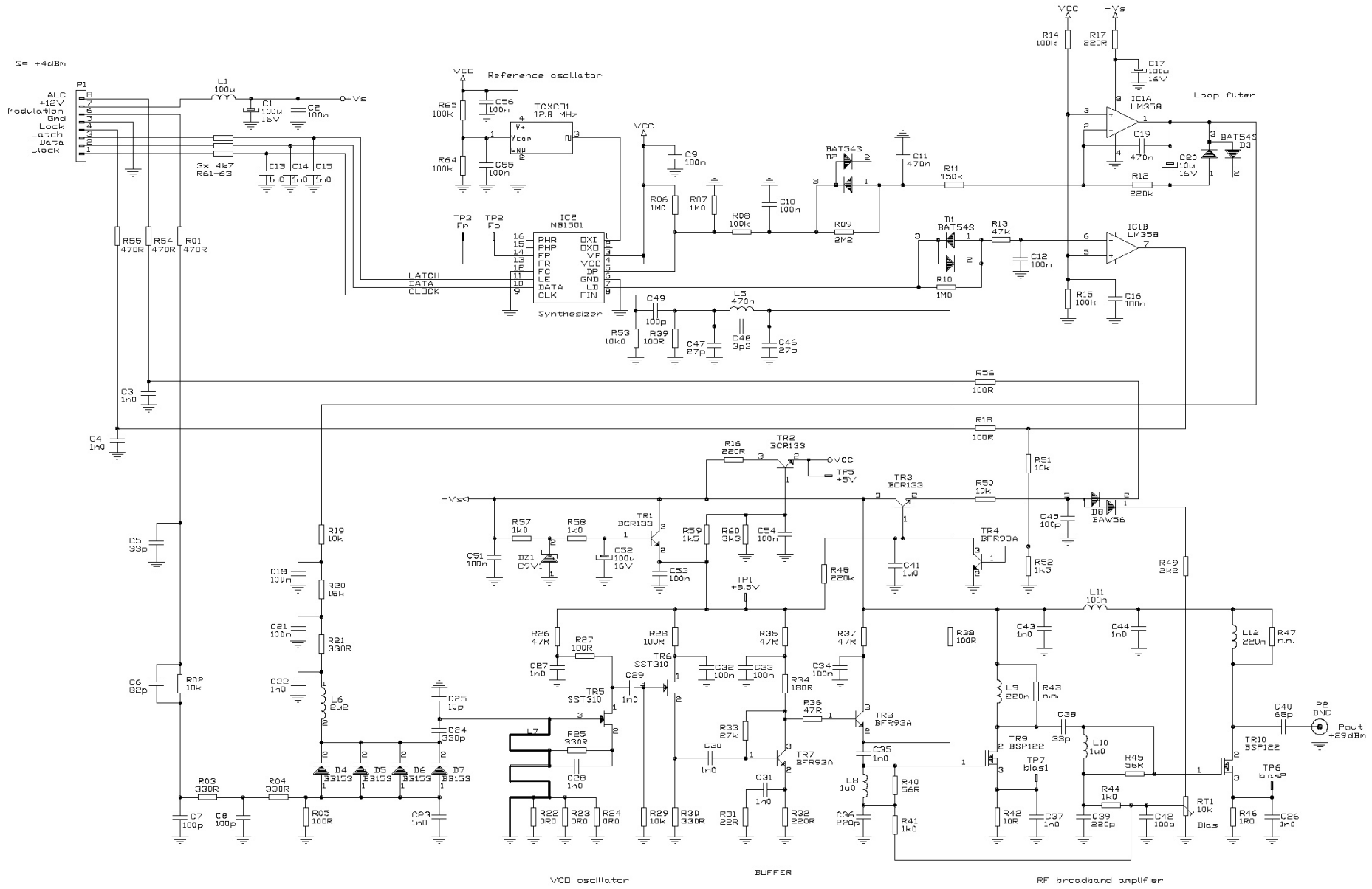

	Date	Name	Signature:
Drawn	01/11/04	OMB Eng. Dpt.	
Checked			
Standards			

Sistemas Electrónicos S.A.

Scale :

Title:

EM 25 DIG

FM Exciter

Drawing nr:

Replace:

Replaced with:

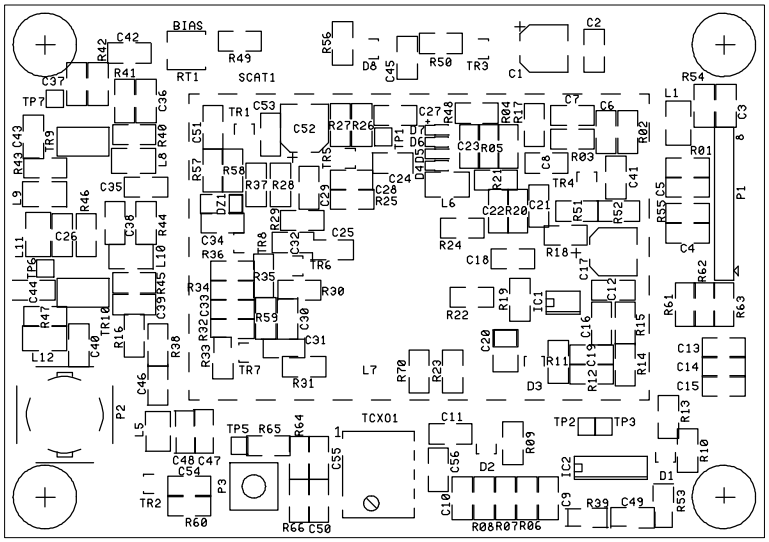

	Date	Name	Signature:
Drawn	01/11/04	OMB Eng. Dpt.	
Checked			
Standards			

Scale:

Title: EM 25 DIG

FM Exciter

Drawing nr:

Replace:

Replaced with:

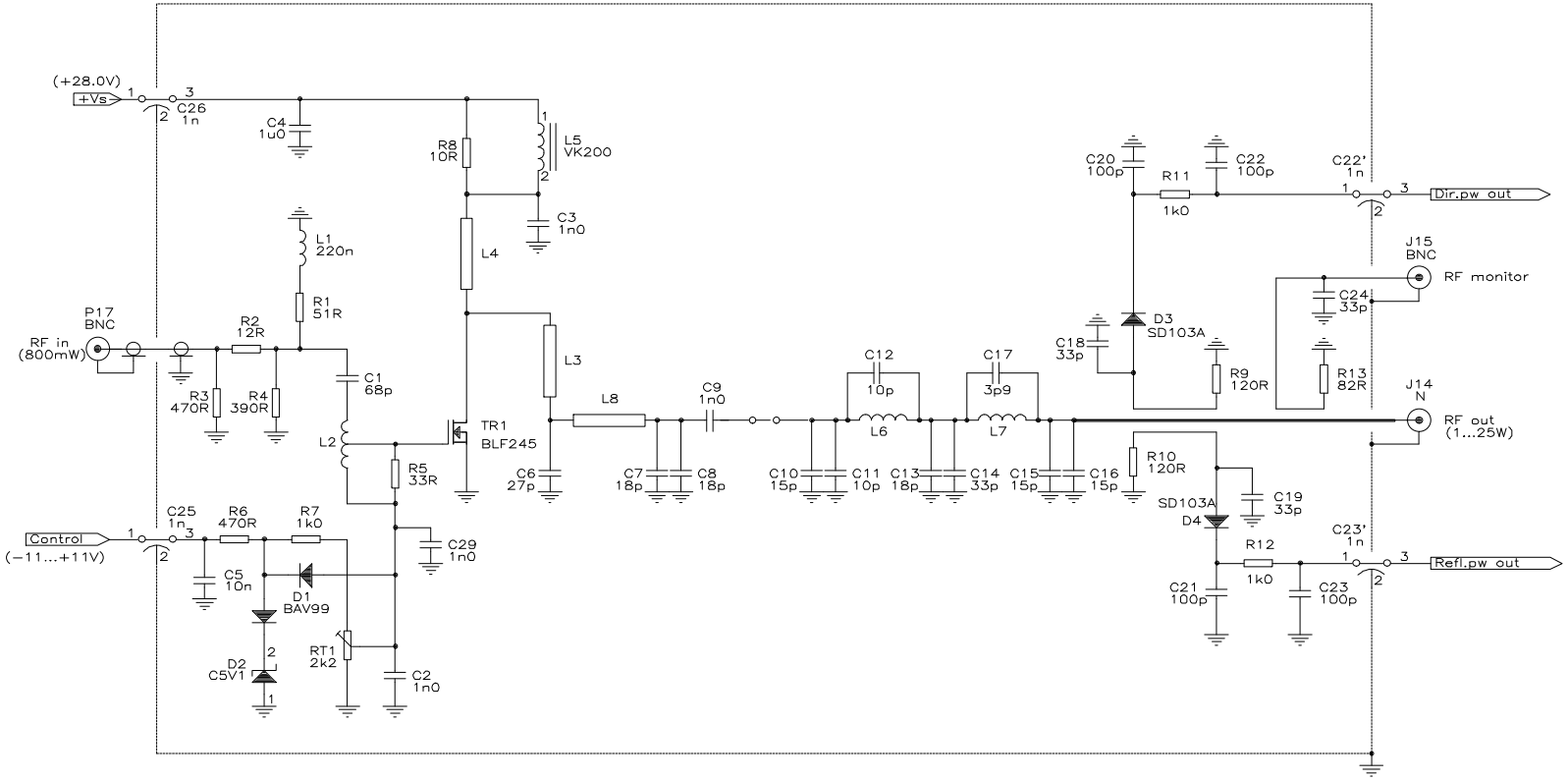

	Date	Name	Signature:
Drawn	01/11/04	OMB Eng. Dpt.	
Checked			
Standards			

Sistemas Electrónicos S.A.

Scale :

Title:

EM 25 DIG

FM 25W Power Amplifier

Drawing nr:

Replace:

Replaced with:

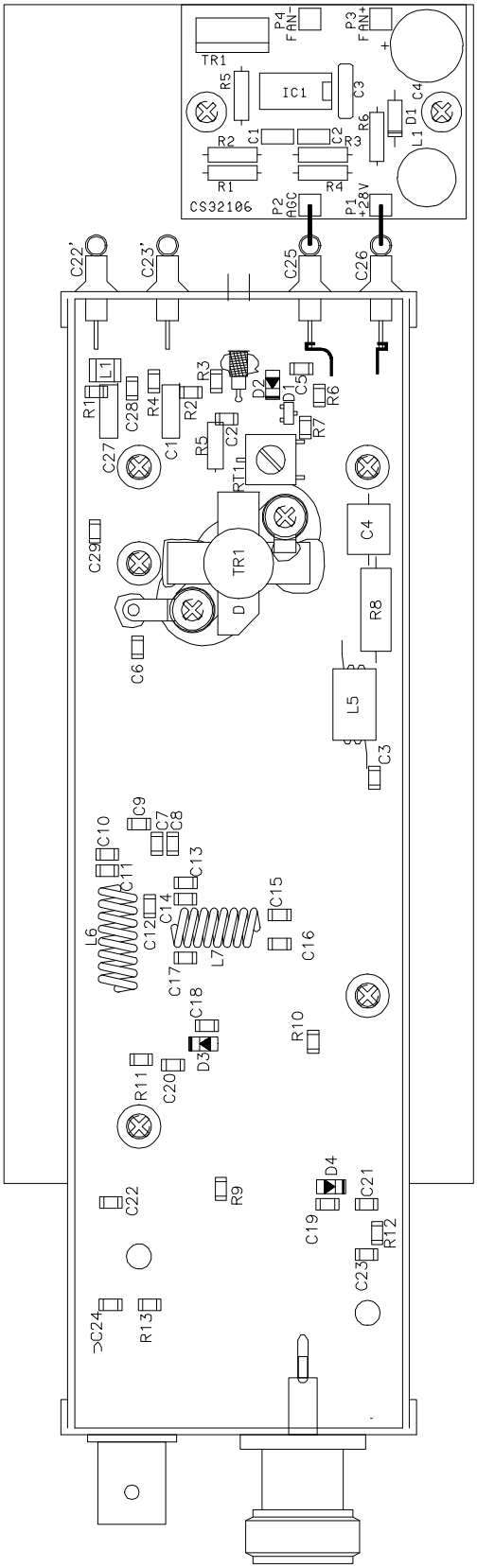

	Date	Name	Signature:
Drawn	01/11/04	OMB Eng. Dpt.	
Checked			
Standards			

Sistemas Electrónicos S.A.

Scale:

Title: EM 25 DIG

FM 25W Power Amplifier

Drawing nr:

Replace:

Replaced with:

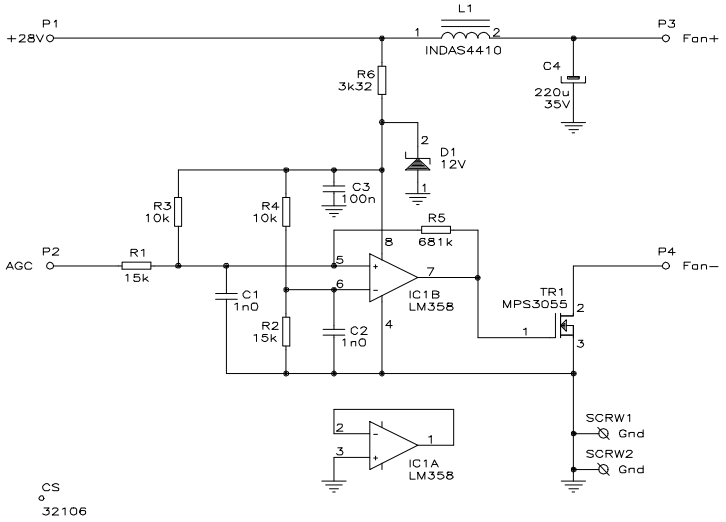

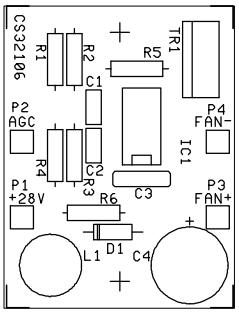

	Date	Name	Signature:
Drawn	01/11/04	OMB Eng. Dpt.	
Checked			
Standards			

Sistemas Electrónicos S.A.

Scale:

Title: EM 25 DIG

Fan controller board

Drawing nr:

Replace:

Replaced with:

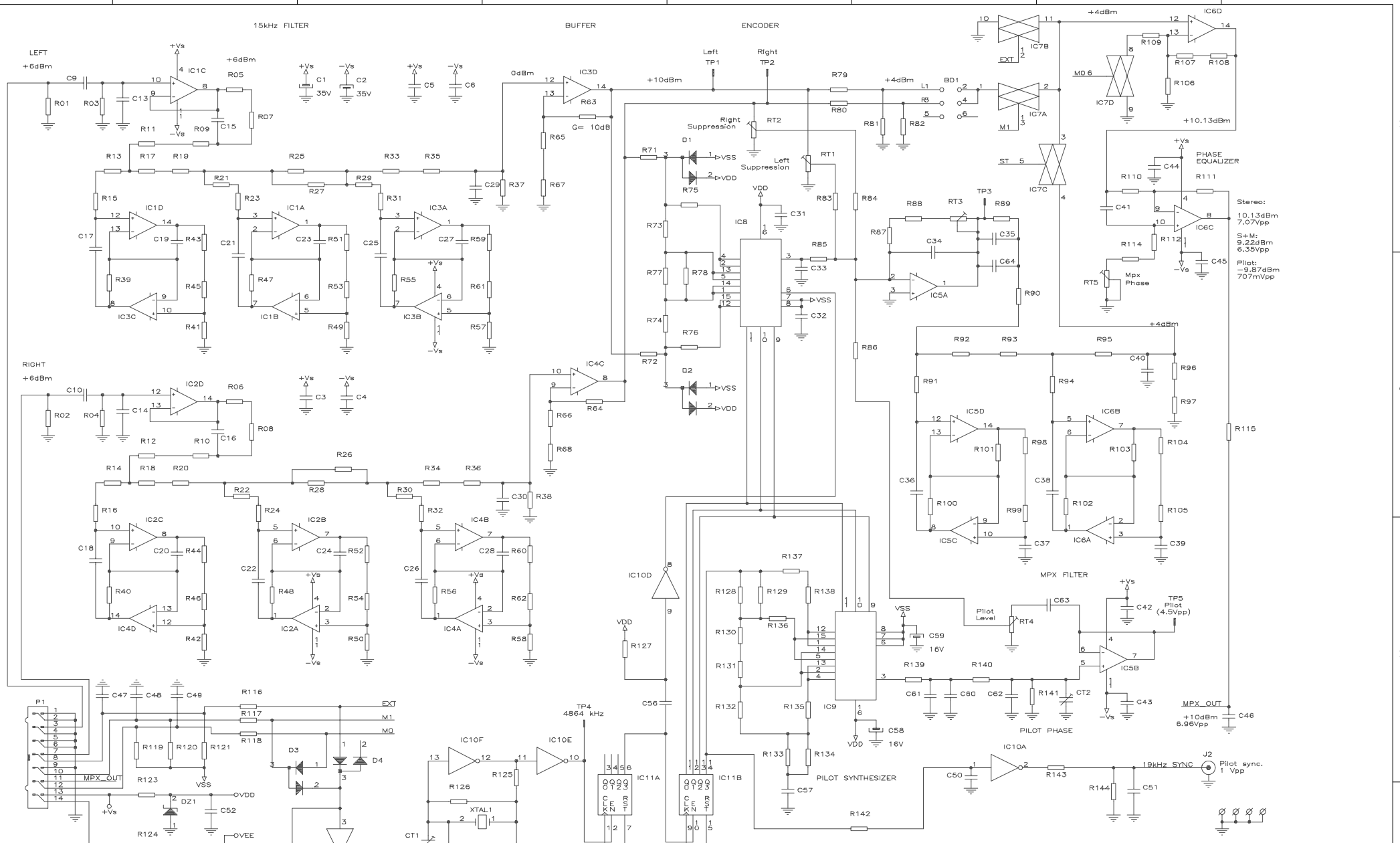

	Date	Name	Signature:
Drawn	01/11/04	OMB Eng. Dpt.	
Checked			
Standards			

Sistemas Electrónicos S.A.

Scale :

Title:

EM 25 DIG

Stereo encoder

Drawing nr:

Replace:

Replaced with:

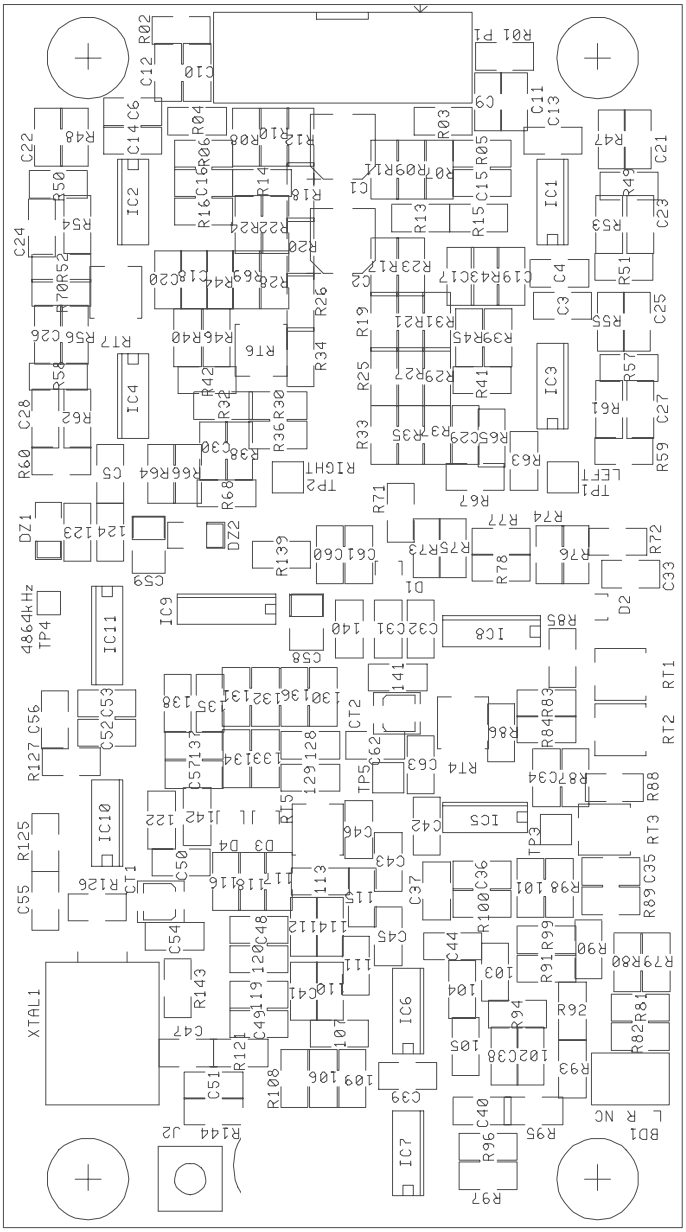

	Date	Name	Signature:
Drawn	01/11/04	OMB Eng. Dpt.	
Checked			
Standards			

Sistemas Electrónicos S.A.

Scale:

Title: EM 25 DIG

Stereo encoder

Drawing nr:

Replace:

Replaced with:

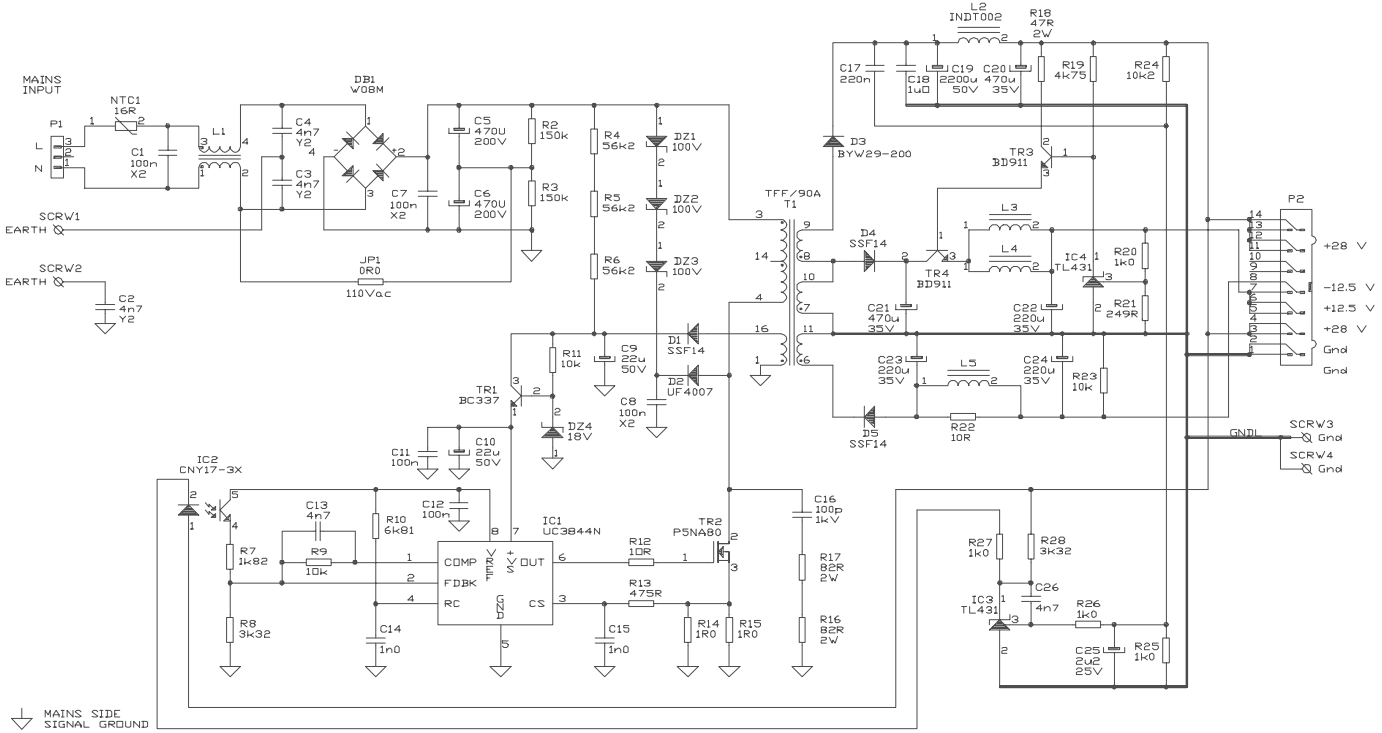

	Date	Name	Signature:
Drawn	01/11/04	OMB Eng. Dpt.	
Checked			
Standards			

Sistemas Electrónicos S.A.

Scale :

Title:

EM 25 DIG

Power Supply Regulator

Drawing nr:

Replace:

Replaced with:

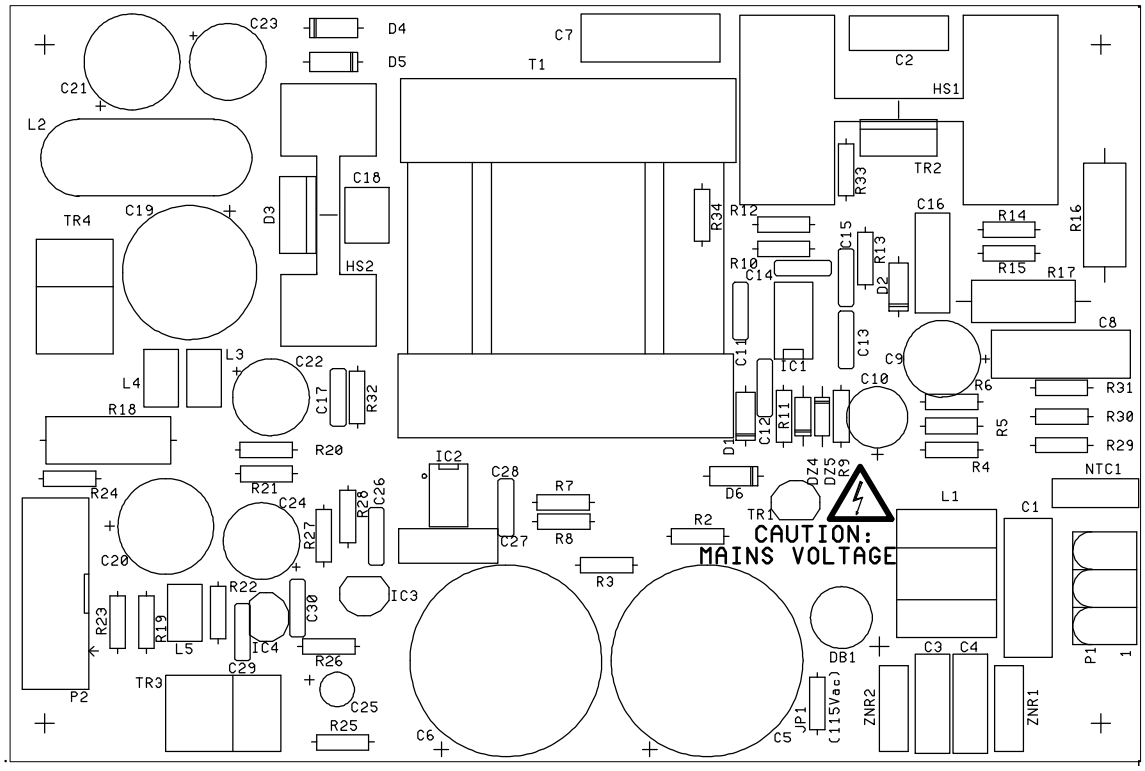

	Fecha	Nombre:	Firma:	
Dibujado	01/11/04	OMB Eng. Dpt.		Sistemas Electrónicos S.A.
Comprobado				
Ids Normas				
Escala:	Título:	EM 25 DIG		Nº Plano:
		Power Supply Regulator		Sustituye a:
				Sustituido por:

INTENTIONALLY BLANK