Test Report
19-1-0130001T13a

DAkkS Deutsche Akkreditierungsstelle
D-PL-12047-01-01
D-PL-12047-01-03
D-PL-12047-01-04

Number of pages:	35	**Date of Report:**	2021-Mar-24
Testing company:	CETECOM GmbH Im Teelbruch 116 45219 Essen Germany Tel. + 49 (0) 20 54 / 95 19-0 Fax: + 49 (0) 20 54 / 95 19-150	**Applicant:**	ORTOVOX Sportartikel GmbH
Product: **Model:**	**Avalanche Transceiver** **DIRACT VOICE**		
FCC ID:	KF5DIR1	**IC:**	26906-DIR1
Testing has been carried out in accordance with:	**Title 47 CFR, Chapter I** **FCC Regulations, Subchapter A** Subpart C: §15.247 (DTS) , **RSS-247, Issue 2 (DTS)** **RSS-Gen., Issue 5** Deviations, modifications or clarifications (if any) to above mentioned documents are written in each section under "Test method and limit".Test method and limit".		
Tested Technology:	BLE		
Test Results:	☒ **The EUT complies with the requirements in respect of all parameters subject to the test.** The test results relate only to devices specified in this document		
Signatures:	Ninovic Perez 2021.03.24 14:24:44 + 01'00'		Digital signiert von: patrick.marzotko@cetecom.com Name: CN = patrick.marzotko@cetecom.com Datum: 2021.03.24 13:23:33 +01'00'
	Dipl.-Ing. Ninovic Perez Test Lab Manager Authorization of test report		Patrick Marzotko Test manager Responsible of test report

Table of Contents

Table of Annex....3
1.1 Disclaimer and Notes....4
1.2 Summary of Test Results....5
1.3 Summary of Test Methods....5
2.1 Identification of the Testing Laboratory....6
2.2 General limits for environmental conditions....6
2.3 Test Laboratories sub-contracted....6
2.4 Organizational Items....6
2.5 Applicant's details....6
2.6 Manufacturer's details....6
2.7 EUT: Type, S/N etc. and short descriptions used in this test report....7
2.8 Auxiliary Equipment (AE): Type, S/N etc. and short descriptions....7
2.9 Connected cables....7
2.10 Software....7
2.11 EUT set-ups....7
2.12 EUT operation modes....7
3.1 General Data of Main EUT as Declared by Applicant....8
3.2 Detailed Technical data of Main EUT as Declared by Applicant....9
3.3 Modifications on Test sample....9
4.1 Duty-Cycle....10
4.2 Peak output power (Sweep)....11
4.3 Power spectral density....13
4.4 Minimum Emission Bandwidth 6 dB....14
4.5 Occupied Channel Bandwidth 99%....15
4.6 Emissions in non-restricted frequency bands....16
4.7 Radiated field strength emissions below 30 MHz....18
4.8 Radiated field strength emissions 30 MHz – 1 GHz....22
4.9 Radiated field strength emissions above 1 GHz....24
4.10 Radiated Band-Edge emissions....26
4.11 AC-Power Lines Conducted Emissions....28
4.12 Results from external laboratory....30
4.13 Opinions and interpretations....30
4.14 List of abbreviations....30

Table of Annex			
Annex No.	**Contents**	**Reference Description**	**Total Pages**
Annex 1	Test result diagrams	**CETECOM_TR19-1-0130001T13a-A1**	52
Annex 2	Internal photographs of EUT	**Please refer to applicant's documentation**	-
Annex 3	External photographs of EUT	**CETECOM_TR19-1-0130001T13a-A3**	9
Annex 4	Test set-up photographs	**CETECOM_TR19-1-0130001T13a-A4**	8
The listed attachments are separate documents.			

-

1 General information

1.1 Disclaimer and Notes

The test results of this test report relate exclusively to the test item specified in this test report as specified in chapter 2.7. CETECOM does not assume responsibility for any conclusions and generalizations drawn from the test results with regard to other specimens or samples of the type of the equipment represented by the test item.
The test report may only be reproduced or published in full. Reproduction or publication of extracts from the report requires the prior written approval of CETECOM.
The testing service provided by CETECOM has been rendered under the current "General Terms and Conditions for CETECOM".
CETECOM will not be liable for any loss or damage resulting from false, inaccurate, inappropriate or incomplete product information provided by the customer.
Under no circumstances does the CETECOM test report include any endorsement or warranty regarding the functionality, quality or performance of any other product or service provided.
Under no circumstances does the CETECOM test report include or imply any product or service warranties from CETECOM, including, without limitation, any implied warranties of merchantability, fitness for purpose, or non-infringement, all of which are expressly disclaimed by CETECOM.
All rights and remedies regarding vendor's products and services for which CETECOM has prepared this test report shall be provided by the party offering such products or services and not by CETECOM.
In no case this test report can be considered as a Letter of Approval.

This test report is electronically signed and valid without handwritten signature. For verification of the electronic signatures, the public keys can be requested at the testing laboratory.

The test report must always be reproduced in full; reproduction of an excerpt only is subject to written approval of the testing laboratory. The documentation of the testing performed on the tested devices is archived for 10 years at CETECOM.

Also we refer on special conditions which the applicant should fulfill according §2.927 to §2.948, special focus regarding modification of the equipment and availability of sample equipment for market surveillance tests.

1.2 Summary of Test Results

The EUT integrates a BLE transmitter. Other implemented wireless technologies were not considered within this test report.

Test case	Reference Clause FCC ☒	Reference Clause ISED ☒	Page	Remark	Result
Duty-Cycle	§15.35(c)	RSS-Gen Issue 5, §8.2	10		PASSED
Minimum Emission Bandwidth 6 dB	§15.247 5.2(a)	RSS-247, § 5.2(a) RSS-Gen Issue 5,: § 6.7	13		PASSED
Occupied Channel Bandwidth 99%	2.1049(h)	RSS-Gen Issue 5, § 6.7	14		PASSED
Peak output power (Sweep)	§15.247(b)(3)	RSS-247, § 5.4(d)	11		PASSED
Transmitter Peak output power radiated	§15.247(b)(4)(c)(i)	RSS-247, § 5.4(d)	--	NP	
Emissions in non-restricted frequency bands	§15.247(d)	RSS-247, § 5.5	16		PASSED
Radiated Band-Edge emissions	§15.205(b) §15.247(d)	RSS-Gen: Issue 5 §8.9, §8.10 RSS-247, § 5.5	24		PASSED
Power spectral density	§15.247(e)	RSS-247, § 5.2(b)	12		PASSED
Radiated field strength emissions below 30 MHz	§15.205(a) §15.209(a)	RSS-Gen: Issue 5 §8.9 Table 6	18		PASSED
Radiated field strength emissions 30 MHz – 1 GHz	§15.209 §15.247(d)	RSS-Gen: Issue 5 §8.9 Table 5 RSS-247, § 5.5	20		PASSED
Radiated field strength emissions above 1 GHz	§15.209(a) §15.247(d)	RSS-Gen: Issue 5: §8.9 Table 5+7 RSS-247, § 5.5	22		PASSED
AC-Power Lines Conducted Emissions	§15.207	RSS-Gen Issue 5: § 8.8, Table 4	26		PASSED

PASSED	The EUT complies with the essential requirements in the standard.
FAILED	The EUT does not comply with the essential requirements in the standard.
NP	The test was not performed by the CETECOM Laboratory.
NT	Not tested
N/A	Not applicable

*The calculation of the measurement uncertainty shows compliance with the "maximum measurement uncertainties" of the tested standard and therefore for result evaluation the stated uncertainties will not be additionally added to the measured results.

1.3 Summary of Test Methods

Test case	Test method
Duty-Cycle	ANSI 63.10:2013, §11.6(b)
Minimum Emission Bandwidth 6 dB	ANSI C63.10:2013, §6.9.2, §11.8
Occupied Channel Bandwidth 99%	ANSI C63.10:2013, §6.9.3
Peak output power (Sweep)	ANSI C63.10:2013, §11.9
Power spectral density	ANSI C63.10:2013, §11.10
Emissions in non-restricted frequency bands	ANSI C63.10:2013, §11.11, §6.10.5
Radiated Band-Edge emissions	ANSI C63.10-2013; “Marker-Delta method”, §6.10.5, §11.13
Transmitter Peak output power radiated	Result calculated with measured conducted RF-power value and stated/measured antenna gain for band of interest
Radiated field strength emissions below 30 MHz	ANSI C63.10-2013 §6.3, §6.4
Radiated field strength emissions 30 MHz- 1 GHz	ANSI C63.4-2014 §8.2.3, ANSI C63.10-2013 §6.3, § 6.5
Radiated field strength emissions above 1 GHz	ANSI C63.4-2014 §8.3, ANSI C63.10-2013 §6.3, § 6.6
AC-Power Lines Conducted Emissions	ANSI C63.4-2014 §7, ANSI C63.10-2013 § 6.2

And reference also to Test methods in KDB558074

2 Administrative Data

2.1 Identification of the Testing Laboratory

Company name:	CETECOM GmbH
Address:	Im Teelbruch 116 45219 Essen - Kettwig Germany
Responsible for testing laboratory:	Ninovic Perez
Accreditation scope:	DAkkS Webpage
Test location:	CETECOM GmbH; Im Teelbruch 116; 45219 Essen - Kettwig

2.2 General limits for environmental conditions

Temperature:	22±2 °C
Relative. humidity:	45±15% rH

2.3 Test Laboratories sub-contracted

Company name:	

2.4 Organizational Items

Order No.:	1
Responsible test manager:	Patrick Marzotko
Receipt of EUT:	2021-Feb-10
Date(s) of test:	2021-Feb-15 – 2021-Mar-05
Version of template:	14.6

2.5 Applicant's details

Applicant's name:	ORTOVOX Sportartikel GmbH
Address:	Rotwandweg 5 82024 Taufkirchen Germany
Contact Person:	Tobias Schädel
Contact Person's Email:	tschaedel@ortovox.com

2.6 Manufacturer's details

Manufacturer's name:	x-log Elektronik GmbH
Address:	Balanstr. 55 81541 München Germany

2.7 EUT: Type, S/N etc. and short descriptions used in this test report

Short description*)	PMT Sample No.	Product	Model	Type	S/N	HW status	SW status
EUT 01	19-1-01300S06_C03	Avalanche Transceiver	DIRACT VOICE	n/a	n/a	160-801B	1507d2f54e3cc4eadd3ec541707165efee368ba1
EUT 02	19-1-01300S04_C03	Avalanche Transceiver	DIRACT VOICE	n/a	n/a	160-801B	1507d2f54e3cc4eadd3ec541707165efee368ba1

*) EUT short description is used to simplify the identification of the EUT in this test report.

2.8 Auxiliary Equipment (AE): Type, S/N etc. and short descriptions

Short description*)	PMT Sample No.	Auxiliary Equipment	Type	S/N	HW status	SW status
AE 01	-	FTDI chip	-	-	-	-
AE 02	-	FTDI chip	-	-	-	-
AE 03	-	Laptop	-	-	-	-

*) AE short description is used to simplify the identification of the auxiliary equipment in this test report.

2.9 Connected cables

Short description*)	PMT Sample No.	Cable type	Connectors	Length
CAB 01	-	USB	-	-
CAB 02	-	USB	-	-
CAB 03	-	USB/UART	-	-

*) CAB short description is used to simplify the identification of the connected cables in this test report.

2.10 Software

Short description*)	Software	SW status
SW 01	nRFgo Studio	1.2.27.0

*) SW short description is used to simplify the identification of the used software in this test report.

2.11 EUT set-ups

set-up no.*)	Combination of EUT and AE	Description
1	EUT 01 + AE 02 + AE 03 + CAB 02 + CAB 03	Used for Radiated measurements
2	EUT 02 + AE 01 + AE 03 + CAB 01 + CAB 03	Used for Conducted measurements

*) EUT set-up no. is used to simplify the identification of the EUT set-up in this test report.

2.12 EUT operation modes

EUT operating mode no.*)	Operating modes	Additional information
op. 1	BLE_TX-Mode **)	With help of special test firmware TX-mode was set-up. We refer to applicants information/papers for details about necessary commands.

*) EUT operating mode no. is used to simplify the test report.

) During tests EUT transmitter on 457 kHz was active. For details please refer to Tets report **19-1-0130001T14a

3 Equipment under test (EUT)

3.1 General Data of Main EUT as Declared by Applicant

Product name	Avalanche Transceiver		
Kind of product	DIRACT VOICE		
Firmware	☐ for normal use	☒ Special version for test execution	
	☐ AC Mains	-	
	☐ DC Mains	-	
	☒ Battery	3.7 V DC Lithium Ion battery	
Operational conditions	T_{nom} = +21 °C	T_{min} = -20 °C	T_{max} = +45 °C
EUT sample type	**Pre-Production**		
Weight	-		
Size [LxWxH]	-		
Interfaces/Ports	USB-C, MicroUSB		
For further details refer Applicants Declaration & following technical documents			
For further details regarding radio parameters, please refer to Bluetooth Core Specification			

3.2 Detailed Technical data of Main EUT as Declared by Applicant

Frequency Band	2.4 GHz ISM Band (2400 MHz - 2483.5 MHz)	
Number of Channels (USA/Canada -bands)	40 (37 Hopping + 3 Advertising)	
Nominal Channel Bandwidth	1 MHz	
Type of Modulation | Data Rate	☒ GFSK | 1 Mbit / s	☐ GFSK | 2 Mbit / s
	☐ GFSK | 500 kbit / s	☐ GFSK | 125 kbit / s
Other wireless options	☒ 457 kHz transmitter	
Max. Conducted Output Power	GFSK **-5.1** dBm	
EIRP Power (Calculated EIRP)	GFSK **-5.1** dBm + **5.3** dBi = **+0.2** dBm	
Antenna Type(s)	PCB	
Antenna Gain(s)	+5.3 dBi	
FCC label attached	No	
Test firmware / software and storage location	EUT 1/2	
For further details refer Applicants Declaration & following technical documents		

Description of Reference Document (supplied by applicant)	**Version**	**Total Pages**
bq24040	**March 2015**	**38**
Models	**-**	**2**

3.3 Modifications on Test sample

Additions/deviations or exclusions	-

4 Measurements

4.1 Duty-Cycle

Testing method:

The measurement is made according to relevant reference clauses:
(See Tables *Summary of Test Results* and *Summary of Test Methods* on page 5)

The necessary duty-cycle correction factor is determined on nominal conditions on middle channel only. It is assumed that no noticeable changes occur when tested on other channels or climatic conditions.

EUT settings
The EUT was instructed to send with maximum power (if adjustable) according applicants instructions.
Different modulation characteristics have been checked, e.g. data rates which EUT can operate.

A special firmware program is used for test purposes. In opposite to normal operating mode a higher duty-cycle is set in order to facilitate the measurements. This is maximized at the extent possible.

The necessary duty-cycle correction factor is determined on nominal conditions on one channel in each operable frequency-band. It is assumed that no noticeable changes occur when tested on other channels or climatic conditions. The Duty-Cycle was constant, means without variations.

Formula to calculate Duty-Cycle:

Duty cycle calculations: $x = {TX_{ON}}/{(TX_{ON} + TX_{OFF})}$	Duty cycle factor: DC=	Regarding power: $10 * log({1}/{x})$ dB
		Regarding field strength: $20 * log({1}/{x})$ dB

☒ The results were corrected in order to evaluate for worst-case result each time when average values are necessary for example average radiated emissions or similar
☐ No correction necessary: Duty-Cycle > 98%

4.1.1 Measurement Location

Test site	120910 - Radio Laboratory 1 (TS 8997)

4.1.2 Result

Channel	Duty-Cycle [%]	Duty-Cycle correction Power [dB]	Duty-Cycle correction Field Strength [dB]
01	23.490	6.291	12.582
19	23.506	6.288	12.576
39	23.522	6.285	12.571

4.2 Peak output power (Sweep)

4.2.1 Description of the general test setup and methodology, see below example:

The EUT's RF-signal is coupled out by a suitable antenna coupling connector (1). The signal is first attenuated (2) then connected to power meter (3) or spectrum-analyzer (4) for RF-conducted measurements. The specific attenuation loss is determined prior to the measurement within a set-up attenuation measurement. These are then taken into account by correcting the measurement readings.

Schematic:

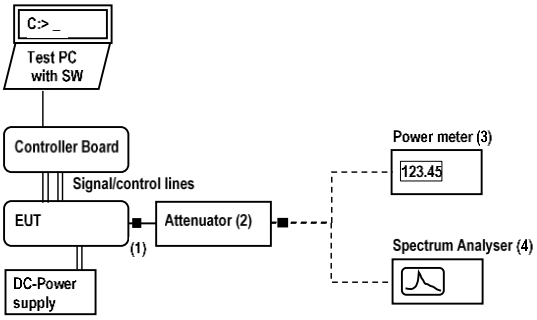

Testing method:

The measurement is made according to relevant reference clauses:
(See Tables *Summary of Test Results* and *Summary of Test Methods* on page 5)

Measurement is made using Rohde & Schwarz TS8997 test system.

Test method	PKPM1 Peak reading power meter (broadband PK RF-power meter)
Remarks	-

The measurement was performed in non-hopping transmission mode with the carrier set to lowest/middle and highest channel.

EUT settings
The EUT was instructed to send with maximum power (if adjustable) according applicants instructions.
Different modulation characteristics have been checked, e.g. data rates which EUT can operate

4.2.2 Measurement Location

Test site	120910 - Radio Laboratory 1 (TS 8997)

4.2.3 Limit

Frequency Range [MHz]	Limit [W]	Limit [dBm]	Detector	RBW / VBW [MHz]
2400 - 2483.5	1	30	MaxPeak	3 / 10

4.2.4 Result

Mode	Channel	Frequency [MHz]	Max Peak Power [dBm]	Result
BLE (1Mbps)	01	2402	-5.1	Passed
BLE (1Mbps)	19	2440	-5.6	Passed
BLE (1Mbps)	39	2480	-7.4	Passed

Remark: for more information and graphical plot see annex A1 **CETECOM_TR19-1-0130001T13a-A1**

4.3 Power spectral density

4.3.1 Description of the general test setup and methodology, see below example:

The EUT's RF-signal is coupled out by a suitable antenna coupling connector (1). The signal is first attenuated (2) then connected to spectrum-analyzer (4) for RF-conducted measurements. The specific attenuation loss is determined prior to the measurement within a set-up attenuation measurement. These are then taken into account by correcting the measurement readings of the spectrum-analyzer.

Schematic:

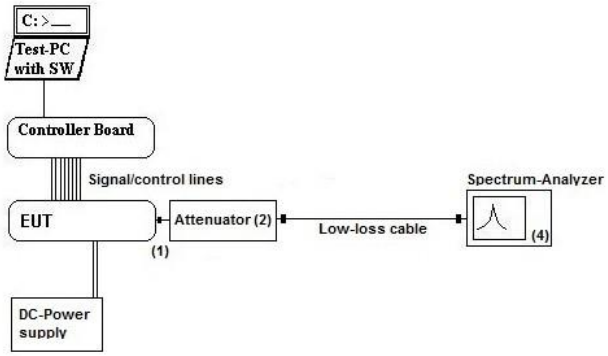

Testing method:

The measurement is made according to relevant reference clauses:
(See Tables *Summary of Test Results* and *Summary of Test Methods* on page 5)

Measurement is made using Rohde & Schwarz TS8997 test system.

Test method	PKPSD-Method
Remarks	-

EUT settings
The EUT was instructed to send with maximum power (if adjustable) according applicants instructions.

4.3.2 Measurement Location

Test site	120910 - Radio Laboratory 1 (TS 8997)

4.3.3 Limit

Limit [dBm] @ 3 kHz	Detector [MaxHold]	RBW / VBW [kHz]
<= 8	**Peak**	**3 / 10**

4.3.4 Result

Mode	Channel	Frequency [MHz]	PSD [dBm]	Result
BLE (1Mbps)	01	2402	-10.229	Passed
BLE (1Mbps)	19	2440	-10.851	Passed
BLE (1Mbps)	39	2480	-12.275	Passed

Remark: for more information and graphical plot see annex A1 **CETECOM_TR19-1-0130001T13a-A1**

4.4 Minimum Emission Bandwidth 6 dB

4.4.1 Description of the general test setup and methodology, see below example:

The EUT's RF-signal is coupled out by a suitable antenna coupling connector (1). The signal is first attenuated (2) then connected to spectrum-analyzer (4) for RF-conducted measurements. The specific attenuation loss is determined prior to the measurement within a set-up attenuation measurement. These are then taken into account by correcting the measurement readings of the spectrum-analyzer.

Schematic:

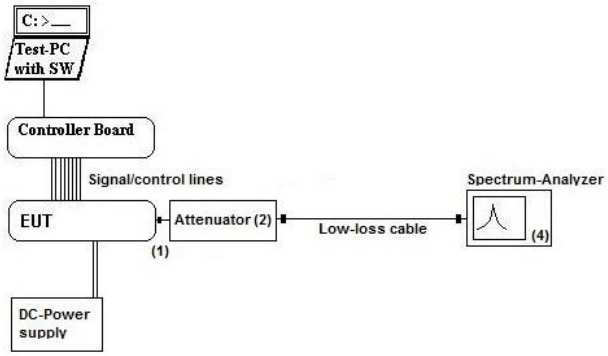

Testing method:

The measurement is made according to relevant reference clauses:
(See Tables *Summary of Test Results* and *Summary of Test Methods* on page 5)

Measurement is made using Rohde & Schwarz TS8997 test system.

4.4.2 Measurement Location

Test site	120910 - Radio Laboratory 1 (TS 8997)

4.4.3 Limit

Limit [kHz]	Detector [MaxHold]	RBW / VBW [kHz]
>= 500	**MaxPeak**	**100 / 300**

4.4.4 Result

Mode	Channel	Frequency [MHz]	6 dB bandwidth [MHz]	Result
BLE (1Mbps)	01	2402	0.712872	Passed
BLE (1Mbps)	19	2440	0.712872	Passed
BLE (1Mbps)	39	2480	0.732674	Passed

Remark: for more information and graphical plot see annex A1 **CETECOM_TR19-1-0130001T13a-A1**

4.5 Occupied Channel Bandwidth 99%

4.5.1 Description of the general test setup and methodology, see below example:

The EUT's RF-signal is coupled out by a suitable antenna coupling connector (1). The signal is first attenuated (2) then connected to spectrum-analyzer (4) for RF-conducted measurements. The specific attenuation loss is determined prior to the measurement within a set-up attenuation measurement. These are then taken into account by correcting the measurement readings of the spectrum-analyzer.

Schematic:

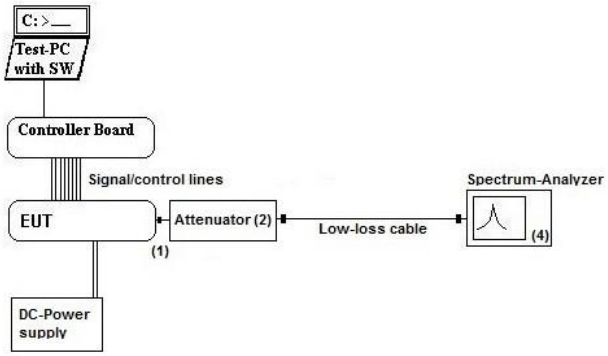

Testing method:

The measurement is made according to relevant reference clauses:
(See Tables *Summary of Test Results* and *Summary of Test Methods* on page 5)

Measurement is made using Rohde & Schwarz TS8997 test system.

4.5.2 Measurement Location

Test site	120910 - Radio Laboratory 1 (TS 8997)

4.5.3 Limit

When the occupied bandwidth limit is not stated in the applicable reference measurement method, the transmitted signal bandwidth shall be reported as the 99% emission bandwidth, as calculated or measured.

4.5.4 Result

Mode	Channel	Frequency [MHz]	99% Occupied bandwidth [MHz]	Result
BLE (1Mbps)	01	2402	1.005000	Passed
BLE (1Mbps)	19	2440	0.985000	Passed
BLE (1Mbps)	39	2480	0.950000	Passed

Remark: for more information and graphical plot see annex A1 **CETECOM_TR19-1-0130001T13a-A1**

4.6 Emissions in non-restricted frequency bands

4.6.1 Description of the general conducted test setup and methodology, see below example:

The EUT's RF-signal is coupled out by a suitable antenna coupling connector (1). The signal is first attenuated (2) then connected to spectrum-analyzer (4) for RF-conducted measurements. The specific attenuation loss is determined prior to the measurement within a set-up attenuation measurement. These are then taken into account by correcting the measurement readings of the spectrum-analyzer.

Schematic:

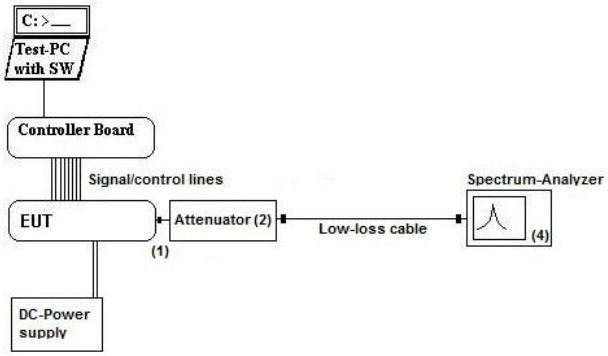

Testing method:

The measurement is made according to relevant reference clauses:
(See Tables *Summary of Test Results* and *Summary of Test Methods* on page 5)

Measurement is made using Rohde & Schwarz TS8997 test system.

The measurements were performed with the RBW set to 100 kHz & maximum carrier level was indicated with MAX-Hold positive peak detector using markers. Then a frequency line was set 20 or 30 dB below this measured maximum carrier level.

Then using RBW 100 kHz & spectrum analyzer span from 150 kHz to 25 GHz in three steps spurious emissions were measured with MAX-Hold positive peak detector.

The sweep time set as long as necessary to capture the full signal burst per hopping channel. The burst on-period is captured by setting appropriate markers in the rising and falling edges.

EUT settings
The EUT was instructed to send with maximum power (if adjustable) according applicants instructions.
Different modulation characteristics have been checked e.g. data rates which EUT can operate.

4.6.2 Measurement Location

Test site	120910 - Radio Laboratory 1 (TS 8997)

4.6.3 Limit

Frequency Range [MHz]	Limit [dBc]
0.15 – 25000	**-20 / -30**

4.6.4 Result

Maximum Level Peak [dBc]

Mode	Channel	Frequency [MHz]	Result
BLE (1Mbps)	01	2402	Passed
BLE (1Mbps)	19	2440	Passed
BLE (1Mbps)	39	2480	Passed

Remark1: every RF-Port tested separatelly in case on MIMO device
Remark2: for more information and graphical plot see annex A1 **CETECOM_TR19-1-0130001T13a-A1**

4.7 Radiated field strength emissions below 30 MHz

4.7.1 Description of the general test setup and methodology, see below example:

Evaluating the radiated field emissions are done first by an exploratory emission measurement and a final measurement for most critical frequencies determined.

The loop antenna was placed at 1 m height above ground plane and 3 m measurement distance from set-up for investigations. Because of reduced measurement distance, correction data were applied, as stated in chapter "General Limit - Radiated field strength emissions below 30 MHz". The tests are performed in the semi anechoic room recognized by the regulatory commission.

Schematic:

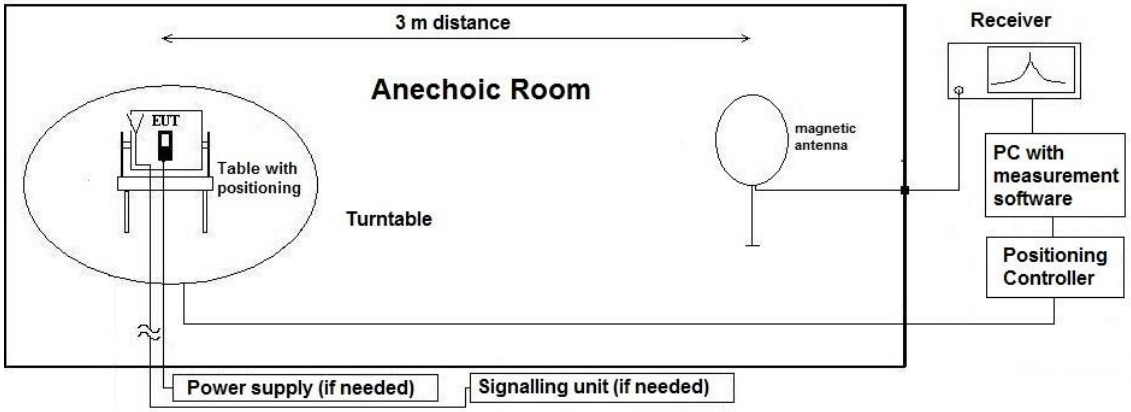

Testing method:

The measurement is made according to relevant reference clauses:
(See Tables *Summary of Test Results* and *Summary of Test Methods* on page 5)

Exploratory, preliminary measurements
The EUT and its associated accessories are placed on a non-conductive position manipulator (tipping device) of 0.8 m height which is placed on the turntable. By rotating the turntable (step 90°, range 0°to 360°) and the EUT itself either on 3-orthogonal axis (portable equipment) or 2-orthogonal axis (defined operational position of EUT), the emission spectrum was recorded.

The loop antenna was moved at least to 2-perpendicular axes (antenna vector in direction of EUT and parallel to EUT) in order to maximize the emissions. The results are documented in a diagram. Critical frequencies (low margin to limit) are saved within a data reduction table for further investigations. If various operating modes are supported, further investigations are made to find the worst-case. Also the interconnection cables and equipment position were varied in order to maximize the emissions.

Final measurement on critical frequencies
Based on the exploratory measurements, the most critical frequencies are re-measured by maintaining the EUT's worst-case operation mode, cable position, etc.

First a frequency zoom around the critical frequency is done to locate the frequency more precisely. After this step, for all identified critical frequencies, the maximum peak was determined.

Following parameters were varied: the turntable angle continuously in the range 0 to 360 degree, the EUT itself either over 3-orthogonal axis (not defined usage position) or 2-orthogonal axis (defined usage position).

On the determined worst-case position, a final measurement with necessary bandwidth and detector according standard has been carried out.

Formula:

$E_C = E_R + AF + C_L + D_F - G_A$

$M = L_T - E_C$

AF = Antenna factor
C_L = Cable loss
D_F = Distance correction factor (if used)
E_C = Electrical field – corrected value
E_R = Receiver reading
G_A = Gain of pre-amplifier (if used)
L_T = Limit
M = Margin

All units are dB-units, positive margin means value is below limit.

4.7.2 Measurement Location

Test site	120901 - SAC - Radiated Emission <1GHz

Correction factors due to reduced meas. distance (f< 30 MHz):

The used correction factors when the measurement distance is reduced compared to regulatory measurement distance, are calculated according Extrapolation formulas valid for EUT's with maximum dimension of 0.625xLambda. Formula 2+3+4 as presented in ANSI C63.10, Chapter 6.4.4 are used for the calculations of proper extrapolation factors

Frequency -Range	f [kHz/MHz]	Lambda [m]	Far-Field Point [m]	Distance Limit accord. 15.209 [m]		1st Condition (dmeas< Dnear-field)	2'te Condition (Limit distance bigger dnear-field)	Distance Correction accord. Formula
kHz	9.00E+03	33333.33	5305.17	300		fullfilled	not fullfilled	-80.00
	1.00E+04	30000.00	4774.65			fullfilled	not fullfilled	-80.00
	2.00E+04	15000.00	2387.33			fullfilled	not fullfilled	-80.00
	3.00E+04	10000.00	1591.55			fullfilled	not fullfilled	-80.00
	4.00E+04	7500.00	1193.66			fullfilled	not fullfilled	-80.00
	5.00E+04	6000.00	954.93			fullfilled	not fullfilled	-80.00
	6.00E+04	5000.00	795.78			fullfilled	not fullfilled	-80.00
	7.00E+04	4285.71	682.09			fullfilled	not fullfilled	-80.00
	8.00E+04	3750.00	596.83			fullfilled	not fullfilled	-80.00
	9.00E+04	3333.33	530.52			fullfilled	not fullfilled	-80.00
	1.00E+05	3000.00	477.47			fullfilled	not fullfilled	-80.00
	1.25E+05	2400.00	381.97			fullfilled	not fullfilled	-80.00
	2.00E+05	1500.00	238.73			fullfilled	fullfilled	-78.02
	3.00E+05	1000.00	159.16			fullfilled	fullfilled	-74.49
	4.00E+05	750.00	119.37			fullfilled	fullfilled	-72.00
	4.90E+05	612.24	97.44			fullfilled	fullfilled	-70.23
	5.00E+05	600.00	95.49	30		fullfilled	not fullfilled	-40.00
	6.00E+05	500.00	79.58			fullfilled	not fullfilled	-40.00
	7.00E+05	428.57	68.21			fullfilled	not fullfilled	-40.00
	8.00E+05	375.00	59.68			fullfilled	not fullfilled	-40.00
	9.00E+05	333.33	53.05			fullfilled	not fullfilled	-40.00
MHz	1.00	300.00	47.75			fullfilled	not fullfilled	-40.00
	1.59	188.50	**30.00**			fullfilled	not fullfilled	-40.00
	2.00	150.00	23.87			fullfilled	fullfilled	-38.02
	3.00	100.00	15.92			fullfilled	fullfilled	-34.49
	4.00	75.00	11.94			fullfilled	fullfilled	-32.00
	5.00	60.00	9.55			fullfilled	fullfilled	-30.06
	6.00	50.00	7.96			fullfilled	fullfilled	-28.47
	7.00	42.86	6.82			fullfilled	fullfilled	-27.13
	8.00	37.50	5.97			fullfilled	fullfilled	-25.97
	9.00	33.33	5.31			fullfilled	fullfilled	-24.95
	10.00	30.00	4.77			fullfilled	fullfilled	-24.04
	10.60	28.30	4.50			fullfilled	fullfilled	-23.53
	11.00	27.27	4.34			fullfilled	fullfilled	-23.21
	12.00	25.00	3.98			fullfilled	fullfilled	-22.45
	13.56	22.12	3.52			fullfilled	fullfilled	-21.39
	15.00	20.00	3.18			fullfilled	fullfilled	-20.51
	15.92	18.85	**3.00**			fullfilled	fullfilled	-20.00
	17.00	17.65	2.81			not fullfilled	fullfilled	-20.00
	18.00	16.67	2.65			not fullfilled	fullfilled	-20.00
	20.00	15.00	2.39			not fullfilled	fullfilled	-20.00
	21.00	14.29	2.27			not fullfilled	fullfilled	-20.00
	23.00	13.04	2.08			not fullfilled	fullfilled	-20.00
	25.00	12.00	1.91			not fullfilled	fullfilled	-20.00
	27.00	11.11	1.77			not fullfilled	fullfilled	-20.00
	29.00	10.34	1.65			not fullfilled	fullfilled	-20.00
	30.00	10.00	1.59			not fullfilled	fullfilled	-20.00

4.7.3 Limit

Radiated emissions limits, (3 meters)					
Frequency Range [MHz]	Limit [µV/m]	Limit [dBµV/m] *	Distance [m]	Detector	RBW [kHz]
0.009 – 0.09	2400 / f [kHz]	67.6 – 20Log(f) (kHz)	300	Pk & Avg	0.2
0.09 – 0.11	2400 / f [kHz]	67.6 – 20Log(f) (kHz)	300	Quasi peak	0.2
0.11 – 0.15	2400 / f [kHz]	67.6 – 20Log(f) (kHz)	300	Pk & Avg	0.2
0.15 – 0.49	2400 / f [kHz]	67.6 – 20Log(f) (kHz)	300	Pk & Avg	9
0.49 – 1.705	24000 / f [kHz]	87.6 – 20Log(f) (kHz)	30	Quasi peak	9
1.705 - 30	30	29.5	30	Quasi peak	9

*Remark: In Canada same limits apply, just unit reference is different

4.7.4 Result

Diagram	Channel	Mode	Maximum Level [dBµV/m] Frequency Range 0.009 – 30 MHz	Result
2.01a	Low	BLE_low_Postion: Standing	19.136 @ 20.174 MHz	Passed
2.01b	Low	BLE_low_Postion: Laying	19.136 @ 20.174 MHz	Passed
2.02a	Mid	BLE_mid_Postion: Standing	20.143 @ 20.143 MHz	Passed
2.02b	Mid	BLE_mid_Postion: Laying	19.621 @ 21.970 MHz	Passed
2.03a	High	BLE_high_Postion: Standing	19.079 @ 20.738 MHz	Passed
2.03b	High	BLE_high_Postion: Laying	17.142 @ 16.474 MHz	Passed

Remark: for more information and graphical plot see annex A1 **CETECOM_TR19-1-0130001T13a-A1**

4.8 Radiated field strength emissions 30 MHz – 1 GHz

4.8.1 Description of the general test setup and methodology, see below example:

Evaluating the emissions have to be done first by an exploratory emissions measurement and a final measurement for most critical frequencies. The tests are performed in a CISPR 16-1-4:2010 compliant semi anechoic room (SAR) and fully anechoic room (FAR) recognized by the regulatory commission. The measurement distance was set to 3 meter for frequencies up to 18 GHz and 2 meter above 18 GHz. A logarithmic periodic antenna is used for the frequency range 30 MHz to 1 GHz. Horn antennas are used for frequency range 1 GHz to 40 GHz. The EUT is aligned within 3 dB beam width of the measurement antenna with three orthogonal axis measurements on the EUT.

Schematic:

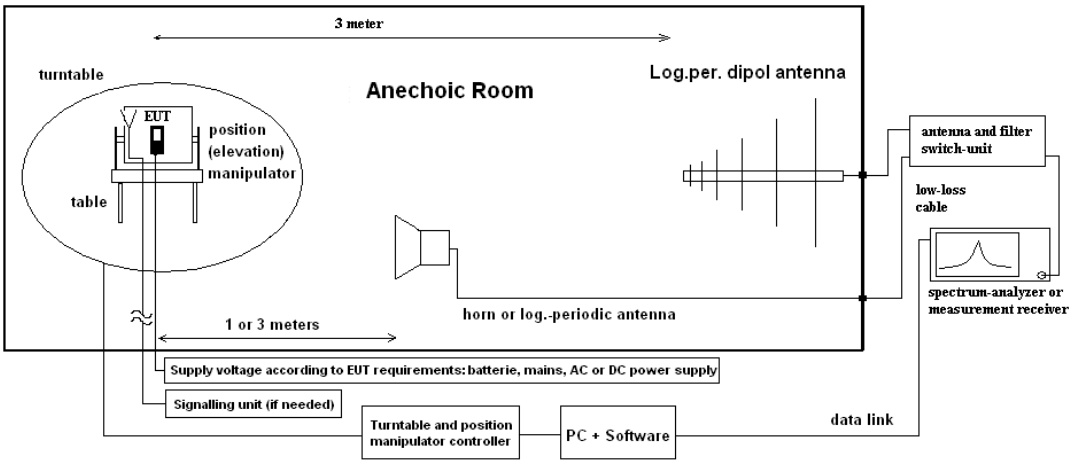

Testing method:

The measurement is made according to relevant reference clauses:
(See Tables *Summary of Test Results* and *Summary of Test Methods* on page 5)

Exploratory, preliminary measurements
The EUT and its associated accessories are placed on a non-conductive position manipulator (tipping device) of 0.8 m height which is placed on the turntable. By rotating the turntable (range 0° to 360°, step 90°) and the EUT itself either on 3-orthogonal axis (portable equipment) or 2-orthogonal axis (defined operational position of EUT) the emission spectrum and its characteristics was recorded with an EMI-receiver, broadband antenna and software.

Measurement antenna: horizontal and vertical, heights: 1,0 m and 1,82 m as worst-case determined by an exploratory emission measurements. The results are documented in a diagram. Critical frequencies (low margin to limit) are saved within a table for further investigations. If various operating modes are supported, further investigations are made to find the worst-case of them. Also the interconnection cables and equipment position were varied in order to maximize the emissions.

Final measurement on critical frequencies
Based on the exploratory measurements, the most critical frequencies are re-measured by main-taining the EUT's worst-case operation mode, cable position, etc. either on 10m OATS or 3m semi-anechoic room.
First a frequency zoom around the critical frequency is done to locate the frequency more precisely. After this step, for all identified critical frequencies, the maximum peak was determined.

Following parameters were varied: the turntable angle continuously in the range 0 to 360 degree, the EUT itself either over 3-orthogonal axis (not defined usage position) or 2-orthogonal axis (defined usage position). The measurement antenna height between 1 m and 4 m.
On the determined worst-case position, a final measurement with necessary bandwidth and detector according standard has been carried out

Formula:

$E_C = E_R + AF + C_L + D_F - G_A$ (1)

$M = L_T - E_C$ (2)

AF = Antenna factor
C_L = Cable loss
D_F = Distance correction factor (if used)
E_C = Electrical field – corrected value
E_R = Receiver reading
G_A = Gain of pre-amplifier (if used)
L_T = Limit
M = Margin

All units are dB-units, positive margin means value is below limit.

4.8.2 Measurement Location

Test site	120901 - SAC - Radiated Emission <1GHz

4.8.3 Limit

Radiated emissions limits, (3 meters)				
Frequency Range [MHz]	Limit [µV/m]	Limit [dBµV/m]	Detector	RBW / VBW [kHz]
30 - 88	100	40.0	Quasi peak	100 / 300
88 - 216	150	43.5	Quasi peak	100 / 300
216 - 960	200	46.0	Quasi peak	100 / 300
960 - 1000	500	54.0	Quasi peak	100 / 300

4.8.4 Result

Diagram	Channel	Mode	Maximum Level [dBµV/m] Frequency Range 30 – 1000 MHz	Result
3.01a	Low	BLE_low_Postion: Standing	30.06 @ 192.36 MHz	Passed
3.01b	Low	BLE_low_Postion: Laying	30.20 @ 192.23 MHz	Passed
3.02a	Mid	BLE_mid_Postion: Standing	28.71 @ 192.62 MHz	Passed
3.02b	Mid	BLE_mid_Postion: Laying	29.83 @ 191.59 MHz	Passed
3.03a	High	BLE_high_Postion: Standing	30.09 @ 192.01 MHz	Passed
3.03b	High	BLE_high_Postion: Laying	30.06 @ 192.36 MHz	Passed

Remark: for more information and graphical plot see annex A1 **CETECOM_TR19-1-0130001T13a-A1**

4.9 Radiated field strength emissions above 1 GHz

4.9.1 Description of the general test setup and methodology, see below example:

Evaluating the emissions have to be done first by an exploratory emissions measurement and a final measurement for most critical frequencies. The tests are performed in a CISPR 18-1-4:2010 compliant fully anechoic room (FAR) recognized by the regulatory commission. The measurement distance was set to 3 meter for frequencies up to 18 GHz and 2 meter above 18 GHz. A logarithmic periodic antenna is used for the frequency range 30 MHz to 1 GHz. Horn antennas are used for frequency range 1 GHz to 40 GHz. The EUT is aligned within 3 dB beam width of the measurement antenna with three orthogonal axis measurements on the EUT.

Schematic:

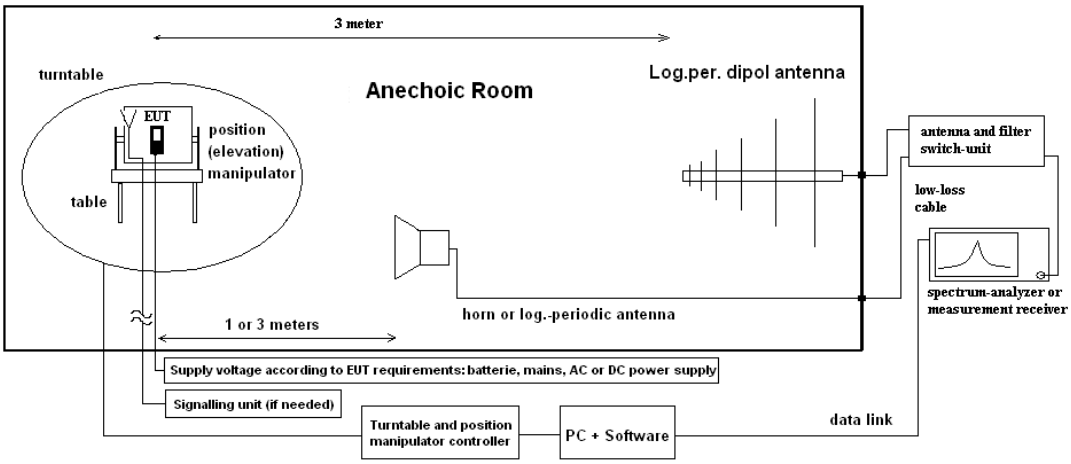

Testing method:

The measurement is made according to relevant reference clauses:
(See Tables *Summary of Test Results* and *Summary of Test Methods* on page 5)

Exploratory, preliminary measurements
The EUT and its associated accessories are placed on a non-conductive position manipulator (tipping device) of 1.55 m height which is placed on the turntable. By rotating the turntable (range 0° to 360°, step 15°) and the EUT itself either on 3-orthogonal axis (portable equipment) or 2-orthogonal axis (defined operational position of EUT) the emission spectrum and its characteristics was recorded with an EMI-receiver, broadband antenna and software.
The measurements are performed in horizontal and vertical polarization of the measurement antennas. The results are documented in a diagram. Critical frequencies (low margin to limit) are saved within a table for further investigations. If various operating modes are supported, further investigations are made to find the worst-case of them. Also the interconnection cables and equipment position were varied in order to maximize the emissions.

Final measurement on critical frequencies
Based on the exploratory measurements, the most critical frequencies are re-measured by maintaining the EUT's worst-case operation mode, cable position, etc.

First a frequency zoom around the critical frequency is done to locate the frequency more precisely. After this step, for all identified critical frequencies, the maximum peak was determined.

Following parameters were varied: the turntable angle continuously in the range 0 to 360 degree, the EUT itself over 3-orthogonal axis and the height for EUT with large dimensions or three axis scan for portable/small equipment.

On the determined worst-case position, a final measurement with necessary bandwidth and detector according standard has been carried out.

Formula:

$E_C = E_R + A_F + C_L + D_F - G_A$ (1)

$M = L_T - E_C$ (2)

E_C = Electrical field – corrected value
E_R = Receiver reading
M = Margin
L_T = Limit
A_F = Antenna factor
C_L = Cable loss
D_F = Distance correction factor (if used)
G_A = Gain of pre-amplifier (if used)

All units are dB-units, positive margin means value is below limit.

4.9.2 Measurement Location

Test site 1 – 18 GHz	120904 - FAC1 - Radiated Emissions
Test site 18 – 26.5 GHz	120907 - FAC2

4.9.3 Limit

Radiated emissions limits, (3 meters)				
Frequency Range [MHz]	**Limit [µV/m]**	**Limit [dBµV/m]**	**Detector**	**RBW / VBW [kHz]**
Above 1000	500	54	Average	1000 / 3000
Above 1000	5000	74	Peak	1000 / 3000

4.9.4 Result

Diagram	Channel	Mode	Maximum Level [dBµV/m] Frequency Range 1 – 15 GHz	Result
4.01a	Low	BLE | Channel low	58.871 @ 14.147 GHz	Passed
4.02a	Mid	BLE | Channel Mid	59.744 @ 14.232 GHz	Passed
4.03a	High	BLE | Channel High	59.670 @ 14.223 GHz	Passed

Remark: for more information and graphical plot see annex A1 **CETECOM_TR19-1-0130001T13a-A1**

Diagram	Channel	Mode	Maximum Level [dBµV/m] Frequency Range 15 – 26.5 GHz	Result
4.01b	Low	BLE | Channel low	58.37 @ 26.078 GHz	Passed
4.02b	Mid	BLE | Channel Mid	57.51 @ 24.898 GHz	Passed
4.03b	High	BLE | Channel High	58.14 @ 23.717 GHz	Passed

Remark: for more information and graphical plot see annex A1 **CETECOM_TR19-1-0130001T13a-A1**

4.10 Radiated Band-Edge emissions

4.10.1 Description of the general test setup and methodology, see below example:

Schematic:

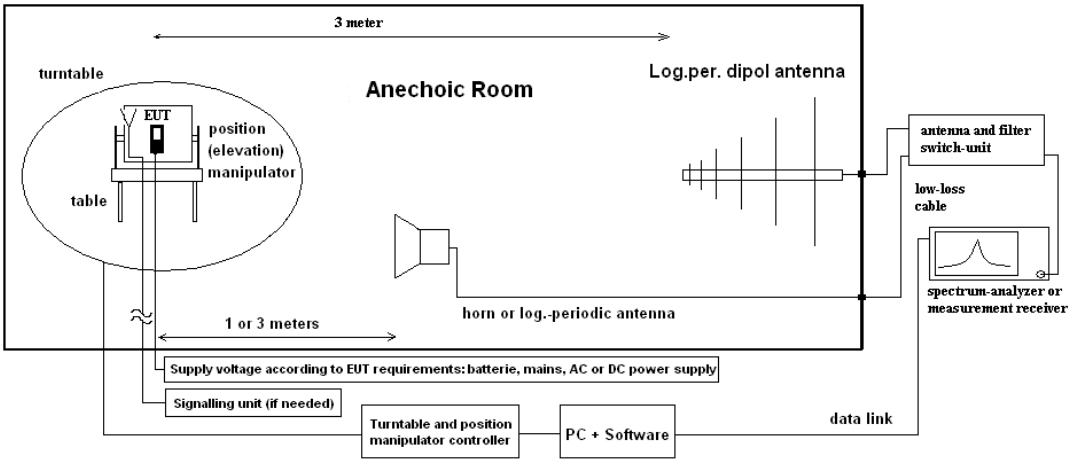

Testing method:

The measurement is made according to relevant reference clauses:
(See Tables *Summary of Test Results* and *Summary of Test Methods* on page 5)

For uncritical results where a measurement resolution bandwidth of 1MHz can clearly show the compliance without influencing the results, a field strength measurement was performed to show compliance.

For critical results a Marker-Delta marker method was used for showing compliance to restricted bands.
The method consists of three independent steps:

1. Step: Prior to the measurement the fundamental radiated In-Band field strength was performed. The determined value is used as reference value.

2. Step: Second step consist of finding the relative attenuation between the fundamental emission and the maximum local out-of-band emission (within 2 MHz range around the band edge either on the band-edge directly or some modulation product if the level is greater than that on the band-edge) when measured with lower resolution bandwidth.

3. Step: The delta value recorded in step 2 will be subtracted from value recorded in step 1, thus giving the required field strength at the band-edge. This value must fulfil the requirements for radiated spurious emissions in restricted bands in FCC §15.205 with the general limits of FCC §15.209

The EUT was instructed to send with maximum power (if adjustable) according to applicants instructions.

4.10.2 Measurement Location

Test site	120904 - FAC1 - Radiated Emissions

4.10.3 Limit

Frequency Range [MHz]	Pk Limit [dBc]	Avg Limit [dBc]	Avg Limit [dBµV/m]	Pk Limit [dBµV/m]	Detector	RBW / VBW [kHz]
Below 2390	-	-	54	74	Average / Peak	100 / 300
Above 2483.5	-	-	54	74	Average / Peak	1000 / 3000
2390 - 2400	-20	-	-	-	Peak	100 / 300
2390 - 2400	-	-30	-	-	Average	100 / 300

4.10.4 Result

Non-restricted bands near-by

Diagram	Channel	Mode	Peak [dBc]	Average [dBc]	Result
9.01	Low	BLE | Channel low	39.170	39.382	Passed

Remark: for more information and graphical plot see annex A1 **CETECOM_TR19-1-0130001T13a-A1**

Restricted bands near-by

Diagram	Channel	Mode	Peak [dBµV/m]	Average [dBµV/m]	Result
9.02	High	BLE | Channel high	57.794	46.520	Passed

Remark1: Average value not corrected with Duty Cycle – Factor due to noise level, refer also to diagram no. 9.03
Remark2: for more information and graphical plot see annex A1 **CETECOM_TR19-1-0130001T13a-A1**

4.11 AC-Power Lines Conducted Emissions

4.11.1 Description of the general test setup and methodology, see below example:

The radio frequency voltage conducted back into the AC power line in the frequency range 150 kHz to 30 MHz has to be investigated.
Compliance should be tested by measuring the radio frequency voltage between each power line and ground at the power terminals in the stated frequency range.
A 50 Ohm / 50 µH line impedance stabilization network (LISN) is used coupling the interface to the measurement equipment.
The EUT power input leads are connected through the LISN to the AC-power source. The LISN enclosure is electrically connected to the ground plane. The measuring instrument is connected to the coaxial output of the LISN.

Tabletop devices were set-up on an 80 cm height above reference ground plane, floor standing equipment 10 cm raised above ground plane.
Measurements have been performed on each phase line and neutral line of the devices AC-power lines.
The EUT was power supplied with 120 V/60 Hz. The EUT was tested in the defined operating mode
and installed (connected) to accessory equipment according the general description of use given by the applicant.

Schematic:

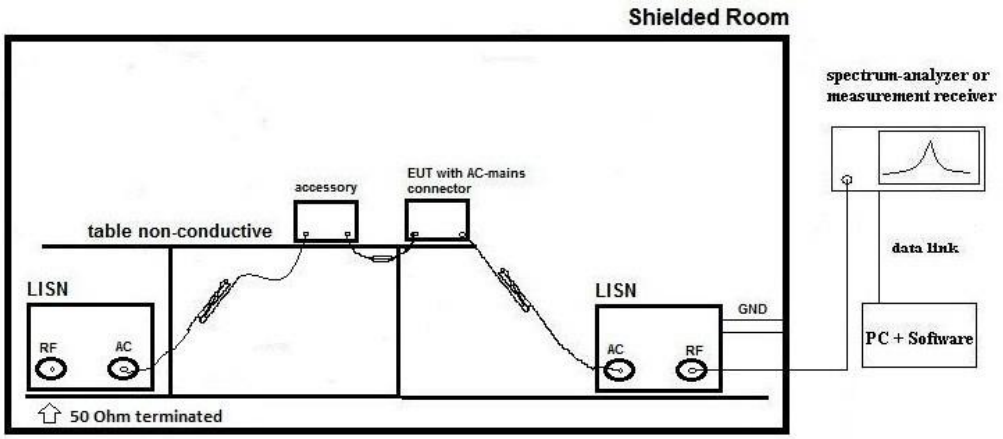

Testing method:

The measurement is made according to relevant reference clauses:
(See Tables *Summary of Test Results* and *Summary of Test Methods* on page 5)

Exploratory, preliminary measurements
As a first step, determines the worst-case phase line (neutral or phase) as well as the most critical operating mode of the equipment. A complete frequency-sweep with PK-Detector is performed on each current-carrying conductor.

Final measurement on critical frequencies
For power phases and critical frequencies (Margin to AV- or QP limit lower than 3 dB) as a second step includes measurements with receivers detector set to Quasi-Peak and Average.

Formula:

$V_C = V_R + C_L$ (1)
$M = L_T - V_C$ (2)

V_C = measured Voltage –corrected value
V_R = Receiver reading
C_L = Cable loss
M = Margin
L_T = Limit

All units are dB-units, positive margin means value is below limit.

4.11.2 Measurement Location

Test site	120919 - Conducted Emission

4.11.3 Limit

Frequency Range [MHz]	QUASI-Peak [dBµV]	AVERAGE [dBµV]
0.15 – 0.5	66 to 56*	56 to 46*
0.5 – 5	56	46
5 – 30	60	50

4.11.4 Result

Diagram	Mode	Power Line	Max [dBµV]	Detector	Result
1.01	BLE (1Mbps) low channel	N/L1	43.46	Average	Passed

Remark: see more in diagrams in separate document **CETECOM_TR19-1-0130001T13a-A1**

4.12 Results from external laboratory

None	-

4.13 Opinions and interpretations

None	-

4.14 List of abbreviations

None	-

5 Equipment lists

ID	Description	Manufacturer	SerNo	Cal due date
	120901 - SAC - Radiated Emission <1GHz			**2025-Jul-21**
20574	Biconilog Hybrid Antenna BTA-L	Frankonia GmbH	980026L	2022-May-03
20487	CETECOM Semi Anechoic Chamber < 1GHz	ETS-Lindgren Gmbh	-	2025-Jul-15
20620	EMI Test Receiver ESU26	Rohde & Schwarz Messgerätebau GmbH	100362	2021-May-13
20482	filter matrix Filter matrix SAR 1	CETECOM GmbH	-	
25038	Loop Antenna HFH2-Z2	Rohde & Schwarz Messgerätebau GmbH	879824/13	2022-Apr-07
20885	Power Supply EA3632A	Agilent Technologies Deutschland GmbH	75305850	
	120904 - FAC1 - Radiated Emissions			
20341	Digital Multimeter Fluke 112	Fluke Deutschland GmbH	81650455	2022-May-25
20489	EMI Test Receiver ESU40	Rohde & Schwarz Messgerätebau GmbH	1000-30	2021-May-13
20254	High Pass Filter 5HC 2600/12750-1.5KK (GSM1800/1900/DECT)	Trilithic	23042	
20868	High Pass Filter AFH-07000	AtlanTecRF	16071300004	
20291	High Pass Filter WHJ 2200-4EE (GSM 850/900)	Wainwright Instruments GmbH	14	
20020	Horn Antenna 3115 (Subst 1)	EMCO Elektronik GmbH	9107-3699	2021-Jul-19
20302	Horn Antenna BBHA9170 (Meas 1)	Schwarzbeck Mess-Elektronik OHG	155	2023-Apr-15
20549	Log. Per. Antenna HL025	Rohde & Schwarz Messgerätebau GmbH	1000060	2021-Jul-31
20720	Measurement Software EMC32 [FAC]	Rohde & Schwarz Messgerätebau GmbH	V10.xx	
20512	Notch Filter WRCA 800/960-02/40-6EEK (GSM 850)	Wainwright Instruments GmbH	24	

ID	Description	Manufacturer	SerNo	Cal due date
20290	Notch Filter WRCA 901,9/903,1SS (GSM 900)	Wainwright Instruments GmbH	3RR	
20122	Notch Filter WRCB 1747/1748 (GSM 1800)	Wainwright Instruments GmbH	12	
20121	Notch Filter WRCB 1879,5/1880,5EE (GSM 1900)	Wainwright Instruments GmbH	15	
20448	Notch Filter WRCT 1850.0/2170.0-5/40-10SSK (WCDMA-FDD II)	Wainwright Instruments GmbH	5	
20066	Notch Filter WRCT 1900/2200-5/40-10EEK (WCDMA - FDDI)	Wainwright Instruments GmbH	5	
20449	Notch Filter WRCT 824.0/894.0-5/40-8SSK (WCDMA FDD V)	Wainwright Instruments GmbH	1	
20611	Power Supply E3632A	Agilent Technologies Deutschland GmbH	KR 75305854	
20338	Pre-Amplifier 100MHz - 26GHz JS4-00102600-38-5P	Miteq Inc.	838697	
20484	Pre-Amplifier 2,5GHz - 18GHz AMF-5D-02501800-25-10P	Miteq Inc.	1244554	
20287	Pre-Amplifier 25MHz - 4GHz AMF-2D-100M4G-35-10P	Miteq Inc.	379418	
20670	Radio Communication Tester CMU200	Rohde & Schwarz Messgerätebau GmbH	106833	2022-Jun-16
20690	Spectrum Analyzer FSU	Rohde & Schwarz Messgerätebau GmbH	100302/026	2021-May-23
20439	Ultrabroadband-Antenna HL562	Rohde & Schwarz Messgerätebau GmbH	100248	2023-Mar-10
	120907 - FAC2			
20836	1-18 GHz Amplifier	Wright Technologies, Inc., Inc.	0001	
20005	AC - LISN 50 Ohm/50µH ESH2-Z5	Rohde & Schwarz Messgerätebau GmbH	861741/005	2021-May-13
20910	Frequency Multiplier 936VF-10/385	MI-Wave, Millimeter Wave Products Inc.	142	
20911	Frequency Multiplier 938WF-10/387	MI-Wave, Millimeter Wave Products Inc.	141	
20730	FS-Z110	Rohde & Schwarz Messgerätebau GmbH	101468	2023-Jun-19
20729	FS-Z140	Rohde & Schwarz Messgerätebau GmbH	101004	2023-May-26
20731	FS-Z75	Rohde & Schwarz Messgerätebau GmbH	101022	2022-Jun-16
20733	Harmonic Mixer FS-Z220	RPG-Radiometer Physics GmbH	101009	
20734	Harmonic Mixer FS-Z325	RPG-Radiometer Physics GmbH	101005	
20811	Horn Antenna ASY-SGH-124-SMA	Antenna Systems Solutions S.L	29F14182337	2021-Oct-08
20877	JS42-08001800-16-8P Verstärker	Miteq Inc.	2079991 / 2079992	
20912	Low noise Amplifier Module 0.5-4GHz	RF-Lambda Europe GmbH	19041200083	

ID	Description	Manufacturer	SerNo	Cal due date
20913	Phase Amplitude Stable Cable Assembly DC-40GHz	RF-Lambda Europe GmbH	AC19040001	
20814	Pickett-Potter Horn Antenna FH-PP 140	RPG-Radiometer Physics GmbH	10008	
20767	Pickett-Potter Horn Antenna FH-PP 140-220	RPG-Radiometer Physics GmbH	010011	
20812	Pickett-Potter Horn Antenna FH-PP-325	RPG-Radiometer Physics GmbH	10024	
20816	SGH Antenna SGH-26-WR10		1144	
20732	Signal- and Spectrum Analyzer FSW67	Rohde & Schwarz Messgerätebau GmbH	104023	2021-May-27
20909	Waveguide Horn Antenna PE9881-24	Pasternack Enterprises, Inc.	37/2016	
20908	Waveguide WR 10 attenuator STA-30-10-M2	SAGE Millimeter Inc.	13256-01	
20907	Waveguide WR-15 attenuator STA-30-15-M2	SAGE Millimeter Inc.	13256-01	
20817	WR-22 Horn / SAR-2309-22-S2	SAGE Millimeter Inc.	13254-01	2023-Jul-29
	120910 - Radio Laboratory 1 (TS 8997)			
20904	Climatic Chamber ClimeEvent C/1000/70a/5	Weiss Umwelttechnik GmbH	58226223240010	2021-May-09
20871	NRP-Z81	Rohde & Schwarz Messgerätebau GmbH	104631	2021-Mar-24
20872	NRX Power Meter	Rohde & Schwarz Messgerätebau GmbH	101831	2022-Jan-28
20805	Open Switch and control Platform OSP B157WX 40GHz 8Port Switch	Rohde & Schwarz Messgerätebau GmbH	101264	2023-May-13
20691	Open Switch and control Platform OSP120	Rohde & Schwarz Messgerätebau GmbH	101056	2023-May-13
20866	Signal Analyzer FSV3030	Rohde & Schwarz Messgerätebau GmbH	101247	2021-Sep-09
20687	Signal Generator SMF 100A	Rohde & Schwarz Messgerätebau GmbH	102073	2022-May-25
20559	Vector Signal Generator SMU200A	Rohde & Schwarz Messgerätebau GmbH	103736	2021-May-22
	120919 - Conducted Emission			
20300	AC - LISN (50 Ohm/50µH, 1-phase) ESH3-Z5	Rohde & Schwarz Messgerätebau GmbH	892 239/020	2021-May-13
20468	Digital Multimeter Fluke 112	Fluke Deutschland GmbH	90090455	2021-May-16
20377	EMI Test Receiver ESCS30	Rohde & Schwarz Messgerätebau GmbH	100160	2021-May-12
20536	Impedance Stabilization Network ISN ST08	Teseq GmbH	25867	2023-May-20
20533	Impedance Stabilization Network ISN T200A	Teseq GmbH	25706	2023-May-20

ID	Description	Manufacturer	SerNo	Cal due date
20534	Impedance Stabilization Network ISN T400A	Teseq GmbH	24881	2023-May-20
20541	Impedance Stabilization Network ISN T8-Cat6	Teseq GmbH	26373	2023-May-20
20535	Impedance Stabilization Network ISN T800	Teseq GmbH	26321	2023-May-20
20099	Passive Voltage Probe ESH2-Z3	Rohde & Schwarz Messgerätebau GmbH	299.7810.52	2021-May-16
20100	passive voltage probe TK 9416	Schwarzbeck Mess-Elektronik OHG	without	2021-May-16
20033	RF-current probe (100kHz-30MHz) ESH2-Z1	Rohde & Schwarz Messgerätebau GmbH	879581/18	2021-May-23
20373	Single-Line V-Network (50 Ohm/5µH) ESH3-Z6	Rohde & Schwarz Messgerätebau GmbH	100535	2021-May-13
20007	Single-Line V-Network (50 Ohm/5µH) ESH3-Z6	Rohde & Schwarz Messgerätebau GmbH	892563/002	2021-May-13
20556	Thermo-/Hygrometer WS-9400	Conrad Electronic GmbH	-	
20051	VHF-Current Probe 20-300 MHz ESV-Z1	Rohde & Schwarz Messgerätebau GmbH	872421	2021-May-16

6 Measurement Uncertainty valid for conducted/radiated measurements

The reported uncertainties are calculated based on the standard uncertainty multiplied with the appropriate coverage factor **k**, such that a confidence level of approximately 95% is achieved. For uncertainty determination, each component used in the concrete measurement set-up was taken in account and it contribution to the overall uncertainty according its statistical distribution calculated.

RF-Measurement	Reference	Frequency range	Calculated uncertainty based on a confidence level of 95%						Remarks
Conducted emissions (U_{CISPR})	-	9 kHz - 150 kHz 150 kHz - 30 MHz	4.0 dB 3.6 dB						-
Power Output radiated	-	30 MHz - 4 GHz	3.17 dB						Substitution method
Power Output conducted	-	Set-up No.	Cel-C1	Cel-C2	BT1	W1	W2	--	
		9 kHz - 12.75 GHz	N/A	0.60	0.7	0.25	N/A	--	-
		12.75 GHz - 26.5 GHz	N/A	0.82	--	N/A	N/A	--	
Conducted emissions on RF-port	-	9 kHz - 2.8 GHz	0.70	N/A	0.70	N/A	0.69	--	N/A - not applicable
		2.8 GHz - 12.75 GHz	1.48	N/A	1.51	N/A	1.43	--	
		12.75 GHz – 18 GHz	1.81	N/A	1.83	N/A	1.77	--	
		18 GHz - 26.5 GHz	1.83	N/A	1.85	N/A	1.79	--	
Occupied bandwidth	-	9 kHz - 4 GHz	0.1272 ppm (Delta Marker)						Frequency error
			1.0 dB						Power
Emission bandwidth	-	9 kHz - 4 GHz	0.1272 ppm (Delta Marker)						Frequency error
	-		See above: 0.70 dB						Power
Frequency stability	-	9 kHz - 20 GHz	0.0636 ppm						-
Radiated emissions Enclosure	-	150 kHz - 30 MHz	5.01dB						Magnetic field strength
		30 MHz - 1 GHz 1 GHz - 18 GHz 18-26.5 GHz	5.83 dB 4.91 dB 5.06 dB						Electrical Field strength

7 Versions of test reports (change history)

Version	Applied changes	Date of release
--	Initial release	2021-Mar-24

End Of Test Report