OW-2000

Outdoor Wireless Access Point

User's Manual

BEFORE INSTALLING THE UNIT, PLEASE READ THIS MANUAL THOROUGHLY, AND RETAIN IT FOR FUTURE REFERENCE.

► *Contents*

Chapter 1. Introduction 4
1.1 Introducing the OW-2000 4
1.2 Product Features 4
1.3 Package Contents 4
1.4 System Requirements 5
1.5 Inline Power Injector (PoE) 5
Chapter 2. Installation and Basic Configuration 6
2.1 Before You Start 6
2.2 Locate the OW-2000 and Inline Power Injector Ports 7
2.3 Preparing Installation 9
2.4 Basic Configuration 10
2.4.1 Basic Configuration Steps 10
2.4.2 Logging into the Web Interface 10
2.4.3 Set Operating Mode, IP Address, Subnet Mask, Default Route IP, DNS Server IP of OW-2000 13
2.4.4 Set Wireless SSID for Wireless Interface 15
2.4.5 Set Wireless Encryption for Wireless Interface 16
2.4.6 Change Supervisor Account & Password 17
2.4.7 Upgrade the Firmware 18
Chapter 3. Network Topologies 19
3.1 Wireless Client Bridge-to-Central Wireless Bridge 20
Chapter 4. All function on Device 21
4.1 BASIC 21
4.1.1 Wizard 21
4.1.2 LAN 23
4.1.3 DHCP 25
4.1.4 WIRELESS 30
4.2 ADVANCED 35
4.2.1 MAC Address Filter 35
4.2.2 Advance Wireless 37
4.3 TOOLS 39
4.3.1 Admin 39
4.3.2 Time 42
4.3.3 System 44
4.3.4 Firmware 45
4.4 Status 47
4.4.1 Device Info 47
4.4.2 Logs 49
4.4.3 Statistics 51
Chapter 5. Specifications 53
Chapter 6. Default Settings 56
6.1 BASIC 56

6.1.1 WIZARD 56
6.1.2 LAN 57
6.1.3 DHCP 57
6.1.4 WIRELESS 58
6.2 ADVANCE 59
6.2.1 MAC Address Filter 59
6.2.2 Advanced Wireless 59
6.3 TOOLS 59
6.3.1 ADMIN 59
6.3.2 TIME 60
6.3.3 SYSTEM 60
6.3.4 FIRMWARE 60

Chapter 1. Introduction

1.1 Introducing the OW-2000

The OW-2000 is fully interoperable with IEEE 802.11a and/or 802.11b/g compliant Outdoor Wireless Last-mile product. The OW-2000 operates in AP mode or remote bridge mode, and connects to OW-2000 AP/CB to construct point-to-point as well as point-to-multipoint topologies, for maximum flexibility in configuring building-to-building networks and WISP functions.

1.2 Product Features

- Outdoor enclosure in compliance with versatile industrial IP（Ingress Protection） level covering IP67, IP66, IP55 and IP50
- RF transmit power 802.11b mode @ 11Mbps data rate
- RF transmit power 802.11g mode @ 54Mbps data rate
- Embedded 9dBi patch directional antenna
- Support 48VDC 0.375A Power-over-Ethernet（PoE）
- NAT/NAPT and Virtual Server Mapping support (Optional / RB only)
- MIB-I support
- MAC address based access control

Hint: IP（Ingress Protection）

1.3 Package Contents

The product package contains the following items.

1. One (1) OW-2000 Outdoor Wireless Access Point / Client Bridge unit
2. One (1) 100~240VAC, 50~60Hz AC to 48V/0.375A DC switching adapter
3. One (1) 48VDC, 0.375A Inline Power Injector (PoE)
4. One (1) 30m RJ-45 CAT-5 Ethernet cable
5. One (1) 1.8m RJ-45 CAT-5 Cross Over Cable
6. One (1) 1.8m grounding wire (Optional)
7. One (1) User manual CD-disc
8. One (1) wall/mast mounting kit
9. One (1) band clamp

1.4 System Requirements

Installation of the OW-2000 Outdoor Wireless Access Point/Client Bridge requires the following:

1. A Windows-based PC/AT compatible computer（PC system requirement：better than PIII 800 or other 100% compatible equipment , OS：windows 2000/XP ） or Ethernet data device with an available RJ-45 Ethernet port to run the configuration program or with TCP/IP connection to the Ethernet network.
2. A 10/100Base-T Ethernet RJ-45 Ethernet cable is connected to Ethernet network.
3. An AC power outlet (100~240V, 50~60Hz) supplies the power.

1.5 Inline Power Injector (PoE)

The OW-2000 is equipped with an Inline Power Injector module. The Inline Power Injector (PoE) delivers both data and power to OW-2000 unit via a signal Ethernet cable, and gives the following benefits to improve the performance vs. installation cost ratio.

- This works great in areas where you may not have power , like house roof.
- This also allows you to place the OW-2000 unit closer to the antenna, to make installation easier more thus reducing signal loss over antenna cabling.
- Ethernet signal travels well over CAT 5 cable but 2.4GHz signal doesn't do as well over antenna cabling.
- Ethernet cabling is much cheaper than Antenna cabling.

Chapter 2. Installation and Basic Configuration

This chapter describes the procedures of installing the OW-2000.

2.1 Before You Start

After unpacking the system, make sure the following items are present and in good condition. Refer to below pictures for product image.

1. OW-2000 Outdoor Wireless Access Point/Client Bridge unit
2. 100~240VAC, 50~60Hz AC to 48V/0.375A DC switching adapter
3. Inline Power Injector (PoE) 48VDC, 0.375A
4. RJ-45 CAT-5 Ethernet cable 30 m
5. RJ-45 CAT-5 Cross-over Ethernet cable 1.8m
6. Grounding wire 1.8m
7. User manual CD-disc
8. Wall/mast mounting kit, including one (1) band clamp
9. Screws
10. 5dBi Oimi-type Antenna (for AP)

1. Unit	2. Adapter	3. PoE	4. 30m cable
5. 1.8m cable	6. Grounding wire	7. CD	8. Wall mount
9. Screws	10. Antenna(for AP)		

2.2 Locate the OW-2000 and Inline Power Injector Ports

► **Interface on the OW-2000 Unit**

- **Ethernet Port** 1 : for connecting the 30m RJ-45 CAT-5 Ethernet cable.

► **Interface on the Inline Power Injector**

- **Data Input Port** 2 : for connecting cross-over Ethernet Cable to PC or straight Ethernet cable to Hub Switch Router .
- **DC Input Port** 3 : power adapter 48V, 0.375A DC input.
- **Power & Data Output Port** 4 : for connecting the 30m RJ-45 CAT-5 Ethernet Cable.
- **Grounding Port** 5 : for connecting grounding wire.

Device

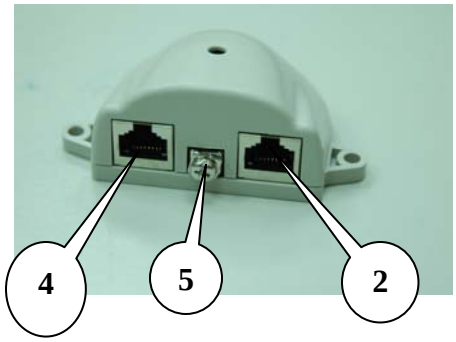

POE picture1

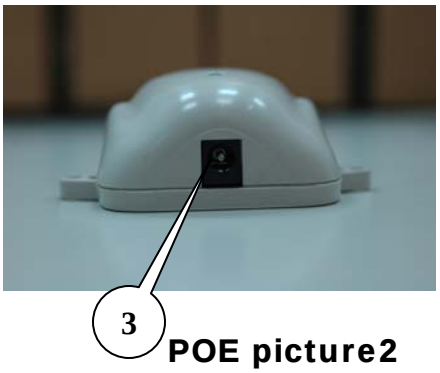

POE picture2

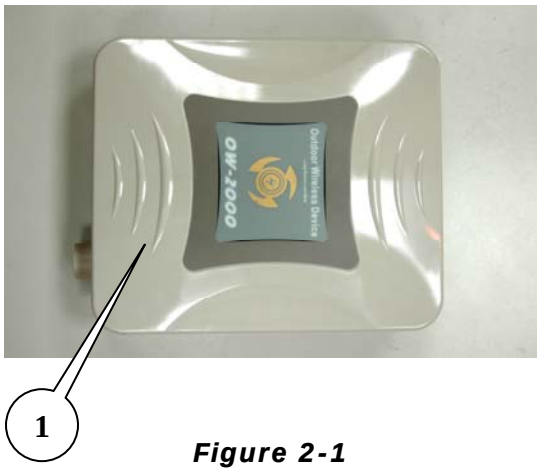

Figure 2-1
Power and Data Interface location on the PoE denoted by numbers 1-6.

► Mount OW-2000 on A Wall/Mast

The OW-2000 can be mounted on the wall, you can use the Wall Mount kit to mount the OW-2000 as shown in **Figure 2-2**.

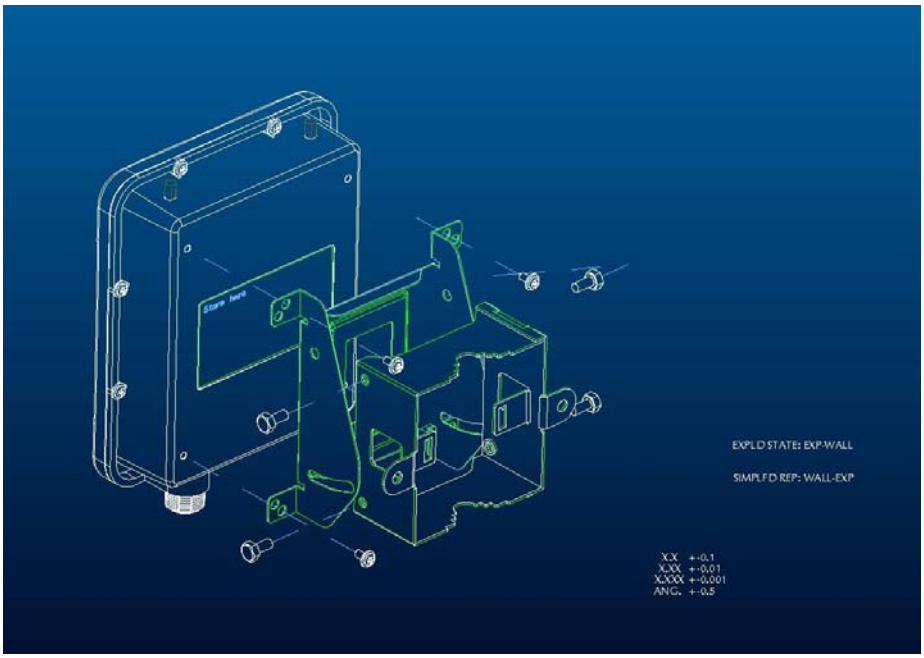

Figure 2-2

You can also mount the OW-2000 to the mast as shown in **Figure 2-3**.

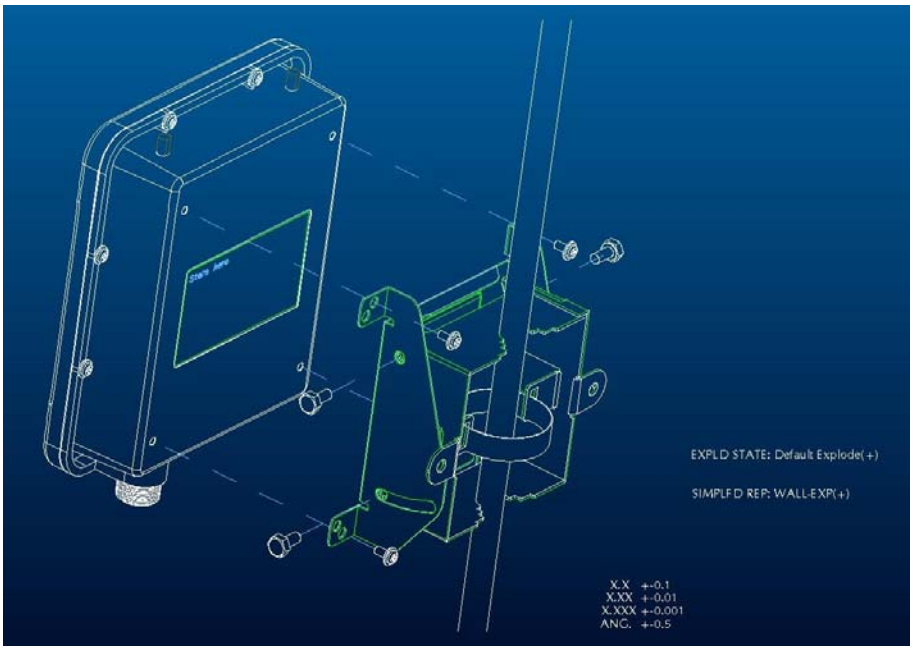

Figure 2-3

2.3 Preparing Installation

Before installing OW-2000 for outdoor application or hard-to-reach location, we recommend configuring and test all the devices first.

For configuring the OW-2000, please follow the quick steps below to power up the OW-2000. Refer to **Figure 2-4** for steps 1 through 5.

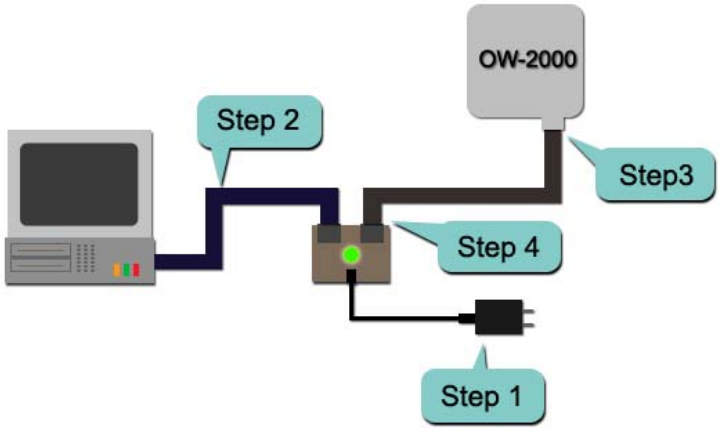

Figure 2-4

Step1 : Connect the DC plug of the AC/DC power adapter into the **DC Input Port** of Inline Power Injector and the wall-mount plug into a power outlet or power strip (refer to **page 6**). The Power LED on the Inline Power Injector will light up.

Step2 : Run the cross-over type uplink Ethernet cable from **Data Input Port** (refer to**page 6**) to the Ethernet port on a PC.

Step3 : Connect the 30m CAT 5 Ethernet cable into the OW-2000 unit. Hand tighten the connector.

Step4 : Connect the remaining end of the 30m CAT 5 cable into the PoE labeled AP/Bridge. This is the power side of the PoE that will power up the OW-2000.

When the OW-2000 receives power over the Ethernet cable, the OW-2000 will start its boot up sequence and the **Active** LED on the Inline Power Injector will light up.

You can configure the OW-2000 via HTML browser, such as Microsoft Internet Explorer or Netscape Navigator from a remote host or PC.

2.4 Basic Configuration

2.4.1 Basic Configuration Steps

This section describes a two-step BASIC configuration procedure to setup OW-2000.

Step1 : Modify the factory-default parameters on the web page "**/BASIC/LAN/**", and click **Save Settings** to save the changes, than click **Continue** .

Step2 : Modify the factory-default parameters on the web page "**/BASIC/Wireless/**", and click **Save Settings** to save the changes, than click **Reboot the Device** to take effect on the previous configuration changes.

2.4.2 Logging into the Web Interface

The OW-2000 supports access to the configuration system through the use of an HTTP Interface.

► **Web Configuration**

Before configuring OW-2000, the user needs to know the IP Address assigned to the unit. When shipped from the factory, the IP Address **192.168.1.1** was assigned to the OW-2000 by default. **To start a web connection, use http://192.168.1.1**

► **Web Access Procedures**

Once you identify the IP Address assigned to OW-2000, use web browser to configure OW-2000 through the HTTP Interface. The following procedure explains how to configure each item.

Step1 : Open your browser and enter the IP Address

Step2 : Press <**ENTER**> key and the OW-2000 **Login** screen appears as shown in **Figure 2-5**.

Figure 2-5

Step3 : Enter "**admin**" in the **Password** fields, and click **Log In** to enter the web configuration user interface screen as shown below.

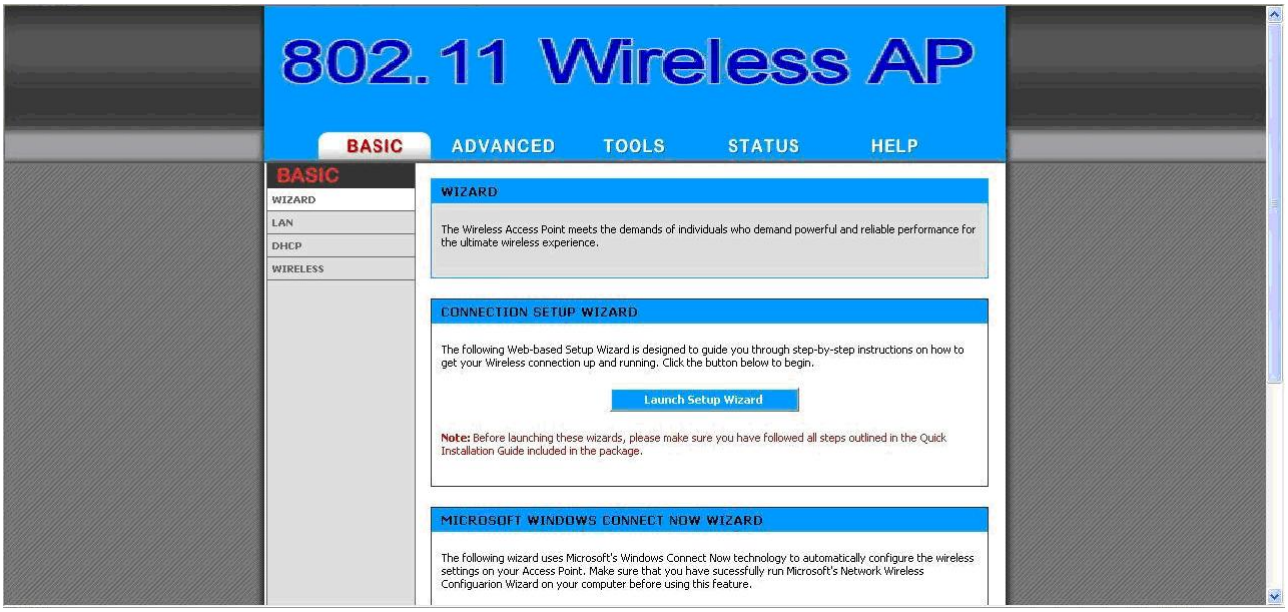

Figure 2-6

► Web Configuration Structure

The web configuration user interface shown above in **Figure 2-6** is grouped into a tree structure, and contains the following settings or information.

▽ BASIC
- WIZARD
- LAN
- DHCP
- WIRELESS

▽ ADVANCED
- MAC ADDRESS FILTER
- ADVANCED WIRELESS

▽ TOOLS
- ADMIN
- TIME
- SYSTEM
- FIRMWARE

▽ STATUS
- DEVICE INFO
- WIRELESS
- LOGS
- STATISTICS

▽ HELP
- MENU
- BASIC
- ADVANCED
- TOOLS
- STATUS
- GLOSSARY

Move through the tree by clicking on an icon to expand or collapse the tree. The nodes on the tree represent web pages that allow viewing and modifying the parameters.

2.4.3 Set Operating Mode, IP Address, Subnet Mask, Default Route IP, DNS Server IP of OW-2000

► LAN Settings

These are the settings of the LAN (Local Area Network) interface for the Access Point. The Access Point's local network (LAN) settings are configured based on the IP Address and Subnet Mask assigned in this section. The IP address is also used to access this Web-based management interface. This option is available in the "/**BASIC/LAN/**" page as shown in **Figure 2-7**.

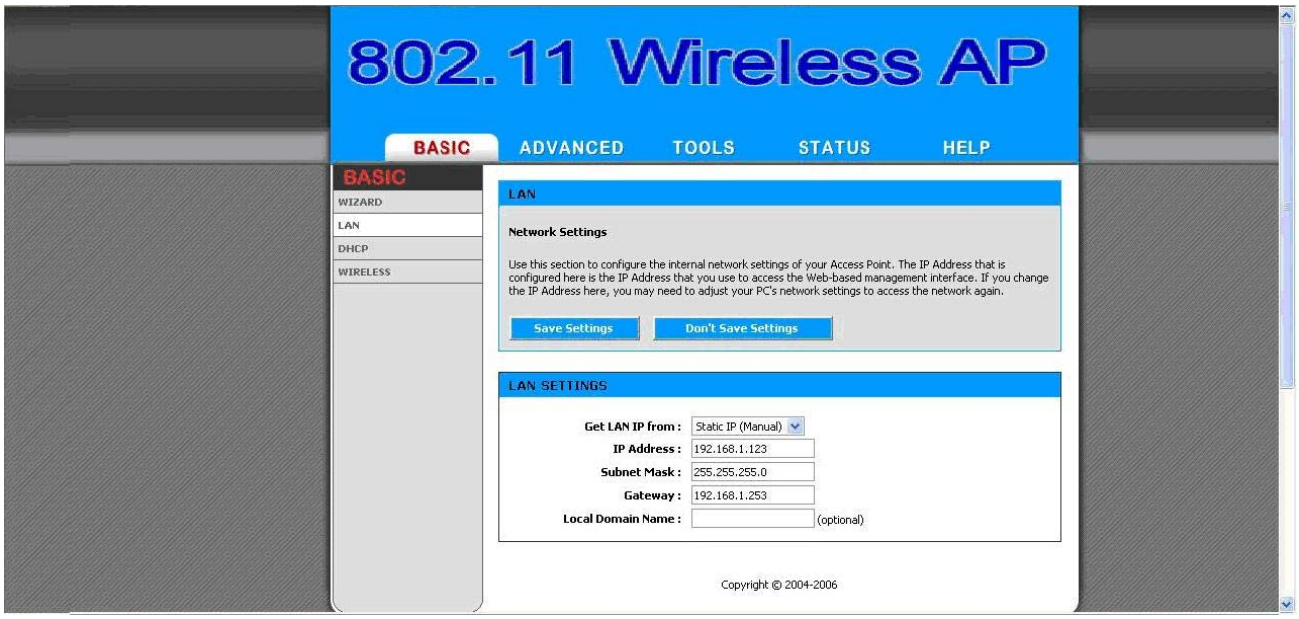

Figure 2-7

► Get LAN IP From

Choose "DHCP (Dynamic)" if your router supports DHCP and you want the router to assign an IP address to the AP. In this case, you do not need to fill in the following fields. Choose "Static IP (Manual)" if your router does not support DHCP or if for any other reason you need to assign a fixed address to the AP. In this case, you must also configure the following fields.

Note that you cannot choose "DHCP (Dynamic)" if you have enabled the "DHCP Server" option on the DHCP page; the AP cannot be both a DHCP client and a DHCP server.

► IP Address

The IP address of the AP on the local area network. Assign any unused IP address in the range of IP addresses available for the LAN. For example, 192.168.0.1.

► Subnet Mask

The subnet mask of the local area network.

► Gateway

The IP address of the router on the local area network.

► Local Domain Name

This entry is optional. Enter a domain name for the local network. The AP's DHCP server will give this domain name to the computers on the wireless LAN. So, for example, if you enter mynetwork.net here, and you have a wireless laptop with a name of chris, that laptop will be known as chris.mynetwork.net. Note, however, if the AP's settings specify "DHCP (Dynamic)" Address, and the router's DHCP server assigns a domain name to the AP, that domain name will override any name you enter here.

2.4.4 Set Wireless SSID for Wireless Interface

► **Wireless Network Name （Also called the SSID）**

When you are browsing for available wireless networks, this is the name that will appear in the list (unless Visibility Status is set to Invisible, see below). This name is also referred to as the SSID. For security purposes, it is highly recommended to change from the pre-configured network name. This option is available in the "/**BASIC/WIRELESS/**" page as shown in **Figure 2-8**

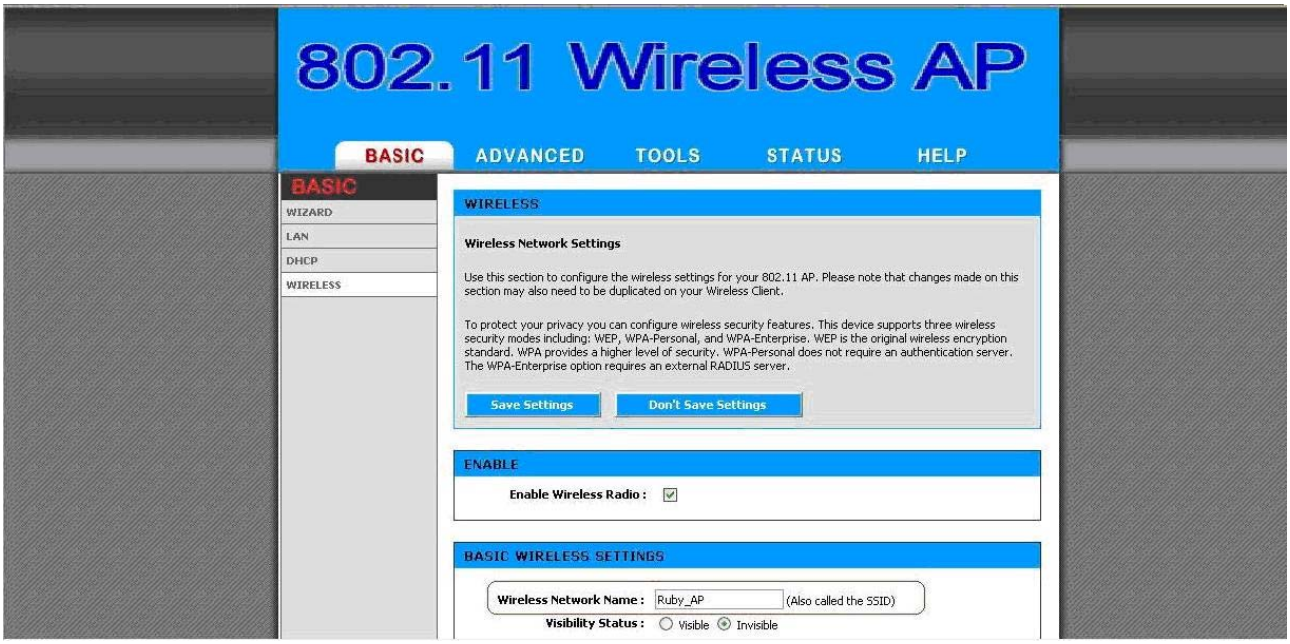

Figure 2-8

2.4.5 Set Wireless Encryption for Wireless Interface

The OW-2000 supports 64-bit and 128-bit WEP encryption.

For **64-bit** WEP encryption, an encryption key is 10 hexadecimal characters (0-9 and A-F) or 5 ASCII characters.

For **128-bit** WEP encryption, an encryption key is 26 hexadecimal characters or 13 ASCII characters.

Modify the WEP encryption parameters on the web page "/**BASIC/WIRELESS/WIRELESS SECURITY MODE**". Choice "WEP" Enter 1~15 characters into the **WEP Key** field, than click **Save Setting** , **Reboot the Device**.

2.4.6 Change Supervisor Account & Password

Enter the **TOOLS** > **ADMIN** page. **Figure 2-9** below shows the **TOOLS / ADMIN** page.

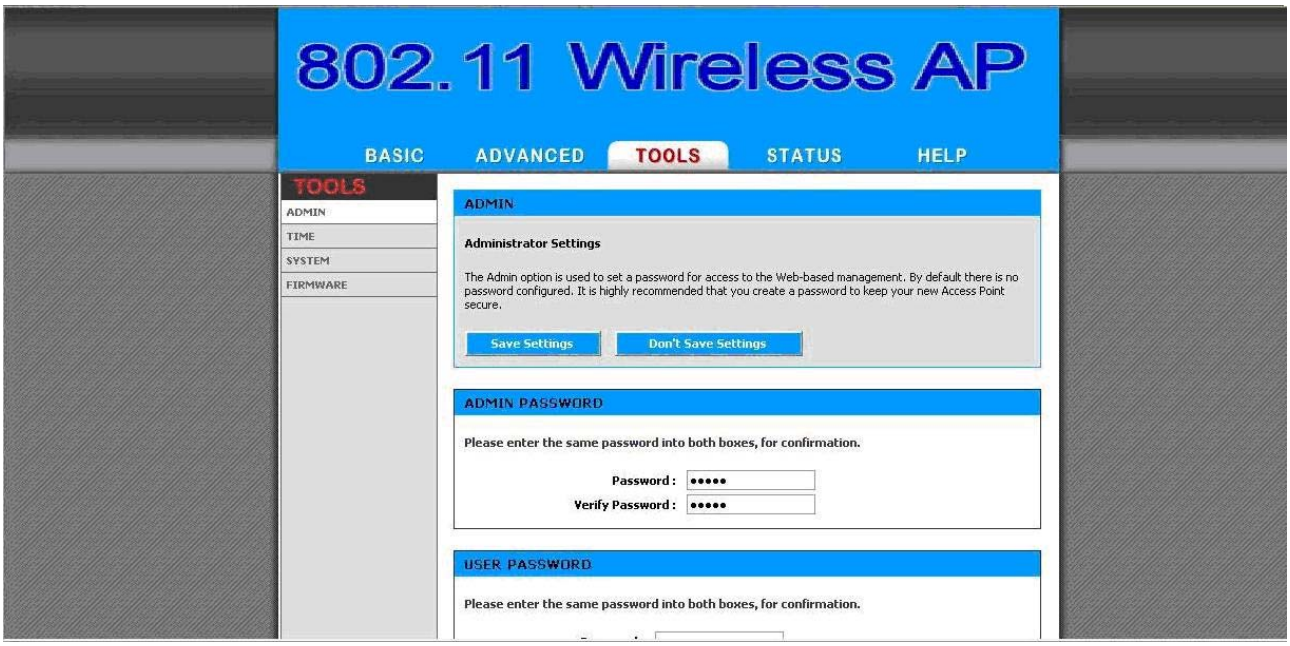

Figure 2-9

► **ADMIN PASSWORD**

Change the ADMIN PASSWORD's user name and password in the **ADMIN PASSWORD Account** field, and click **Save Setting** , than **Reboot the Device**. to take effect on the previous configuration changes.

2.4.7 Upgrade the Firmware

► Update the Firmware

Enter the **TOOLS** > **FIRMWARE** page as shown in **Figure 2-10** to upgrade OW-2000. Here, user must select which file you want to upgrade it (**Program image**), then click **Upload** button to start the upgrade process.

Hint: It takes about 1 min, to complete the restart process.

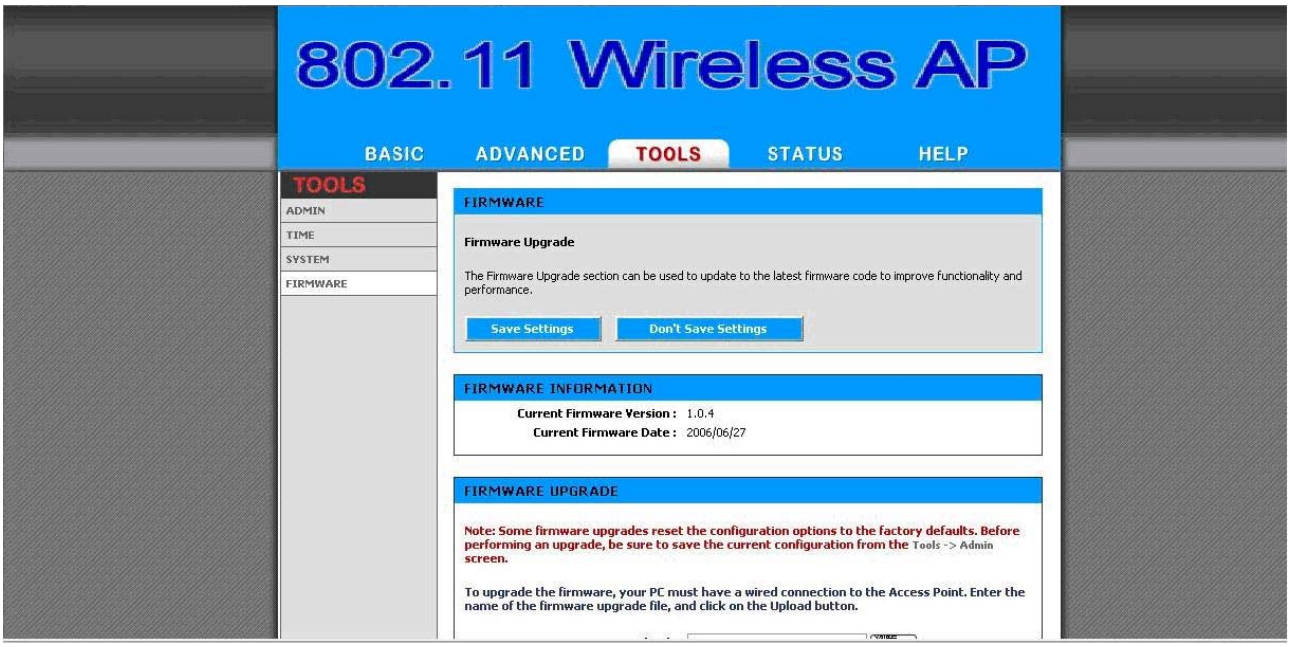

Figure 2-10

⚠ **Caution** The Part 15 radio device operates on a non-interference basis with other devices operating at this frequency when using integrated antennas. Any changes or modification to the product not expressly approved by Original Manufacture could void the user's authority to operate this device.

⚠ **Caution** To meet regulatory restrictions and the safety of the installation, strongly recommends this product to be **professionally installed**.

Chapter 3. Network Topologies

This chapter describes several common types of installations implemented by using the OW-2000's line of Outdoor Wireless System. This is by no means intended to be an exhaustive list of all possible configurations, but rather shows examples of some of the more common implementations. The OW-2000 CB can be configured to function as a Wireless Client Router or Bridge to a central access point like the OW-2000 AP see Figure 3-1 below.

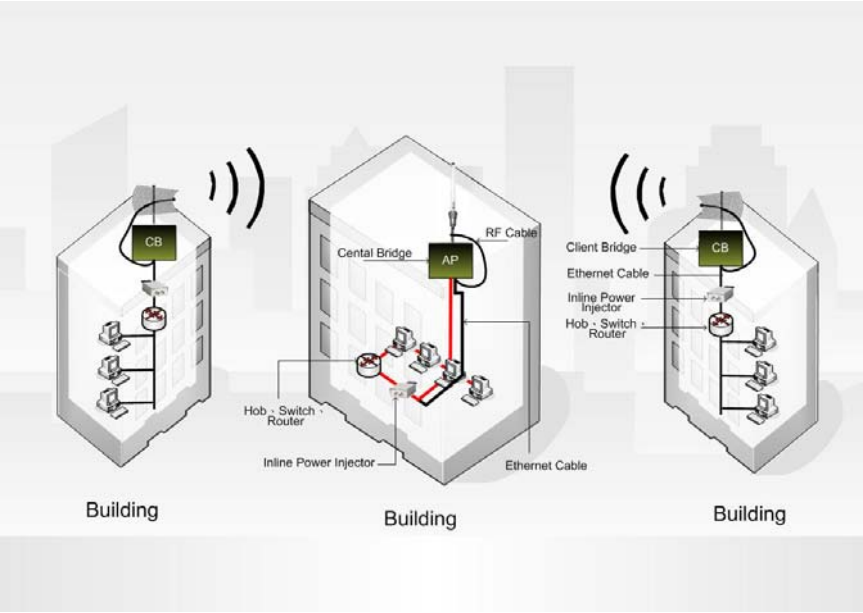

Figure 3-1

The OW-2000 CB performs in either router or bridge mode. In a Point-to-Multipoint topology, all communication between network systems is done through a centralized agent. Among the OW-2000 Outdoor Wireless Bridge products, the centralized agent is Central Bridge (OW-2000 AP) and the individual network notes may be Bridge (OW-2000 CB).

To show the available Point-to-Multipoint topologies, the following examples are provided.

Wireless Client Bridge-to-Central Wireless Bridge

3.1 Wireless Client Bridge-to-Central Wireless Bridge

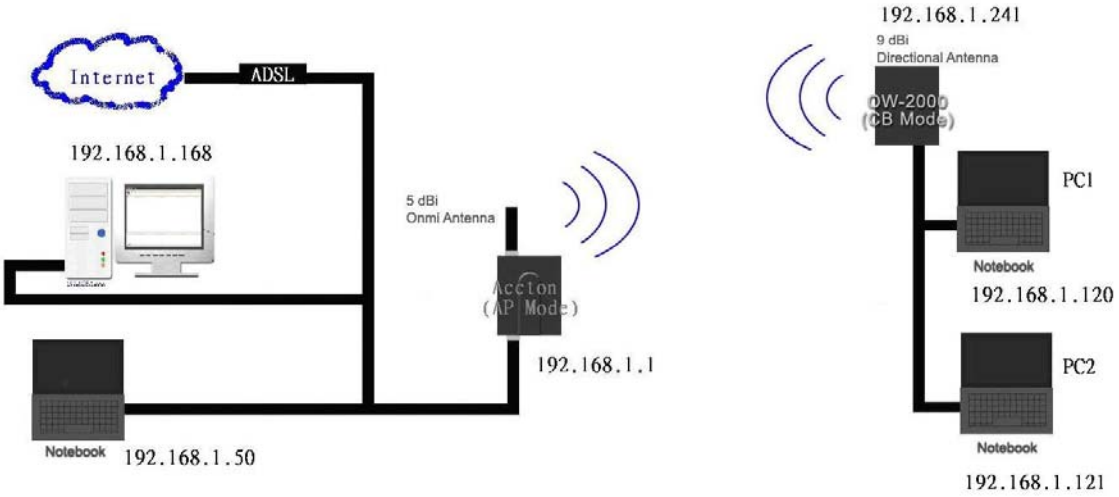

Figure 3-2

Refer to Figure 3-2 for the following setup.

Note: The OW-2000 AP is the Central Wireless Bridge and OW-2000 CB is the Wireless Client Bridge

Step 1 Set the OW-2000 AP to perform a bridge (**bridge IP address: 192.168.1.1**).

Step 2 Set Wireless parameters on the AP11 to: **Channel (1)** and **SSID (wireless)**

Step 3 Set the OW-2000 CB to function in the bridge mode (**bridge IP address: 192.168.1.241**).

Step 4 Set Wireless parameters on the OW-2000 CB to: **Channel (1)** and **SSID (wireless)**, and these parameters must be the same with COU.

Step 5 Left side subnet is transparent to the right side.

Step 6 DHCP server assign IP address to PC1 and PC2

Chapter 4. All function on Device

4.1 BASIC

4.1.1 Wizard

This wizard guides you through the following basic Access Point setup steps:

- Set your Password
- Select your Time Zone
- Configure your Wireless Connection

WCN Wizard

If your PC's operating system is Windows XP Service Pack 2 (SP2) or later and you are using Windows Internet Explorer (IE) as your browser, you can use Windows Connect Now (WCN) technology to help configure the Access Point's wireless security settings.

Wireless Network Setup Wizard

Before you can use the Access Point's WCN Wizard, you must first execute the Wireless Network Setup Wizard on your PC. If you have not already done so, go to the Windows Control Panel and select Wireless Network Setup Wizard. When the Wireless Network Setup Wizard gives you the choice to "Use a USB flash drive" or "Set up a network manually", choose the latter. (In fact, you will not have to do the set-up manually; it will be done with the WCN ActiveX Control.)

WCN ActiveX Control

The WCN ActiveX Control provides the WCN link between your PC and the Access Point via the browser that communicates wireless configuration data without a USB flash drive. The browser will attempt to download the WCN ActiveX Control, if it is not already available on your PC. For this action to succeed, you must already have a WAN connection, and the browser's internet security setting must be Medium or lower (select Tools -> Internet Options -> Security -> Custom Level -> Medium).

When the necessary preparations are complete, the WCN technology will propagate the wireless network settings from your PC to the Access Point. Then you will have to reboot the Access Point for the settings to take effect.

Note that WCN only sets a few of the wireless options. You will still need to go to the Home -> Wireless page to set other wireless options such as Super G Mode and transmission rate.

Wireless Security Setup Wizard

This wizard guides you through the following steps for setting up security for your wireless network:

- Name your Wireless Network
- Secure your Wireless Network

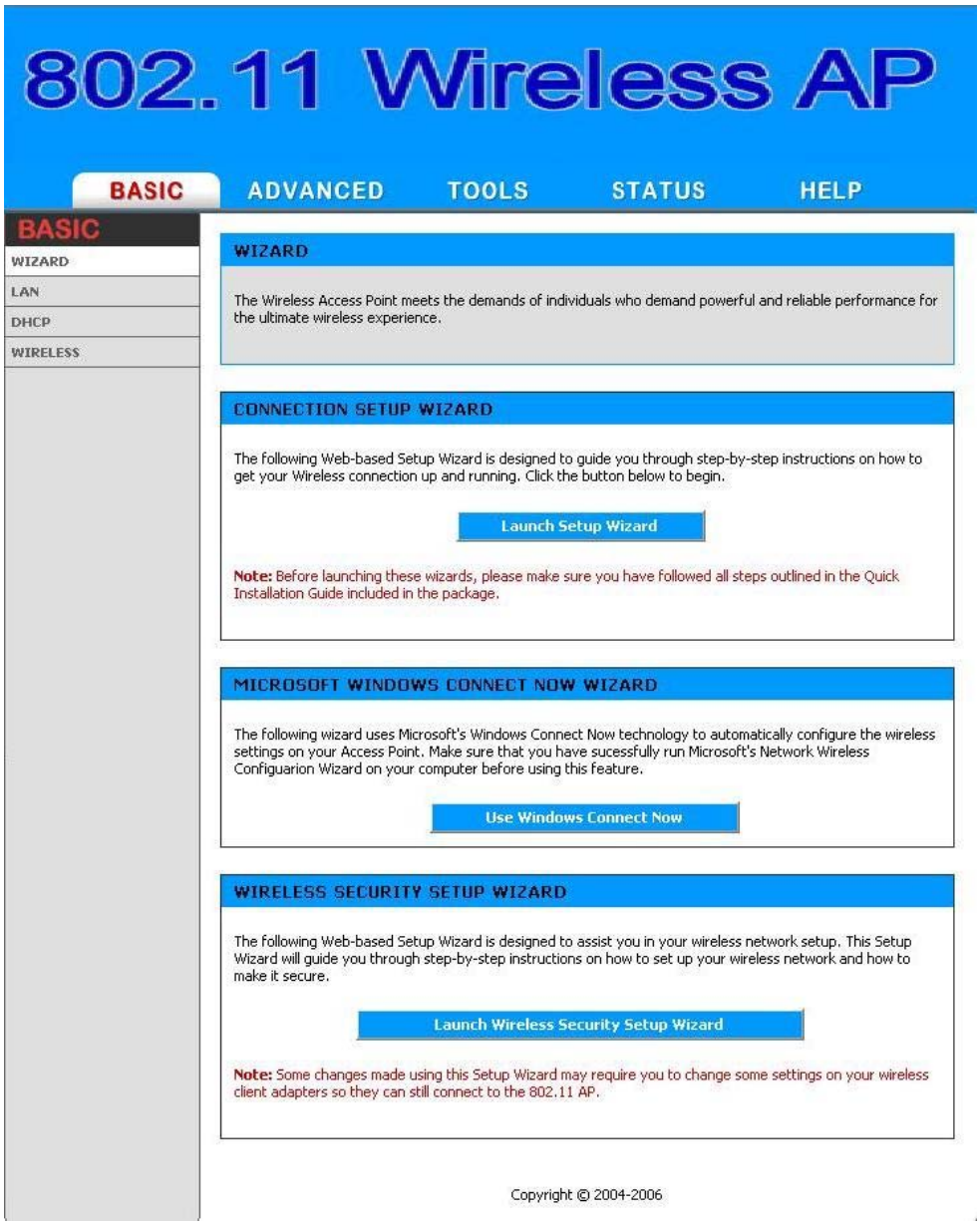

Figure 4-1

4.1.2 LAN

These are the settings of the LAN (Local Area Network) interface for the Access Point. The Access Point's local network (LAN) settings are configured based on the IP Address and Subnet Mask assigned in this section. The IP address is also used to access this Web-based management interface.

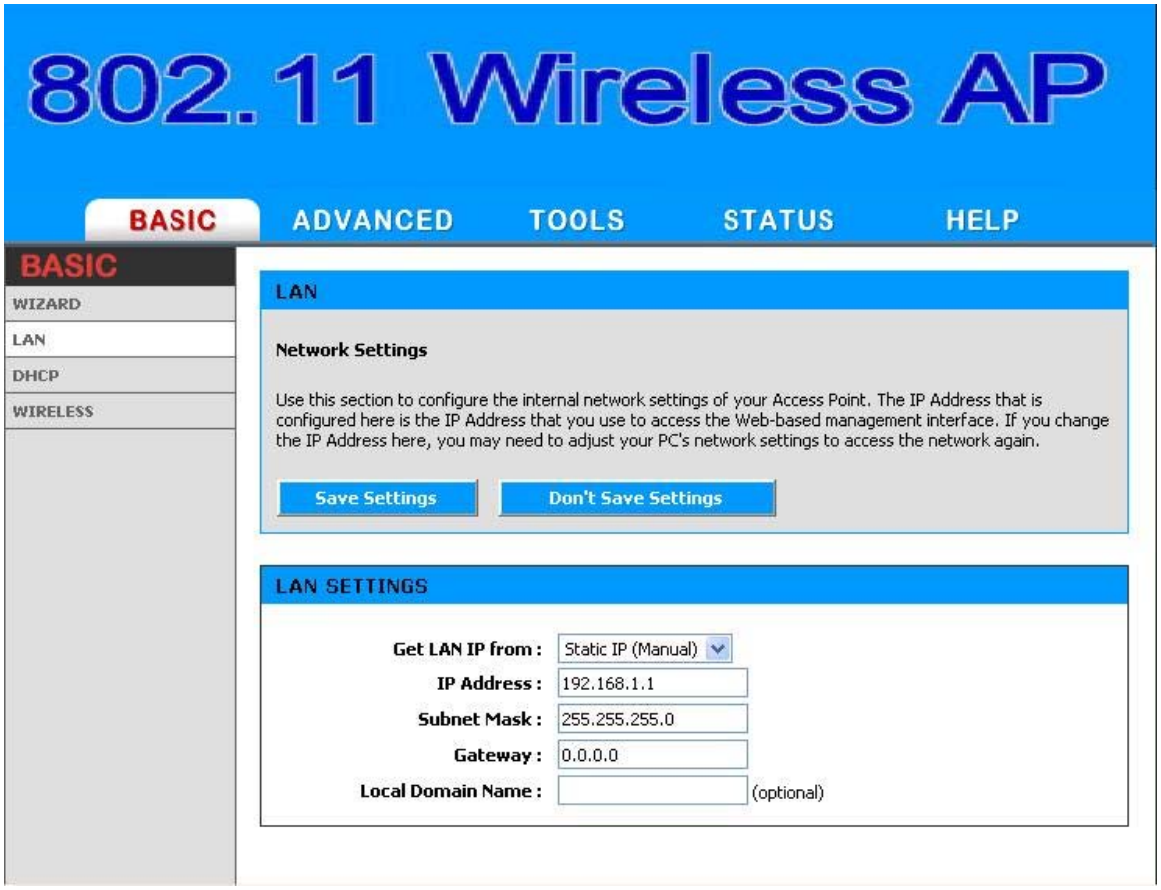

Figure 4-2

Get LAN IP From

Choose "DHCP (Dynamic)" if your router supports DHCP and you want the router to assign an IP address to the AP. In this case, you do not need to fill in the following fields. Choose "Static IP (Manual)" if your router does not support DHCP or if for any other reason you need to assign a fixed address to the AP. In this case, you must also configure the following fields.

Note that you cannot choose "DHCP (Dynamic)" if you have enabled the "DHCP Server" option on the DHCP page; the AP cannot be both a DHCP client and a DHCP server.

IP Address

The IP address of the AP on the local area network. Assign any unused IP address in the range of IP addresses available for the LAN. For example, 192.168.1.101.

Subnet Mask

The subnet mask of the local area network.

Gateway

The IP address of the router on the local area network.

Local Domain Name

This entry is optional. Enter a domain name for the local network. The AP's DHCP server will give this domain name to the computers on the wireless LAN. So, for example, if you enter **mynetwork.net** here, and you have a wireless laptop with a name of **chris**, that laptop will be known as **chris.mynetwork.net**. Note, however, if the AP's settings specify "DHCP (Dynamic)" Address, and the router's DHCP server assigns a domain name to the AP, that domain name will override any name you enter here.

4.1.3 DHCP

DHCP stands for Dynamic Host Configuration Protocol. The DHCP section is where you configure the built-in DHCP Server to assign IP addresses to the computers and other devices on your local area network (LAN).

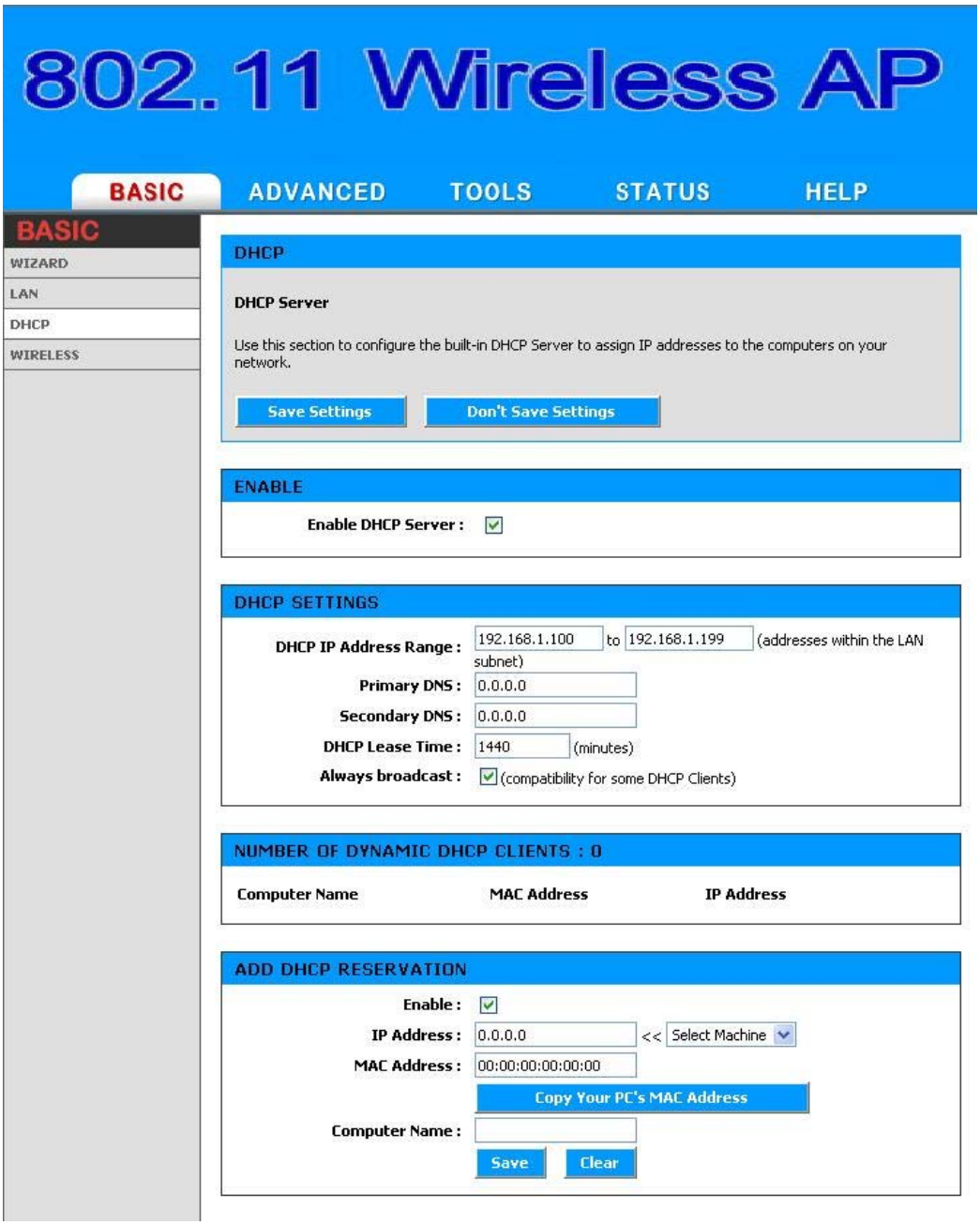

Figure 4-3

Enable DHCP Server

In most situations, the router provides DHCP services, and you can leave this option disabled. However, if for any reason the router does not provide DHCP services, enable this option. The AP's DHCP Server will then manage the IP addresses and other network configuration information for wireless clients associated with the AP.

The computers (and other devices) connected to your LAN also need to have their TCP/IP configuration set to "DHCP" or "Obtain an IP address automatically".

When you set **Enable DHCP Server**, the following options are displayed.

DHCP IP Address Range

These two IP values (*from* and *to*) define a range of IP addresses that the DHCP Server uses when assigning addresses to computers and devices on your Local Area Network. Any addresses that are outside of this range are not managed by the DHCP Server; these could, therefore, be used for manually configured devices or devices that cannot use DHCP to obtain network address details automatically.

It is possible for a computer or device that is manually configured to have an address that does reside within this range. In this case the address should be reserved (see Static DHCP Client below), so that the DHCP Server knows that this specific address can only be used by a specific computer or device.

Your Access Point, by default, has a static IP address of 192.168.1.1. This means that addresses 192.168.1.2 to 192.168.1.254 can be made available for allocation by the DHCP Server.

Example:

Your Access Point uses 192.168.1.1 for the IP address. You've assigned a computer that you want to designate as a Web server with a static IP address of 192.168.1.3. You've assigned another computer that you want to designate as an FTP server with a static IP address of 192.168.1.4. Therefore the starting IP address for your DHCP IP address range needs to be 192.168.1.5 or greater.

Example:

Suppose you configure the DHCP Server to manage addresses From 192.168.1.100 To 192.168.1.199. This means that 192.168.1.3 to 192.168.1.99 and 192.168.1.200 to 192.168.1.254 are NOT managed by the DHCP Server. Computers or devices that use addresses from these ranges are to be

manually configured. Suppose you have a web server computer that has a manually configured address of 192.168.1.100. Because this falls within the "managed range" be sure to create a reservation for this address and match it to the relevant computer (see Static DHCP Client below).

DHCP Lease Time

The amount of time that a computer may have an IP address before it is required to renew the lease. The lease functions just as a lease on an apartment would. The initial lease designates the amount of time before the lease expires. If the tenant wishes to retain the address when the lease is expired then a new lease is established. If the lease expires and the address is no longer needed than another tenant may use the address.

Always Broadcast

If all the computers on the LAN successfully obtain their IP addresses from the Access Point's DHCP server as expected, this option can remain disabled. However, if one of the computers on the LAN fails to obtain an IP address from the Access Point's DHCP server, it may have an old DHCP client that incorrectly turns off the broadcast flag of DHCP packets. Enabling this option will cause the Access Point to always broadcast its responses to all clients, thereby working around the problem, at the cost of increased broadcast traffic on the LAN.

Number of Dynamic DHCP Clients

In this section you can see what LAN devices are currently leasing IP addresses.

Revoke: The **Revoke** option is available for the situation in which the lease table becomes full or nearly full, you need to recover space in the table for new entries, and you know that some of the currently allocated leases are no longer needed. Clicking **Revoke** cancels the lease for a specific LAN device and frees an entry in the lease table. Do this only if the device no longer needs the leased IP address, because, for example, it has been removed from the network.

Add / Edit DHCP Reservation

This option lets you reserve IP addresses, and assign the same IP address to the network device with the specified MAC address any time it requests an IP address. This is almost the same as when a device has a static IP address except that the device must still request an IP address from the Access Point. The Access Point will provide the device the same IP address every time. DHCP

Reservations are helpful for server computers on the local network that are hosting applications such as Web and FTP. Servers on your network should either use a static IP address or use this option.

MAC Address: To input the MAC address of your system, enter it in manually or connect to the Access Point's Web-Management interface from the system and click the **Copy Your PC's MAC Address** button.

A MAC address is usually located on a sticker on the bottom of a network device. The MAC address is comprised of twelve digits. Each pair of hexadecimal digits are usually separated by dashes or colons such as 00-0D-88-11-22-33 or 00:0D:88:11:22:33. If your network device is a computer and the network card is already located inside the computer, you can connect to the Access Point from the computer and click the **Copy Your PC's MAC Address** button to enter the MAC address.

As an alternative, you can locate a MAC address in a specific operating system by following the steps below:

Windows 98 Windows Me	Go to the Start menu, select Run, type in **winipcfg**, and hit Enter. A popup window will be displayed. Select the appropriate adapter from the pull-down menu and you will see the Adapter Address. This is the MAC address of the device.
Windows 2000 Windows XP	Go to your Start menu, select Programs, select Accessories, and select Command Prompt. At the command prompt type **ipconfig /all** and hit Enter. The physical address displayed for the adapter connecting to the Access Point is the MAC address.
Mac OS X	Go to the Apple Menu, select System Preferences, select Network, and select the Ethernet Adapter connecting to the Access Point. Select the Ethernet button and the Ethernet ID will be listed. This is the same as the MAC address.

Computer Name: You can assign a name for each computer that is given a reserved IP address. This may help you keep track of which computers are assigned this way.

Example:

Game Server

DHCP Reservations List

This shows clients that you have specified to have reserved DHCP addresses. An entry can be changed by clicking the Edit icon, or

deleted by clicking the Delete icon. When you click the Edit icon, the item is highlighted, and the "Edit DHCP Reservation" section is activated for editing.

4.1.4 WIRELESS

The wireless section is used to configure the wireless settings for your Access Point. Please note that changes made on this section may also need to be duplicated on your Wireless Client.

To protect your privacy, use the wireless security mode to configure the wireless security features. This device supports three wireless security modes including: WEP, WPA-Personal, and WPA-Enterprise. WEP is the original wireless encryption standard. WPA provides a higher level of security. WPA-Personal does not require an authentication server. The WPA-Enterprise option does require a RADIUS authentication server.

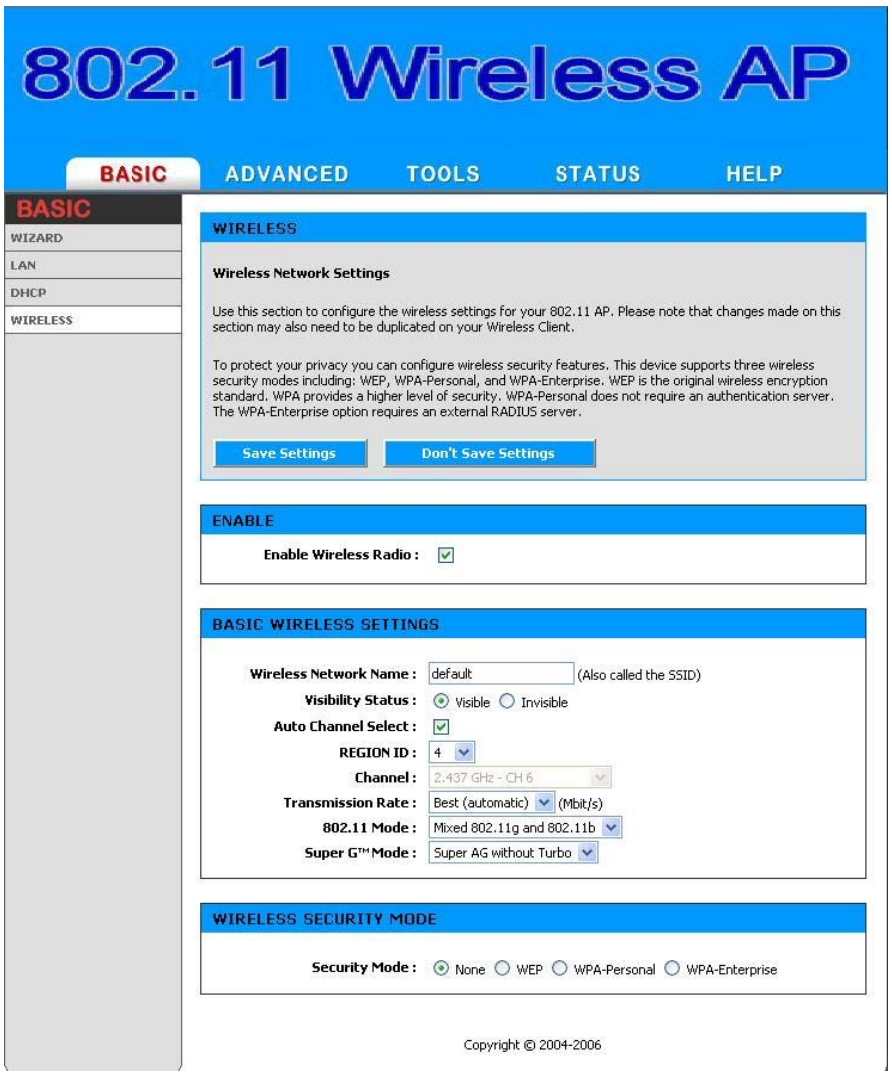

Figure 4-4

Enable Wireless Radio

This option turns off and on the wireless connection feature of the Access Point. When you set this option, the following parameters are displayed.

Wireless Network Name

When you are browsing for available wireless networks, this is the name that will appear in the list (unless Visibility Status is set to Invisible, see below). This name is also referred to as the SSID. For security purposes, it is highly recommended to change from the pre-configured network name.

Visibility Status

The Invisible option allows you to hide your wireless network. When this option is set to Visible, your wireless network name is broadcast to anyone within the range of your signal. If you're not using encryption then they could connect to your network. When Invisible mode is enabled, you must enter the Wireless Network Name (SSID) on the client manually to connect to the network.

REGION ID

By default the value 4 will be selected. The default value 4 represents FCC1_FCCA (USA). You have the option of selecting the region id if necessary. 1: For 11b-only countries, 2: Israel, 4: USA, 5: Hong Kong, 6: Canada, 7: Australia, 10: France, 11: Bulgaria, 12: Hungary & others, 13: France & others, 116; Japan, 17: Japan, 18: Singapore, 19:Japan with 4.9G channels, 20: Korea, 22: Korea with 2.3G channels, 23: Latin America, 25: Venezuela, 26 World0 (WO0 SKU), 27: World1 (WO1 SKU), 28: World2 (WO2 SKU), 29: World3 (WO3 SKU), 30: World4 (WO4 SKU), 31: World5 (W05 SKU).

Auto Channel Select

If you select this option, the Access Point automatically finds the channel with least interference and uses that channel for wireless networking. If you disable this option, the Access Point uses the channel that you specify with the following **Channel** option.

Channel

A wireless network uses specific channels in the 2.4GHz wireless spectrum to handle communication between clients. Some channels in your area may have interference from other electronic devices. Choose the clearest channel to help optimize the performance and coverage of your wireless network.

Transmission Rate

By default the fastest possible transmission rate will be selected. You have the option of selecting the speed if necessary.

802.11 Mode

If all of the wireless devices you want to connect with this Access Point can connect in 802.11g mode, you can improve performance slightly by changing the mode to 802.11g only. If you have some devices that are 802.11b, leave the setting at Mixed.

Super G™ Mode

Super G without Turbo: Performance enhancing features such as Packet Bursting, FastFrames, and Compression.

WEP

A method of encrypting data for wireless communication intended to provide the same level of privacy as a wired network. WEP is not as secure as WPA encryption. To gain access to a WEP network, you must know the key. The key is a string of characters that you create. When using WEP, you must determine the level of encryption. The type of encryption determines the key length. 128-bit encryption requires a longer key than 64-bit encryption. Keys are defined by entering in a string in HEX (hexadecimal - using characters 0-9, A-F) or ASCII (American Standard Code for Information Interchange - alphanumeric characters) format. ASCII format is provided so you can enter a string that is easier to remember. The ASCII string is converted to HEX for use over the network. Four keys can be defined so that you can change keys easily. A default key is selected for use on the network.

Example:

64-bit hexadecimal keys are exactly 10 characters in length. (12345678FA is a valid string of 10 characters for 64-bit encryption.)

128-bit hexadecimal keys are exactly 26 characters in length. (456FBCDF123400122225271730 is a valid string of 26 characters for 128-bit encryption.)

64-bit ASCII keys are up to 5 characters in length (DMODE is a valid string of 5 characters for 64-bit encryption.)

128-bit ASCII keys are up to 13 characters in length (2002HALOSWIN1 is a valid string of 13 characters for 128-bit encryption.)

WPA-Personal and WPA-Enterprise

Both of these options select some variant of Wi-Fi Protected Access (WPA) -- security standards published by the Wi-Fi Alliance. The **WPA Mode** further refines the variant that the Access Point should employ.

WPA Mode: WPA is the older standard; select this option if the clients that will be used with the Access Point only support the older standard. WPA2 is the newer implementation of the stronger IEEE 802.11i security standard. With the "WPA2" option, the Access Point tries WPA2 first, but falls back to WPA if the client only supports WPA. With the "WPA2 Only" option, the Access Point associates only with clients that also support WPA2 security.

Cipher Type: The encryption algorithm used to secure the data communication. TKIP (Temporal Key Integrity Protocol) provides per-packet key generation and is based on WEP. AES (Advanced Encryption Standard) is a very secure block based encryption. With the "TKIP and AES" option, the Access Point negotiates the cipher type with the client, and uses AES when available.

Group Key Update Interval: The amount of time before the group key used for broadcast and multicast data is changed.

WPA-Personal

This option uses Wi-Fi Protected Access with a Pre-Shared Key (PSK).

Pre-Shared Key: The key is entered as a pass-phrase of up to 63 alphanumeric characters in ASCII (American Standard Code for Information Interchange) format at both ends of the wireless connection. It cannot be shorter than eight characters, although for proper security it needs to be of ample length and should not be a commonly known phrase. This phrase is used to generate session keys that are unique for each wireless client.

Example:

Wireless Networking technology enables ubiquitous communication

WPA-Enterprise

This option works with a RADIUS Server to authenticate wireless clients. Wireless clients should have established the necessary credentials before attempting to authenticate to the Server through this Gateway. Furthermore, it may be necessary to configure the RADIUS Server to allow this Gateway to authenticate users.

Authentication Timeout: Amount of time before a client will be required to re-authenticate.

RADIUS Server IP Address: The IP address of the authentication server.

RADIUS Server Port: The port number used to connect to the authentication server.

RADIUS Server Shared Secret: A pass-phrase that must match with the authentication server.

MAC Address Authentication: If this is selected, the user must connect from the same computer whenever logging into the wireless network.

Advanced:

Optional Backup RADIUS Server

This option enables configuration of an optional second RADIUS server. A second RADIUS server can be used as backup for the primary RADIUS server. The second RADIUS server is consulted only when the primary server is not available or not responding. The fields **Second RADIUS Server IP Address**, **RADIUS Server Port**, **Second RADIUS server Shared Secret**, **Second MAC Address Authentication** provide the corresponding parameters for the second RADIUS Server.

4.2 ADVANCED

4.2.1 MAC Address Filter

The MAC address filter section can be used to filter network access by machines based on the unique MAC addresses of their network adapter(s). It is most useful to prevent unauthorized wireless devices from connecting to your network. A MAC address is a unique ID assigned by the manufacturer of the network adapter.

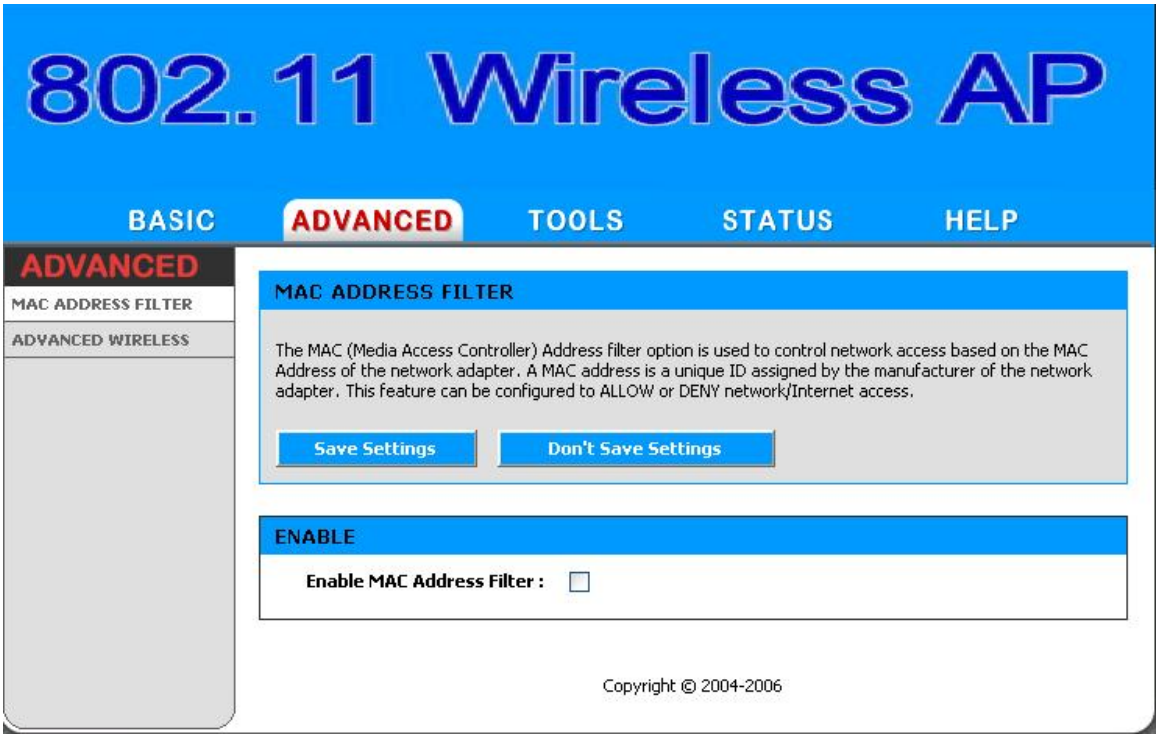

Figure 4-5

Enable MAC Address Filter

When this is enabled, computers are granted or denied network access depending on the mode of the filter.

Note: Misconfiguration of this feature can prevent any machine from accessing the network. In such a situation, you can regain access by activating the factory defaults button on the Access Point itself.

Filter Settings

Mode

When "only allow listed machines" is selected, only computers with MAC addresses listed in the MAC Address List are granted network access. When "only deny listed machines" is selected, any computer with a MAC address listed in the MAC Address List is refused access to the network.

Filter Wireless Clients

When this is selected, the MAC address filters will be applied to wireless network clients.

Filter Wired Clients

When this is selected, the MAC address filters will be applied to wired network clients.

Add / Edit MAC Address

In this section, you can add entries to the MAC Address List below, or edit existing entries.

Enable

MAC address entries can be activated or deactivated with this checkbox.

MAC Address

Enter the MAC address of the desired computer or connect to the Access Point from the desired computer and click the button.

Save

Saves the new or edited MAC Address entry in the following list. When finished updating the MAC Address List, you must still click the button at the top of the page to make the changes effective and permanent.

MAC Address List

The section lists the current MAC Address filters. A MAC Address entry can be changed by clicking the Edit icon, or deleted by clicking the Delete icon. When you click the Edit icon, the item is highlighted, and the "Edit MAC Address" section is activated for editing.

4.2.2 Advance Wireless

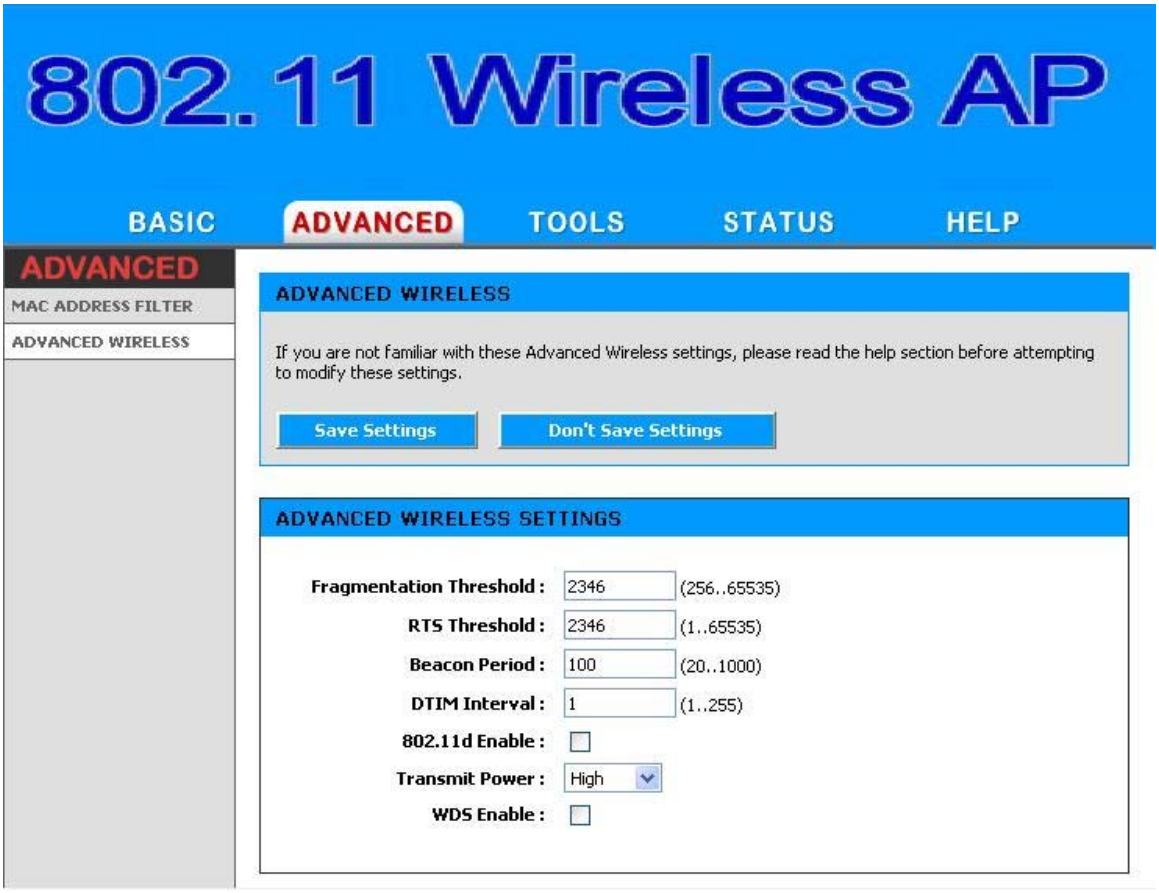

Figure 4-6

Fragmentation Threshold

This setting should remain at its default value of 2346. Setting the Fragmentation value too low may result in poor performance.

RTS Threshold

This setting should remain at its default value of 2346. If you encounter inconsistent data flow, only minor modifications to the value are recommended.

Beacon Period

Beacons are packets sent by a wireless Access Point to synchronize wireless devices. Specify a Beacon Period value between 20 and 1000. The default value is set to 100 milliseconds.

DTIM Interval

A DTIM is a countdown informing clients of the next window for listening to broadcast and multicast messages. When the wireless

Access Point has buffered broadcast or multicast messages for associated clients, it sends the next DTIM with a DTIM Interval value. Wireless clients detect the beacons and awaken to receive the broadcast and multicast messages. The default value is 1. Valid settings are between 1 and 255.

802.11d Enable

Enables 802.11d operation. 802.11d is a wireless specification for operation in additional regulatory domains. This supplement to the 802.11 specifications defines the physical layer requirements (channelization, hopping patterns, new values for current MIB attributes, and other requirements to extend the operation of 802.11 WLANs to new regulatory domains (countries). The current 802.11 standard defines operation in only a few regulatory domains (countries). This supplement adds the requirements and definitions necessary to allow 802.11 WLAN equipment to operate in markets not served by the current standard. Enable this option if you are operating in one of these "additional regulatory domains".

Transmit Power

Normally the wireless transmitter operates at 100% power. In some circumstances, however, there might be a need to isolate specific frequencies to a smaller area. By reducing the power of the radio, you can prevent transmissions from reaching beyond your corporate/home office or designated wireless area.

WDS Enable

When WDS is enabled, this access point functions as a wireless repeater and is able to wirelessly communicate with other APs via WDS links. Note that WDS is incompatible with WPA -- both features cannot be used at the same time. A WDS link is bidirectional; so this AP must know the MAC Address (creates the WDS link) of the other AP, and the other AP must have a WDS link back to this AP. Make sure the APs are configured with same channel number.

WDS AP MAC Address

Specifies one-half of the WDS link. The other AP must also have the MAC address of this AP to create the WDS link back to this AP.

4.3 TOOLS

4.3.1 Admin

The Admin option is used to set a password for access to the Web-based management. By default there is no password configured. It is highly recommended that you create a password to keep your new Access Point secure.

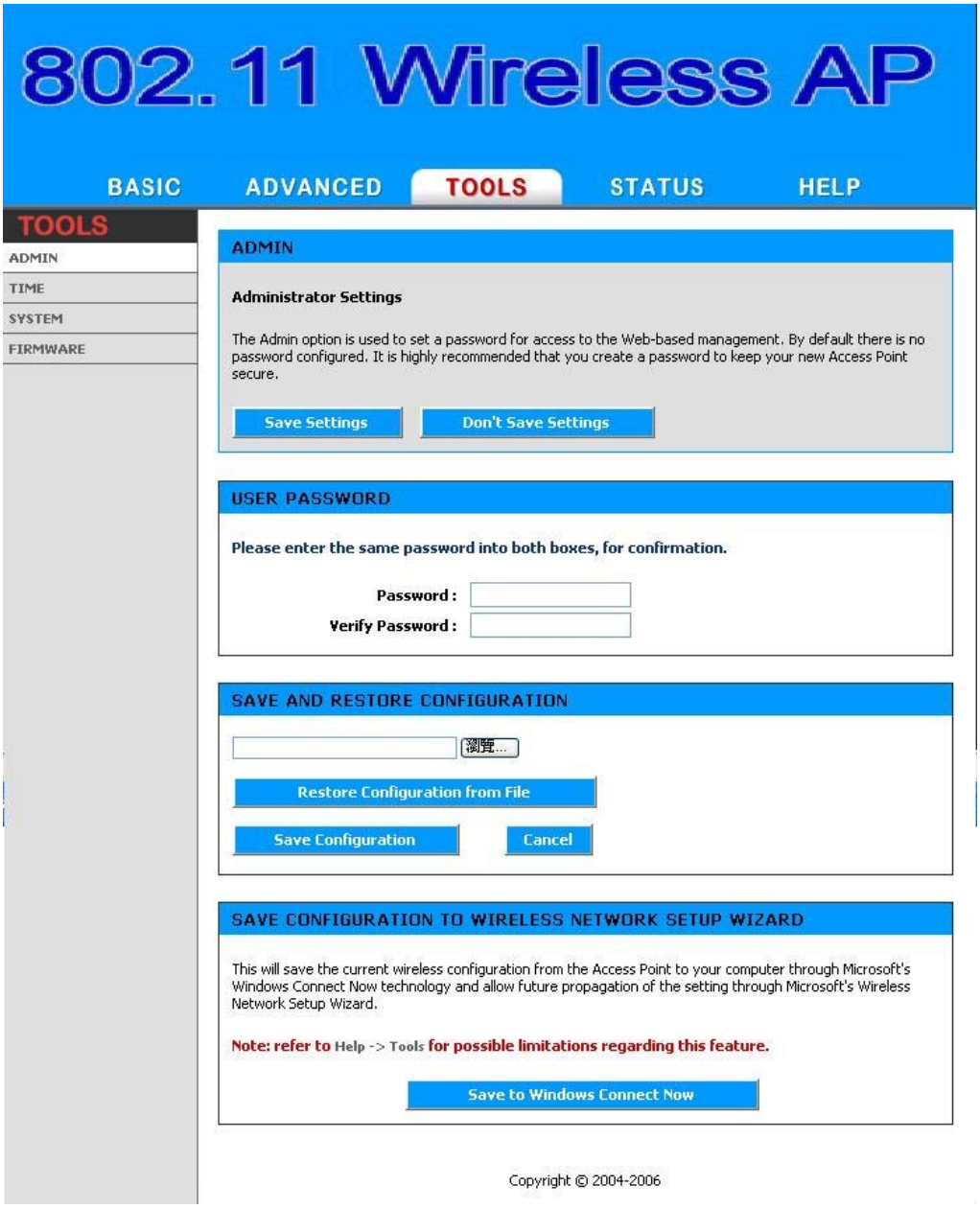

Figure 4-7

Admin Password

Enter a password for the user "admin", who will have full access to the Web-based management interface.

User Password

Enter a password for the user "user", who will have read-only access to the Web-based management interface.

Access Point Name

The name of the Access Point can be changed here.

Admin Idle Timeout

The amount of time before the administration session (either remote or local) is closed when there is no activity.

Save Configuration

This option allows you to save the Access Point's configuration to a file on your computer. Be sure to save the configuration before performing a firmware upgrade.

Restore Configuration from File

Use this option to load previously saved Access Point configuration settings.

Save Configuration To Wireless Network Setup Wizard

If your PC's operating system is Windows XP Service Pack 2 (SP2) or later and you are using Windows Internet Explorer (IE) as your browser, you can use this option to save key parts of the Access Point's current wireless security settings to your PC with Windows Connect Now (WCN) technology. The settings will then be available to propagate to other wireless devices.

WCN ActiveX Control

The WCN ActiveX Control provides the necessary WCN link between the Access Point and your PC via the browser. The browser will attempt to download the WCN ActiveX Control, if it is not already available on your PC. For this action to succeed, the WAN connection must be established, and the browser's internet security setting must be Medium or lower (select Tools -> Internet Options -> Security -> Custom Level -> Medium).

Click the button, and the WCN technology will capture the wireless network settings from your Access Point and save them on your PC.

Note that WCN only saves a few of the wireless security settings. When you use WCN to propagate settings to other wireless devices, you may have to make additional settings manually on those devices.

Note that, in Microsoft's current implementation of WCN, you cannot save the wireless settings if a profile of the same name already exists. To work around this limitation, either delete the existing profile or change the SSID when you change the wireless settings; then, when you save the new settings, a new profile will be created.

4.3.2 Time

The Time Configuration option allows you to configure, update, and maintain the correct time on the Access Point's internal system clock. From this section you can set the time zone that you are in and set the Time Server. Daylight saving can also be configured to automatically adjust the time when needed.

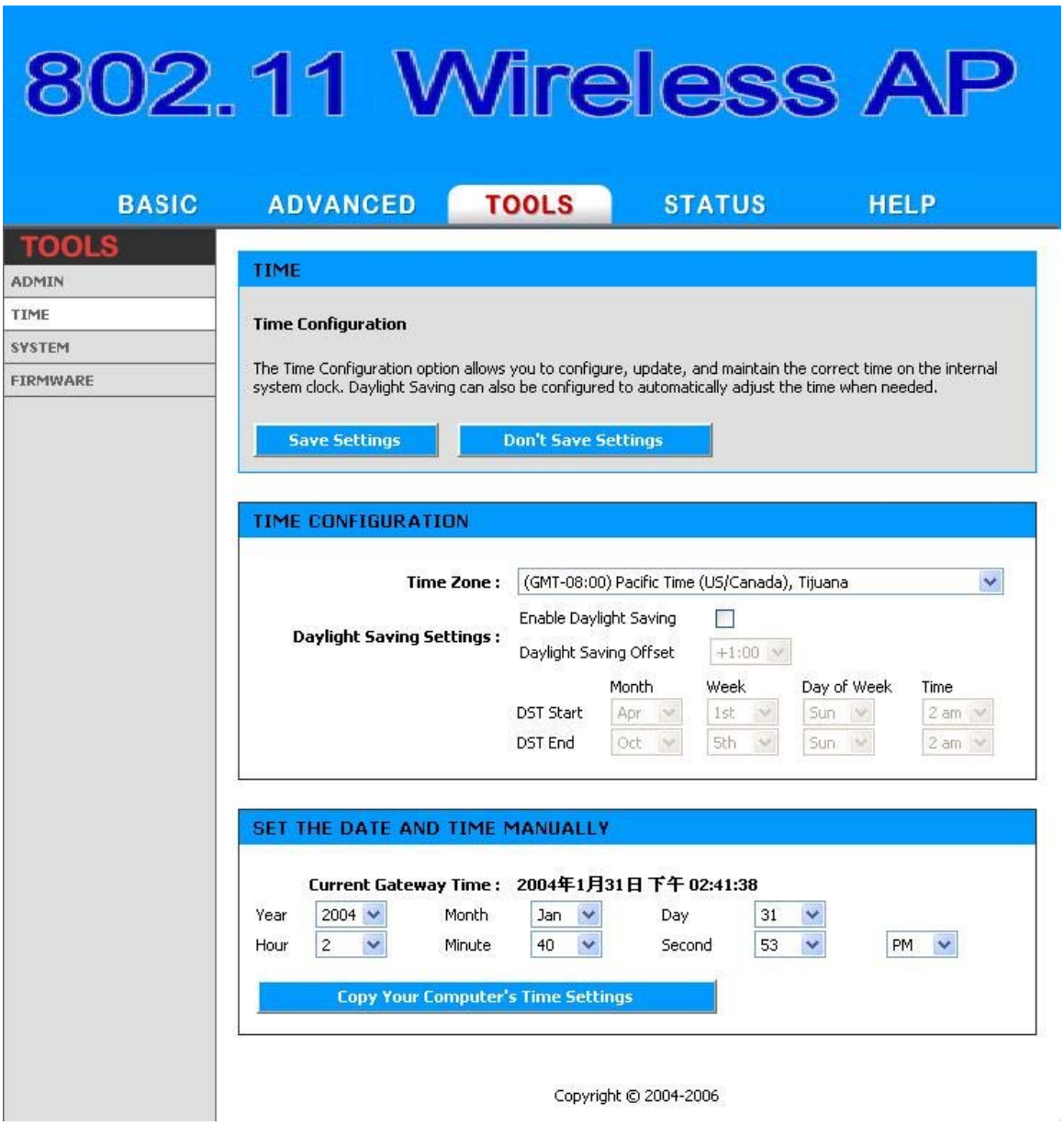

Figure 4-8

Time Configuration

Time Zone

Select your local time zone from pull down menu.

Daylight Saving Enable

Check this option if your location observes daylight saving time.

Daylight Saving Offset

Select the time offset, if your location observes daylight saving time.

DST Start and DST End

Select the starting and ending times for the change to and from daylight saving time. For example, suppose for DST Start you select Month="Oct", Week="3rd", Day="Sun" and Time="2am". This is the same as saying: "Daylight saving starts on the third Sunday of October at 2:00 AM."

Set the Date and Time Manually

If you do not have the NTP Server option in effect, you can either manually set the time for your Access Point here, or you can click the button to copy the time from the computer you are using. (Make sure that computer's time is set correctly.)

Note: If the Access Point loses power for any reason, it cannot keep its clock running, and will not have the correct time when it is started again. To maintain correct time for schedules and logs, either you must enter the correct time after you restart the Access Point, or you must enable the NTP Server option.

4.3.3 System

This section allows you to reboot the device, and restore the Access Point to the factory default settings. Restoring the unit to the factory default settings will erase all settings, including any rules that you've created.

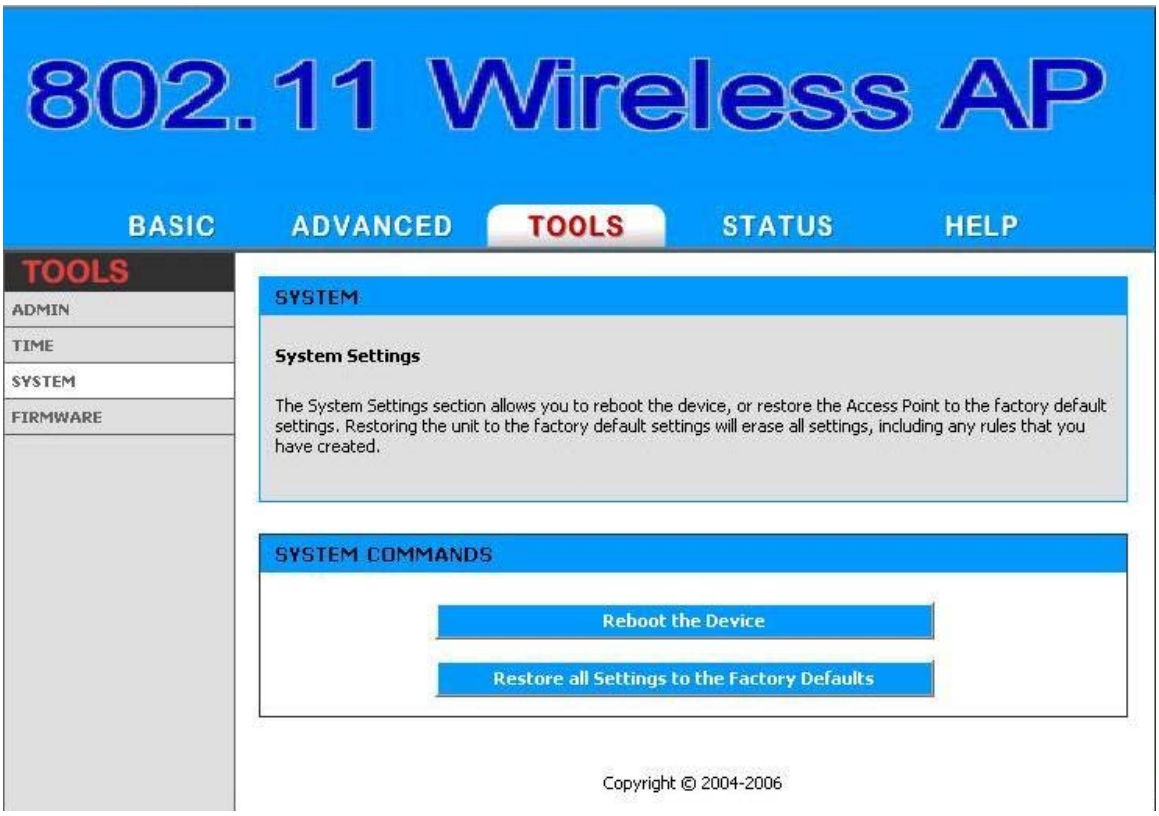

Figure 4-9

Reboot the Device

This restarts the Access Point. Useful for restarting when you are not near the device.

Restore all Settings to the Factory Defaults

This option restores all configuration settings back to the settings that were in effect at the time the Access Point was shipped from the factory. Any settings that have not been saved will be lost. If you want to save your Access Point configuration settings, you can do so from the Tools -> Admin page.

4.3.4 Firmware

The Firmware Upgrade section can be used to update to the latest firmware code to improve functionality and performance.

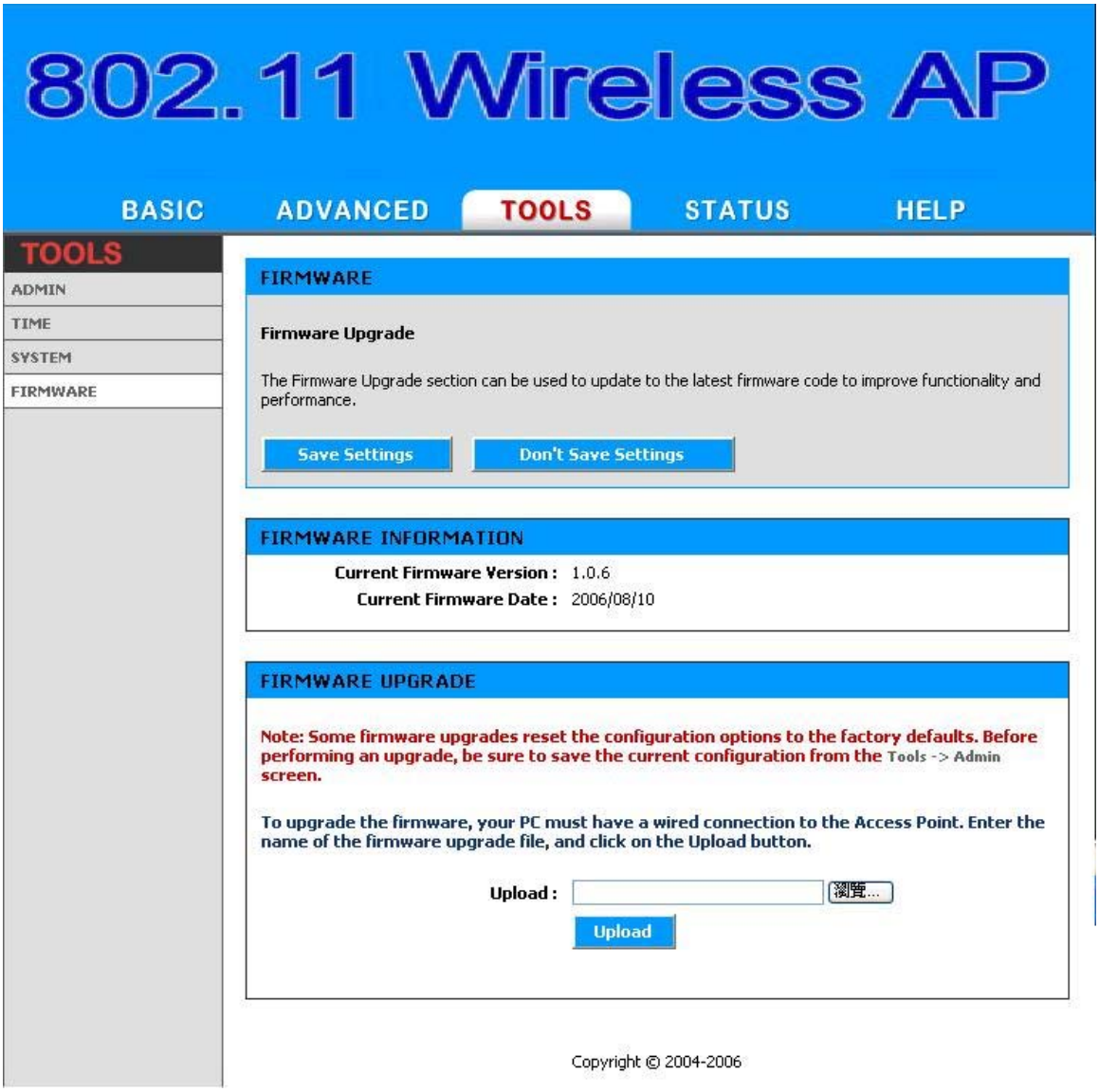

Figure 4-10

To upgrade the firmware, follow these steps:

1. Click the **Browse** button to locate the upgrade file on your computer.

2. Once you have found the file to be used, click the **Upload** button below to start the firmware upgrade process. This can take a minute or more.
3. Wait for the Access Point to reboot. This can take another minute or more.
4. Confirm updated firmware revision on status page.

Firmware Information

Here are displayed the version numbers of the firmware currently installed in your Access Point and the most recent upgrade that is available.

Firmware Upgrade

Note: Firmware upgrade cannot be performed from a wireless device. To perform an upgrade, ensure that you are using a PC that is connected to the Access Point by wire.

Note: Some firmware upgrades reset the configuration options to the factory defaults. Before performing an upgrade, be sure to save the current configuration from the Tools -> Admin screen.

Upload

Once you have a firmware update on your computer, use this option to browse for the file and then upload the information into the Access Point.

4.4 Status

4.4.1 Device Info

All of your Internet and network connection details are displayed on the Device Info page. The firmware version is also displayed here.

Note: Some browsers have limitations that make it impossible to update the WAN status display when the status changes. Some browsers require that you refresh the display to obtain updated status. Some browsers report an error condition when trying to obtain WAN status.

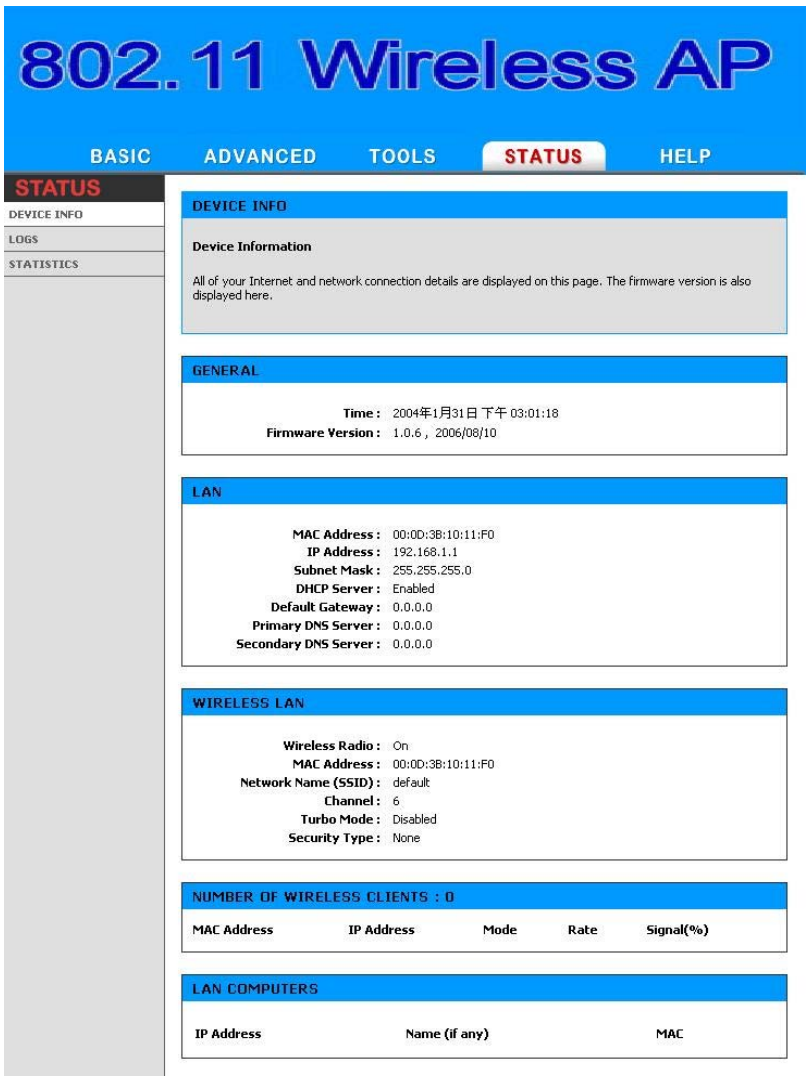

Figure 4-11

LAN Computers

This area of the screen continually updates to show all DHCP enabled computers and devices connected to the LAN side of your Access Point. The detection "range" is limited to the address range as configured in DHCP Server. Computers that have an address outside of this range will not show. If the DHCP Client (i.e. a computer configured to "Automatically obtain an address") supplies a Host Name then that will also be shown. Any computer or device that has a static IP address that lies within the detection "range" may show, however its host name will not.

WIRELESS

The wireless section allows you to view the wireless clients that are connected to your wireless Access Point.

MAC Address

The Ethernet ID (MAC address) of the wireless client.

IP Address

The LAN-side IP address of the client.

Mode

The transmission standard being used by the client. Values are 11a, 11b, or 11g for 802.11a, 802.11b, or 802.11g respectively.

Rate

The actual transmission rate of the client in megabits per second.

Signal

This is a relative measure of signal quality. The value is expressed as a percentage of theoretical best quality. Signal quality can be reduced by distance, by interference from other radio-frequency sources (such as cordless telephones or neighboring wireless networks), and by obstacles between the Access Point and the wireless device.

4.4.2 Logs

The Access Point automatically logs (records) events of possible interest in its internal memory. If there is not enough internal memory for all events, logs of older events are deleted, but logs of the latest events are retained. The Logs option allows you to view the Access Point logs. You can define what types of events you want to view and the level of events to view. This Access Point also has external Syslog Server support so you can send the log files to a computer on your network that is running a Syslog utility.

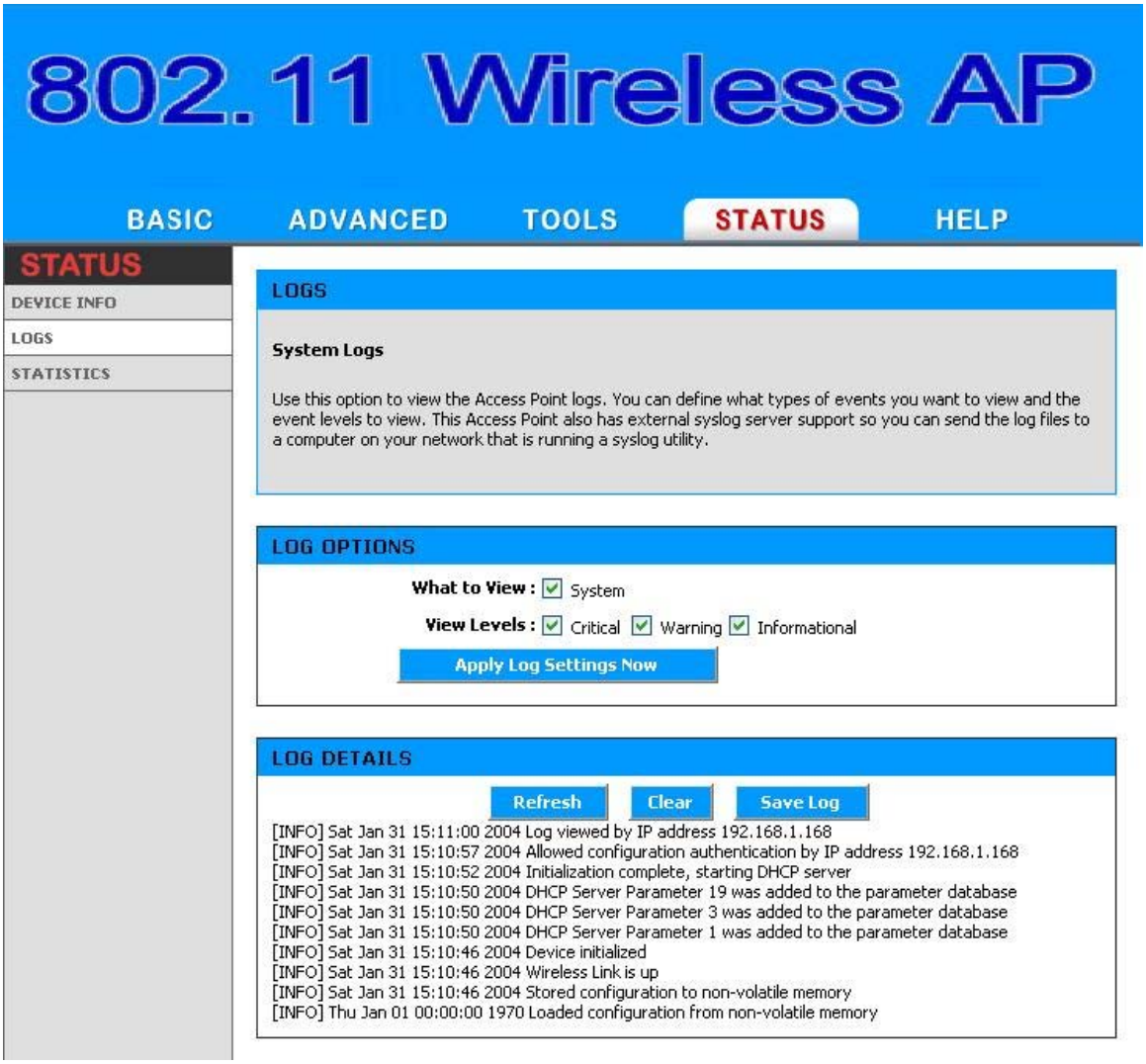

Figure 4-12

What to View

Select the kinds of events that you want to view.

- System

View Levels

Select the level of events that you want to view.

- Critical
- Warning
- Informational

Apply Log Settings Now

Click this button after changing Log Options to make them effective and permanent.

Refresh

Clicking this button refreshes the display of log entries. There may be new events since the last time you accessed the log.

Clear

Clicking this button erases all log entries.

Save Log

Select this option to save the Access Point log to a file on you computer.

4.4.3 Statistics

The Statistics page displays all of the LAN, WAN, and Wireless packet transmit and receive statistics.

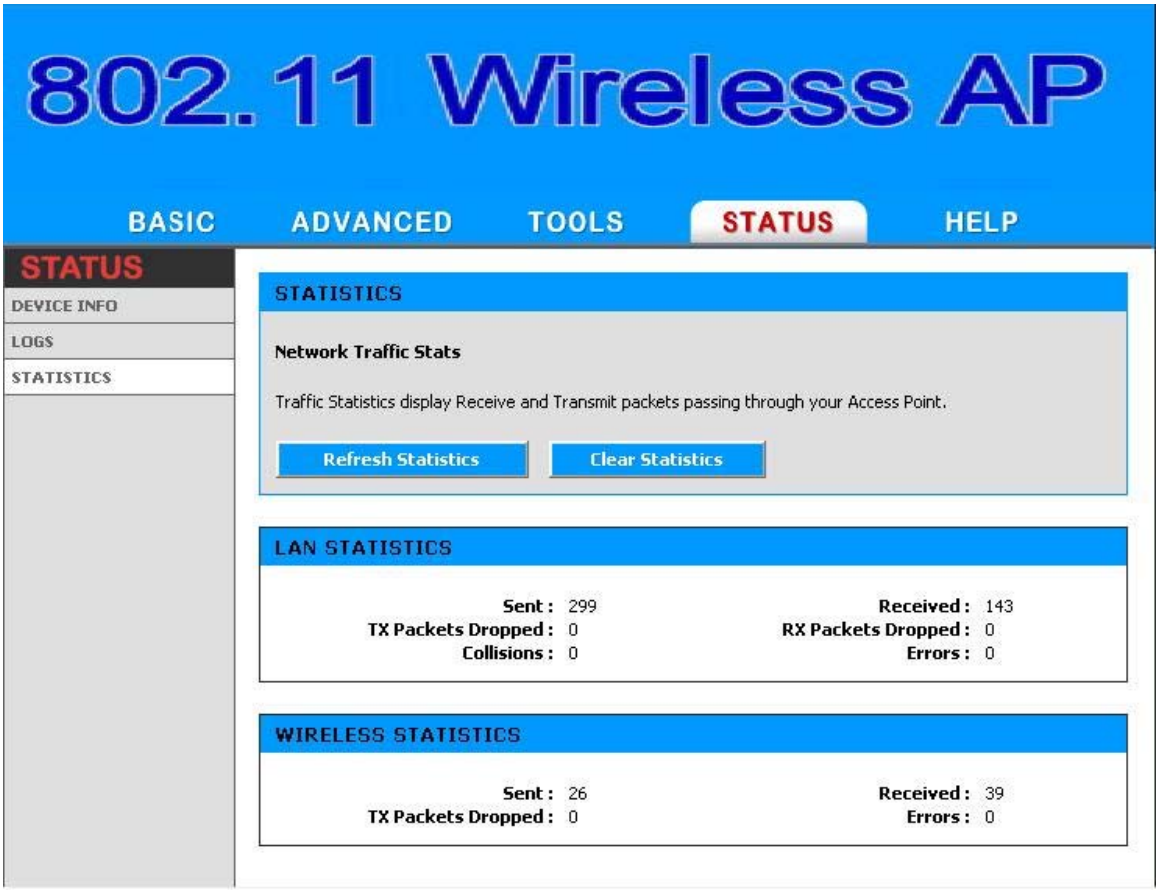

Figure 4-13

Sent

The number of packets sent from the Access Point.

Received

The number of packets received by the Access Point.

TX Packets Dropped

The number of packets that were dropped while being sent, due to errors, collisions, or Access Point resource limitations.

RX Packets Dropped

The number of packets that were dropped while being received, due to errors, collisions, or Access Point resource limitations.

Collisions

The number of packets that were dropped due to Ethernet collisions (two or more devices attempting to use an Ethernet circuit at the same time).

Errors

The number of transmission failures that cause loss of a packet. A noisy radio-frequency environment can cause a high error rate on the wireless LAN.

Chapter 5. Specifications

The OW2000APP Outdoor Wireless Multi-Client Bridge/Access Point/WDS (wireless distribution system) operates seamlessly in the 2.4 GHz frequency supporting the IEEE 802.11b/802.11g wireless standards. It's the best way to add wireless capability to your existing wired network, or to add bandwidth to your existing wireless installation.

To secure your wireless connectivity, it can encrypt all wireless transmissions through 64/128-bit WEP data encryption and also supports WPA/WPA2. A MAC address filter lets you select exactly which stations should have access to your network. With the Wireless Multi-Client Bridge/Access Point/WDS, you'll experience the best wireless connectivity available today.

Features

- High Speed Data Rate Up to 54Mbps
- Output Power up to 17 dBm (23dBm, 26dBm optional requirement)
- IEEE 802.11b/g Compliant
- Point-to-point, Point-to-multipoint Wireless Connectivity
- WEP/WPA/WPA2/ IEEE 802.1x Authenticator support
- WDS (Wireless Distribution System)
- Dust tight and Watertight and Weatherproof (IP67/IP68)
- Wide temperature range and robust mechanical design
- Power-over-Ethernet (IEEE802.3af Compliant)

Data Rates	1, 2, 5.5, 6, 9, 11, 12, 18, 24, 36, 48, 54 Mbps
Standards	IEEE802.11b/g, IEEE802.1x, IEEE802.3, IEEE802.3u
Compatibility	IEEE 802.11g/ IEEE 802.11b
Power Requirements	Active Ethernet (802.3af) – 48 VDC/0.35A
Regulation Certifications	FCC Part 15/UL, ETSI 300/328/CE
RF Information	Atheros BB/MAC/RF
Frequency Band	2.400～2.484 GHz
Media Access Protocol	Carrier Sense Multiple Access with Collision Avoidance (CSMA/CA)
Modulation Technology	Orthogonal Frequency Division Multiplexing (OFDM), DBPSK @ 1Mbps, DQPSK @2Mbps, CCK @ 5.5 & 11Mbps, BPSK @ 6 and 9 Mbps, QPSK @ 12 and 18 Mbps, 16-QAM @ 24 and 36 Mbps, 64-QAM @ 48 and 54 Mbps
Operating Channels	11 for North America, 14 for Japan, 13 for Europe,2 for Spain, 4 for France
Receive Sensitivity (Typical)	-72dBm @ 54Mbps
Available transmit power(Typical)	17dBm @1, 2, 5.5 and 11Mbps, 17dBm@6Mbps, 14dBm@54Mbps

Antenna	5dBi External
RF Connector	SMA Type (AP only)
Networking Topology	Ad-Hoc, Infrastructure
Operation Mode	Point-to-Point/ Point-to-Multipoint Bridge/ AP/ Client Bridge/ WDS
Interface	One 10/100Mbps RJ-45 LAN Port
Security	IEEE802.1x authenticator /RADIUS client (EAPMD5/TLS/TTLS) support in AP mode WPA / Pre Share KEY (PSK)/TKIP MAC address filtering Hide SSID in beacons Layer 2 Isolation
IP Auto-configuration	DHCP client/server
Management Configuration	Web-based configuration (HTTP)
Firmware Upgrade	Upgrade firmware via web browser
Physical Dimensions	209.1(L)mm * 165.4(W)mm * 61.5(H)mm
Weight	AP: 500g (1.1 lbs); CB: 600g (1.3 lbs)
Environmental Temperature Range	-Operating: -20°C to 70°C (-4°F to 158°F) -Storage: -40°Cto 80°C (-40°F to 176°F)
Humidity (non-condensing)	5%~95% Typical
Package Contents	Water tight Outdoor Wireless Client Bridge unit 48V, 0.38A AC/DC adapter with wall-plug power code Inline Power Injector (PoE) 1.8m Grounding Cable 30m Ethernet Cable User's manual CD-ROM Wall mounting kit Mast mounting kit

Chapter 6. Default Settings

6.1 BASIC

6.1.1 WIZARD

6.1.1.1 CONNECTION SETUP WIZARD

Parameter	Description	Default Value
Password	Web Login password	Admin
Verify Password		Admin
Time	Time Zone	GTM-08:00,Tijuana

6.1.1.2 MICRPSOFT WINDOWS CONNECT WIZARD

6.1.1.3 WIRELESS SECURITY SETUP WIZARD

Parameter	Description	Default Value
Wireless Network Name(SSID)	A name it can be easily recognized by wireless clients	Default
SECURE YOUR WIRELESS NETWORK	In order to protect your network from hackers and unauthorized users	NONE

6.1.2 LAN

Parameter	Description	Default Value
Get LAN IP from	A name it can be easily recognized by wireless clients	Static IP(Manual)
IP Address	In order to protect your network from hackers and unauthorized users	192.168.1.1
Subnet Mask		255.255.255.0
Gateway		0.0.0.0
Local Domain Name		NULL

6.1.3 DHCP

6.1.3.1 ENABLE

Parameter	Description	Default Value
Enable DHCP Server		Select

6.1.3.2 DHCP SETTING

Parameter	Description	Default Value
DHCP IP Address Range		192.168.1.100 ~ 192.168.1.199
Primary DNS		0.0.0.0
Secondary DNS		0.0.0.0
DHCP Lease Time		1440
Always broadcast		Select

6.1.3.3 ADD DHCP RESERVATION

Parameter	Description	Default Value
Enable	Enable DHCP RESERVATION	Select
IP Address		0.0.0.0
MAC Address		00:00:00:00:00:00
Copy Your PC's MAC Address	If you press this icon your PC's MAC will show on table	
Computer Name		NULL

6.1.4 WIRELESS

6.1.4.1 ENABLE

Parameter	Description	Default Value
Enable DHCP Server		Select

6.1.4.2 BASIC WIRELESS SETTING

Parameter	Description	Default Value
Wireless Network Name(SSID)		Default
Visibility Status		Visible
Auto Channel Select		Select
REGION ID		4
Channel		
Transmission Rate		BEST(Automatic)
802.11 Mode		MIX 802.11g and 802.11b
Super G™ Mode		Super AG without Turbo

6.1.4.3 WIRELESS SECURITY MODE

Parameter	Description	Default Value
Security Mode		None

6.2 ADVANCE

6.2.1 MAC Address Filter

Parameter	Description	Default Value
Enable MAC Address Filter		No Select

6.2.2 Advanced Wireless

Parameter	Description	Default Value
Fragmentation Threshold		2346
RTS		2346
Beacon Period		100
DTIM Interval		1
802.11d		No Select
Transmit Power		High
WDS Enable		No Select

6.3 TOOLS

6.3.1 ADMIN

6.3.1.1 ADMIN PASSWORD

Parameter	Description	Default Value
Password	Web Login password	Admin
Verify Password		Admin

6.3.1.2 USER PASSWORD

Parameter	Description	Default Value
Password	Web Login password	Admin
Verify Password		Admin

6.3.1.3 SAVE AND RESTORE CONFIGURATION

6.3.1.4 SAVE CONFIGURATION TO WIRELESS NETWORK SETUP WIZARD

6.3.2 TIME

6.3.2.1 TIME CONFIGURATION

Parameter	Description	Default Value
Time Zone		GTM-08:00,Tijuana

6.3.2.2 SET THE DATE AND TIME MANUALLY

Parameter	Description	Default Value
Year		2004
Month		Jan
Day		31
Hour		1
Minute		7
Second		45
A.M. / P.M.		PM

6.3.3 SYSTEM

Parameter	Description	Default Value
Reboot the Device		
Restore all Setting to the Factory Defaults		

6.3.4 FIRMWARE

Parameter	Description	Default Value
Upload File	Program Image	Upgrade bin

Chapter 7. Regulatory Compliance Information

15.21

CAUTION: Any changes or modifications not expressly approved by the party responsible for compliance could void the user's authority to operate the equipment.

Prohibition of co-location

This device and its antenna(s) must not be co-located or operating in conjunction with any other antenna or transmitter.

15.105 Federal Communications Commission (FCC) Requirements, Part 15

This equipment has been tested and found to comply with the limits for a class B digital device, pursuant to part 15 of the FCC Rules. These limits are designed to provide reasonable protection against harmful interference in a residential installation.

This equipment generates, uses and can radiate radio frequency energy and, if not installed and used in accordance with the instructions, may cause harmful interference to radio communications. However, there is no guarantee that interference will not occur in a particular installation. If this equipment does cause harmful interference to radio or television reception, which can be determined by turning the equipment off and on, the user is encouraged to try to correct the interference by one or more of the following measures:

---Reorient or relocate the receiving antenna.

---Increase the separation between the equipment and receiver.

---Connect the equipment into an outlet on a circuit different from that to which the receiver is connected.

---Consult the dealer or an experienced radio/TV technician for help.

Caution Statement of the FCC Radio Frequency Exposure

This Wireless LAN radio device has been evaluated under FCC Bulletin OET 65C and found

compliant to the requirements as set forth in CFR 47 Sections 2.1091, 2.1093, and

15.247(b)(4) addressing RF Exposure from radio frequency devices. The radiation output

power of this Wireless LAN device is far below the FCC radio frequency exposure limits.
Nevertheless, this device shall be used in such a manner that the potential for human contact
during normal operation—as a mobile or portable device but use in a body-worn way is strictly
prohibit. When using this device, a certain separation distance between antenna and nearby
persons has to be kept to ensure RF exposure compliance.

Regulatory information / Disclaimers

Installation and use of this Wireless LAN device must be in strict accordance with the instructions included in the user documentation provided with the product. Any changes or modifications (including the antennas) made to this device that are not expressly approved by the manufacturer may void the user's authority to operate the equipment. The manufacturer is not responsible for any radio or television interference caused by unauthorized modification of this device, or the substitution of the connecting cables and equipment other than manufacturer specified. It is the responsibility of the user to correct any interference caused by such unauthorized modification, substitution or attachment. Manufacturer and its authorized resellers or distributors will assume no liability for any damage or violation of government regulations arising from failing to comply with these guidelines.

MPE Statement (Safety Information)

Your device contains a low power transmitter. When device is transmitted it sends out Radio
Frequency (RF) signal.

Safety Information

CAUTION: To maintain compliance with FCC's RF exposure guidelines, this equipment should be installed and operated with minimum distance 20cm between the radiator and your body. Use on the supplied antenna. Unauthorized antenna, modification, or attachments could damage the transmitter and may violate FCC regulations.

OW-2000

Outdoor Wireless Client Bridge

User's Manual

BEFORE INSTALLING THE UNIT, PLEASE READ THIS MANUAL THOROUGHLY, AND RETAIN IT FOR FUTURE REFERENCE.

► Contents

Chapter 1. Introduction 3
1.1 Introducing the OW-2000 3
1.2 Product Features 3
1.3 Package Contents 3
1.4 System Requirements 4
1.5 Inline Power Injector (PoE) 4
Chapter 2. Installation and Basic Configuration 5
2.1 Before You Start 5
2.2 Locate the OW-2000 and Inline Power Injector Ports 6
2.3 Preparing Installation 8
2.4 Basic Configuration 10
2.4.1 Basic Configuration Steps 10
2.4.2 Logging into the Web Interface 10
2.4.3 Set Operating Mode, IP Address, Subnet Mask, Default Route IP, DNS Server IP of OW-2000 13
2.4.4 Set Wireless Encryption for Wireless Interface 14
2.4.5 Change Supervisor Account & Password 15
2.4.6 Upgrade the Firmware 16

Chapter 1. *Introduction*

1.1 Introducing the OW-2000

The OW-2000 is fully interoperable with IEEE 802.11a and/or 802.11b/g compliant Outdoor Wireless Last-mile product. The OW-2000 operates in AP mode or remote bridge mode, and connects to OW-2000 AP/CB to construct point-to-point as well as point-to-multipoint topologies, for maximum flexibility in configuring building-to-building networks and WISP functions.

1.2 Product Features

- Outdoor enclosure in compliance with versatile industrial IP（Ingress Protection） level covering IP67, IP66, IP55 and IP50
- RF transmit power 802.11b mode @ 11Mbps data rate
- RF transmit power 802.11g mode @ 54Mbps data rate
- Embedded 9dBi patch directional antenna
- Support 48VDC 0.375A Power-over-Ethernet（PoE）
- NAT/NAPT and Virtual Server Mapping support (Optional)
- MIB-II and Private MIB support (Optional)
- MAC address based access control (Optional)

Hint: IP（Ingress Protection）

1.3 Package Contents

The product package contains the following items.

1. One (1) OW-2000 Outdoor Wireless Access Point / Client Bridge unit
2. One (1) 100~240VAC, 50~60Hz AC to 48V/0.375A DC switching adapter (Optional)
3. One (1) 48VDC, 0.375A Inline Power Injector (PoE) (Optional)
4. One (1) 30m RJ-45 CAT-5 Ethernet cable (Optional)
5. One (1) 1.8m RJ-45 CAT-5 Cross Over Cable (Optional)
6. One (1) 1.8m grounding wire (Optional)
7. One (1) User manual CD-disc ~~(Optional)~~
8. One (1) wall/mast mounting kit (Optional)
9. One (1) band clamp (Optional)

1.4 System Requirements

Installation of the OW-2000 Outdoor Wireless Access Point/Client Bridge requires the following:

1. A Windows-based PC/AT compatible computer（PC system requirement：better than PIII 800 or other 100% compatible equipment , OS：windows 2000/XP ）or Ethernet data device with an available RJ-45 Ethernet port to run the configuration program or with TCP/IP connection to the Ethernet network.
2. A 10/100Base-T Ethernet RJ-45 Ethernet cable is connected to Ethernet network.
3. An AC power outlet (100~240V, 50~60Hz) supplies the power.

1.5 Inline Power Injector (PoE)

The OW-2000 is equipped with an Inline Power Injector module. The Inline Power Injector (PoE) delivers both data and power to OW-2000 unit via a signal Ethernet cable, and gives the following benefits to improve the performance vs. installation cost ratio.

- This works great in areas where you may not have power , like house roof.
- This also allows you to place the OW-2000 unit closer to the antenna, to make installation easier more thus reducing signal loss over antenna cabling.
- Ethernet signal travels well over CAT 5 cable but 2.4GHz signal doesn't do as well over antenna cabling.
- Ethernet cabling is much cheaper than Antenna cabling.

Chapter 2. *Installation and Basic Configuration*

This chapter describes the procedures of installing the OW-2000.

2.1 Before You Start

After unpacking the system, make sure the following items are present and in good condition. Refer to below pictures for product image.

1. OW-2000 Outdoor Wireless Access Point/Client Bridge unit
2. 100~240VAC, 50~60Hz AC to 48V/0.375A DC switching adapter (Optional)
3. Inline Power Injector (PoE) 48VDC, 0.375A (Optional)
4. RJ-45 CAT-5 Ethernet cable 30 m (Optional)
5. RJ-45 CAT-5 Cross-over Ethernet cable 1.8m (Optional)
6. Grounding wire 1.8m (Optional)
7. User manual CD-disc
8. Wall/mast mounting kit, including one (1) band clamp (Optional)
9. Screws

1. Unit	2. Adapter	3. PoE	4. 30m cable
5. 1.8m cable	6. Grounding wire	7. CD	8. Wall mount
9. Screws			

2.2 Locate the OW-2000 and Inline Power Injector Ports

► **Interface on the OW-2000 Unit**

- **Ethernet Port** 1 : for connecting the 30m RJ-45 CAT-5 Ethernet cable.

► **Interface on the Inline Power Injector**

- **Data Input Port** 2 : for connecting cross-over Ethernet Cable to PC or straight Ethernet cable to Hub Switch Router .
- **DC Input Port** 3 : power adapter 48V, 0.375A DC input.
- **Power & Data Output Port** 4 : for connecting the 30m RJ-45 CAT-5 Ethernet Cable.
- **Grounding Port** 5 : for connecting grounding wire.

Device

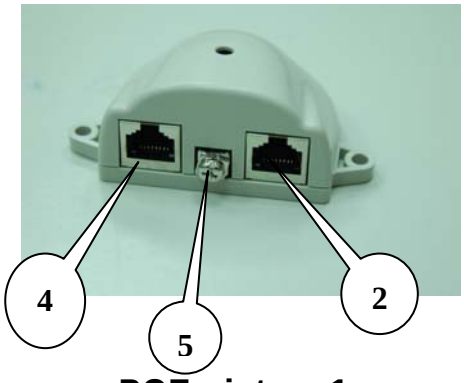

POE picture1

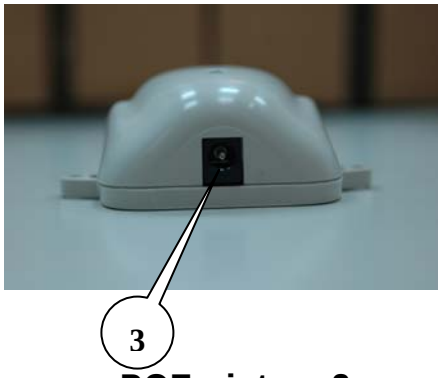

POE picture2

Figure 2-1

Power and Data Interface location on the PoE denoted by numbers 1-6.

► Mount OW-2000 on A Wall/Mast

The OW-2000 can be mounted on the wall, you can use the Wall Mount kit to mount the OW-2000 as shown in **Figure 2-2**.

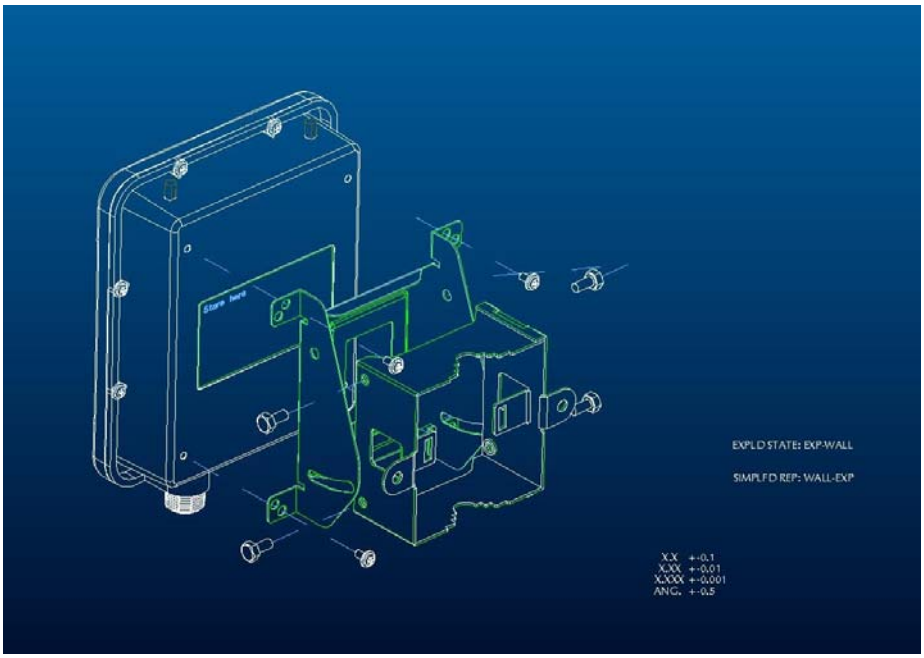

Figure 2-2

You can also mount the OW-2000 to the mast as shown in **Figure 2-3**.

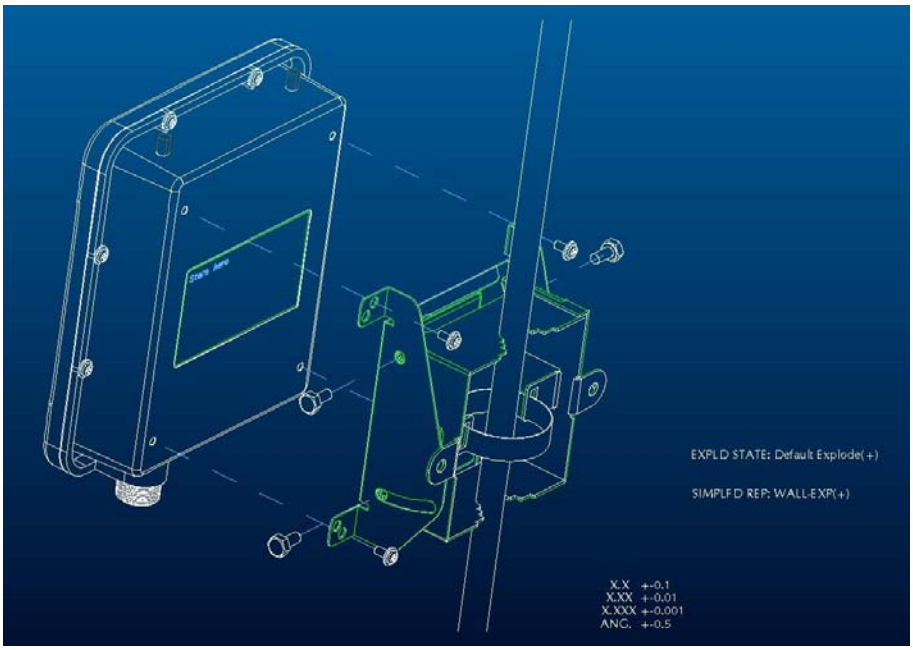

Figure 2-3

2.3 Preparing Installation

Before installing OW-2000 for outdoor application or hard-to-reach location, we recommend configuring and test all the devices first.

For configuring the OW-2000, please follow the quick steps below to power up the OW-2000. Refer to **Figure 2-4** for steps 1 through 5.

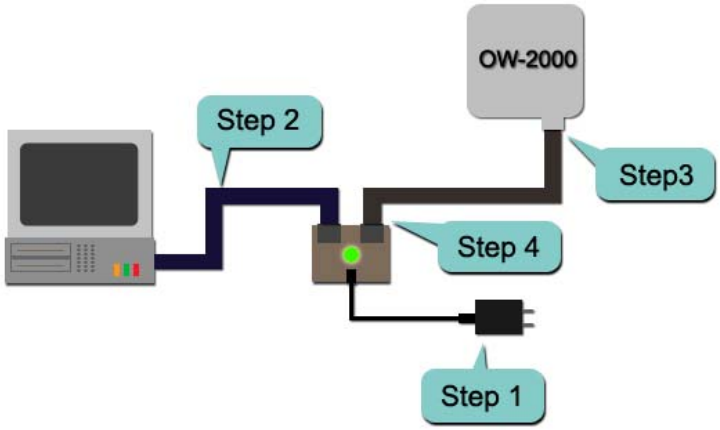

Figure 2-4

Step1 : Connect the DC plug of the AC/DC power adapter into the **DC Input Port** of Inline Power Injector and the wall-mount plug into a power outlet or power strip (refer to **page 6**). The Power LED on the Inline Power Injector will light up.

Step2 : Run the cross-over type uplink Ethernet cable from **Data Input Port** (refer to**page 6**) to the Ethernet port on a PC.

Step3 : Connect the 30m CAT 5 Ethernet cable into the OW-2000 unit. Hand tighten the connector.

Step4 : Connect the remaining end of the 30m CAT 5 cable into the PoE labeled AP/Bridge. This is the power side of the PoE that will power up the OW-2000.

When the OW-2000 receives power over the Ethernet cable, the OW-2000 will start its boot up sequence and the **Active** LED on the Inline Power Injector will light up.

You can configure the OW-2000 via HTML browser, such as Microsoft Internet

Explorer or Netscape Navigator from a remote host or PC.

2.4 Basic Configuration

2.4.1 Basic Configuration Steps

This section describes a two-step BASIC configuration procedure to setup OW-2000.

Step1 : Modify the factory-default parameters on the web page "/**BASIC/LAN/**", and click **Save Settings** to save the changes, than click **Continue** .

Step2 : Modify the factory-default parameters on the web page "/**BASIC/Wireless/**", and click **Save Settings** to save the changes, than click **Reboot the Device** to take effect on the previous configuration changes.

2.4.2 Logging into the Web Interface

The OW-2000 supports access to the configuration system through the use of an HTTP Interface.

► **Web Configuration**

Before configuring OW-2000, the user needs to know the IP Address assigned to the unit. When shipped from the factory, the IP Address **192.168.0.241** was assigned to the OW-2000 by default. **To start a web connection, use http://192.168.0.241**

► **Web Access Procedures**

Once you identify the IP Address assigned to OW-2000, use web browser to configure OW-2000 through the HTTP Interface. The following procedure explains how to configure each item.

Step1 : Open your browser and enter the IP Address

Step2 : Press <**ENTER**> key and the OW-2000 **Login** screen appears as shown in **Figure 2-5**.

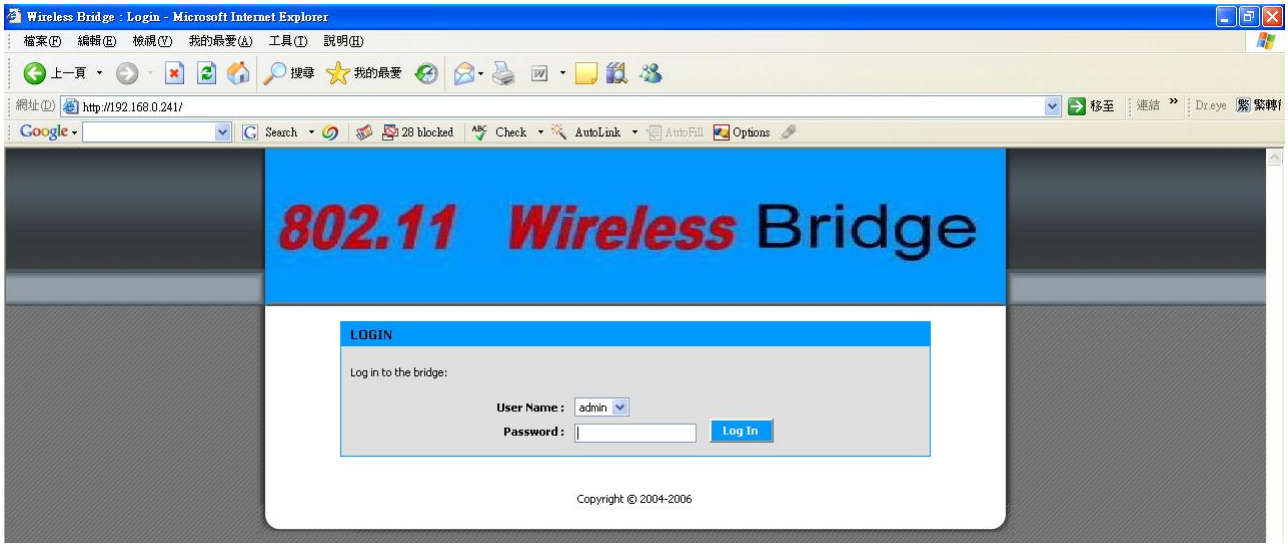

Figure 2-5

Step3 : Enter "**admin**" in the **Password** fields, and click **Log In** to enter the web configuration user interface screen as shown below.

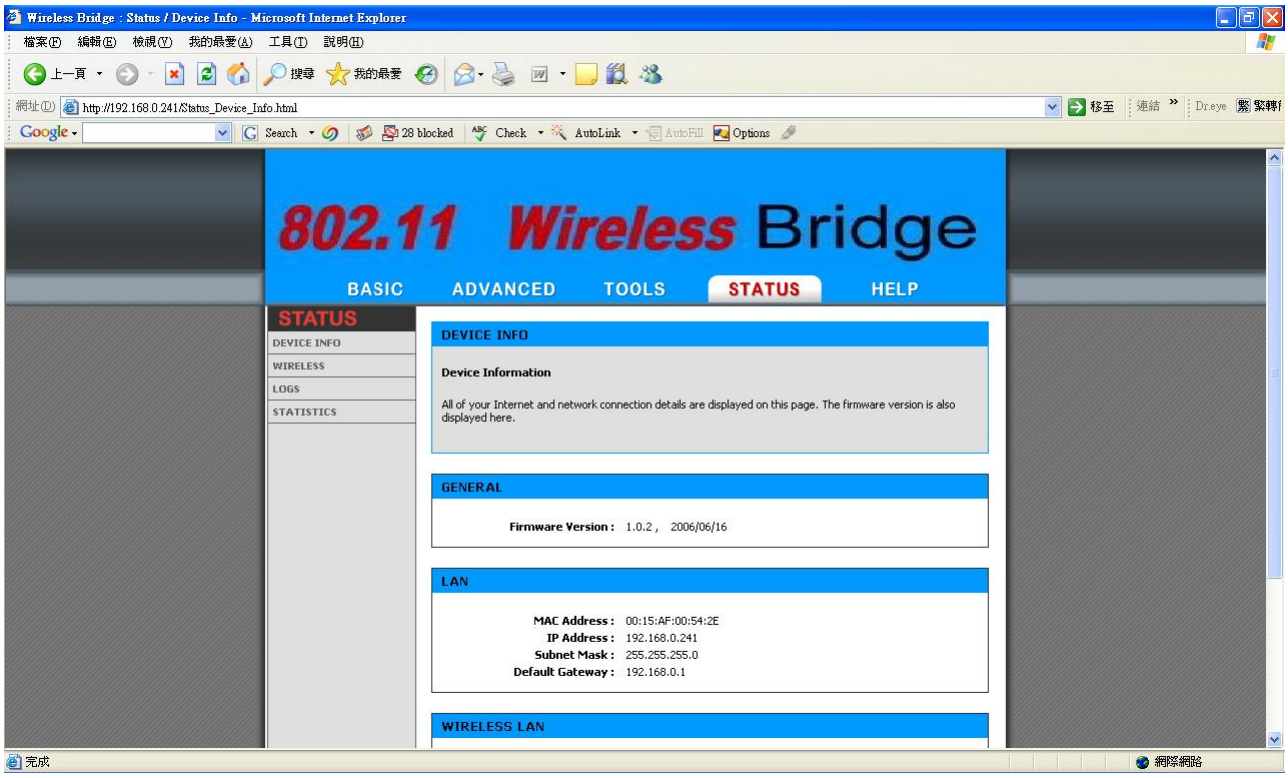

Figure 2-6

► Web Configuration Structure

The web configuration user interface shown above in **Figure 2-6** is grouped into a tree structure, and contains the following settings or information.

▽ BASIC

- WIZARD
- LAN
- DHCP
- WIRELESS

▽ ADVANCED

- MAC ADDRESS FILTER
- ADVANCED WIRELESS

▽ TOOLS

- ADMIN
- TIME
- SYSTEM
- FIRMWARE

▽ STATUS

- DEVICE INFO
- WIRELESS
- LOGS
- STATISTICS

▽ HELP

- MENU
- BASIC
- ADVANCED
- TOOLS
- STATUS
- GLOSSARY

Move through the tree by clicking on an icon to expand or collapse the tree. The nodes on the tree represent web pages that allow viewing and modifying the parameters.

2.4.3 Set Operating Mode, IP Address, Subnet Mask, Default Route IP, DNS Server IP of OW-2000

► LAN Settings

These are the settings of the LAN (Local Area Network) interface for the Access Point. The Access Point's local network (LAN) settings are configured based on the IP Address and Subnet Mask assigned in this section. The IP address is also used to access this Web-based management interface. This option is available in the "**/BASIC/LAN/**" page as shown in **Figure 2-7**.

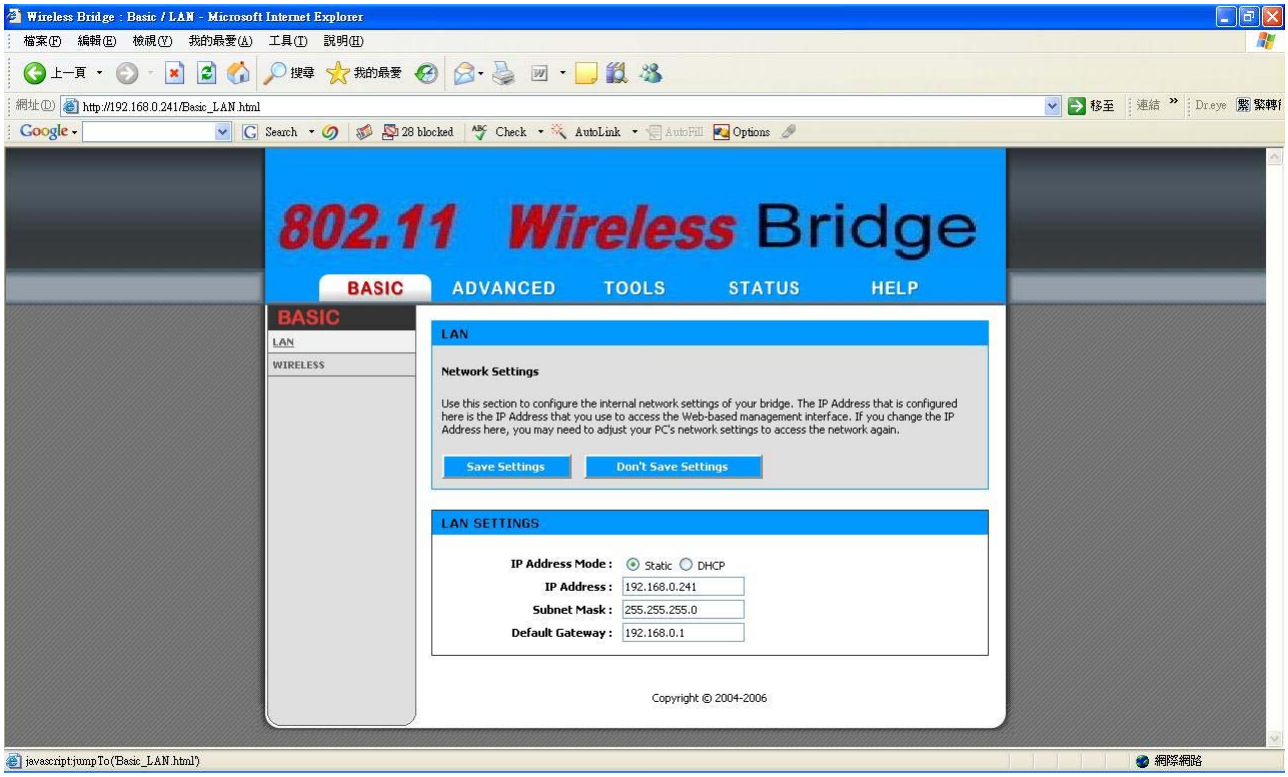

Figure 2-7

► Get LAN IP From

Choose "DHCP (Dynamic)" if your router supports DHCP and you want the router to assign an IP address to the CB. In this case, you do not need to fill in the following fields. Choose "Static IP (Manual)" if your router does not support DHCP or if for any other reason you need to assign a fixed address to the CB. In this case, you must also configure the following fields.

► **IP Address**

The IP address of the CB on the local area network. Assign any unused IP address in the range of IP addresses available for the LAN. For example, 192.168.0.1.

► **Subnet Mask**

The subnet mask of the local area network.

► **Gateway**

The IP address of the router on the local area network.

► **Local Domain Name**

This entry is optional. Enter a domain name for the local network. The CB's DHCP server will give this domain name to the computers on the wireless LAN. So, for example, if you enter mynetwork.net here, and you have a wireless laptop with a name of chris, that laptop will be known as chris.mynetwork.net. Note, however, if the CB's settings specify "DHCP (Dynamic)" Address, and the router's DHCP server assigns a domain name to the CB, that domain name will override any name you enter here.

2.4.4 Set Wireless Encryption for Wireless Interface

The OW-2000 supports 64-bit and 128-bit WEP encryption.

For **64-bit** WEP encryption, an encryption key is 10 hexadecimal characters (0-9 and A-F) or 5 ASCII characters.

For **128-bit** WEP encryption, an encryption key is 26 hexadecimal characters or 13 ASCII characters.

Modify the WEP encryption parameters on the web page "/**BASIC/WIRELESS/WIRELESS SECURITY MODE**". Choice "WEP" Enter 1~15 characters into the **WEP Key** field, than click **Save Setting** ,**Reboot the Device**.

2.4.5 Change Supervisor Account & Password

Enter the **TOOLS** > **ADMIN** page. **Figure 2-8** below shows the **TOOLS/ ADMIN** page.

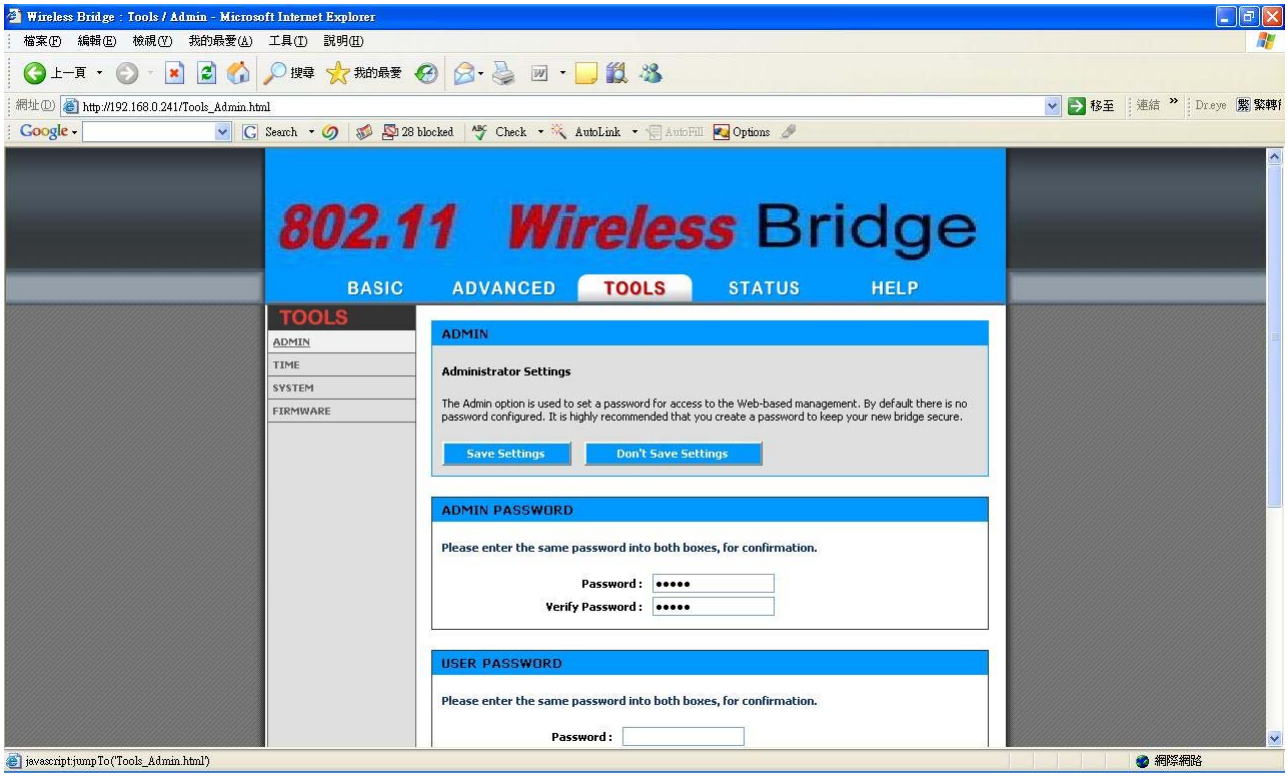

Figure 2-8

► ADMIN PASSWORD

Change the ADMIN PASSWORD's user name and password in the **ADMIN PASSWORD Account** field, and click **Save Setting** ，than **Reboot the Device**. to take effect on the previous configuration changes.

2.4.6 Upgrade the Firmware

► Update the Firmware

Enter the **TOOLS** > **FIRMWARE** page as shown in **Figure 2-9** to upgrade OW-2000. Here, user must select which file you want to upgrade it (**Program image**), then click **Upload** button to start the upgrade process.

Hint: It takes about 1 min, to complete the restart process.

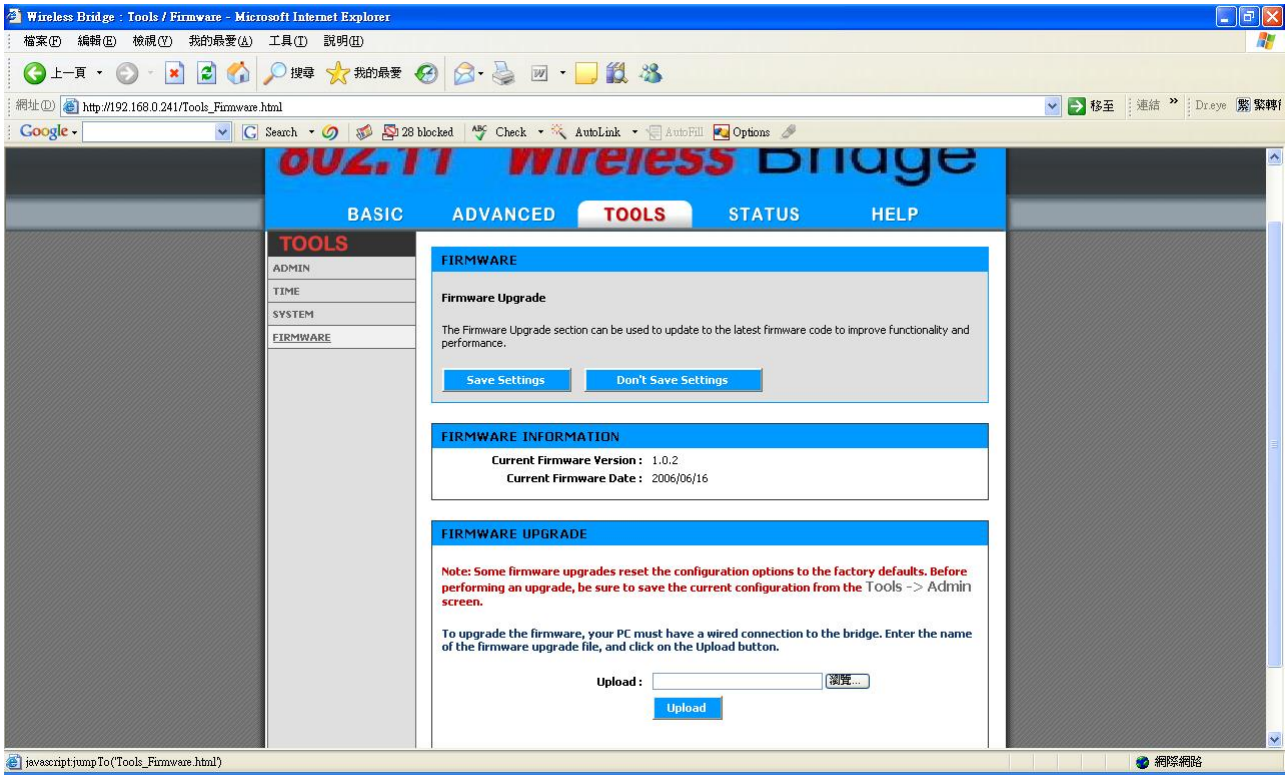

Figure 2-9

Caution The Part 15 radio device operates on a non-interference basis with other devices operating at this frequency when using integrated antennas. Any changes or modification to the product not expressly approved by RUBY TECH Corporation could void the user's authority to operate this device.

Caution To meet regulatory restrictions and the safety of the installation, RUBY TECH Corporation strongly

recommends this product to be **professionally installed**.