4. Open the cover of the printer and remove the ribbon cartridge. Using a soft vacuum brush, gently vacuum the platen, the print head carriage and shaft, and surrounding areas. You can easily slide the print head to the left or right when the power is off. Be careful not to press too hard on the flat head cable that extends from the print head carriage.

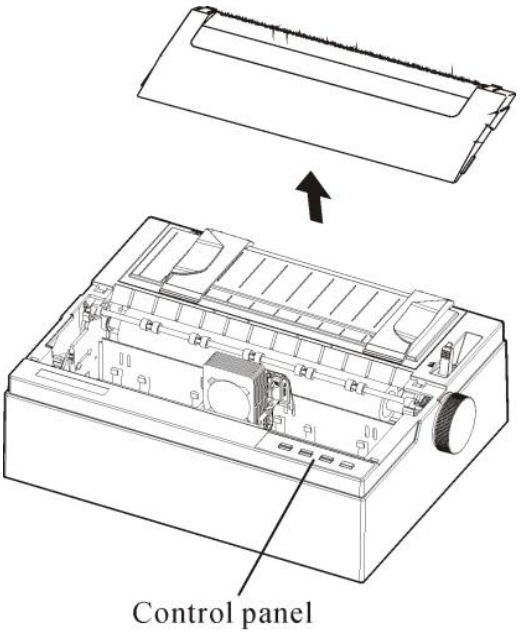

Printer interior

5. Re-install the ribbon cartridge.

6. Remove the single sheet feeder and clean the form tractors and the surrounding areas.

7. Re-install the single sheet feeder.

Cleaning the Platen (Paper Rollers)

Clean the platen and paper bail rollers occasionally or when stains or smudges appear on the paper. Use a mild detergent as appropriate.
Use the platen cleaner recommended by your supplier and proceed as
follows:

1. Apply a small amount of water to a soft cloth. Avoid spilling liquid inside the printer.

   CAUTION

   Do not use alcohol to clean the platen. Alcohol may cause the rubber to harden.

2. Place the cloth against the platen and manually rotate the paper feed knob.

3. Repeat this procedure for each roller.

To dry the platen, place a dry cloth against the platen and the rollers and manually rotate the paper feed knob.

REPLACE THE RIBBON

There are two ways of replacing the ribbon. You can install a new ribbon cassette in the printer or refill the old ribbon cassette with new ribbon from a ribbon sub cassette. Appendix A lists order numbers for ribbon cassettes and ribbon sub cassettes. The following procedure is for ribbon cassettes. For ribbon sub cassettes, refer to the instructions shipped with the sub cassette.

	CAUTION<HOT> **The print head and metal frame is hot during printing or immediately after printing. Do not touch them until it cools down.**

To replace the ribbon cassette:

1. Turn off the printer.

Note:

If the power is turned off during or immediately after printing, turn on the power again. Verify that the print head has moved to the ribbon replacement position, and then turn off the power again.

2. Open the front cover of the printer. Please make sure that the printer head stops at the ribbon replacement position.

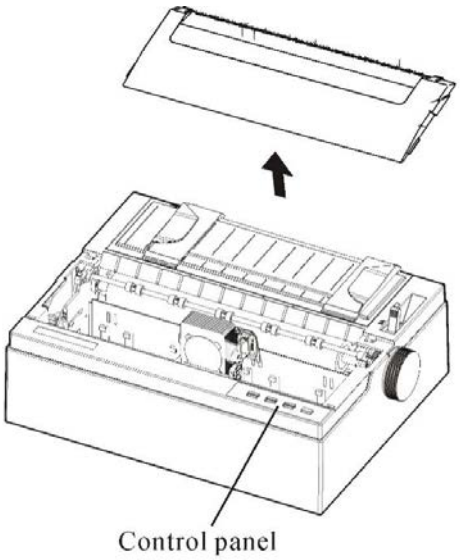

Preparing the printer to install the ribbon cartridge

3. Remove the ribbon guide

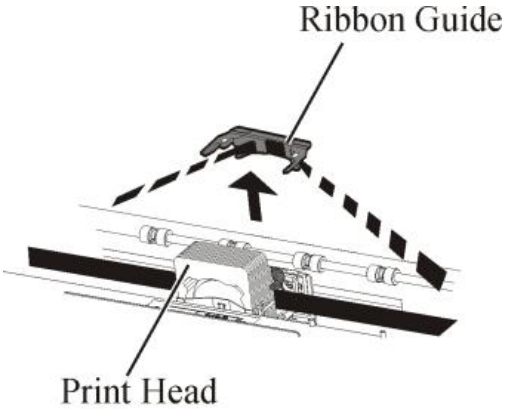

Removing the ribbon guide

4. To remove the ribbon cassette, pull the underside of ribbon cassette and carefully lift the cartridge out of the printer.

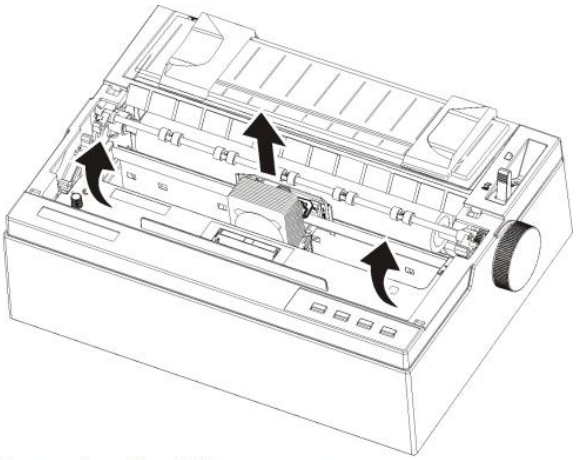

Removing the ribbon cassette

5. Remove the ribbon guide (blue part)from the ribbon cassette.Don’t turn the ribbon feed knob before installation.

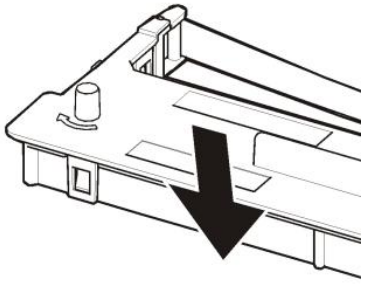

Preparing the ribbon cassette

6. Put the blue ribbon guide into the space in front of print head. And then place the mounting pins (both side of ribbon cassette) on the slot of the printer cover. And then push the ribbon cassette so that the ribbon cassette is installed horizontally.

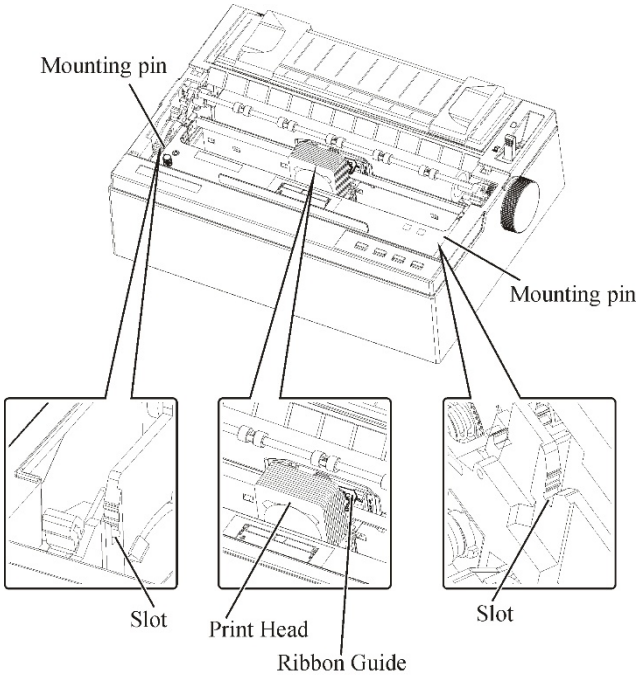

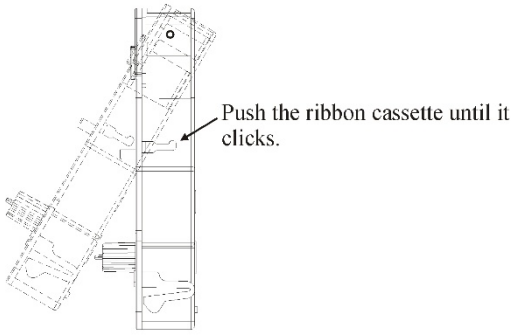

Installing the ribbon cassette

7. Attach the blue ribbon guide on the print head.
   Please make sure that the ribbon slack lightly. (If the ribbon is strained, it will quirk when installation.) Push the blue ribbon guide until it clicks.

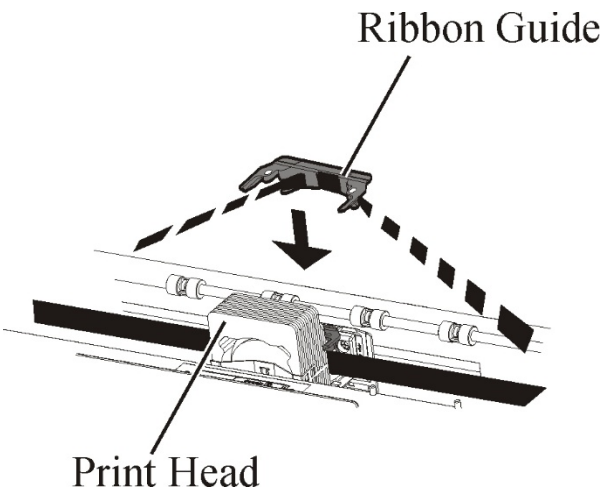

8. Turn the ribbon feed knob clockwise to take up any slack in the ribbon.

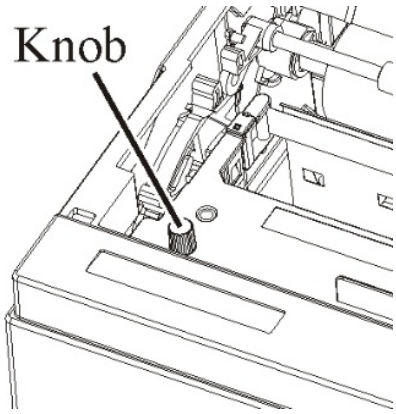

9. Close the front cover.

NOTE

A Fujitsu ribbon cassette is recommended. Don’t use other cassettes.If other cassettes are used, operating problems or a damage of the print head may be caused.

8

TROUBLE-SHOOTING

Your printer is extremely reliable, but occasional problems may occur. You can solve many of these problems yourself, Using this chapter.

If you encounter problems that you cannot resolve, contact your dealer for assistance.

This chapter is organized as follows:

- Solving problems
- Print quality problems
- Paper handling problems
- Operating problems
- Printer failures
- Diagnostic functions
- Getting help

SOLVING PROBLEMS

Print Quality Problems

Poor print quality or other printing problems are often caused by incorrect printer setup or incorrect software settings. A gradual decrease in print quality usually indicates a worn ribbon. Table 7.1 identifies common print quality problems and suggests solutions.

Table 7.1 Print Quality Problems and Solutions

Problem	Solution
Printing is too light or too dark	● Make sure that the ribbon cartridge is properly installed and that the ribbon feeds smoothly. ● Replace the ribbon if necessary. ● Make sure that the print gap lever is set for the thickness of your paper.
Smears and stains appear on the page	● Make sure that the print gap lever is set for the thickness of your paper. ● Check for ribbon wear. Replace the ribbon if necessary. ● Check whether the tip of the print head is dirty. Clean the head with a soft cloth if necessary. ● The print head may need to be replaced.
The paper is blank.	● Make sure that the ribbon cartridge is properly installed. ● Make sure the gap lever is set corretly.

Problem	Solution
Printing is erratic or the wrong characters are printed. Many “?” or unexpected characters are printed.k	● Make sure that the interface cable is securely connected to both the printer and computer. ● Make sure that the printer driver selected in your software is the same as the emulation selected on the printer.
Printing is vertically misaligned (jagged).	● Use the printer's vertical alignment function to check the vertical print alignment. If necessary, adjust the print alignment.
The paper is blank.	● Make sure that the ribbon cartridge is properly installed. ● Make sure the gap lever is set corretly.
The top margin is wrong.	● Check the application top margin setting. ● Adjust the Top Margin setting in Page Setup menu if necessary.
Lines are double spaced instead of single spaced	● Change the Auto LF setting in the System Setup menu to No.
The printer overprints on the same line.	● Change the Auto CR setting in the System Setup menu to No.
The next print line starts where the previous line ended instead of at the left margin.	● Change the Auto CR setting in the System Setup menu to Yes.

Paper Handling Problems and Solutions

Table 7.2 describes common paper handling problems and suggests

Table 7.2 Paper Handling Problems and Solutions

Problem	Solution
Paper cannot be loaded or fed.	● Make sure that the paper select lever located on the top right of the printer is set correctly. Move the lever to the front for single sheets or to the rear for continuous forms. ● Make sure that the paper covers the paper-out sensor.
Paper jams while loading.	● Turn off the printer and remove the jammed paper. Remove any obstructions from the paper path. ● Make sure that the Print Gap lever is set for the thickness of your paper. ● Make sure that the paper is not folded, creased, or torn. ● Make sure that the left and right tractors are set so that the continuous forms are stretched taut.

Problem	Solution
Paper jams while printing.	● Turn off the printer and remove the jammed paper. Remove any obstructions from the paper path. ● Make sure that the Print Gap lever is set for the thickness of your paper. ● For continuous forms, make sure that the incoming and outgoing paper stacks are correctly placed.
Paper slips off the forms tractors or the perforated holes of the paper tear during printing.	Make sure that the forms tractors are positioned correctly for the width of your paper and that the perforated holes of the paper fit directly over the tractor pins.

Operating Problems and Solutions

Table 7.3 identifies common operating problems and suggests solutions.
If you cannot resolve a problem, contact your dealer.

Table 7.3 Operating Problems and Solutions

Problem	Solution
The power does not turn on.	● Check whether the mains voltage is correct. ● Make sure that the power cord is securely connected to both the printer and the mains power outlet. ● Make sure that the power outlet is functional. If not so, use other outlet. ● Turn the power off. Wait a minute and then turn the printer on again. If the printer still has no power, contact your dealer.
The printer is on but it will not print.	● Make sure that the Online indicator is lit. ● If you use the interface cable, make sure it is securely connected to both the printer and the computer. ● Make sure paper is loaded. ● Run the printer Status Page. If printing executes normally, the problem is caused by: the interface, the computer, incorrect printer settings, or incorrect software settings. ● Make sure that the printer driver selected in your software is the same as the emulation selected on the rinter.
Paper select lever error	If paper is loaded and the paper select lever is moved to the incorrect position, the printer turns offline, and the buzzer sounds continuously. Switch the paper select lever back to its correct position.

Printer Failures

A user cannot generally resolve a problem involving defective printer hardware. Power off and on again the printer to recover any fatal error. If the problem cannot be resolved, contact your dealer or service partner

Error Indications on LEDs

Error Description	Power LED	Font1 LED	Font2 LED	Online LED	Buzzer Sound
Print head too hot	Flashing	No change	No change	Flashing	None
Paper path switching problem	Flashing	No change	No change	Flashing	Continuous
Paper jam	Flashing	No change	No change	On	Once
Paper End	Flashing	No change	No change	Off	Once
Carriage initial position	Off	Off	Flashing	Flashing	Continuous
Code Stripe problem	Off	Off	Flashing	Flashing	Continuous
Paper sensor failure	Flashing	No change	No change	Off	Once
Paper width problem	Flashing	No change	No change	Off	None
Print head thermal sensor failure	Off	Off	Off	Flashing	None
WTD error	Off	Off	Off	Flashing	None

Diagnostic Functions

The printer diagnostic functions are Self-Test page, hex-dump mode and print alignment adjustment.

- Self-Test page: Tells you whether the printer hardware is functioning correctly. If the printer hardware is functional, any problems you are having are probably caused by incorrect printer settings, incorrect software settings, the interface, or the computer.
- HEX-DUMP MODE: Allows you to determine whether the computer is sending the correct commands to the printer, and whether the printer is executing the commands correctly. This function is useful to programmers or others who understand how to interpret hex dumps.

PRINTING ALIGNMENT ADJUSTMENT: Allows you to check and, if necessary, correct the printer's vertical line print alignment in bi-directional mode.

For details on using these functions, please refer to chapters 4 and 5.

Getting help

If you are not able to correct a problem using this chapter, contact your dealer for assistance. Be prepared to provide the following information:

- Your printer model number, serial number, and date of manufacture. Look for this information on the rating label at the back of the printer.
- Description of the problem
- Type of interface you are using
- Names of your software packages
- List of the printer default settings. To print the default settings

A

SUPPLIES AND OPTIONS

This appendix lists the supplies and options available for the printer.

Contact your dealer for information on ordering any of these items.

SUPPLIES

Supplies	Order Number
Ribbon cassette Black ribbon	xxxxx
Ribbon sub cassette Black ribbon	xxxxx

OPTIONS

Options	Order number	Description
Cut sheet feeder	xxxxxx	xxxxxx
Tractor Unit	xxxxxx	xxxxxx

B

PRINTER AND PAPER SPECIFICATIONS

This appendix gives the physical, functional, and performance specifications for the printer.

It also gives detailed paper specifications.

PHYSICAL SPECIFICATIONS

Dimensions

Height: 130mm
Width:283.3mm
Length: 369mm

Weight: 4.2kg
(not include the knob and the paper guide)

AC power requirements:
AC 200V ~ 240V ±10%; 50/60 Hz
AC 100V ~ 120V ±10%; 50/60 Hz

Power consumption: Maximum 67w (Standby)

Interface:
- Universal Serial Bus interface 2.0
- Parallel interface (option)
- RS232C (option)
- LAN RJ45(option)

Data buffer size: up to 256K bytes

Download buffer: Maximum 128K bytes
(128K minus data buffer size) 这是指什么用途下的 **Download buffer?**

Operating environment: 5 to 35°C
10% to 80% RH(no condensation)

Storage environment: -20 to 55°C
5% to 85% RH (no condensation)

Acoustic noise: Standard model:Approx57 dB(A) ISO 7779 (Bystander Position-Front)

FUNCTIONAL SPECIFICATIONS

Print method Impact dot matrix with a 0.20 mm, 24-wire head

Print direction Bidirectional logic-seeking or unidirectional seeking

Character cell Horizontal □□ vertica

10cpi:	LQ	:24dots
	NLQ	:18dots
	Draft	:12dots
	High speed Draft	: 8dots
12cpi:	LQ	:30dots
	NLQ	:15dots
	Draft	:10dots
	High speed Draft	:10dots
15cpi:	LQ	:24dots
	NLQ	:12dots
	Draft	:8dots
	High speed Draft	: 8dots
17.1cpi:	LQ	:21dots
	NLQ	:11dots
	Draft	:11dots
	High speed Draft	: 11dots
20cpi:	LQ	:18dots
	NLQ	:9dots
	Draft	:9dots
	High speed Draft	: 9dots

Paper handling

Feed method : Friction / Push tractor / Roll paper(TBD)

Paper pass : Cut sheet (Rear in Top out) Fanfold paper (Rear in Top out)

Paper type 1 to 5-copies for tractor and paper table

Paper size	
Cut sheet :	3.75~10.5 inch (W) x 4.5~14.3 inch (L) 95~ 267 mm (W) x 114.3~363.2 mm (L)
Fanfold paper:	3.75~10.5inch (W) x 4.5~22.0 inch (L) 95~267 mm (W) x 114.3~363.2 mm (L)
Paper thicknes	
	Cut sheet/Fanfold paper： 0.065~0.14mm Copy paper : 0.06~0.065mm * Maximum Total 0.52mm
Page length	1 to 22 inches Programmable in 1/360 inch
Number of copies	Up to 6, including the original
Command sets (**emulations**)	IBM Proprinter XL24E Epson ESC/P2
Character sets	14 international character sets + one legal character set
Fonts	Draft 10, 12, 15, 17.1, 20 Bank Draft 10, 12, 15, 17.1, 20 Roman 10, 12, 15, 17.1, 20cpi and proportional OCR-A 10cpi in NLQ and LQ OCR-B 10cpi in NLQ and LQ Courier, Gothic, SanSerif, Prestige elite, Script, Orator, bold *all in NLQ and LQ style and 10, 12, 15, 16.6, 17.1, 20cpi and proportional
Line spacing	2.3.4.6.8.or 12 lines per inch. Programmable in 1/360 inch
Character pitch	10, 12, 15, 17.1, 20cpi or Proportional. Programmable in 1/360 inch

Characters per line

10cpi: 80cpl
12cpi: 96cpl
15cpi: 120cpl
17.1cpi: 136cpl
20cpi: 160cpl

cpi: characters per inch
cpl: characters per line

Paper Thickness

Paper thickness is given by the weight of the paper in Either grams per square meter (g/m2) or in pounds per bond (lbs/bond). The following table shows the allowable paper thickness for one-part paper or for each sheet of multipart paper. The total thickness must not exceed 0.65 mm (0.026 inch)

The weight of carbonless or carbon-backed paper may vary, depending upon the paper manufacturer. When using paper of borderline thickness, test the paper before running a job.

Type of Paper	Number of Parts	Thickness
One-part	Single	52～100g/m²
Carbonless paper	The first layer	45～65 g/m²
Carbonless paper	The Middle and bottom layer	40～56g/m²

PERFORMANCE SPECIFICATIONS

Print speed

Pitch	High speed draft	Draft	NLQ	LQ
10cpi	450(80dpi)	300(120dpi)	200(180dpi)	120(240dpi)
12cpi	360(120dpi)	360(120dpi)	240(180dpi)	120(360dpi)
15cpi	450(120dpi)	450(120dpi)	300(180dpi)	150(360dpi)
17.1cpi	340(180dpi)	340(180dpi)	340(180dpi)	170(360dpi)
20cpi	400(180dpi)	400(180dpi)	400(180dpi)	200(360dpi)

cpi: characters per inch cps: characters per second

Line feed speed 41.6ms per line at 6 lines per inch
Form feed speed 4 inches per second
Ribbon life Up to 7 million characters

Certification

Safety:

Model	C**ertification**	Regulation	country
M33342A	UL	UL60950-1	United States
	CB	IEC60950-1(for 100 to 120VAC)	/
M33342B	CB	IEC60950-1(for 220 to 240VAC)	/
	CE-LVD	EN60950-1(for 220 to 240VAC)	Europe
	GS	EN60950-1(for 220 to 240VAC)	Germany

EMI regulation:

Model	C**ertification**	Regulation	country
M33342A	FCC	FCC Part15 Subpart B(for 100 to 120VAC)	United States
	IC	ICES-003 Class B(for 100 to 120VAC)	Canada
M33342B	CE-EMC	EN55032 ,EN55024 (for 220 to 240VAC)	Europe

energy regulation:

Model	C**ertification**	Regulation	country
M33342A	**energy star(**ES2.0**)**	ENERGY STAR Program Requirements for Imaging Enquipment:Version 2.0 (for 100 to 120VAC)	United States
M33342B	**energy star(**ES2.0**)**	ENERGY STAR Program Requirements for Imaging Enquipment:Version 2.0(for 220 to 240VAC)	United States,Europe

Harmful material management

Model	Regulation	country
M33342A	RoHS Directive 2011/65/EU	Europe
	REACH :Regulation(EC)No.1907/2006	Europe
M33342B	RoHS Directive 2011/65/EU	Europe
	REACH :Regulation(EC)No.1907/2006	Europe
	German Chemical Prohibition Ordinance (ChemVerbotsV) revised version from 13.6.2003 I 867	Germany

PAPER SPECIFICATIONS

Print Area

This section illustrates the recommended print area for single sheets and continuous forms.

Feeding paper by friction（single paper）

Printing area

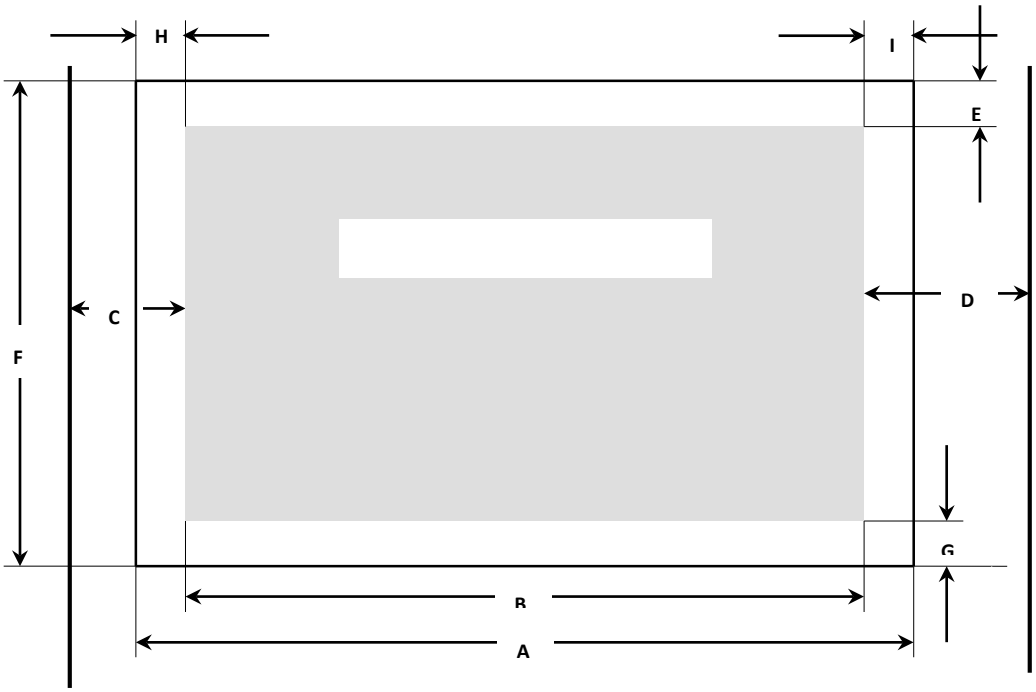

Pos	Title	Min.		Max.	
		mm	Ins	mm	ins
A	paper width	95	3.75	266.7	10.5
B	printable width			203.2	8
C	Max left margin			45TBC	
D	Max right margin			49TBC	
E	top margin min	0	0	25.4	1
E_1	Tolerant top margin	4,23	12/72		
F	Page length	114.3	4.5	363.2	14.3
G	Bottom margin	0	0		
H	Left margin (0 scale position)	0	0		
I	Right margin (0 scale position)	0	0		

Paper specifications

Single paper	52 – 100g/m²
Carbonless Copy Paper	1 + 6
Carbonless Copy Paper – first page	45 – 65g/m²
Carbonless Copy Paper – copy page	40 – 56g/m²
Max printing paper thickness	0.85mm

Push/pull tractor paper feeding (continuous paper)

Printing area

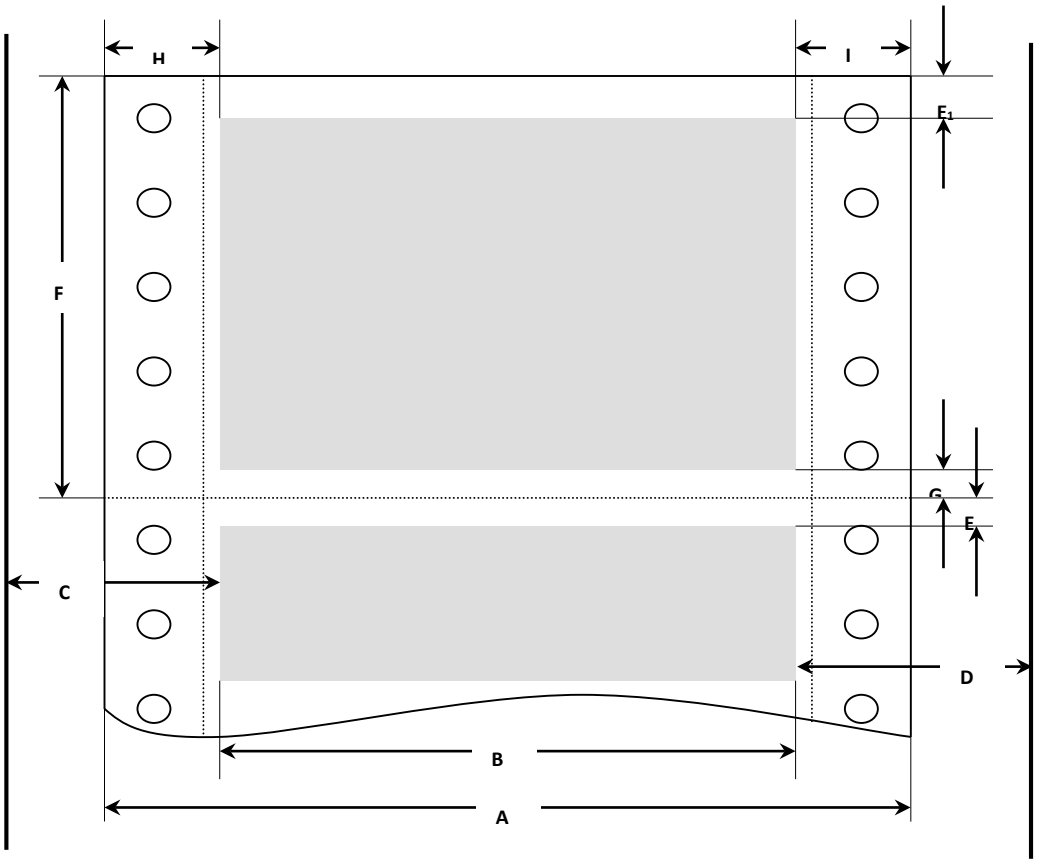

Pos	Title	Min		Max	
		mm	inches	mm	inches
A	Paper width	95	3.75	275	10.8
B	printable width			203.2	8.0
C	Max left margin			31TBC	
D	Max right margin			38TBC	
E	top margin $_{min}$	0	0	25.4	1
E_1	Tolerant top margin	4,23	12/72		
F	Page length	114.3	4.5	363.2	22
G	Bottom margin	0	0		
H	Left margin (0 scale position)	12.7	0.5		
I	Right margin (0 scale position)	12.7	0.5		

Paper specifications

Single paper	52 – 100g/m²
Carbonless Copy Paper	1 + 6
Carbonless Copy Paper – first page	45 – 65g/m²
Carbonless Copy Paper – copy page	40 – 56g/m²
Max printing paper thickness	0.85mm

C

COMMAND SETS

This appendix describes printer commands and their parameters.

This printer has three resident command sets:

- ESC/P2 Emulation Command List
- IBM Emulation Command List
- DPL24C Plus Additional Commands

ESC/P2 Emulation Command List

Function	Command
Mechanical control Beeper Turn unidirectional mode on/off n = 0 Bidirectional printing 1 Unidirectional printing **Notes** • Unidirectional printing provides better alignment of vertical lines, while bidirectional printing is faster.	 BEL ESC U (n)
Moving the print position Carriage return Line feed Form feed Tab horizontally Tab vertically Backspace Set absolute horizontal print position (horizontal position) = ((nH × 256) + nL) × (defined unit) + (left margin) (0 ≤ nH ≤ 127, 0 ≤ nL ≤ 255) **Notes** • Set the defined unit with the ESC (U command. • The default defined unit setting for this command is 1/60 inch. • The new position is measured from the current left-margin position. • The printer ignores this command if the specified position is to the right of the right margin. Set relative horizontal print position (horizontal position) = ((nH × 256) + nL) × (defined unit) + (current position) (0 ≤ nH ≤ 127, 0 ≤ nL ≤ 255) **Notes** • Set the defined unit with the ESC (U command. • The default defined unit for this command is	 CR LF FF HT VT BS ESC $ (nL) (nH) ESC \ (nL) (nH)

1/120 inch in draft mode, and 1/180 inch in LQ mode. • The new position is measured from the current position. • The printer ignores this command if it would move the print position outside the printing area.	ESC (V (nL) (nH) (mL) (mH)
Set absolute vertical print position (vertical position) = ((mH × 256) + mL) × (defined unit) + (top-margin position) (nL = 2, nH = 0,0 ≤ mL ≤ 255, 0 ≤ mH ≤ 127) **Notes** • Set the defined unit using the ESC (U command. • The default defined unit for this command is 1/60 inch.	
• The new position is measured in defined units from the current top-margin position. • Moving the print position below the bottom-margin position produces the following results: Continuous paper Moves the vertical print position to the top-margin position on the next page,single-sheet paper Ejects the paper	ESC (v (nL) (nH) (mL) (mH)
Set relative vertical print position (vertical position) = ((mH × 256) + mL) × (defined unit) + (top-margin position) (nL = 2, nH = 0,0 ≤ mL ≤ 255, 0 ≤ mH ≤ 127) **Notes** • Set the defined unit using the ESC (U command. • The default defined unit for this command is 1/60 inch.	
• The new position is measured in defined units from the current position. • Moving the print position below the bottom-margin position produces the following results: Continuous paper moves the vertical print position to the top-margin position on the next page,single-sheet paper Ejects the paper.	ESC J (n)
Advance print position	

Advances the vertical print position n/180 inch (0 ≤ n ≤ 255) **Notes** • ESC J does not affect the horizontal print position. • Moving the print position below the bottom-margin position produces the following results: Continuous paper moves the vertical print position to the top-margin position on the next page,single-sheet paper Ejects the paper. Reverse paper feed Reverse feeds paper (moves the print position in the negative direction) n/180 inch. (0 ≤ n ≤ 255) **Notes** • Do not reverse-feed paper more than 1/2 inch; the vertical print position may not be accurate otherwise.	ESC j (n)
Selecting characters Select double-width printing (one line) Select double-width printing (one line) Cancel double-width printing (one line) Turn double-width printing on/off n = 1 Turns on double-width 0 Turns off double-width Turn double-height printing on/off n = 1 Turns on double-height 0 Turns off double-height **Notes** • This command does not affect line spacing. Select condensed printing Select condensed printing Cancel condensed printing Set intercharacter space Select character style Turns on/off outline and shadow printing, according to the parameters below: n = 0 Turn off outline/shadow printing 1 Turn on outline printing 2 Turn on shadow printing 3 Turn on outline and shadow printing	SO ESC SO DC4 ESC W (n) ESC w (n) SI ESC SI DC2 ESC SP ESC q (n)

Select superscript/subscript printing	ESC S
Cancel superscript/subscript printing	ESC T
Select line/score d1 = 1 Underline 2 Strikethrough 3 Overscore d2 = 0 Turn off scoring 1 Single continuous line 2 Double continuous line 5 Single broken line 6 Double broken line	ESC (-
Turn underline on/off n = 1 Turns underline on 0 Turns underline off	ESC –
Select double-strike printing	ESC G
Cancel double-strike printing	ESC H
Master Select Selects any combination of several font attributes and enhancements by setting or clearing the appropriate bit in the n parameter, as shown below:	ESC ! (n)

Bit	On/ Off	Hex	Dec	Function	Equivalent
0	Off	00	0	Selects 10 cpi	ESC P
	On	01	1	Selects 12 cpi	ESC M
1	Off	00	0	Cancels proportional	ESC p 0
	On	02	2	Selects proportional	ESC p 1
2	Off	00	0	Cancels condensed	DC2
	On	04	4	Selects condensed	SI
3	Off	00	0	Cancels bold	ESC F
	On	08	8	Selects bold	ESC E
4	Off	00	0	Cancelsdouble-strike	ESC H

	On	10	16	Selects double-strike	ESC G
5	Off	00	0	Cancels double-width	ESC W 0
	On	20	32	Selects double-width	ESC W 1
6	Off	00	0	Cancels italics	ESC 5
	On	40	64	Selects italics	ESC 4
7	Off	00	0	Cancels underline	ESC - 0
	On	80	128	Selects underline	ESC - 1

Add the numbers of the features to be selected and send the total as the parameter n.

Select italic font — ESC 4
Cancel italic font — ESC 5
Select bold font — ESC E
Cancel bold font — ESC F
Turn proportional mode on/off — ESC p (n)

n = 0 Returns to current fixed character pitch
1 Selects proportional spacing

Notes

- Changes made to the fixed-pitch setting with the ESC P, ESC M, or ESC g commands during proportional mode take effect when the printer exits proportional mode.
- The printer automatically switches to LQ printing when proportional spacing is selected.

Select 10 cpi — ESC P
Select 12 cpi — ESC M
Select 15 cpi — ESC g

Set horizontal motion index (HMI) — ESC c (nL) (nH)

Fixes the character width (HMI) according to the following formula:

HMI =((nH × 256)+ nL)/360inch

$0 \le nH \le 4, 0 \le nL \le 255$,

HMI ≤ 3.00 inches

Select typeface — ESC k (n)

Selects the typeface for LQ printing according to the following values: n=0 Roman 1 Sans serif 2 Courier 3 Prestige 4 Script 5 OCR-B 6 OCR-A	ESC x (n)
Select LQ ,NLQ or draft Selects either LQ, draft or NLQ printing according to the following values: n = 0 Draft printing 1 Letter-quality printing 2 Near Letter-quality printing	ESC y (n)
Select Draft/Super Draft Selects draft/super draft for ANK characters in accordance with the value for n. n = 00H draft setting 01H Super draft setting **Notes** •If super draft is specified draft (ESC x 0) should be selected	ESC % (n)
Select user-defined set Switches between normal and user-defined characters, as follows: n = 0 Normal (ROM) characters 1 User-defined (RAM) characters	ESC & NUL (n)
Define user-defined characters Sets the parameters for user-defined characters and then sends the data for those characters,as described below: n Character code of the first character to be user-defined m Character code of the last character to be user-defined a0 Space to the left of each proportional user-defined character a1 Actual width of user-defined characters a2 Space to the right of each proportional user-	(m) (a0 a1 a2.d1.d2 . . . . dk)

defined character

d1 . . . dk Character data

(0 ≤ n ≤ 127,0 ≤ m ≤n)

LQ mode Draft mode

0 ≤ a1 ≤ 37 0 ≤ a1 ≤ 15

0 ≤ a0 + a1 + a2 ≤ 42 0 ≤ a0 +a1 + a2 ≤ 18

Normal characters Super/subscript characters

k = 3Xa1 k = 2Xa1

Notes

Print quality	10cpi	12cpi	15cpi	Proportional
Draft Normal size	24 X12	24 X10	24 X8	Not Available
Draft Super/sub script	16 X12	16X10	16X8	Not Available
LQ Normal size	24X36	24X30	24X24	24X42
LQ Super/sub script	16X36	16X30	16X24	16X42

•The following maximum character widths are recommended.
(heightXwidth)

• Send the ESC % 1 command to switch to user-defined characters.

•Set n=m when only 1 character is defined.

ESC R (n)

Select an international character set

Selects the set of characters printed for specific character codes, as listed below:

n = 0 USA
1 France
2 Germany
3 United Kingdom
4 Denmark I
5 Sweden
6 Italy
7 Spain I
8 Japan (English)
9 Norway

10 Denmark II
11 Spain II
12 Latin America

Notes

The characters printed for each international character set are listed below:

n	Set name	Dec Hex	35 23	36 24	64 40	91 5B	92 5C	93 5D	94 5E	96 60	123 7B	124 7C	125 7D	126 7E
0	USA		#	$	@	[	\	]	^	`	{	|	}	~
1	France		#	$	à	°	ç	§	^	`	é	ù	è	¨
2	Germany		#	$	§	Ä	Ö	Ü	^	`	ä	ö	ü	ß
3	UK		£	$	@	[	\	]	^	`	{	|	}	~
4	Denmark I		#	$	@	Æ	Ø	Å	^	`	æ	ø	å	~
5	Sweden		#	¤	É	Ä	Ö	Å	Ü	é	ä	ö	å	ü
6	Italy		#	$	@	°	\	é	^	ù	à	ò	è	ì
7	Spain I		Pt	$	@	¡	Ñ	¿	^	`	¨	ñ	}	~
8	Japan (Eng)		#	$	@	[	¥	]	^	`	{	|	}	~
9	Norway		#	¤	É	Æ	Ø	Å	Ü	é	æ	ø	å	ü
10	Denmark II		#	$	É	Æ	Ø	Å	Ü	é	æ	ø	å	ü
11	Spain II		#	$	á	¡	Ñ	¿	é	`	í	ñ	ó	ú
12	Lat America		#	$	á	¡	Ñ	¿	é	ü	í	ñ	ó	ú

ESC (t (nL) (nH) (d1) (d2) (d3)

Assign character table

Assigns the d2 registered character table to the d1 character table according to the following values (the d1 character table is one of the three tables selectable with the ESC t command):

d2	d3	Table name
0	0	Italic
1	0	PC437 (US)
3	0	PC850 (Multilingual)
4	0	PC851 (Greek)
7	0	PC860 (Portuguese)
8	0	PC863 (Canadian-French)
9	0	PC865 (Nordic)
10	0	PC852 (Eastern Europe)
11	0	PC857 (Turkish)
13	0	PC864 (Arabic)
13	7	ISO_8859_7
14	0	PC866 (Russian)
24	0	PC861 (Icelandic)
25	0	BRASCII (Braz Portuguese)
26	0	Abicomp (Braz Portuguese)
27	0	MAZOWIA (Poland)

28	0	KAMENICKY
29	7	ISO 8859-7 (Latin/Greek)
29	15	ISO 8859-15
32	0	Bulgaria
35	0	Roman 8
42	0	PC720
43	255	ISO 8859-1
44	0	PC858
45	0	PC771
46	255	ISO 8859-9
48	255	PC1250
49	0	PC1251
50	0	PC1252
51	0	PC1253
52	0	PC1254
55	0	PC1257
112	0	OCR-B
127	1	ISO 8859_1
127	2	ISO 8859-2 (ISO Latin 2)
60	255	CRO_ASCII
65	255	E_UK
66	255	E_US_ASCII
70	255	GREEK_DEC
72	255	E_SWEDEN
75	255	E_GERMAN
76	255	PORTUGUESE
79	255	COAX_TWINAX
82	255	E_FRANCE
89	255	E_ITALY
90	255	E_SPAINI
96	255	E_NORWAY
108	255	ELOT_928
114	255	TABLE_1252
115	255	TABLE_1253
116	255	TABLE_1254
129	255	NEW_437
131	255	NEW_DIG_850
142	255	TABLE_866
148	255	TABLE_737
149	255	TABLE_864
150	255	FARSI
151	255	URDO

152	255	OLD_CODE_860	
153	255	FLARRO_863	ESC t (n)
154	255	TABLE_865	
157	255	BULGARIA_866	

Select character table

Selects the character table to be used for printing from among the three character tables described below:

n = 0 Character table 0
1 Character table 1
2 Character table 2

Default

table 0 Italic
table 1 PC437
table 2 User-defined characters

Notes

- Use the ESC (t command to assign any registered character table to any character table.

Set QUIET mode

Parameter n is as follows:

N = 0, automatically determines the number of prints according to the segmentation mode

1. print once ，The segmentation is invalid

2,print twice， parity printing

3,print thrice, 8 dots/group

ESC s (n)

Data and memory control	
Initialize printer	ESC @
Cancel Line	CAN
Delete last character in buffer	DEL

Setting the units	
Set unit	ESC (U (nL) (nH) (m)

Sets the unit to m/3600 inch. The printer uses this unit when moving the print position,setting the page length, and setting the top and bottom margins with the following commands: ESC (V, ESC (v, ESC \, ESC $, ESC (C, ESC (c

(nL = 1, nH = 0,m = 5, 10, 20, 30, 40, 50, 60)

Select 1/8 inch line spacing	ESC 0
Select 1/6 inch line spacing	ESC 2

	Set n/180 inch line spacing Sets the line spacing to n/180 inch (0 ≤ n ≤ 255)	ESC 3 (n)
	Set n/360 inch line spacing Sets the line spacing to n/360 inch (0 ≤ n ≤ 255)	ESC + (n)
	Set n/60-inch line spacing Sets the line spacing to n/60 inch (0 ≤ n ≤ 85)	ESC A (n)
	Set horizontal tabs Sets horizontal tab positions (in the current character pitch) at the columns specified by n1 to nk, as measured from the left-margin position (0 ≤ k ≤ 32,1 ≤ n ≤ 255,nk > n(k-1)) **Default** Every eight characters **Notes** • The values for n must be in ascending order; a value of n less than the previous n ends tab setting (like the NUL code). • Send an ESC D NUL command to cancel all tab settings. • The tab settings move to match any movement in the left margin. • A maximum of 32 horizontal tabs can be set.	ESC D (n1 n2 . . . nk NUL)
	Set vertical tabs Sets vertical tab positions (in the current line spacing) at the lines specified by n1 to nk, as measured from the top-margin position (0 ≤ k ≤ 16,1 ≤ n ≤ 255,nk > n(k-1)) **Notes** • The values for n must be in ascending order; a value of n less than the previous n ends tab setting (just like the NUL code). • The tab settings move to match any subsequent movement in the top-margin position.	ESC B (n1 n2 . . . nk NUL)

• Send an ESC B NUL command to cancel all tab settings. • A maximum of 16 vertical tabs can be set.	
Setting the page format Set page length in defined unit (page length) = ((mH × 256) + mL) × (defined unit) (nL = 2, nH = 0,0 < ((mH × 256) + mL) × (defined unit) ≤ 22)	ESC (C (nL) (nH) (mL) (mH)
Set page format Sets the top and bottom margins in the defined units(set with the ESC (U command) according to the following formulas: (top margin) = ((tH × 256) + tL) × (defined unit) (bottom margin) = ((bH × 256) + bL) × (defined unit) (nL = 4, nH = 0, top margin < bottom margin, bottom margin < 22 inches) ((tH × 256) + tL) < ((bH × 256) + bL) ((bH × 256) + bL) × (defined unit) ≤ 22 **Default** Continuous paper: None Single-sheet paper: (top margin) = top-of-form position (bottom margin) = last printable line **Notes** • Measure both top and bottom margins from the top edge of the page. • Send this command before paper is loaded, or when paper is at the top-of-form position. Otherwise, the current print position becomes The top-margin position (this results in undesirable contradictions between the actual and logical page settings). • Changing the defined unit does not affect the current page-length setting.	ESC (c (nL) (nH) (tL) (tH) (bL) (bH)
Set page length in lines	ESC C (n)

Sets the page length to n lines in the current line spacing （1 ≤ n ≤ 127，0 < n × (current line spacing) ≤ 22 inches）	ESC C NUL (n)
Set page length in inches Sets the page length to n inches (1 ≤ n ≤ 22)	ESC N (n)
Set bottom margin Sets the bottom margin on continuous paper to n lines (in the current line spacing) from the top-of-form position on the next page. (0 < n ≤ 127,0 < (current line spacing) × n < (page length))	ESC O ESC Q (n)
Cancel bottom margin	
Set right margin Sets the right margin to n columns in the current character pitch, as measured from the left most printable column (1 ≤ n ≤ 255) (left margin) < (current pitch) × n ≤ (printable area width)	ESC l (n)
Set left margin Sets the left margin to n columns in the current character pitch, as measured from the left most printable column (1 ≤ n ≤ 255) 0 ≤ (left margin) <(right margin)	
Control-code character printing Print data as characters • Prints data bytes d1 through dk as characters, not control codes • The amount of data to be sent is calculated as follows: $k = ((n_H \cdot 256) + n_L)$ (0 ≤ nH ≤ 127,0 ≤ nL ≤ 255)	ESC (^ (nL) (nH) (d1 . . . dk)
Enable printing of upper control codes Tells the printer to treat codes from 128 to 159 as printable characters instead of control codes	ESC 6

Enable upper control codes Tells the printer to treat codes from 128 to 159 as control codes instead of printable characters	ESC 7
Printing color and graphics Select graphics mode Selects graphics mode (allowing you to print raster graphics) (nL = 1,nH = 0,m = 1)	ESC (G (nL) (nH) (m)
Print raster graphics • Prints dot graphics in raster format (row by row, left to right) • Allows compression of graphics data during raster graphics printing; counters can be included with data to specify the number of times to repeat a particular byte of data • Parameters are used as described below: c = 0 Full graphics mode (noncompressed) 1 Compressed raster graphics (Run Length Encoding) mode v Vertical resolution in dpi—720, 360, 180 (3600/v dpi) h Horizontal resolution in dpi—720, 360, 180 (3600/h dpi) m Vertical dot count (rows of dot graphics) nL, nH Horizontal dot count (columns of dot graphics), according to the following formula: nH = INT(horizontal dot count)/256 nL = MOD(horizontal dot count)/256 k Total number of data bytes, according to the following formula: k = mX INT((nHX256)+nL + 7)/8) d During full graphics mode: Graphics data During RLE compressed raster graphics mode (ESC . 1): The first data byte is treated as a counter. Graphics data bytes then alternate with a data counter byte (run-length data compression), as follows: 0 ≤ (counter byte) ≤ 127 Counter specifies the number of data bytes	ESC .c (v h m nL nH d1 d2 . . . dk)

following according to the formula below.
(counter byte) + 1 = (number of data bytes to follow) or
(counter byte) = (number of data bytes to follow) – 1
128 ≤ (counter byte) ≤ 255
Counter specifies the number of times to repeat the next byte of data
according to the formula below.
256 – (counter byte) + 1 = (number of times to repeat next byte)
(counter byte) = 257 – (number of times to repeat next byte)

(c = 0 ,1,v = 5,10, 20,h = 5,10, 20,m = 1, 8, 24)
(0 ≤ nL ≤ 255,0 ≤ nH ≤ 127,0 ≤ d ≤ 255)

The following vertical and horizontal printing resolution combinations are available:

v	h	v(dpi)	h(dpi)	m
20	20	180	180	1,8 or 24
20	20	180	360	1,8 or 24
10	10	360	360	1,8 or 24

Stylus COLOR only

5	5	720	720	1(with special paper)

Notes

- Use only one image density and do not change this setting once in raster graphics mode.
- When MicroWeave is selected, the image height m must be set to 1.
- Special coated stock paper available from EPSON is required when printing raster graphics at 720 dpi.
- This command can be used only during graphics mode, entered by sending the ESC (G command.
- The final print position is the dot after the far right dot on the top row of the graphics printed with this command.
- Print data that exceeds the right margin is ignored.

ESC * (m

• Do not specify the vertical movement in increments smaller than the current print density.

nL nH d1 . . . dk)

Select bit image

Prints dot-graphics in 8, 24-dot columns, depending on the following parameters:

m Specifies the dot density (see table below)

nL, nH Specifies the total number of columns of graphics data that follow

(number of dot columns) = ((nH × 256) + nL)

nH = INT(number of dot columns)/256

nL = MOD(number of dot columns)/256

d1 . . . dk Bytes of graphics data; k is determined by multiplying the total number of columns times the number of bytes required for each column (see the table below)

(0 ≤ nL ≤ 255,0 ≤ nH ≤ 31)

m = 0, 1, 2, 3, 4, 6, 32, 33, 38, 39, 40

Dot density

m	Horizontal density (dpi)	Vertical density (dpi)	Adjacent dot printing	Dots per column	Bytes per column
0	60	60	Yes	8	1
1	120	60	Yes	8	1
2	120	60	No	8	1
3	240	60	No	8	1
4	80	60	Yes	8	1
6	90	60	Yes	8	1
32	60	180	Yes	24	3
33	120	180	Yes	24	3
38	90	180	Yes	24	3
39	180	180	Yes	24	3
40	360	180	No	24	3

ESC ? (n)(m)

Reassign bit-image mode

Assigns the dot density used during the ESC K, ESC L, ESC Y, or ESC Z commands to the density specified by parameter m in the ESC * command

n = 75, 76, 89, 90(ASCII code of K,L,Y,Z)

m = 0, 1, 2, 3, 4, 6, 32, 33, 38, 39, 40, 71, 72, 73

ESC K (nL nH d1 d2 . . .

Select 60-dpi graphics

	Prints bit-image graphics in 8-dot columns, at a density of 60 horizontal by 60 vertical dpi,according to the following parameters: nL, nH Specify the total number of columns (k) of graphics data following,according to the formula k = ((nH × 256) + nL) nH = INT(k/256) nL = MOD(k/256) d1 . . . dk Bytes of graphics data (0 ≤ nL ≤ 255,0 ≤ nH ≤ 31,0 ≤ d ≤ 255) **Notes** • The ESC * 0 command is identical to this command; use ESC * 0 instead of this command. • The dot density printed with this command can be redefined with the ESC ? command.	dk)
	Select 120-dpi graphics Prints bit-image graphics in 8-dot columns, at a density of 120 horizontal by 60 vertical dpi,according to the following parameters: nL, nH Specify the total number of columns (k) of graphics data following,according to the formula k = ((nH × 256) + nL) nH = INT(k/256) nL = MOD(k/256) d1 . . . dk Bytes of graphics data （0 ≤ nL ≤ 255，0 ≤ nH ≤ 31，0 ≤ d ≤ 255） **Notes** • The ESC * 1 command is identical to this command; use ESC * 1 instead of this command. • The dot density printed with this command can be redefined with the ESC ? command.	ESC L (nL nH d1 d2 . . . dk)
	Select 120-dpi, double-speed graphics Prints bit-image graphics in 8-dot columns, at a density of 120 horizontal by 60 vertical dpi,according to the following parameters: nL, nH Specify the total number of columns (k) of graphics data following, according to the formula k = ((nH × 256) + nL)	ESC Y (nL nH d1 d2 . . . dk)

nH = INT(k/256) nL = MOD(k/256) d1 . . . dk Bytes of graphics data （0 ≤ nL ≤ 255，0 ≤ nH ≤ 31，0 ≤ d ≤ 255） **Notes** • The ESC * 2 command is identical to this command; use ESC * 2 instead of this command. • The speed is double because consecutive horizontal dots cannot be printed; the printer ignores the second continuous horizontal dot. • The dot density printed with this command can be redefined with the ESC ? command.	
Select 240-dpi graphics Prints bit-image graphics in 8-dot columns, at a density of 240 horizontal by 60 vertical dpi,according to the following parameters: nL, nH Specify the total number of columns (k) of graphics data following,according to the formula k = ((nH × 256) + nL) nH = INT(k/256) nL = MOD(k/256) d1 . . . dk Bytes of graphics data （0 ≤ nL ≤ 255，0 ≤ nH ≤ 31，0 ≤ d ≤ 255） **Notes** • The ESC * 3 command is identical to this command; use ESC * 3 instead of this command. • The speed is double because consecutive horizontal dots cannot be printed; the printer ignores the second continuous horizontal dot. • The dot density printed with this command can be redefined with the ESC ? command.	ESC Z(nL nH d1 d2 . . . dk)
Printing bar codes Bar code setup and print Prints bar codes. • Parameters are used as described below: nL, nH Total number of data bytes to follow,	ESC (B (nL nH k m s v1 v2 c

determined by the following equation:
(number of data bytes) = 6 bytes + BarCodeData bytes = ((nH × 256) + nL) (where 6 bytes are k, m, s, v1, v2, and c)
nH = INT(number of data bytes)/256
nL = MOD(number of data bytes)/256
(0 ≤ nL ≤ 255,0 ≤ nH ≤ 127)

k Bar code type

(0 ≤ k ≤ 7)

K(hex)	Bar code type
00	EAN-13
01	EAN-8
02	Interleaved 2 of 5
03	UPC-A
04	UPC-E
05	Code 39
06	Code 128
07	POSTNET

m Module width

(2 ≤ m ≤ 5)

m	24-pin printer (unit 1/180 inch)
02	2 dots
03	3 dots
04	4 dots
05	5 dots

s Space adjustment value

24-pin printer	-3 ≤ s ≤ 3 (unit 1/360 inch)

(-3 ≤ s ≤ 3)

v1, v2 Bar length

24-pin printer	bar length = $v_1 + v_2 \cdot 256$ (unit 1/180 inch

(0 ≤ v1 ≤ 255, 0 ≤ v2 ≤ 127)
The v1 and v2 values are ignored when POSTNET is selected.
Long bar length of POSTNET is always 0.125 inch.
Short bar length of POSTNET is always 0.050 inch.

c Control flag

c	Control flag
bit 0	Check digit 0: A check digit is not added by the printer. 1: A check digit is added by the printer.

BarCodeData)

bit 1	Human readable character 0: The human readable characters are added by the printer. 1: The human readable characters are not added by the printer.
bit 2	Position of flag character (for EAN-13 and UPC-A only) 0: Center 1: Under
bit 3	(reserved)
bit 4	(reserved)
bit 5	(reserved)
bit 6	(reserved)
bit 7	(reserved)

(0 ≤ c ≤ 255)

BarCodeData Corresonds to the bar code symbology.

The data number of each bar code type is constant.

The bar code is not printed if the number of bar code characters are incorrect.

Bar code type	Number of valid Characters1(hex)	Number of valid characters 2(hex)
EAN-13	0D	0C
EAN-8	08	07
Interleaved 2 of 5	02 to FF	02 to FF
UPC-A	0C	0B
UPC-E	0C or 8	0B or 7
Code 39	01 to FF	01 to FF
Code 128	02 to FF	02 to FF
POSTNET	06 or 0A or 0C	05 or 09 or 0B

Number of valid characters 1: control flag c bit 0 = 0

Number of valid characters 2: control flag c bit 0 = 1

The valid data of each bar code type are following.If an invalid data is included in the BarCodeData string, the bar code is not printed.

Bar code type	Valid range of BarCodeData
EAN-13	0-9 (30H-39H)
EAN-8	0-9 (30H-39H)

Interleaved 2 of 5	0-9 (30H-39H)
UPC-A	0-9 (30H-39H)
UPC-E	0-9 (30H-39H)
Code 39	0-9 (30H-39H), (41H-5AH) (20H, 24H, 25H, 2BH, 2DH, 2EH, 2FH)
Code 128	Code Set A, Set B, Set C
POSTNET	0-9 (30H-39H)

Notes

- Bar code printing is always performed unidirectionally.
- The bar code is not printed when part of the bar code is out of the right margin.
- Bar code and text data are mixed in a line.
- A kind of Code 128 character sets (A, B or C) is identified by the first data of Code 128.
  The first data must be a hexadecimal 41 (A), 42 (B) and 43 (C).
- When Code 128 Character Set C and Interleaved 2 of 5 is selected and the number of characters are ODD, “0” is added to the data string.

IBM Emulation Command List

Function	Command
Mechanical control	
Beeper	BEL
Beeper	ESC BEL
Turn unidirectional mode on/off n = 0 Bidirectional printing 1 Unidirectional printing	ESC U (n)
Moving the print position	
Carriage return	CR
Carriage return	ESC CR
Line feed	LF
Line feed	ESC LF
Form feed	FF
Form feed	ESC FF
Tab horizontally	HT
Tab horizontally	ESC HT
Tab vertically	VT
Tab vertically	ESC VT
Backspace	BS
Backspace	ESC BS
Automatic Line Feed n = 0 To end automatic line feed (LF) on carriage return (CR) (CR= CR) 1 To begin automatic line feed (LF) on carriage return (CR)(CR＝CR＋LF)	ESC 5 (n)
Move Current Print Position This command moves the current print position to the right in increments of 1/120 inch. Current Print Position =(nH × 256) + nL)	ESC d (nL) (nH)
Move Paper Vertically Advances the paper in a vertical movement a distance of n/216 inches relative to the current print position.	ESC J (n)
Reverse Line Feed	ESC]

Selecting characters	
Select double-width printing (one line)	SO
Select double-width printing (one line)	ESC SO
Cancel double-width printing (one line)	DC4
Cancel double-width printing (one line)	ESC DC4
Turn double-width printing on/off n = 1 Turns on double-width 0 Turns off double-width	ESC W (n)
Select Print Type Style This command is used for varying the type style of the character and the number of line spacing. Use this printer command for: • Italic print • Single-high character • Double-high character • Single-wide character • Double-wide character • Single line feed • Double line feed • Shadow (for 239x Plus only) • Outline (for 239x Plus only)	ESC [@ 4 0 (m1) 0 (m3) m4)

Notes

• You may combine these selections; for example,italic print with doublehigh,double-wide character, and double line feed.See the following table for m1, m3, and m4 selections.

m1	Dec	Hex
No Change	0	0
Start Italic Print	1	1
Stop Italic Print	2	2
Start Outline Print	4	4
Stop Outline Print	8	8
Start Shadow Print	16	10
Stop Shadow Print	32	20

m2=0

m3	Dec	Hex
No Change	0	0
Single-high Character	1	1
Double-high Character	2	2
Single Line Feed	16	10
Double Line Feed	32	20

m4	Dec	Hex
No Change	0	0
Single-wide Character	1	1
Double-wide Character	2	2
Single Line Feed	16	10
Double Line Feed	32	20

Select condensed printing — SI
Select condensed printing — ESC SI
Select superscript/subscript printing — ESC S
Cancel superscript/subscript printing — ESC T
Turn underline on/off — ESC - (n)

n = 1 Turns underline on
0 Turns underline off

ESC _ (n)

Turn Overscore on/off

n = 1 Turns Overscore on
0 Turns Overscore off

ESC [I 2 0 (fH fL)

Select Font and Pitch

This command allows you to vary the font and pitch type style within a file.

- The fH and fL variables identify the pitch and font typestyle you want to print. Follow table describe the fH and fL variables.

Decimal fH fL	Hex fH fL	Font and Pitch
0 11	00 0B	Courier 10CPI
1 235	01 EB	Courier 12CPI
1 236	01 EC	Courier 15CPI
1 237	01 ED	Courier 17CPI
1 238	01 EE	Courier 20CPI
1 30	01 1E	Courier 24CPI
0 171	00 AB	Courier PS
0 36	00 24	Gothic 10CPI
1 143	01 8F	Gothic 12CPI
1 142	01 8E	Gothic 15CPI
1 141	01 8D	Gothic 17CPI
1 140	01 8C	Gothic 20CPI
1 32	01 20	Gothic 24CPI
0 174	00 AE	Gothic PS
0 12	00 0C	Prestige 10CPI
1 239	01 EF	Prestige 12CPI
1 240	01 F0	Prestige 15CPI
1 201	01 C9	Prestige 17CPI
1 202	01 CA	Prestige 20CPI
1 31	01 1F	Prestige 24CPI
0 164	00 A4	Prestige PS
0 25	00 19	Presentor 10CPI
1 208	01 D0	Presentor 12CPI
1 209	01 D1	Presentor 15CPI
1 210	01 D2	Presentor 17CPI
1 211	01 D3	Presentor 20CPI
1 35	01 23	Presentor 24CPI
0 199	00 C7	Presentor PS

0 5	00 05	Orator 10CPI
1 203	01 CB	Orator 12CPI
1 204	01 CC	Orator 15CPI
1 205	01 CD	Orator 17CPI
1 206	01 CE	Orator 20CPI
1 33	01 21	Orator 24CPI
0 198	00 C6	Orator PS
1 212	01 D4	Script 10CPI
1 213	01 D5	Script 12CPI
1 214	01 D6	Script 15CPI
1 215	01 D7	Script 17CPI
1 216	01 D8	Script 20CPI
1 36	01 24	Script 24CPI
0 200	00 C8	Script PS

ESC [d 1 0 (n)

Set Print Quality

This command sets the print quality to draft or letter quality. the value of n can be any of the following:

Decimal	Hex	Speed
0	0	No change
1~63	01~3F	High draft
64~127	40~7F	Draft
128~254	80~FE	LQ
255	FF	Default speed

ESC [- 2 0 (loc) (type)

Score Select

This command selects several forms of overscore, underscore, and strikethrough.

To select loc:

loc	Underscore	Strikethrough	Overscore
Decimal	1	2	3
Hex	01	02	03

To select type:

type	Cancel score	Single line	Double line
Decimal	0	1	2
Hex	00	01	02

ESC G

Select double-strike printing — ESC H

Cancel double-strike printing — ESC I (n)

Select character font

This command enables you to select a font and choose the print quality.

n(HEX)	n(DEC)	Font and print quality
00	00	Normal (DRAFT) 10 cpi
08	8	Normal (DRAFT) 12 cpi
10	16	Normal (DRAFT) 17 cpi
02	2	Normal (LQ)10 cpi - Courier
0A	10	Normal (LQ)12 cpi - Prestige
12	18	Normal (LQ)17pi - Courier
03	3	Normal (LQ) Proportional-Couri
04	4	Downloaded 10 cpi DRAFT
0C	12	Downloaded 12 cpi DRAFT
14	20	Downloaded 17cpi DRAFT
06	6	Downloaded 10 cpi LQ
0E	14	Downloaded 12 cpi LQ
16	22	Downloaded 17 cpi LQ
07	7	Downloaded Proportional LQ

.

Select bold font — ESC E

Cancel bold font — ESC F

Turn proportional mode on/off — ESC P

n = 0 Returns to current fixed character pitch

1 Selects proportional spacing

Select 10 cpi — DC2

Select 10 cpi — ESC DC2

Select 12 cpi — ESC :

Select character set 2 — ESC 6

This command selects IBM character set II for use in subsequent printing operations.

Select character set 1 — ESC 7

This command selects IBM Character set I for use in subsequent printing operations.

ESC = (n1) (n2) 20 (n3) (n4) (n5) data

Define user-defined characters

- This command enables you to define and download characters for printing.
- Monospaced characters are designed on a grid eleven dots wide by twelve dots high. The width of proportionally spaced characters is specified in n5.

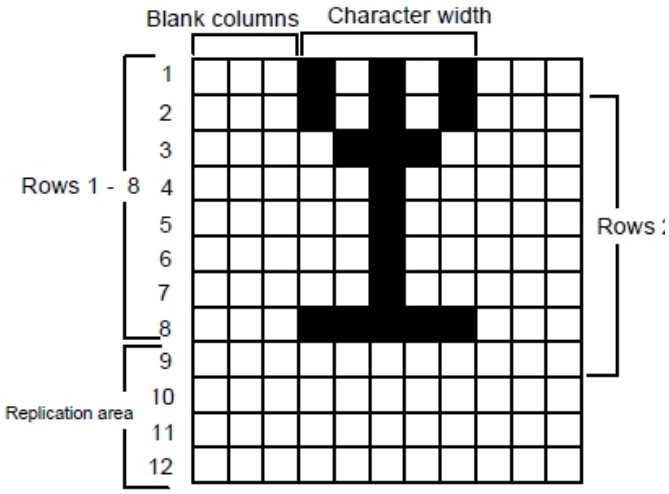

- n1 and n2 define the number of characters to be defined as follows: number of characters = ((n1+(n2*256)-2)/13.
- n3 is the character code of the first character in the sequence to be defined. It is assumed that you are defining a sequence of characters whose code numbers increment by one for each character to be defined.
- If bits 1 and 2 of n4 are 0 and bit 8 is set to 1, the bytes that make up the character definition define the top eight rows of the grid, the most significant bit representing the top dot, and the least significant bit representing the eighth dot down. Simply set a bit to 1 to print a dot in that position on the grid, or to 0 to print white space.
- If bits 1 and 2 of n4 are 00 and bit 8 is set to 0 the bytes that make up the character definition define rows 2 to 9 of

the grid, the most significant bit representing the second dot, and the least significant bit representing the ninth dot down. Simply set a bit to 1 to print a dot in that position on the grid, or to 0 to print white space.

• If bits 1 and 2 of n4 are 01 the least significant bit of each data byte is replicated in rows 9 to 12 of the grid.

• If bits 1 and 2 of n4 are 10 the bits 1 to 4 of each data byte are replicated in rows 9 to 12 of the grid.

• Bits 5 to 7 of n5 specify the number of columns left blank to the left of the defined character in proportional spacing mode. Up to seven columns can be skipped.

• Bits 1 to 4 of n5 specify the width in columns of the defined character in proportional spacing mode.Up to fifteen columns can be used to define the character.

• Downloaded characters are selected using the Esc I command and then printed by sending the appropriate character codes.

ESC [T 4 0 0 0 (cH) (cL)

Select Code Page

The digits 4 0 0 0 (decimal), 04 00 00 00 (hexadecimal) are constants.

See below table for the value of cH and cL

	Decimal		Hex		
Code page	cH	cL	cH	cL	
437	1	181	01H	B5H	
737	2	225	02H	E1H	
ISO_8859_7	3	45	03H	2DH	
ISO_8859_1	3	51	03H	33H	
850	3	82	03H	52H	
851	3	83	03H	53H	

852	3	84	03H	54H	
857	3	89	03H	59H	
858	3	90	03H	5AH	
860	3	92	03H	5CH	
861	3	93	03H	5DH	
863	3	95	03H	5FH	
864	3	96	03H	60H	
865	3	97	03H	61H	
866	3	98	03H	62H	
869	3	101	03H	65H	
USSR	42	114	2AH	72H	

Setting the units

Set Vertical Units — ESC [\ 4 0 0 0 (n1) (n2)

The digits 4 0 0 0 (decimal), 04 00 00 00 (hexadecimal) are constants.

This command lets you set the size of the increments for the following commands:

- Set Line Spacing for Graphics (ESC 3)
- Move Paper Vertically (ESC J).

n1(Hex)	n2(Hex)	Unit
D8H	00H	1/216 inch
B4H	00H	1/180 inch
68H	01H	1/360 inch

Select 1/8 inch line spacing — ESC 0

Select 7/72 inch line spacing — ESC 1

Select 1/6 inch line spacing — ESC 2

Set n/216 or n/180 inch line spacing — ESC 3 (n)

This command sets line spacing to n/216(AGM=No) or n/180(AGM=Yes) inches. It does not cause the form to move. It changes the vertical distance moved when a line feed command is received.

Set n/72 or n/60-inch line spacing — ESC A (n)

This command sets line spacing in n/72 inch (AGM=No) or n/60 inch(AGM=Yes) increments. To activate the line spacing, use the printer command Activate Line Spacing for Text (ESC 2).

Set horizontal tabs This command sets up to 28 tabulation stops to be used with the printer command HT, Horizontal Tabulation. n1.....n28 is used to set the tabulator stop positions. • ESC D is terminated by a 0 entry. • The first tabulation stop is at the leftmost column. • Input the tabulation stops (n1.....n28) in ascending numerical order • The printer command ESC R resets to the default horizontal tabulation stops, which are set at every eight positions beginning at column 9 (9, 17,25, and so on). • The printer command HT, Horizontal Tabulation, activates the tabulation stops set by this printer command. (1≤n≤255, 1≤k≤28)	ESC D n1.....nk NULL
Set vertical tabs • Use ESC B to set the tabulation stops and to advance paper to the next tabulation stop (VT) to activate them. • ESC R (Set Default Tabulation Stops) will clear all vertical tab stops. • Set the tabulation stops in ascending order (n1.....n32). • The last digit in the sequence must be a 0 to terminate the command. (1≤n≤255, 1≤k≤32)	ESC B n1…nk NULL
Set Default Tab Stops	ESC R
Setting the page format Set top of form Set page length in lines The value of n is the number of lines you want to set as the page length and works in conjunction with the current	ESC 4 ESC C (n)

line spacing	
Set page length in inches The value of n is the number of inches you want to set as the page length.	ESC C NUL (n)
Set bottom margin This command specifies the number of lines to be skipped at the bottom of each page, which creates a bottom margin.	ESC N (n)
Cancel bottom margin	ESC O
Set horizontal margins This command sets the left and right margins,n1 and n2 specify the number of the colums. • Use n1 to select the left margin position. • Use n2 to select the right margin position.	ESC X n1 n2
Control-code character printing	
Print Characters from a Code Page • This command enables you to print characters from the All Character Code table. • n1 and n2 specify the number of characters to be printed. • The number of characters printed is 256*n2+n1. • Control codes included in the character data are not executed.	ESC \ n1 n2
Print one character • This command enables you to print a single character from the All Character Code table. • A control code is not executed if the code is sent immediately following this instruction.	ESC ^
Printing graphics	
Select graphics mode Use this command to select the mode	ESC [g nL nH mode

and horizontal density for dot matrix graphics.

• nL and nH identify the number of bytes in mode and data.

• mode is the vertical wire count and the horizontal density in dots per inch. Select mode from the following table.

Dec	Hex	Horizontal Density	Wires
0	00	60	8
1	01	120	8
2	02	120	8
3	03	240	8
8	08	60	24
9	09	120	24
11	0B	180	24
12	0C	360	24

• data is the bit-mapped graphics information. The printhead moves at half the speed of mode 2, giving better resolution.

data

Select bit image

When AGM mode is selected, prints dot-graphics in 8, 24-dot columns, mode is the same as the mode value of the command ESC [g

• nL and nH identify the number of bytes in mode and data.

Select mode from the following table.

m(dec)	Horizontal density (dpi)	Wires
0	60	8
1	120	8
2	120	8
3	240	8
4	80	8
6	90	8
32	60	24
33	120	24

ESC * mode nL nH data

38	90	24
39	180	24
40	360	24

Select 60 dpi graphics

Use this command to print normal density bit images at 60 dots per inch (dpi) horizontally and 72 dpi vertically.

- nL and nH identify the number of bytes in data.
- data is the bit-mapped graphics information.

ESC K nL nH data

Select 120 dpi graphics

Use this command to print normal density bit images at 120 dpi horizontally and 72 dpi vertically.

- nL and nH identify the number of bytes in data.
- data is the bit-mapped graphics information.

ESC L nL nH data

Select 120 dpi, double-speed graphics

Use this command to print dual-density bit images at 120 dpi horizontally and 72 dpi vertically.

- nL and nH identify the number of bytes in data.
- data is the bit-mapped graphics information.

ESC Y nL nH data

Select 240 dpi graphics

Use this command to print high-density bit images at 240 dpi horizontally and 72 dpi vertically.

- nL and nH identify the number of bytes in data.
- data is the bit-mapped graphics information

ESC Z nL nH data

Printing bar codes

Set barcode data

Must set the parameters/attributes in

ESC [f n1 n2 k m

this command before the ESC [p command.

Valid values:

n1=6

n2=0

0≦m≦4

-3≦s≦3

0≦v1≦255

0≦v2≦127

0≦c≦255

s v1 v2 c

k: specifies barcode types

k(Hex)	Barcode Type
B1	CODABAR(NW7)
B2	EAN-13
B3	EAN-8
B4	CODE 39
B5	INDUSTRIAL 2 OF 5
B6	INTERLEAVED 2 OF 5
B7	UPC-A
B8	UPC-E
B9	POST-NET(Barcode)
BA	CODE128

m: specifies the module width.

m	Unit 1/120 inch	Width
00	2dots	0.015”
01	2dots	0.012”
02	2dots	0.015”
03	3dots	0.021”
04	4dots	0.026”

s: specifies the space adjustment value.

-3≦s≦3 (unit 1/360 inch)

v1,v2: specifies the height of barcode.

v1+v2*256 (unit 1/180 inch)

v1+v2*256≧288

c: check digit control

c	Check Digit
bit0	0: not computed. 1: compute and print check digit.

bit1	0：print human readable characters. 1： not printed.
bit2	Position of check digit (for EAN-13and UPC-A only) 0： Center 1： Below
bit3	Reserved
bit4	Reserved
bit5	Reserved
bit6	Reserved
bit7	Reserved

Print barcode This command prints the barcode data. Number of data： k=n1+n2*256 Barcode data: d1 d2…dk	ESC [p n1 n2 d1 d2…dk

DPL24C Plus Additional Commands	Function	Command
	Specifications of Extended Commands Set bottom margin ①Description a. *n/180* inch from the last line to bottom page edge is left blank. b. When the command is received before the bottom page edge passing the page end senor, this command is valid on the same page onward; otherwise, the command is effective from the next page. c. This command is reset by power-on the printer, *INPRM, or the reset command. e. This command is not open to public. ② Valid value a. n=0 ③ Default value a. Fanfold：Setting in Set Up「CONT-PE」 b. Cut sheet：6.35mm（bottom edge of the page to center of the print head. ④ Cancel this command a. Fanfold：power-on the printer, *INPRM, or reset command.	ESC + e+Z+n (1B 65 5A n)
	Set high speed print mode ① Description a. *n* enables or terminates the high speed print mode. b. n=00H，30H terminates high speed print mode. n=01H，31H enables high speed print mode. c. This command is effective for ANK or bit-image graphics. d. This command is invalid for *n* out of range. e. This command is not open to the public. f. Once this command is received, it is effective for the whole print line. ② Valid values a. n=00H,01H,30H,31H ③ Default value a. Terminate high speed print mode. ④ Cancel this command a.power-on the printer, *INPRM, or reset command. ⑤ Co-relation with other commands a. High speed is ineffective on barcode printing.	ESC + e+X+n (1b 65 58 n)

b. High speed is ineffective for emphasis ESC E or ESC! n. Print Test Page ① Description a. n=00H，30H commands the printer to print the Test Page. b. This command is invalid for *n* out of range c. Valid for DPL24C+, ESC/P2, XL24E only. d. This command is not open to the public. e. This command leads the rest of the line. f. The Test Page from this command is identical to the panel operation. Terminate this command by power-off the printer, or by the same way on the panel operation. ② Valid value a. n=00H,30H ③ Default value a. No Test Page printed.	ESC + e+?+n (1b 65 3F n)
Set top margin ① Description a. (n_1 x 256 + n_2)/180 inch from the first line to top page edge is left blank. 通过参数 n1、n2，指定 现在选择使用的纸张通道的 进纸量。 b. Valid only for DPL24C+. c. This command is invalid for *n* out of range. d. This command is not open to the public. e. The set value will not affect the values in Set Up 「XXX-ORG」, 「XXXFINE」. f. This command is effective only when Set Up「TOF-CTL:DRI VER」. ② Valid values a. Type Valid value of（n1x256+n2） Maximum Cutsheet, CSF 360（50.8mm） Fanfold 2700（381mm） Minmum All 30（4.2mm） ③ Default value a. Set Up「CNT-ORG」,「CNTFINE」,「CUT-ORG」, 「CUTFINE」settings ④ Cancel this command a. power-on the printer, *INPRM, or reset command.	ESC + e+Y+n1+n2(1b 65 59 n1 n2)

Set Copy mode (stronger print force) ① Description a. Value of *n* enable or terminate the COPY mode. b. n=00H，30H terminates the COPY mode. n=01H，31H enable the COPY mode. c. This command is effective for ANK or bit-image graphics. d. This command is invalid for *n* out of range. e. This command is not open to the public.。 Once this command is received, it is effective from this line onward.. f. The print speed is reduced when COPY mode is active. ② Valid values a. n=00H,01H,30H,31H ③ Default value a. COPY mode is disabled. ④ Cancel this command a. power-on the printer, *INPRM, or reset command. ⑤ Co-relation with other commands a. Barcode commands: supported. b. High speed command ESC e X *n*: supported. c. Emphasis ESC E and ESC ! *n*: supported.	ESC + e+z+n (1b 65 7A n)
Set Auto Tear-Off ① Description (1) Values of p_1 turn on or off the auto Tear-Off feature. p_1 Auto Tear-Off Function <00>16，<01>16 Disabled <30>16，<31>16 Enabled (2) This command is saved when cutsheet is in use. The setting is activated when replaced with fanfold. (3) The setting in TEAR-EN of SET UP determines the OFFSET timing. (4) This command is invalid for *n* out of range. (5) Power-on the printer, *INPRM, or reset command restore the value in SET UP. ② Valid values P1 = <00>16，<01>16 <30>16，<31>16	ESC + e+3+p1 (1b 65 33 n)
Barcode Space Adjustment	ESC +

① Description

(1) Value of p_1 defines the adjust amount on the width of a space in barcode. (Use two's complement for negative values.)

p_1	Space Adjustment
-3<FD>16	-3/360 inch
-1<FE>16	-1/360 inch
0<00>16	0 (default)
1<01>16	1/360 inch
2<02>16	2/360 inch
3<03>16	3/360 inch

（2）Positive and negative p_1 increase and decreases, respectively, the width of a space element.

（3）"space width" is the total space occupied by a narrows space, a wide space and the gap between a character.

（4）Power-on the printer, *INPRM, or reset command restore the default space width.

（5）This command acts on subsequent received barcode commands.

② Valid values

P1=<00>16，<01>16，<02>16，<03>16，<FD>16，<FE>16，

（-3 ≤ P1 ≤ 3）

e+5+p1 (1b 65 35 n)

Barcode Control

① Description

a. Define and print barcode.

② Valid values

a. *b* number of data, in byte = actual data +6

b. R（fixed）

c. *c* defines type of barcode. (Invalid *c* causes no printing.)

c			Barcode Type
ASCII	Decimal	Hex	
1	49	31	Codabar(nw-7)
2	50	32	EAN 13
3	51	33	EAN 8
4	52	34	Code 3 to 9
5	53	35	Industrial 2 of 5

ESC+DC4 +b+R+c+w +h+a+ch1 …+chn (1b 14 b 52 c w h a ch1…chn)

6	54	36	Interleaved 2 of 5
7	55	37	Matrix 2 of 5
A	65	41	UPC type A
B	66	42	CODE 128
a	97	61	UPC type A with check character

d. *w* width of narrow bar in 1/1440 inch unit.

Actual bar width is converted to 1/180 inch unit:

w	Narrow bar width
1~19	2 dot (2/180 inch)
20~27	3 dot (3/180 inch)
28	4 dot (4/180 inch)

e. *h* defines the narrow bar height in 1/1440 inch unit. *h* ≤11 inch)

For actual printout, a dot is 1/180 inch in height. When the bar or the last portion is not a multiple of 24 dots, the initial height is shown below:

Narrow bar width	EAN 13 UPC-A	EAN 8	Others
2 dot	162dot	130dot	108dot
(16/1440")	(1296/ 1440")	(1040/ 1440")	(864/1440")
3dot	234dot	2dot	2dot
(24/1440")	(1872/ 1440")	(1496/ 1440")	(1080/1440 ")
4dot	312dot	2dot	2dot
(32/1440")	(2496/ 1440")	(1992/ 1440")	(1296/1440 ")

（）Values in brackets are conversions in 1/1440 unit.

f. a check digit and OCR control

Bit	Description	Value	Function
0	Indicate if the check digit is attached *1	0	Attached
		1	Not attached

1	OCR (by default, OCR-B)	0	Printed
		1	Blank
2	Position of flag characters for EAN, UPC. *3	0	Barcode's left centererd.
		1	Below barcode's left side

*1 Bit 0 is ineffective for Codabar, by default without check digit. Usually define Bit 0 =0 for EAN13，EAN8，UPC Type A,UPC Type A with check character.
*2 Reserve additional XX spaces to print the flag character if bit 1 = 0.
*3EAN13，EAN8，UPC Type A,UPC Type A with check character can print it .

g.（ch1）…（chn）
Max. character and character set for different type of barcodes.:

Type	Encoded Characters	*n* Character Length
Codabar	Numbers：0~9 Symbols：+ - . $ / : Start/Stop： A,a,B,b,C,c,D,d, T,t,N,n,*,E,e	1≤n≤34 Start/Stop symbols, included.
EAN 13	Numbers：0~9	n=12, fixed
EAN 8	Numbers：0~9	n=7, fixed
Code 3 of 9	Numbers：0~9 alphabet：A~Z symbol：+ - . $ / : SPACE Start/Stop：*	Check Digit included 1≤n≤31
Industrial 2 of 5	Numbers：0~9	Check Digit included
Interlieved2 of 5	Numbers：0~9	1≤n≤32
UPC Type A	Numbers：0~9	n=11 ,fixed
UPC Type A with checkcharac ter	Numbers：0~9	n=11 ,fixed
CODE 128	ASCII Code	Check Digit

	Start Code：A,B,C Code Set C:0~9	included 1≤n≤62 Check Digit not attached 1≤n≤63 Code Set C:2n

③ Default value
④ Cancel this command
⑤ Co-relation with other commands
⑥ Others
a. Not printed if exceeds the right margin.

Set Quiet Mode
Print noise is reduced in Quiet mode.
Function
(1) Values of p_1 define the on/off of Quiet mode.

P_1	Function
<00>16，<30>16	Normal mode
<01>16，<31>16	Quiet mode

(1) Independent of when this command is received, it takes immediate effect onward.
(2) This command is invalid for *n* out of range.
(3) Keep the current status even when *INPRM or Reset command are received. (Same specification as panel operation.)

Valid Values
P1 = <00>16，<30>16
<01>16，<31>16

ESC+e+0+P1

D

INTERFACE INFORMATION

This printer can communicate with a computer through a Centronics parallel interface, a RS-232C serial interface, a USB interface, or a LAN interface. You can specify the interface selection mode so that the printer uses which interface or it can automatically select the interface from which it first recrives data.

This appendix provides information you may need for wiring your own interface cables or for programming computer-to-printer communications. Most users do not need the information in this appendix. To simply connect your printer to your computer, follow the instructions in Chapter 2

Parallel interface

$\overline{\text{STROBE}}$

Normally synchronous input signal is used to prompt that the data is sending to the port. Normal state is high logic level, while low logic level indicates DATA1～DATA8 will read the current data. The minimum pulse width is 0.5 microsecond.

DATA1~DATA8

Signals to receive data sent from host. Logic 1 is high level and the minimum pulse width is 1.5 microseconds. DATA1 is least significant bit while DATA8 is most significant bit.

$\overline{\text{ACK}}$

Signal to request sending data from host. ACK acts as the output signal when the printer is ready for receiving new data after previous data is read and saved in DATA 1～DATA8. Normal state is high logic level. After activating, it turns to low logic level. The pulse width is about 4 microseconds.

BUSY

Signal to indicate that the printer is not ready for receiving data. If the host ignores it and continues to send data, the data will be lost. The signal turns to high logic level in the following case:

- Buffer is full.
- Offline mode
- Error condition
- PRIME signal is activated.

The signal will be clear after INIT signal turns to high logic level and the printer initializes.

PE

Signal to indicate that the printer is out of paper. High logic level indicates paper out state.

SELECT

Signal to indicate online or offline state. High logic level indicates online state. If no mechanical defect and PE error, the signal turns to high logic level in the following case:

- Press 【**OFFLINE**】 if the printer is offline.
- The printer receives online command when it is set to offline by offline command.

The signal turns to low logic level in the following case:

- Press 【**OFFLINE**】 if the printer is online.
- The printer receives offline command.
- Defective condition
- Paper out

$\overline{\text{AFXT}}$（Valid for Epson ESC/P2 emulation only）

When the signal is set to low logic level and CR control code is implemented, LF command will be added.

GND

Signal to ground.

F-GND

Signal to connect to the base of the printer.

+5V

Signal to connect to +5V output. For maintenance only. Max. load (current) is 50mA.

$\overline{\text{INIT}}$

Reset signal to indicate the printer is initialized. Normal state is high logic level while low logic level is effective. The minimum pulse width is 50 microseconds. It is necessary for the printer to initialize all the mechanical functions before this signal enters ready state, or it may cause damage to the printer.

$\overline{\text{FAULT}}$

Signal to indicate error condition. Low logic level is effective. The signal turns to low logic level in the following case:

- Paper out
- Error or defective condition

FUSE

Signal connect to +5V through 3.3KΩ resistance.

$\overline{\text{SLCTIN}}$（Valid for Epson ESC/P2 emulation only）

When the signal is low logic level, no DC3 control code or DC1 control code is received.

Clock and signal logic level

Clock

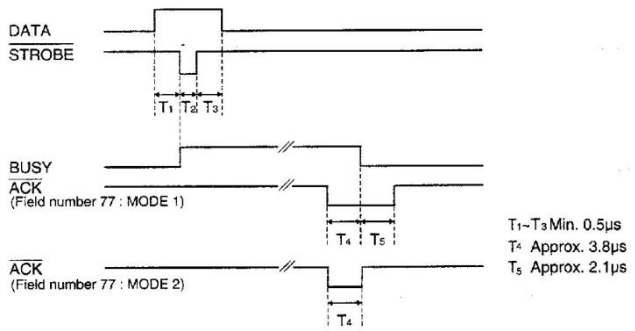

Signal logic level

Input:high logic level: 2～5V low logic level: 0～0.8V

Output: high logic level: 2.4～5V low logic level: 0～0.4V

Parallel interface connector diagram

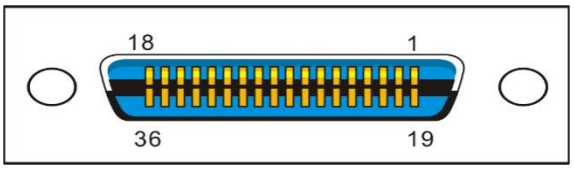

Note:

1. Use a standard parallel interface cable to connect the

printer and the computer. The length should not exceed 2 meters. Connect the 25P plug to the computer, and connect the 36P plug to the printer.

2. Normally PR2-Olivetti emulation does not support parallel printing mode. Please use serial interface to print.

USB interface

USB interface pin assignment

Pin	Signal name	Description
1	VBUS	+5V power supply
2	D-	data
3	D+	data
4	S.GND	ground

USB interface connector diagram

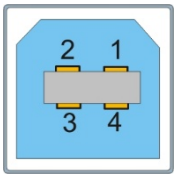

Note:

1. Use a standard USB interface cable to connect the printer and the computer.

2. Normally PR2-Olivetti emulation does not support USB printing mode. Please use serial interface to print.

Serial interface

RS-232C can be used as serial interface.
Settings:
Data bit： 7 or 8
Buffer： 128K Max.
Baud Rate： 9600BPS，19200BPS，38400BPS，300BPS，600BPS，1200BPS，2400BPS，4800BPS
Protocol： DTR Xon/Xoff
Start bit：1 Stop bit：1 or 2

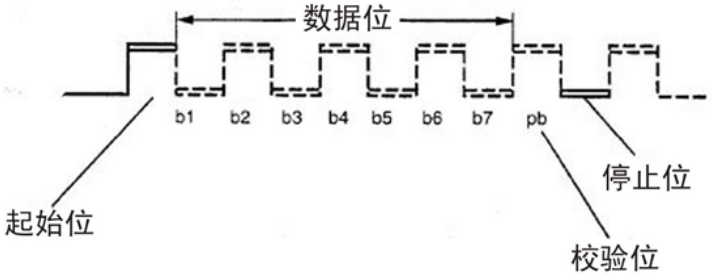

Error detection
Parity： None, odd，even
Frame error： The stop bit is not within the predetermined frame length after the start bit.
Overflow error：Before the data sent from the host to the UART and ready for printing, send the data again.
Attention ： If the above error occurs, print the corresponding error information. Image errors will also be printed as image data.

Serial interface pin assignment

Pin	Signal name	Description
1		
2	RXD	Receive data
3	TXD	Send data
4	DTR	Data terminal ready
5	SGND	Signal ground
6	DSR	Data set ready
7	RTS	Request to send
8	CTS	Clear to send
9		

Serial interface connector diagram

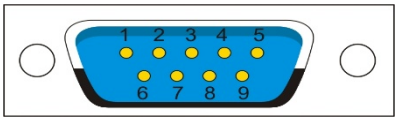

Serial interface wiring diagram

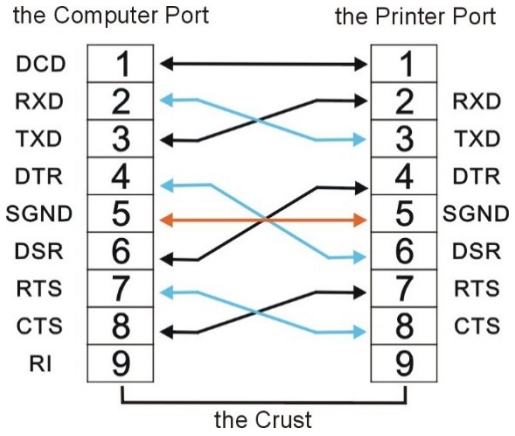

Note:

1. The serial cable length should not exceed 15 meters.

2. Make sure the "Interface Setup" selects serial interface and the settings are the same as PC communication port settings. Shown as below:

Interface:	Share	Share
Baud Rate:	38400	38400
Data Bit:	8	8
Parity Check:	None	None
Stop Bit:	1	1
Data Stream:	Hardware	Hardware

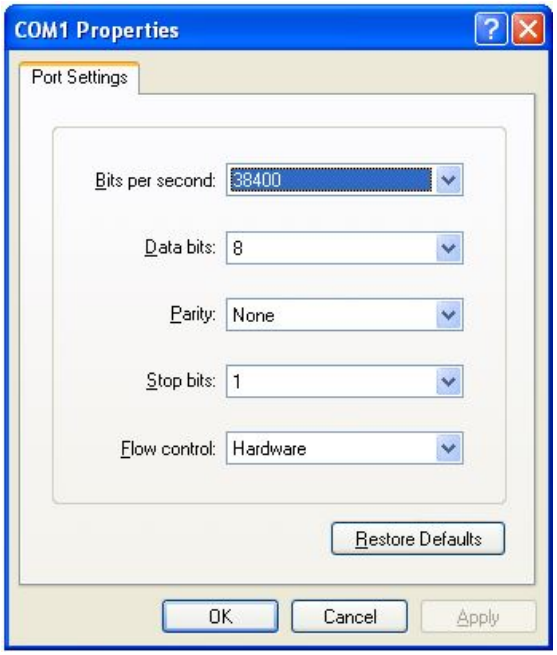

Signal description

The signal electrical level of the interface pin is defined as follow:

1 is low level（Mark） -25V~-3V

0 is high level（Space） +3V~+25V

DTR protocol（RS-232C）

Pin2（receiving data）

Receiving the serial data sent from the host with this line, so when no data is sent, the host must be set to MARK.

Pin4 DTR（Data terminal）

When the printer ready for receiving data，the signal is SPACE（high level）,when the printer did not receive data, the signal is MARK(low level).

Pin 5 SGND(Signal ground lines)

Signal ground

XON/XOFF（RS-232C）

Pin2 RXD(Receiving data)

Receiving the serial data sent from the host with this line, so when no data is sent, the host must be set to MARK.

Pin3 TXD(Sending data)

Receiving the serial data sent from the host with this line, so when no data is sent, the host must be set to MARK.

Pin4 DTR(Data terminal)

When connecting to the printer, the signal sent from printer is SPACE (high level).

Pin 5 SGND(Signal ground lines)

Signal ground

Pin 7 RTS(Request to send)

When connecting to the printer, the signal sent from printer is SPACE (high level).

Ethernet interface

The use of Ethernet interface

1、Install Ethernet interface board into the printer. Connect PC and the printer using the network cable. Turn on the printer to connect Config tool. The user interface is shown as below.

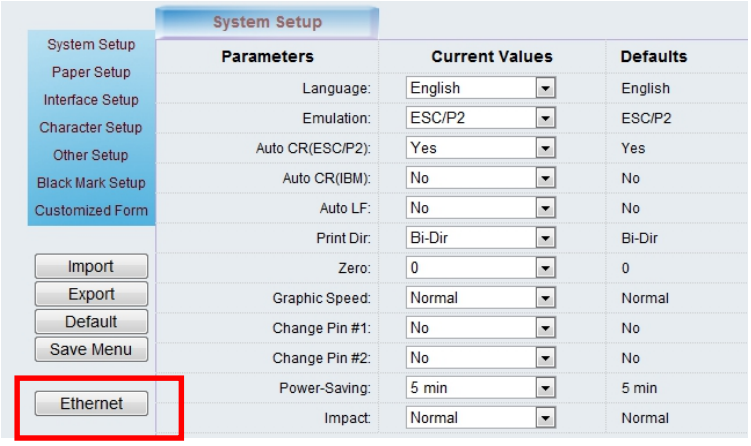

2、Click “Ethernet” in step 1 to display the parameter setup for Ethernet as below.

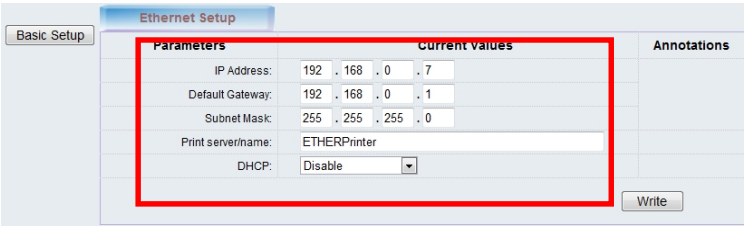

Parameters	Function
IP Address	Printer IP address can be changed when needed.
Default Gateway	Default Gateway
Subnet Mask	Subnet Mask
Print server name	Name of the print server
DHCP	Disable or Enable DHCP.

3、Set printer IP address to be the same net segment as PC IP address in step 2. Disconnect Config tool after the Ethernet parameters are setup. The printer restarts automatically.

Follow following instructions to add the print port in the driver.

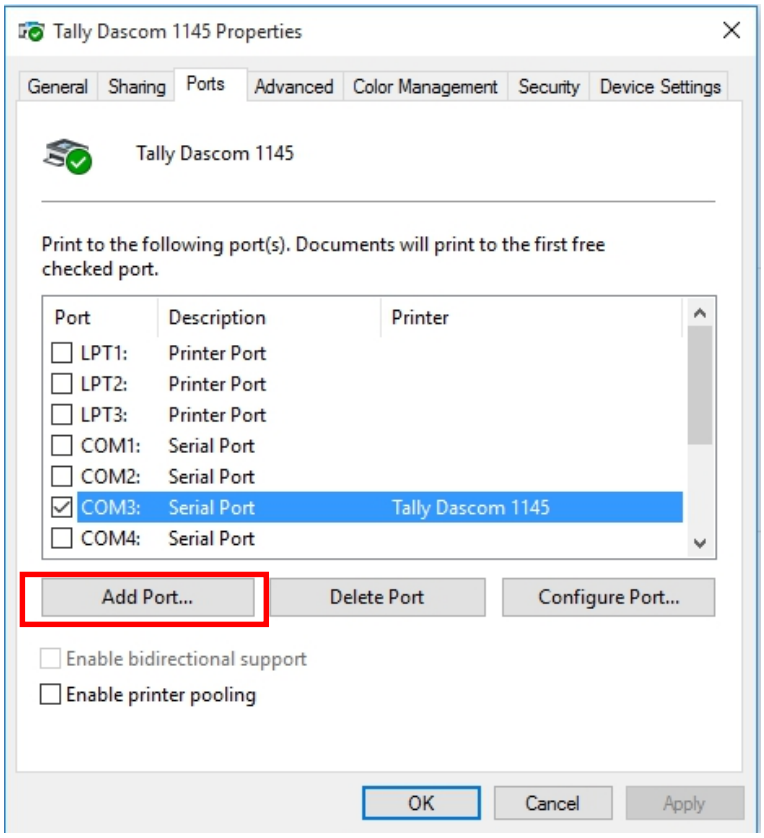

4、Click “Add Port…” in step 3. Below window will pop up.

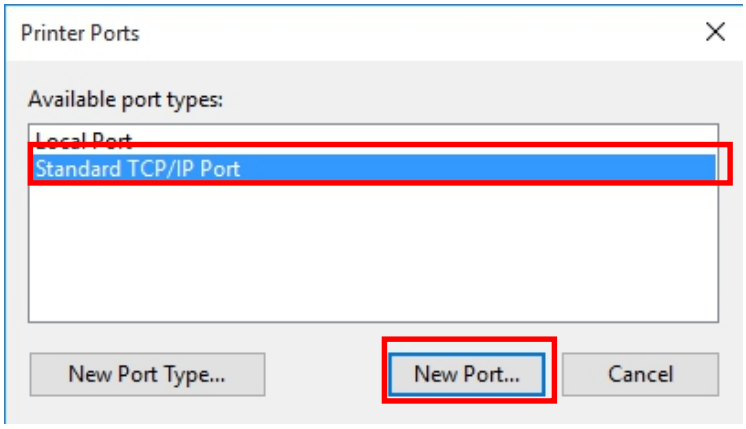

5、Select “Standard TCP/ Port”in step 4 and click “New Port...”. Below window will pop up.

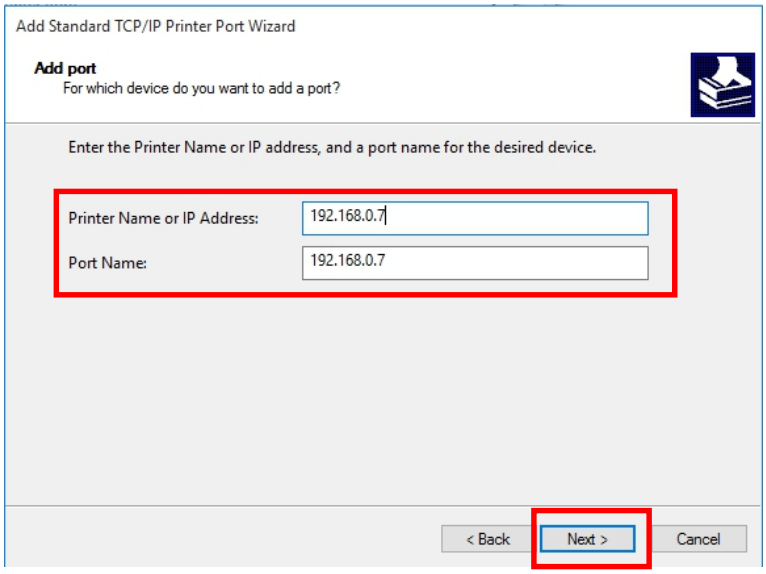

6、Type in the printer IP address in step 5 and click “Next”. The added port is shown as below.

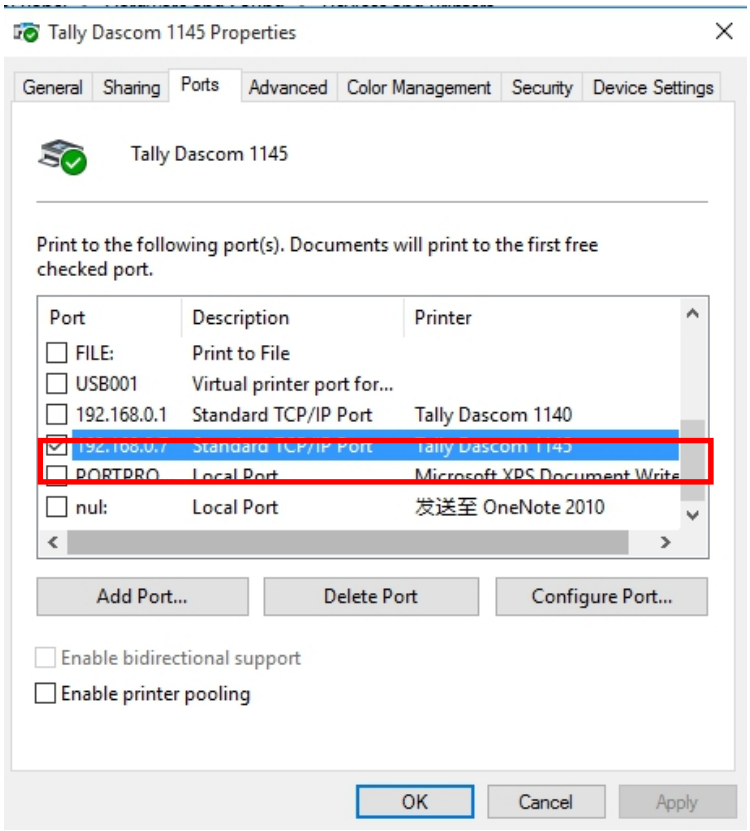

7、Click “Print Test Page” to print.

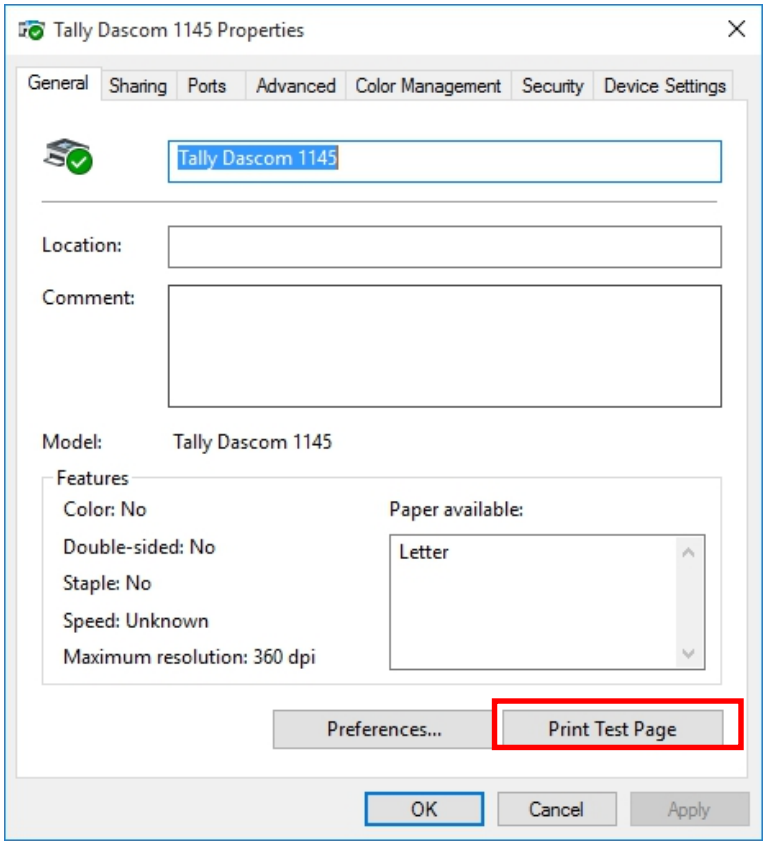

Note: When DHCP is ON, two network cables should be connected with the router. One is connected to PC while the other one is connected to the printer. Enter the router interface through IE browser to view the IP address assigned to the printer, then repeat the above steps 3~6 to add the printer IP port into the drive port. Send the data to print when completed.

E

Character sets & Code Pages

Character Sets

Standard character set 1

	0	1	2	3	4	5	6	7	8	9	A	B	C	D	E	F
0	NUL		SP	0	@	P	`	p	NUL			0	@	P	`	p
1		DC1	!	1	A	Q	a	q		DC1	!	1	A	Q	a	q
2		DC2	"	2	B	R	b	r		DC2	"	2	B	R	b	r
3		DC3	#	3	C	S	c	s		DC3	#	3	C	S	c	s
4		DC4	$	4	D	T	d	t		DC4	$	4	D	T	d	t
5			%	5	E	U	e	u			%	5	E	U	e	u
6			&	6	F	V	f	v			&	6	F	V	f	v
7	BEL		'	7	G	W	g	w	BEL		'	7	G	W	g	w
8	BS	CAN	(	8	H	X	h	x	BS	CAN	(	8	H	X	h	x
9	HT		)	9	I	Y	i	y	HT		)	9	I	Y	i	y
A	LF		*	:	J	Z	j	z	LF		*	:	J	Z	j	z
B	VT	ESC	+	;	K	[	k	{	VT	ESC	+	;	K	[	k	{
C	FF	FS	,	<	L	\	l	|	FF	FS	,	<	L	\	l	|
D	CR		-	=	M	]	m	}	CR		-	=	M	]	m	}
E	SO		.	>	N	^	n	~	SO		.	>	N	^	n	~
F	SI		/	?	O	_	o	|	SI		/	?	O	_	o	DEL

Standard character set 2

	0	1	2	3	4	5	6	7	8	9	A	B	C	D	E	F
0	NUL		SP	0	@	P	`	p	à	§		0	@	P	`	p
1		DC1	!	1	A	Q	a	q	è	ß	!	1	A	Q	a	q
2		DC2	"	2	B	R	b	r	ù	£	"	2	B	R	b	r
3		DC3	#	3	C	S	c	s	ò	æ	#	3	C	S	c	s
4		DC4	$	4	D	T	d	t	ì	Ø	$	4	D	T	d	t
5			%	5	E	U	e	u	°	ø	%	5	E	U	e	u
6			&	6	F	V	f	v	£	¨	&	6	F	V	f	v
7	BEL		'	7	G	W	g	w	¡	Å	'	7	G	W	g	w
8	BS	CAN	(	8	H	X	h	x	¿	Ö	(	8	H	X	h	x
9	HT		)	9	I	Y	i	y	Ñ	Ü	)	9	I	Y	i	y
A	LF		*	:	J	Z	j	z	ñ	ä	*	:	J	Z	j	z
B	VT	ESC	+	;	K	[	k	{	¤	ö	+	;	K	[	k	{
C	FF	FS	,	<	L	\	l	|	Ñ	ü	,	<	L	\	l	|
D	CR		-	=	M	]	m	}	Ä	É	-	=	M	]	m	}
E	SO		.	>	N	^	n	~	ä	é	.	>	N	^	n	~
F	SI		/	?	O	_	o	|	¢	¥	/	?	O	_	o	DEL

IBM character set 1

	0	1	2	3	4	5	6	7	8	9	A	B	C	D	E	F
0	NUL		SP	0	@	P	‘	p	NUL		á	⠿	└	╨	α	≡
1		DC1	!	1	A	Q	a	q		DC1	í	▒	┴	╤	β	±
2		DC2	"	2	B	R	b	r		DC2	ó	▓	┬	╥	Γ	≥
3		DC3	#	3	C	S	c	s		DC3	ú	│	├	╙	π	≤
4		DC4	$	4	D	T	d	t		DC4	ñ	┤	─	╘	Σ	⌠
5			%	5	E	U	e	u			Ñ	╡	┼	╒	σ	⌡
6			&	6	F	V	f	v			a	╢	╞	╓	µ	÷
7	BEL		'	7	G	W	g	w	BEL		º	╖	╟	╫	τ	≈
8	BS	CAN	(	8	H	X	h	x	BS	CAN	¿	╕	╚	╪	Φ	°
9	HT		)	9	I	Y	i	y	HT		⌐	╣	╔	┘	Θ	•
A	LF		*	:	J	Z	j	z	LF		¬	║	╩	┌	Ω	·
B	VT	ESC	+	;	K	[	k	{	VT	ESC	½	╗	╦	█	δ	√
C	FF	FS	,	<	L	\	l	|	FF	FS	¼	╝	╠	▄	∞	ⁿ
D	CR		-	=	M	]	m	}	CR		¡	╜	═	▌	Ø	²
E	SO		.	>	N	^	n	~	SO		«	╛	╬	▐	ε	■
F	SI		/	?	O	_	o	|	SI		»	┐	╧	▀	∩	SP

IBM character set 2

	0	1	2	3	4	5	6	7	8	9	A	B	C	D	E	F
0	NUL		SP	0	@	P	‘	p	Ç	É	á	⠿	└	╨	α	≡
1		DC1	!	1	A	Q	a	q	ü	æ	í	▒	┴	╤	β	±
2		DC2	"	2	B	R	b	r	é	Æ	ó	▓	┬	╥	Γ	≥
3	♥	DC3	#	3	C	S	c	s	â	ô	ú	│	├	╙	π	≤
4	♦	DC4	$	4	D	T	d	t	ä	ö	ñ	┤	─	╘	Σ	⌠
5	♣	§	%	5	E	U	e	u	à	ò	Ñ	╡	┼	╒	σ	⌡
6	♠		&	6	F	V	f	v	å	û	a	╢	╞	╓	µ	÷
7	BEL		'	7	G	W	g	w	ç	ù	º	╖	╟	╫	τ	≈
8	BS	CAN	(	8	H	X	h	x	ê	ÿ	¿	╕	╚	╪	Φ	°
9	HT		)	9	I	Y	i	y	ë	Ö	⌐	╣	╔	┘	Θ	•
A	LF		*	:	J	Z	j	z	è	Ü	¬	║	╩	┌	Ω	·
B	VT	ESC	+	;	K	[	k	{	ï	¢	½	╗	╦	█	δ	√
C	FF	FS	,	<	L	\	l	|	î	£	¼	╝	╠	▄	∞	ⁿ
D	CR		-	=	M	]	m	}	ì	¥	¡	╜	═	▌	Ø	²
E	SO		.	>	N	^	n	~	Ä	Pt	«	╛	╬	▐	ε	■
F	SI		/	?	O	_	o	|	Å	ƒ	»	┐	╧	▀	∩	SP

OCR-A character set 1

	0	1	2	3	4	5	6	7	8	9	A	B	C	D	E	F
0	NUL		SP	0	H	P	'	p	NUL							
1		DC1	Y	1	A	Q	a	q		DC1						
2		DC2	"	2	B	R	b	r		DC2						
3		DC3	♪	3	C	S	c	s		DC3						
4		DC4	#	4	D	T	d	t		DC4						
5			%	5	E	U	e	u								
6			&	6	F	V	f	v								
7	BEL		'	7	G	W	g	w	BEL							
8	BS	CAN	{	8	H	X	h	x	BS	CAN						
9	HT		}	9	I	Y	i	y	HT							
A	LF		*	:	J	Z	j	z	LF							
B	VT	ESC	+	;	K	[	k	(	VT	ESC						
C	FF	FS	¬	■	L	\	l	|	FF	FS						
D	CR		-	=	M	]	m	)	CR							
E	SO		.	■	N	^	n	~	SO							
F	SI		/	?	O	_	o	■	SI							

OCR-A character set 2

	0	1	2	3	4	5	6	7	8	9	A	B	C	D	E	F
0	Ø	►	SP	0	H	P	'	p								
1	☺	◄	Y	1	A	Q	a	q								
2	☻	↕	"	2	B	R	b	r								
3	♥	‼	♪	3	C	S	c	s								
4	♦	¶	#	4	D	T	d	t								
5	♣	§	%	5	E	U	e	u								
6	♠	_	&	6	F	V	f	v								
7	•	↨	'	7	G	W	g	w								
8	◘	↑	{	8	H	X	h	x								
9	○	↓	}	9	I	Y	i	y								
A	◙	→	*	:	J	Z	j	z								
B	♂	←	+	;	K	[	k	(								
C	♀	∟	¬	■	L	\	l	|								
D	♪	↔	-	=	M	]	m	)								
E	♫	▲	.	■	N	^	n	~								
F	☼	▼	/	?	O	_	o	■								

OCR-B character set 1

	0	1	2	3	4	5	6	7	8	9	A	B	C	D	E	F
0	NUL		SP	0	@	P	`	p	NUL							
1		DC1	!	1	A	Q	a	q		DC1						
2		DC2	"	2	B	R	b	r		DC2						
3		DC3	#	3	C	S	c	s		DC3						
4		DC4	$	4	D	T	d	t		DC4						
5			%	5	E	U	e	u								
6			&	6	F	V	f	v								
7	BEL		'	7	G	W	g	w	BEL							
8	BS	CAN	(	8	H	X	h	x	BS	CAN						
9	HT		)	9	I	Y	i	y	HT							
A	LF		*	:	J	Z	j	z	LF							
B	VT	ESC	+	;	K	[	k	{	VT	ESC						
C	FF	FS	,	<	L	\	l	|	FF	FS						
D	CR		-	=	M	]	m	}	CR							
E	SO		.	>	N	^	n	~	SO							
F	SI		/	?	O	_	o	■	SI							

OCR-B character set 2

	0	1	2	3	4	5	6	7	8	9	A	B	C	D	E	F
0	Ø	►	SP	0	@	P	`	p								
1	☺	◄	!	1	A	Q	a	q								
2	☻	↕	"	2	B	R	b	r								
3	♥	‼	#	3	C	S	c	s								
4	♦	¶	$	4	D	T	d	t								
5	♣	§	%	5	E	U	e	u								
6	♠	_	&	6	F	V	f	v								
7	•	↨	'	7	G	W	g	w								
8	◘	↑	(	8	H	X	h	x								
9	○	↓	)	9	I	Y	i	y								
A	◙	→	*	:	J	Z	j	z								
B	♂	←	+	;	K	[	k	{								
C	♀	∟	,	<	L	\	l	|								
D	♪	↔	-	=	M	]	m	}								
E	♫	▲	.	>	N	^	n	~								
F	☼	▼	/	?	O	_	o	■								

International Character Set Commands

Country	Basic Command
USA	<ESC>“R”CHR $ (0)
FRANCE	<ESC>“R”CHR $ (1)
GERMANY	<ESC>“R”CHR $ (2)
UK	<ESC>“R”CHR $ (3)
DENMARK 1	<ESC>“R”CHR $ (4)
SWEDEN	<ESC>“R”CHR $ (5)
ITALY	<ESC>“R”CHR $ (6)
SPAIN 1	<ESC>“R”CHR $ (7)
JAPAN	<ESC>“R”CHR $ (8)
NORWAY	<ESC>“R”CHR $ (9)
DENMARK 2	<ESC>“R”CHR $ (10)
SPAIN 2	<ESC>“R”CHR $ (11)
LATINAMERICA	<ESC>“R”CHR $ (12)
DENMARK/NORWAY	<ESC>“R”CHR $ (13)
CHINA	<ESC>“R”CHR $ (16)

International character sets

	Character Code (Hex)											
Character Set	23	24	40	5B	5C	5D	5E	60	7B	7C	7D	7E
0: U. S. A.	#	$	@	[	\	]	^	`	{	¦	}	~
1: FRANCE	#	$	à	°	ç	§	^	`	é	ù	è	¨
2: GERMANY	#	$	§	Ä	Ö	Ü	^	`	ä	ö	ü	β
3: U. K.	£	$	@	[	\	]	^	`	{	|	}	~
4: DENMARK 1	#	$	@	Æ	Ø	Å	^	`	æ	Ø	å	~
5: SWEDEN	#	¤	É	Ä	Ö	Å	Ü	é	ä	Ö	å	ü
6. ITALY	#	$	@	°	\	é	^	ù	à	ò	è	ì
7. SPAIN 1	Pt	$	@	¡	Ñ	¿	^	`	¨	ñ	}	~
8. JAPAN	#	$	@	[	¥	]	^	`	{	¦	}	~
9: NORWAY	#	¤	É	Æ	Ø	Å	Ü	é	æ	Ø	å	ü
10: DENMARK 2	#	$	É	Æ	Ø	Å	Ü	é	æ	Ø	å	ü
11: SPAIN 2	#	$	á	¡	Ñ	¿	é	`	í	ñ	ó	ú
12: LATIN AMERICA	#	$	á	¡	Ñ	¿	é	ü	í	ñ	ó	ú
13: DENMARK/NORWAY	#	$	@	[	\	]	^	`	{	|	}	~
16: CHINA	#	¥	@	[	\	]	^	`	{	|	}	~

Code Page Commands

Code Page	ESC R Parameter
CP 437	80
CP 737	93
CP 850	82
CP 851	88
CP 852	87
CP 857	8D
CP 858	9E
CP 860	84
CP 861	94
CP 863	85
CP 864	8C
CP 864 Extended	95
CP 865	86
CP 866 Cyrillic	8E
CP 866 Bulgaria	9D
CP 1250	70
CP 1251	71
CP 1252	72
CP 1253	73
CP 1254	74
8859-1	25
8859-1 (SAP)	2B
8859-2	26
8859-5	2A
8859-7	2D
8859-9	2E
8859-15	2F
BRASCII	6D
Abicomp	6E
Roman8	4D
Coax/Twinax	4F
New-437	81

New-Dig 850	83
Old-Code 860	98
Flarro 863	99
865 Hebrew	9A
CP 1257	77
866 Ukraine	8F
866 Kazakhstan	90
Kamenicky	91
Mazovia	92
CP 775	A6
CRO-ASCII	3C
Arabic Farsi	96
Arabic Urdu	97
Greek DEC	46
Greek ELOT 928	6C
UK_ASCII	41
US_ASCII	42
Swedish	48
German	4B
Portuguese	4C
French	52
Italian	59
Norwegian	60
Spanish	5A
SiemensTurk	9B
DECTurkish	9C

Code Page Tables

CP 437

	*	0	1	2	3	4	5	6	7	8	9	A	B	C	D	E	F
0	*				0	@	P	'	p	Ç	É	á	░	└	╨	α	≡
1	*			!	1	A	Q	a	q	ü	æ	í	▒	┴	╤	β	±
2	*			"	2	B	R	b	r	é	Æ	ó	▓	┬	╥	Γ	≥
3	*			#	3	C	S	c	s	â	ô	ú	│	├	╙	π	≤
4	*			$	4	D	T	d	t	ä	ö	ñ	┤	─	╘	Σ	⌠
5	*			%	5	E	U	e	u	à	ò	Ñ	╡	┼	╒	σ	⌡
6	*			&	6	F	V	f	v	å	û	ª	╢	╞	╓	µ	÷
7	*			'	7	G	W	g	w	ç	ù	º	╖	╟	╫	τ	≈
8	*			(	8	H	X	h	x	ê	ÿ	¿	╕	╚	╪	Φ	°
9	*			)	9	I	Y	i	y	ë	Ö	⌐	╣	╔	┘	Θ	∙
A	*			*	:	J	Z	j	z	è	Ü	¬	║	╩	┌	Ω	·
B	*			+	;	K	[	k	{	ï	¢	½	╗	╦	█	δ	√
C	*			,	<	L	\	l	|	î	£	¼	╝	╠	▄	∞	ⁿ
D	*			-	=	M	]	m	}	ì	¥	¡	╜	═	▌	φ	²
E	*			.	>	N	^	n	~	Ä	₧	«	╛	╬	▐	ε	■
F	*			/	?	O	_	o		Å	ƒ	»	┐	╧	▀	∩	

CP 737

	*	0	1	2	3	4	5	6	7	8	9	A	B	C	D	E	F
0	*				0	@	P	'	p	Α	Ρ	ι	░	└	╨	ω	Ω
1	*			!	1	A	Q	a	q	Β	Σ	κ	▒	┴	╤	ά	±
2	*			"	2	B	R	b	r	Γ	Τ	ή	▓	┬	╥	έ	≥
3	*			#	3	C	S	c	s	Δ	Υ	μ	│	├	╙	ή	≤
4	*			$	4	D	T	d	t	Ε	Φ	ν	┤	─	╘	ϊ	ΪΫ
5	*			%	5	E	U	e	u	Ζ	Χ	ξ	╡	┼	╒	ί	Ϋ
6	*			&	6	F	V	f	v	Η	Ψ	ο	╢	╞	╓	ό	÷
7	*			'	7	G	W	g	w	Θ	Ω	π	╖	╟	╫	ύ	≈
8	*			(	8	H	X	h	x	Ι	α	ρ	╕	╚	╪	ϋ	°
9	*			)	9	I	Y	i	y	Κ	β	σ	╣	╔	┘	ώ	£
A	*			*	:	J	Z	j	z	Λ	γ	ς	║	╩	┌	Ά	·
B	*			+	;	K	[	k	{	Μ	δ	τ	╗	╦	█	Έ	√
C	*			,	<	L	\	l	|	Ν	ε	υ	╝	╠	▄	Ή	ⁿ
D	*			-	=	M	]	m	}	Ξ	ζ	φ	╜	═	▌	Ί	²
E	*			.	>	N	^	n	~	Ο	η	χ	╛	╬	▐	Ό	■
F	*			/	?	O	_	o		Π	θ	ψ	┐	╧	▀	Ύ	

CP 850

	*	0	1	2	3	4	5	6	7	8	9	A	B	C	D	E	F
0	*				0	@	P	'	p	Ç	É	á	▒	└	ð	Ó	-
1	*			!	1	A	Q	a	q	ü	æ	í	▒	┴	Ð	ß	±
2	*			"	2	B	R	b	r	é	Æ	ó	▒	┬	Ê	Ô	‗
3	*			#	3	C	S	c	s	â	ô	ú	│	├	Ë	Ò	¾
4	*			$	4	D	T	d	t	ä	ö	ñ	┤	─	È	õ	¶
5	*			%	5	E	U	e	u	à	ò	Ñ	Á	┼	ı	Õ	§
6	*			&	6	F	V	f	v	å	û	ª	Â	ã	Í	µ	÷
7	*			'	7	G	W	g	w	ç	ù	º	À	Ã	Î	þ	¸
8	*			(	8	H	X	h	x	ê	ÿ	¿	©	╚	Ï	Þ	°
9	*			)	9	I	Y	i	y	ë	Ö	®	╣	╔	┘	Ú	¨
A	*			*	:	J	Z	j	z	è	Ü	¬	║	╩	┌	Û	·
B	*			+	;	K	[	k	{	ï	ø	½	╗	╦	█	Ù	¹
C	*			,	<	L	\	l	|	î	£	¼	╝	╠	▄	ý	³
D	*			-	=	M	]	m	}	ì	Ø	¡	¢	═	¦	Ý	²
E	*			.	>	N	^	n	~	Ä	×	«	¥	╬	Ì	¯	■
F	*			/	?	O	_	o		Å	ƒ	»	┐	¤	▀	´	

CP 851

	*	0	1	2	3	4	5	6	7	8	9	A	B	C	D	E	F
0	*				0	@	P	'	p	Ç	Ι	ΐ	▒	└	Τ	ζ	-
1	*			!	1	A	Q	a	q	ü		Ι	▒	┴	Υ	η	±
2	*			"	2	B	R	b	r	é	Ο	ό	▒	┬	Φ	θ	υ
3	*			#	3	C	S	c	s	â	ô	ύ	│	├	Χ	ι	φ
4	*			$	4	D	T	d	t	ä	ö	Α	┤	─	Ψ	κ	χ
5	*			%	5	E	U	e	u	ά	Υ	Β	Κ	┼	Ω	ϐ	§
6	*			&	6	F	V	f	v	Ά	û	Γ	Λ	Π	α	μ	ψ
7	*			'	7	G	W	g	w	ç	ù	Δ	Μ	Ρ	β	ν	¸
8	*			(	8	H	X	h	x	ê	Ώ	Ε	Ν	╚	γ	ξ	°
9	*			)	9	I	Y	i	y	ë	Ϋ	Ζ	╣	╔	┘	ο	¨
A	*			*	:	J	Z	j	z	è	Ϋ	Η	║	╩	┌	π	ω
B	*			+	;	K	[	k	{	ϊ	ά	½	╗	╦	█	ρ	ϋ
C	*			,	<	L	\	l	|	î	£	Θ	╝	╠	▄	σ	ΰ
D	*			-	=	M	]	m	}	Ε	έ	Ι	Ξ	═	▌	ς	ώ
E	*			.	>	N	^	n	~	Ά	ή	«	Ο	╬	Ό	τ	■
F	*			/	?	O	_	o		Η	ί	»	┐	Σ	▀		

CP 852

	*	0	1	2	3	4	5	6	7	8	9	A	B	C	D	E	F
0	*				0	@	P	'	p	Ç	É	á	░	└	đ	Ó	-
1	*			!	1	A	Q	a	q	ü	Ĺ	í	▒	┴	Đ	ß	˝
2	*			"	2	B	R	b	r	é	ĺ	ó	▓	┬	Ď	Ô	˛
3	*			#	3	C	S	c	s	â	ô	ú	│	├	Ë	Ń	ˇ
4	*			$	4	D	T	d	t	ä	ö	Ą	┤	─	ď	ń	˘
5	*			%	5	E	U	e	u	ů	Ľ	ą	Á	┼	Ň	ň	§
6	*			&	6	F	V	f	v	ć	ľ	Ž	Â	Ă	Ĺ	Š	÷
7	*			'	7	G	W	g	w	ç	Ś	ž	Ě	ă	Ĺ	š	¸
8	*			(	8	H	X	h	x	ł	ś	Ę	Ş	╚	ě	Ŕ	¸
9	*			)	9	I	Y	i	y	ë	Ö	ę	╣	╔	┘	Ú	¨
A	*			*	:	J	Z	j	z	Ő	Ü	¬	║	╩	┌	ŕ	·
B	*			+	;	K	[	k	{	ő	Ť	ź	╗	╦	█	Ü	ü
C	*			,	<	L	\	l	¦	î	ť	Č	╝	╠	▄	ý	Ř
D	*			-	=	M	]	m	}	Ź	Ł	ş	Ż	═	▌	Ý	ř
E	*			.	>	N	^	n	~	Ä	×	«	ż	╬	Ů	ţ	▓
F	*			/	?	O	_	o		Ć	č	»	┐	¤	▀	´	

CP 857

	*	0	1	2	3	4	5	6	7	8	9	A	B	C	D	E	F
0	*				0	@	P	'	p	Ç	É	á	░	└	º	Ó	-
1	*			!	1	A	Q	a	q	ü	æ	í	▒	┴	ª	ß	±
2	*			"	2	B	R	b	r	é	Æ	ó	▓	┬	Ê	Ô	¾
3	*			#	3	C	S	c	s	â	ô	ú	│	├	Ë	Ò	¶
4	*			$	4	D	T	d	t	ä	ö	ñ	┤	─	È	õ	§
5	*			%	5	E	U	e	u	à	ò	Ñ	Á	┼		Õ	÷
6	*			&	6	F	V	f	v	å	û	Ğ	Â	ã	Í	µ	¸
7	*			'	7	G	W	g	w	ç	ù	ğ	À	Ã	Î		¸
8	*			(	8	H	X	h	x	ê	İ	¿	©	╚	Ï	×	¨
9	*			)	9	I	Y	i	y	ë	Ö	®	╣	╔	┘	Ú	·
A	*			*	:	J	Z	j	z	è	Ü	¬	║	╩	┌	Û	¹
B	*			+	;	K	[	k	{	ï	ø	½	╗	╦	█	Ù	³
C	*			,	<	L	\	l	|	î	£	¼	╝	╠	▄	ì	²
D	*			-	=	M	]	m	}	ı	Ø	¡	¢	═	¦	ÿ	▓
E	*			.	>	N	^	n	~	Ä	Ş	«	¥	╬	Ì	¸	
F	*			/	?	O	_	o		Å	ş	»	┐	¤	▀	´	

CP 858

	*	0	1	2	3	4	5	6	7	8	9	A	B	C	D	E	F
0	*				0	@	P	'	p	Ç	É	á	░	└	ð	Ó	-
1	*			!	1	A	Q	a	q	ü	æ	í	▒	┴	Ð	ß	±
2	*			"	2	B	R	b	r	é	Æ	ó	▓	┬	Ê	Ô	‗
3	*			#	3	C	S	c	s	â	ô	ú	│	├	Ë	Ò	¾
4	*			$	4	D	T	d	t	ä	ö	ñ	┤	─	È	õ	¶
5	*			%	5	E	U	e	u	à	ò	Ñ	Á	┼	€	Õ	§
6	*			&	6	F	V	f	v	å	û	ª	Â	╞	Í	µ	÷
7	*			'	7	G	W	g	w	ç	ù	º	Ã	╟	Î	þ	¸
8	*			(	8	H	X	h	x	ê	ÿ	¿	©	╚	Ï	Þ	°
9	*			)	9	I	Y	i	y	ë	Ö	®	╣	╔	┘	Ú	¨
A	*			*	:	J	Z	j	z	è	Ü	¬	║	╩	┌	Û	·
B	*			+	;	K	[	k	{	ï	ø	½	╗	╦	█	Ù	¹
C	*			,	<	L	\	l	|	î	£	¼	╝	╠	▄	ý	³
D	*			-	=	M	]	m	}	ì	Ø	¡	¢	═	¦	Ý	²
E	*			.	>	N	^	n	~	Ä	×	«	¥	╬	Ì	¯	■
F	*			/	?	O	_	o		Å	ƒ	»	┐	¤	▀	´	

CP 860

	*	0	1	2	3	4	5	6	7	8	9	A	B	C	D	E	F
0	*				0	@	P	'	p	Ç	É	á	░	└	╨	α	≡
1	*			!	1	A	Q	a	q	ü	À	í	▒	┴	╤	β	±
2	*			"	2	B	R	b	r	é	È	ó	▓	┬	╥	Γ	≥
3	*			#	3	C	S	c	s	â	ô	ú	│	├	╙	π	≤
4	*			$	4	D	T	d	t	ã	õ	ñ	┤	─	╘	Σ	⌠
5	*			%	5	E	U	e	u	à	ò	Ñ	╡	┼	╒	σ	⌡
6	*			&	6	F	V	f	v	Á	Ú	ª	╢	╞	╓	µ	÷
7	*			'	7	G	W	g	w	ç	ù	º	╖	╟	╫	τ	≈
8	*			(	8	H	X	h	x	ê	Ì	¿	╕	╚	╪	Φ	°
9	*			)	9	I	Y	i	y	Ê	Õ	Ò	╣	╔	┘	Θ	∙
A	*			*	:	J	Z	j	z	è	Ü	¬	║	╩	┌	Ω	·
B	*			+	;	K	[	k	{	í	¢	½	╗	╦	█	δ	√
C	*			,	<	L	\	l	|	Ô	£	¼	╝	╠	▄	∞	ⁿ
D	*			-	=	M	]	m	}	ì	Ù	¡	╜	═	▌	ø	²
E	*			.	>	N	^	n	~	Ã	₧	«	╛	╬	▐	∈	■
F	*			/	?	O	_	o		Â	Ó	»	┐	╧	▀	∩	

CP 861

	*	0	1	2	3	4	5	6	7	8	9	A	B	C	D	E	F
0	*				0	@	P	'	p	Ç	É	á	░	└	╨	α	≡
1	*			!	1	A	Q	a	q	ü	æ	í	▒	┴	╤	β	±
2	*			"	2	B	R	b	r	é	Æ	ó	▓	┬	╥	Γ	≥
3	*			#	3	C	S	c	s	â	ô	ú	│	├	╙	π	≤
4	*			$	4	D	T	d	t	ä	ö	Á	┤	─	╘	Σ	⌠
5	*			%	5	E	U	e	u	à	þ	Í	╡	┼	╒	σ	⌡
6	*			&	6	F	V	f	v	å	û	Ó	╢	╞	╓	µ	÷
7	*			'	7	G	W	g	w	ç	Ý	Ú	╖	╟	╫	τ	≈
8	*			(	8	H	X	h	x	ê	ý	¿	╕	╚	╪	Φ	°
9	*			)	9	I	Y	i	y	ë	Ö	⌐	╣	╔	┘	Θ	∙
A	*			*	:	J	Z	j	z	è	Ü	¬	║	╩	┌	Ω	·
B	*			+	;	K	[	k	{	Ð	ø	½	╗	╦	█	δ	√
C	*			,	<	L	\	l	|	ð	£	¼	╝	╠	▄	∞	ⁿ
D	*			-	=	M	]	m	}	Þ	Ø	¡	╜	═	▌	ø	²
E	*			.	>	N	^	n	~	Ä	₧	«	╛	╬	▐	∈	■
F	*			/	?	O	_	o		Å	ƒ	»	┐	╧	▀	∩	

CP 863

	*	0	1	2	3	4	5	6	7	8	9	A	B	C	D	E	F
0	*				0	@	P	'	p	Ç	É	¦	░	└	╨	α	≡
1	*			!	1	A	Q	a	q	ü	È	'	▒	┴	╤	β	±
2	*			"	2	B	R	b	r	é	Ê	ó	▓	┬	╥	Γ	≥
3	*			#	3	C	S	c	s	â	ô	ú	│	├	╙	π	≤
4	*			$	4	D	T	d	t	Â	Ë	¨	┤	─	╘	Σ	⌠
5	*			%	5	E	U	e	u	à	Ï	´	╡	┼	╒	σ	⌡
6	*			&	6	F	V	f	v	¶	û	³	╢	╞	╓	µ	÷
7	*			'	7	G	W	g	w	ç	ù	¯	╖	╟	╫	τ	≈
8	*			(	8	H	X	h	x	ê	¤	Î	╕	╚	╪	Φ	°
9	*			)	9	I	Y	i	y	ë	Ô	⌐	╣	╔	┘	Θ	∙
A	*			*	:	J	Z	j	z	è	Ü	¬	║	╩	┌	Ω	·
B	*			+	;	K	[	k	{	ï	¢	½	╗	╦	█	δ	√
C	*			,	<	L	\	l	|	î	£	¼	╝	╠	▄	∞	ⁿ
D	*			-	=	M	]	m	}	_	Ù	¾	╜	═	▌	ø	²
E	*			.	>	N	^	n	~	À	Û	«	╛	╬	▐	∈	■
F	*			/	?	O	_	o		§	ƒ	»	┐	╧	▀	∩	

CP 864

	*	0	1	2	3	4	5	6	7	8	9	A	B	C	D	E	F
0	*				0	@	P	'	p	°	ß		·	¢	ذ	ـ	ـّ
1	*			!	1	A	Q	a	q	·	∞	-	١	ء	ر	ف	ـّ
2	*			"	2	B	R	b	r	·	φ	ـا	٢	آ	ز	ق	ن
3	*			#	3	C	S	c	s	√	±	£	٣	أ	س	ك	ه
4	*			$	4	D	T	d	t	▒	½	¤	٤	ؤ	ش	ل	ه
5	*			%	5	E	U	e	u	─	¼	ـا	٥	ع	ص	م	ى
6	*			&	6	F	V	f	v	┼	≈		٦	ئ	ض	ن	ى
7	*			'	7	G	W	g	w	┼	«		٧	ا	ط	ه	ف
8	*			(	8	H	X	h	x	╪	»	ـا	٨	ب	ظ	و	ق
9	*			)	9	I	Y	i	y	╪	لا	ب	٩	ة	ع	ى	لا
A	*			*	:	J	Z	j	z	╪	لا	ت	ف	ت	غ	ي	لا
B	*			+	;	K	[	k	{	╪		ث	؛	ث	¦	ض	ل
C	*			,	<	L	\	l	¦	╪		،	س	ج	¬	ه	ك
D	*			-	=	M	]	m	}	┬	لا	ج	ش	ح	÷	غ	ى
E	*			.	>	N	^	n	~	╞	لا	ح	ص	خ	×	غ	■
F	*			/	?	O	_	o		╫	ـا	خ	؟	د	ع	م	

Extend 864

	*	0	1	2	3	4	5	6	7	8	9	A	B	C	D	E	F
0	*				0	@	P	'	p	°	″		·	س	ذ	ـ	ـّ
1	*			!	1	A	Q	a	q	ـّ	ـَ	-	١	ء	ر	ف	ـّ
2	*			"	2	B	R	b	r	ص	ـِ	ـا	٢	آ	ز	ق	ن
3	*			#	3	C	S	c	s	ض	ـُ	£	٣	أ	س	ك	ه
4	*			$	4	D	T	d	t	▒	ـّ	¤	٤	ؤ	ش	ل	ه
5	*			%	5	E	U	e	u	ـَ	ـً	ـا	٥	ع	ص	م	ى
6	*			&	6	F	V	f	v	ـَ	ـٌ		٦	ئ	ض	ن	ى
7	*			'	7	G	W	g	w	ـً	«		٧	ا	ط	ه	ف
8	*			(	8	H	X	h	x	ـً	»	ـا	٨	ب	ظ	و	ق
9	*			)	9	I	Y	i	y	ـً	لا	ب	٩	ة	ع	ى	لا
A	*			*	:	J	Z	j	z	ـً	لا	ت	ف	ت	غ	ي	لا
B	*			+	;	K	[	k	{	ـُ	لا	ث	؛	ث	¦	ض	ل
C	*			,	<	L	\	l	¦	ـُ	لا	،	س	ج	ش	ه	ك
D	*			-	=	M	]	m	}	ـُ	لا	ج	ش	ح	÷	غ	ى
E	*			.	>	N	^	n	~	ـً	لا	ح	ص	خ	×	غ	■
F	*			/	?	O	_	o		″	ـا	خ	؟	د	ع	م	

CP 865

	*	0	1	2	3	4	5	6	7	8	9	A	B	C	D	E	F
0	*				0	@	P	'	p	Ç	É	á	░	└	╨	α	≡
1	*			!	1	A	Q	a	q	ü	æ	í	▒	┴	╤	β	±
2	*			"	2	B	R	b	r	é	Æ	ó	▓	┬	╥	Γ	≥
3	*			#	3	C	S	c	s	â	ô	ú	│	├	╙	π	≤
4	*			$	4	D	T	d	t	ä	ö	ñ	┤	─	╘	Σ	⌠
5	*			%	5	E	U	e	u	à	ò	Ñ	╡	┼	╒	σ	⌡
6	*			&	6	F	V	f	v	å	û	ª	╢	╞	╓	µ	÷
7	*			'	7	G	W	g	w	ç	ù	º	╖	╟	╫	τ	≈
8	*			(	8	H	X	h	x	ê	ÿ	¿	╕	╚	╪	Φ	°
9	*			)	9	I	Y	i	y	ë	Ö	⌐	╣	╔	┘	Θ	∙
A	*			*	:	J	Z	j	z	è	Ü	¬	║	╩	┌	Ω	·
B	*			+	;	K	[	k	{	ï	ø	½	╗	╦	█	δ	√
C	*			,	<	L	\	l	|	î	£	¼	╝	╠	▄	∞	ⁿ
D	*			-	=	M	]	m	}	ì	Ø	¡	╜	═	▌	φ	²
E	*			.	>	N	^	n	~	Ä	Pt	«	╛	╬	│	ε	■
F	*			/	?	O	_	o		Å	ƒ	¤	┐	╧	▐	∩	

CP 866

	*	0	1	2	3	4	5	6	7	8	9	A	B	C	D	E	F
0	*				0	@	P	'	p	А	Р	а	░	└	╨	р	Ё
1	*			!	1	A	Q	a	q	Б	С	б	▒	┴	╤	с	ё
2	*			"	2	B	R	b	r	В	Т	в	▓	┬	╥	т	Є
3	*			#	3	C	S	c	s	Г	У	г	│	├	╙	у	є
4	*			$	4	D	T	d	t	Д	Ф	д	┤	─	╘	ф	Ї
5	*			%	5	E	U	e	u	Е	Х	е	╡	┼	╒	х	ї
6	*			&	6	F	V	f	v	Ж	Ц	ж	╢	╞	╓	ц	Ў
7	*			'	7	G	W	g	w	З	Ч	з	╖	╟	╫	ч	ў
8	*			(	8	H	X	h	x	И	Ш	и	╕	╚	╪	ш	°
9	*			)	9	I	Y	i	y	Й	Щ	й	╣	╔	┘	щ	∙
A	*			*	:	J	Z	j	z	К	Ъ	к	║	╩	┌	ъ	·
B	*			+	;	K	[	k	{	Л	Ы	л	╗	╦	█	ы	√
C	*			,	<	L	\	l	|	М	Ь	м	╝	╠	▄	ь	№
D	*			-	=	M	]	m	}	Н	Э	н	╜	═	▌	э	¤
E	*			.	>	N	^	n	~	О	Ю	о	╛	╬	│	ю	■
F	*			/	?	O	_	o		П	Я	п	┐	╧	▐	я	

Bulgaria 866

*	0	1	2	3	4	5	6	7	8	9	A	B	C	D	E	F
0	*			0	@	P	'	p	А	Р	а	р	└	░	α	≡
1	*		!	1	A	Q	a	q	Б	С	б	с	┴	▒	β	±
2	*		"	2	B	R	b	r	В	Т	в	т	┬	▓	Γ	≥
3	*		#	3	C	S	c	s	Г	У	г	у	├	│	π	≤
4	*		$	4	D	T	d	t	Д	Ф	д	ф	─	┤	Σ	⌠
5	*		%	5	E	U	e	u	Е	Х	е	х	┼	№	σ	⌡
6	*		&	6	F	V	f	v	Ж	Ц	ж	ц	╞	§	µ	÷
7	*		'	7	G	W	g	w	З	Ч	з	ч	╟	╗	τ	≈
8	*		(	8	H	X	h	x	И	Ш	и	ш	╚	╝	Φ	°
9	*		)	9	I	Y	i	y	Й	Щ	й	щ	╔	┘	Θ	•
A	*		*	:	J	Z	j	z	К	Ъ	к	ъ	╩	┌	Ω	·
B	*		+	;	K	[	k	{	Л	Ы	л	ы	╦	█	δ	√
C	*		,	<	L	\	l	¦	М	Ь	м	ь	╠	▄	∞	ⁿ
D	*		-	=	M	]	m	}	Н	Э	н	э	═	▌	φ	²
E	*		.	>	N	^	n	~	О	Ю	о	ю	╬	▐	ε	■
F	*		/	?	O	_	o		П	Я	п	я	╧	▀	∩	

CP 1250

*	0	1	2	3	4	5	6	7	8	9	A	B	C	D	E	F
0	*			0	@	P	'	p	€			°	Ŕ	Đ	ŕ	đ
1	*		!	1	A	Q	a	q		‘	ˇ	±	Á	Ń	á	ń
2	*		"	2	B	R	b	r	‚	’	˘	˛	Â	Ň	â	ň
3	*		#	3	C	S	c	s		“	Ł	˝	Ă	Ó	ă	ó
4	*		$	4	D	T	d	t	„	”	¤	´	Ä	Ô	ä	ô
5	*		%	5	E	U	e	u	…	•	Ą	µ	Ĺ	Ő	ĺ	ő
6	*		&	6	F	V	f	v	†	–	¦	¶	Ć	Ö	ć	ö
7	*		'	7	G	W	g	w	‡	—	§	·	Ç	×	ç	÷
8	*		(	8	H	X	h	x			¨	¸	Č	Ř	č	ř
9	*		)	9	I	Y	i	y	‰	™	©	ą	É	Ů	é	ů
A	*		*	:	J	Z	j	z	Š	š	Ş	ş	Ę	Ú	ę	ú
B	*		+	;	K	[	k	{	‹	›	«	»	Ë	Ű	ë	ű
C	*		,	<	L	\	l	¦	Ś	ś	¬	¼	Ě	Ü	ě	ü
D	*		-	=	M	]	m	}	Ť	ť	-	½	Í	Ý	í	ý
E	*		.	>	N	^	n	~	Ž	ž	®	¾	Î	Ţ	î	ţ
F	*		/	?	O	_	o		Ź	ź	Ż	¿	Ď	ß	ď	˙

CP 1251

	*	0	1	2	3	4	5	6	7	8	9	A	B	C	D	E	F
0	*				0	@	P	'	p	Ђ	Ґ		°	А	Р	а	р
1	*			!	1	A	Q	a	q	Ѓ	'	Ў	±	Б	С	б	с
2	*			"	2	B	R	b	r	‚	'	ў	І	В	Т	в	т
3	*			#	3	C	S	c	s	ѓ	"	Ј	і	Г	У	г	у
4	*			$	4	D	T	d	t	„	"	¤	ґ	Д	Ф	д	ф
5	*			%	5	E	U	e	u	…	•	Ґ	µ	Е	Х	е	х
6	*			&	6	F	V	f	v	†	–	¦	¶	Ж	Ц	ж	ц
7	*			'	7	G	W	g	w	‡	—	§	·	З	Ч	з	ч
8	*			(	8	H	X	h	x	€	—	Ё	ё	И	Ш	и	ш
9	*			)	9	I	Y	i	y	‰	™	©	№	Й	Щ	й	щ
A	*			*	:	J	Z	j	z	Љ	љ	Є	є	К	Ъ	к	ъ
B	*			+	;	K	[	k	{	‹	›	«	»	Л	Ы	л	ы
C	*			,	<	L	\	l	|	Њ	њ	¬	ј	М	Ь	м	ь
D	*			-	=	M	]	m	}	Ќ	ќ	-	Ѕ	Н	Э	н	э
E	*			.	>	N	^	n	~	Ћ	ћ	®	ѕ	О	Ю	о	ю
F	*			/	?	O	_	o		Џ	џ	Ї	ї	П	Я	п	я

CP 1252

	*	0	1	2	3	4	5	6	7	8	9	A	B	C	D	E	F
0	*				0	@	P	'	p	€			°	À	Ð	à	ð
1	*			!	1	A	Q	a	q		‘	¡	±	Á	Ñ	á	ñ
2	*			"	2	B	R	b	r	‚	’	¢	²	Â	Ò	â	ò
3	*			#	3	C	S	c	s	ƒ	“	£	³	Ã	Ó	ã	ó
4	*			$	4	D	T	d	t	„	”	¤	´	Ä	Ô	ä	ô
5	*			%	5	E	U	e	u	…	•	¥	µ	Å	Õ	å	õ
6	*			&	6	F	V	f	v	†	–	¦	¶	Æ	Ö	æ	ö
7	*			'	7	G	W	g	w	‡	—	§	·	Ç	×	ç	÷
8	*			(	8	H	X	h	x	ˆ	˜	¨	¸	È	Ø	è	ø
9	*			)	9	I	Y	i	y	‰	™	©	¹	É	Ù	é	ù
A	*			*	:	J	Z	j	z	Š	š	ª	º	Ê	Ú	ê	ú
B	*			+	;	K	[	k	{	‹	›	«	»	Ë	Û	ë	û
C	*			,	<	L	\	l	|	Œ	œ	¬	¼	Ì	Ü	ì	ü
D	*			-	=	M	]	m	}			-	½	Í	Ý	í	ý
E	*			.	>	N	^	n	~			®	¾	Î	Þ	î	þ
F	*			/	?	O	_	o			Ÿ	¯	¿	Ï	ß	ï	ÿ

CP 1253

*	0	1	2	3	4	5	6	7	8	9	A	B	C	D	E	F
0				0	@	P	'	p	€			°	Ί	Π	ΰ	π
1			!	1	A	Q	a	q		‘	‒	±	A	P	α	ρ
2			"	2	B	R	b	r	‚	’	΄	²	B		β	ς
3			#	3	C	S	c	s	ƒ	"	£	³	Γ	Σ	γ	σ
4			$	4	D	T	d	t	„	"	¤	΄	Δ	T	δ	τ
5			%	5	E	U	e	u	…	•	¥	μ	E	Y	ε	υ
6			&	6	F	V	f	v	†	–	¦	¶	Z	Φ	ζ	φ
7			'	7	G	W	g	w	‡	—	§	·	H	X	η	χ
8			(	8	H	X	h	x			¨	Έ	Θ	Ψ	θ	ψ
9			)	9	I	Y	i	y	‰	™	©	Ή	I	Ω	ι	ω
A			*	:	J	Z	j	z			ª	Ί	K	Ϊ	κ	ΐ
B			+	;	K	[	k	{	‹	›	«	»	Λ	Ύ	λ	ΰ
C			,	<	L	\	l	|			¬	Ό	M	ά	μ	ό
D			-	=	M	]	m	}			-	½	N	έ	ν	ύ
E			.	>	N	^	n	~			®	Ύ	Ξ	ή	ξ	ώ
F			/	?	O	_	o				―	Ω	O	ί	ο	

CP 1254

*	0	1	2	3	4	5	6	7	8	9	A	B	C	D	E	F
0				0	@	P	'	p	€			°	À	Ğ	à	ğ
1			!	1	A	Q	a	q		‘	¡	±	Á	Ñ	á	ñ
2			"	2	B	R	b	r	‚	’	¢	²	Â	Ò	â	ò
3			#	3	C	S	c	s	ƒ	"	£	³	Ã	Ó	ã	ó
4			$	4	D	T	d	t	„	"	¤	´	Ä	Ô	ä	ô
5			%	5	E	U	e	u	…	•	¥	μ	Å	Õ	å	õ
6			&	6	F	V	f	v	†	–	¦	¶	Æ	Ö	æ	ö
7			'	7	G	W	g	w	‡	—	§	·	Ç	×	ç	÷
8			(	8	H	X	h	x	ˆ	˜	¨	¸	È	Ø	è	ø
9			)	9	I	Y	i	y	‰	™	©	¹	É	Ù	é	ù
A			*	:	J	Z	j	z	Š	š	ª	º	Ê	Ú	ê	ú
B			+	;	K	[	k	{	‹	›	«	»	Ë	Û	ë	û
C			,	<	L	\	l	|	Œ	œ	¬	¼	Ì	Ü	ì	ü
D			-	=	M	]	m	}			-	½	Í	Ý	í	ý
E			.	>	N	^	n	~			®	¾	Î	Ş	î	ş
F			/	?	O	_	o			Ÿ	―	¿	Ï	ß	ï	ÿ

8859-1

*	0	1	2	3	4	5	6	7	8	9	A	B	C	D	E	F
0	*			0	@	P	'	p	Ç	É		°	À	Ð	à	ð
1	*		!	1	A	Q	a	q	ü	æ	¡	±	Á	Ñ	á	ñ
2	*		"	2	B	R	b	r	é	Æ	¢	²	Â	Ò	â	ò
3	*		#	3	C	S	c	s	â	ô	£	³	Ã	Ó	ã	ó
4	*		$	4	D	T	d	t	ä	ö	¤	´	Ä	Ô	ä	ô
5	*		%	5	E	U	e	u	à	ò	¥	µ	Å	Õ	å	õ
6	*		&	6	F	V	f	v	å	û	¦	¶	Æ	Ö	æ	ö
7	*		'	7	G	W	g	w	ç	ù	§	·	Ç	×	ç	÷
8	*		(	8	H	X	h	x	ê	ÿ	¨	¸	È	Ø	è	ø
9	*		)	9	I	Y	i	y	ë	Ö	©	¹	É	Ù	é	ù
A	*		*	:	J	Z	j	z	è	Ü	ª	º	Ê	Ú	ê	ú
B	*		+	;	K	[	k	{	ï	¢	«	»	Ë	Û	ë	û
C	*		,	<	L	\	l	|	î	£	¬	¼	Ì	Ü	ì	ü
D	*		-	=	M	]	m	}	ì	¥	-	½	Í	Ý	í	ý
E	*		.	>	N	^	n	~	Ä	Pt	®	¾	Î	Þ	î	þ
F	*		/	?	O	_	o		Å	ƒ	¯	¿	Ï	ß	ï	ÿ

8859-1 (SAP)

*	0	1	2	3	4	5	6	7	8	9	A	B	C	D	E	F
0	*			0	@	P	'	p	Ç	┼		°	À	Ð	à	ð
1	*		!	1	A	Q	a	q	ü	╪	¡	±	Á	Ñ	á	ñ
2	*		"	2	B	R	b	r	é	┼	¢	²	Â	Ò	â	ò
3	*		#	3	C	S	c	s	â	├	£	³	Ã	Ó	ã	ó
4	*		$	4	D	T	d	t	ä	┌	¤	´	Ä	Ô	ä	ô
5	*		%	5	E	U	e	u	à	┬	¥	µ	Å	Õ	å	õ
6	*		&	6	F	V	f	v	å	┴	¦	¶	Æ	Ö	æ	ö
7	*		'	7	G	W	g	w	ç	┤	§	·	Ç	×	ç	÷
8	*		(	8	H	X	h	x	ê	┤	¨	¸	È	Ø	è	ø
9	*		)	9	I	Y	i	y	ë	╪	©	¹	É	Ù	é	ù
A	*		*	:	J	Z	j	z	è	╪	ª	º	Ê	Ú	ê	ú
B	*		+	;	K	[	k	{	ï	┴	«	»	Ë	Û	ë	û
C	*		,	<	L	\	l	|	î		¬	¼	Ì	Ü	ì	ü
D	*		-	=	M	]	m	}	ì		-	½	Í	Ý	í	ý
E	*		.	>	N	^	n	~	Ä		®	¾	Î	Þ	î	þ
F	*		/	?	O	_	o		Å		¯	¿	Ï	ß	ï	ÿ

8859-2

	*	0	1	2	3	4	5	6	7	8	9	A	B	C	D	E	F
0	*				0	@	P	'	p	Ç	É		°	Ŕ	Đ	ŕ	đ
1	*			!	1	A	Q	a	q	ü	æ	Ą	ą	Á	Ń	á	ń
2	*			"	2	B	R	b	r	é	Æ	˘	˛	Â	Ň	â	ň
3	*			#	3	C	S	c	s	â	ô	Ł	ł	Ă	Ó	ă	ó
4	*			$	4	D	T	d	t	ä	ö	¤	´	Ä	Ô	ä	ô
5	*			%	5	E	U	e	u	à	ò	Ľ	ľ	Ĺ	Ő	í	ő
6	*			&	6	F	V	f	v	ů	û	Ś	ś	Ć	Ö	ć	ö
7	*			'	7	G	W	g	w	ç	ù	§	ˇ	Ç	×	ç	÷
8	*			(	8	H	X	h	x	ê	ÿ	¨	¸	Č	Ř	č	ř
9	*			)	9	I	Y	i	y	ë	Ö	Š	š	É	Ů	é	ů
A	*			*	:	J	Z	j	z	è	Ü	Ş	ş	Ę	Ú	ę	ú
B	*			+	;	K	[	k	{	ï	¢	Ť	ť	Ě	Ű	ě	ű
C	*			,	<	L	\	l	|	î	£	Ź	ź	Ë	Ü	ë	ü
D	*			-	=	M	]	m	}	ì	¥	˝	˝	Í	Ý	í	ý
E	*			.	>	N	^	n	~	Ä	Pt	Ž	ž	Î	Ţ	î	ţ
F	*			/	?	O	_	o		Å	ƒ	Ż	ż	Ď	ß	ď	˙

8859-5

	*	0	1	2	3	4	5	6	7	8	9	A	B	C	D	E	F
0	*				0	@	P	'	p	Ç	É		A	P	a	p	№
1	*			!	1	A	Q	a	q	ü	æ	Ё	Б	C	б	c	ё
2	*			"	2	B	R	b	r	é	Æ	Ђ	B	T	в	T	ђ
3	*			#	3	C	S	c	s	â	ô	Ґ	Г	У	г	y	ґ
4	*			$	4	D	T	d	t	ä	ö	Є	Д	Ф	д	ф	є
5	*			%	5	E	U	e	u	à	ò	S	E	X	e	x	s
6	*			&	6	F	V	f	v	å	û	I	Ж	Ц	ж	ц	i
7	*			'	7	G	W	g	w	ç	ù	Ї	З	Ч	з	ч	ї
8	*			(	8	H	X	h	x	ê	ÿ	J	И	Ш	и	ш	j
9	*			)	9	I	Y	i	y	ë	Ö	Љ	Й	Щ	й	щ	љ
A	*			*	:	J	Z	j	z	è	Ü	Ня	K	Ъ	к	ъ	ня
B	*			+	;	K	[	k	{	ï	¢	Ћ	Л	Ы	л	ы	ћ
C	*			,	<	L	\	l	|	î	£	Ќ	M	Ь	м	ь	ќ
D	*			-	=	M	]	m	}	ì	¥	-	H	Э	н	э	§
E	*			.	>	N	^	n	~	Ä	Pt	Ў	O	Ю	о	ю	ў
F	*			/	?	O	_	o		Å	ƒ	Ц	П	Я	п	я	ц

8859-7

*	0	1	2	3	4	5	6	7	8	9	A	B	C	D	E	F
0	*			0	@	P	'	p	Ç	É		°	Ϊ	Π	Ü	π
1	*		!	1	A	Q	a	q	ü	æ	‘	±	A	P	α	ρ
2	*		"	2	B	R	b	r	é	Æ	’	²	B		β	ς
3	*		#	3	C	S	c	s	â	ô	£	³	Γ	Σ	γ	σ
4	*		$	4	D	T	d	t	ä	ö		’	Δ	Τ	δ	τ
5	*		%	5	E	U	e	u	à	ò		»	E	Y	ε	υ
6	*		&	6	F	V	f	v	å	û	¦	Ά	Z	Φ	ζ	φ
7	*		’	7	G	W	g	w	ç	ù	§	·	H	X	η	χ
8	*		(	8	H	X	h	x	ê	ÿ	¨	Έ	Θ	Ψ	θ	ψ
9	*		)	9	I	Y	i	y	ë	Ö	©	Ή	I	Ω	ι	ω
A	*		*	:	J	Z	j	z	è	Ü		Ί	K	Ϊ	κ	ϊ
B	*		+	;	K	[	k	{	ï	¢	«	»	Λ	Ϋ	λ	ϋ
C	*		,	<	L	\	l	|	î	£	¬	Ό	M	ά	μ	ό
D	*		-	=	M	]	m	}	ì	¥	-	½	N	έ	ν	ύ
E	*		.	>	N	^	n	~	Ä	Pt		Ύ	Ξ	ή	ξ	ώ
F	*		/	?	O	_	o		Å	ƒ	―	Ω	O	ί	ο	

8859-9

*	0	1	2	3	4	5	6.	7	8	9	A	B	C	D	E	F
0	*			0	@	P	'	p	Ç	É		°	À	Ğ	à	ğ
1	*		!	1	A	Q	a	q	ü	æ	¡	±	Á	Ñ	á	ñ
2	*		"	2	B	R	b	r	é	Æ	¢	²	Â	Ò	â	ò
3	*		#	3	C	S	c	s	â	ô	£	³	Ã	Ó	ã	ó
4	*		$	4	D	T	d	t	ä	ö	¤	’	Ä	Ô	ä	ô
5	*		%	5	E	U	e	u	à	ò	¥	µ	Å	Õ	å	õ
6	*		&	6	F	V	f	v	å	û	¦	¶	Æ	Ö	æ	ö
7	*		’	7	G	W	g	w	ç	ù	§	·	Ç	×	ç	÷
8	*		(	8	H	X	h	x	ê	ÿ	¨	¸	È	Ø	è	ø
9	*		)	9	I	Y	i	y	ë	Ö	©	¹	É	Ù	é	ù
A	*		*	:	J	Z	j	z	è	Ü	ª	º	Ê	Ú	ê	ú
B	*		+	;	K	[	k	{	ï	¢	«	»	Ë	Û	ë	û
C	*		,	<	L	\	l	|	î	£	¬	¼	Ì	Ü	ì	ü
D	*		-	=	M	]	m	}	ì	¥	-	½	Í	İ	í	ı
E	*		.	>	N	^	n	~	Ä	Pt	®	¾	Î	Ş	î	ş
F	*		/	?	O	_	o		Å	ƒ	¯	¿	Ï	ß	ï	ÿ

8859-15

*	0	1	2	3	4	5	6	7	8	9	A	B	C	D	E	F
0 *				0	@	P	'	p	Ç	É		°	À	Ð	à	ð
1 *			!	1	A	Q	a	q	ü	æ	¡	±	Á	Ñ	á	ñ
2 *			"	2	B	R	b	r	é	Æ	¢	²	Â	Ò	â	ò
3 *			#	3	C	S	c	s	â	ô	£	³	Ã	Ó	ã	ó
4 *			$	4	D	T	d	t	ä	ö	€	Ž	Ä	Ô	ä	ô
5 *			%	5	E	U	e	u	à	ò	¥	µ	Å	Õ	å	õ
6 *			&	6	F	V	f	v	å	û	Š	¶	Æ	Ö	æ	ö
7 *			'	7	G	W	g	w	ç	ù	§	·	Ç	×	ç	÷
8 *			(	8	H	X	h	x	ê	ÿ	š	ž	È	Ø	è	ø
9 *			)	9	I	Y	i	y	ë	Ö	©	¹	É	Ù	é	ù
A *			*	:	J	Z	j	z	è	Ü	ª	º	Ê	Ú	ê	ú
B *			+	;	K	[	k	{	ï	¢	«	»	Ë	Û	ë	û
C *			,	<	L	\	l	|	î	£	¬	Œ	Ì	Ü	ì	ü
D *			-	=	M	]	m	}	ì	¥	-	œ	Í	Ý	í	ý
E *			.	>	N	^	n	~	Ä	Pt	®	Ÿ	Î	Þ	î	þ
F *			/	?	O	_	o		Å	ƒ	¯	¿	Ï	ß	ï	ÿ

BRASCII

*	0	1	2	3	4	5	6	7	8	9	A	B	C	D	E	F
0 *				0	@	P	'	p				°	À	Ð	à	ð
1 *			!	1	A	Q	a	q			¡	±	Á	Ñ	á	ñ
2 *			"	2	B	R	b	r			¢	²	Â	Ò	â	ò
3 *			#	3	C	S	c	s			£	³	Ã	Ó	ã	ó
4 *			$	4	D	T	d	t			¤	'	Ä	Ô	ä	ô
5 *			%	5	E	U	e	u			¥	µ	Å	Õ	å	õ
6 *			&	6	F	V	f	v			¦	¶	Æ	Ö	æ	ö
7 *			'	7	G	W	g	w			§	·	Ç	Œ	ç	œ
8 *			(	8	H	X	h	x			¨	¸	È	Ø	è	ø
9 *			)	9	I	Y	i	y			©	¹	É	Ù	é	ù
A *			*	:	J	Z	j	z			ª	º	Ê	Ú	ê	ú
B *			+	;	K	[	k	{			«	»	Ë	Û	ë	û
C *			,	<	L	\	l	|			¬	¼	Ì	Ü	ì	ü
D *			-	=	M	]	m	}			-	½	Í	Ý	í	ý
E *			.	>	N	^	n	~			®	¾	Î	Þ	î	þ
F *			/	?	O	_	o				¯	¿	Ï	ß	ï	ÿ

Abicomp

*	0	1	2	3	4	5	6	7	8	9	A	B	C	D	E	F
0 *				0	@	P	'	p				Ò	¡	ò		
1 *			!	1	A	Q	a	q			À	Ó	à	ó		
2 *			"	2	B	R	b	r			Á	Ô	á	ô		
3 *			#	3	C	S	c	s			Â	Õ	â	õ		
4 *			$	4	D	T	d	t			Ã	Ö	ã	ö		
5 *			%	5	E	U	e	u			Ä	Œ	ä	œ		
6 *			&	6	F	V	f	v			Ç	Ù	ç	ù		
7 *			'	7	G	W	g	w			È	Ú	è	ú		
8 *			(	8	H	X	h	x			É	Û	é	û		
9 *			)	9	I	Y	i	y			Ê	Ü	ê	ü		
A *			*	:	J	Z	j	z			Ë	Ÿ	ë	ÿ		
B *			+	;	K	[	k	{			Ì	¨	ì	ß		
C *			,	<	L	\	l	|			Í	£	í	ª		
D *			-	=	M	]	m	}			Î	·	î	º		
E *			.	>	N	^	n	~			Ï	§	ï	¿		
F *			/	?	O	_	o				Ñ	°	ñ	±		

Roman 8

*	0	1	2	3	4	5	6	7	8	9	A	B	C	D	E	F
0 *				0	@	P	'	p				¯	â	Å	Á	þ
1 *			!	1	A	Q	a	q			À	Ý	ê	î	Ã	Þ
2 *			"	2	B	R	b	r			Â	ý	ô	Ø	ã	·
3 *			#	3	C	S	c	s			È	°	û	Æ	Ð	µ
4 *			$	4	D	T	d	t			Ê	Ç	á	å	ð	¶
5 *			%	5	E	U	e	u			Ë	ç	é	í	Í	¾
6 *			&	6	F	V	f	v			Î	Ñ	ó	ø	Ì	—
7 *			'	7	G	W	g	w			Ï	ñ	ú	æ	Ó	¼
8 *			(	8	H	X	h	x			'	¡	à	Ä	Ò	½
9 *			)	9	I	Y	i	y			'	¿	è	ì	Õ	ª
A *			*	:	J	Z	j	z			^	¤	ò	Ö	õ	º
B *			+	;	K	[	k	{			¨	£	ù	Ü	Š	«
C *			,	<	L	\	l	|			~	¥	ä	É	š	■
D *			-	=	M	]	m	}			Ù	§	ë	ï	Ú	»
E *			.	>	N	^	n	~			Û	ƒ	ö	ß	Ÿ	±
F *			/	?	O	_	o				£	¢	ü	Ô	ÿ	

Coax/Twinax

	*	0	1	2	3	4	5	6	7	8	9	A	B	C	D	E	F
0	*				0	@	P	'	p	א	ן	á	▒	└	╨	א	ן
1	*			!	1	A	Q	a	q	ב	ט	í	═	┴	╤	ב	ט
2	*			"	2	B	R	b	r	ג	ע	ó	╬	┬	╥	ג	ע
3	*			#	3	C	S	c	s	ד	ף	ú	╧	├	╙	ד	ף
4	*			$	4	D	T	d	t	ה	פ	ñ	╨	─	╘	ה	פ
5	*			%	5	E	U	e	u	ו	ץ	Ñ	╤	┼	╒	ו	ץ
6	*			&	6	F	V	f	v	ז	צ	ª	╥	╞	╓	ז	צ
7	*			'	7	G	W	g	w	ח	ק	º	╙	╟	╫	ח	ק
8	*			(	8	H	X	h	x	ט	ר	¿	╘	╚	╪	ט	ר
9	*			)	9	I	Y	i	y	י	ש	⌐	╒	╔	┘	י	ש
A	*			*	:	J	Z	j	z	ך	ת	¬	╓	╩	┌	ך	ת
B	*			+	;	K	[	k	{	כ	¢	½	╫	╦	█	כ	√
C	*			,	<	L	\	l	¦	ל	£	¼	╪	╠	▄	ל	ⁿ
D	*			-	=	M	]	m	}	ם	¥	¡	╘	═	▌	ם	²
E	*			.	>	N	^	n	~	מ	₧	«	╛	╬	▐	מ	■
F	*			/	?	O	_	o		ן	ƒ	»	┐	╧	▀	ן	

New-437

	*	0	1	2	3	4	5	6	7	8	9	A	B	C	D	E	F
0	*				0	@	P	'	p	א	ן	á	▒	└	╨	α	≡
1	*			!	1	A	Q	a	q	ב	ט	í	═	┴	╤	β	±
2	*			"	2	B	R	b	r	ג	ע	ó	╬	┬	╥	Γ	≥
3	*			#	3	C	S	c	s	ד	ף	ú	╧	├	╙	π	≤
4	*			$	4	D	T	d	t	ה	ק	ñ	╨	─	╘	Σ	⌠
5	*			%	5	E	U	e	u	ו	ץ	Ñ	╤	┼	╒	σ	⌡
6	*			&	6	F	V	f	v	ז	צ	ª	╥	╞	╓	µ	÷
7	*			'	7	G	W	g	w	ח	ק	º	╙	╟	╫	τ	≈
8	*			(	8	H	X	h	x	ט	ר	¿	╘	╚	╪	Φ	°
9	*			)	9	I	Y	i	y	י	ש	⌐	╒	╔	┘	Θ	∙
A	*			*	:	J	Z	j	z	ך	ת	¬	╓	╩	┌	Ω	·
B	*			+	;	K	[	k	{	כ	¢	½	╫	╦	█	δ	√
C	*			,	<	L	\	l	|	ל	£	¼	╪	╠	▄	∞	ⁿ
D	*			-	=	M	]	m	}	ם	¥	¡	╘	═	▌	ø	²
E	*			.	>	N	^	n	~	מ	₧	«	╛	╬	▐	∈	■
F	*			/	?	O	_	o		ן	ƒ	»	┐	╧	▀	∩	

New-Dig 850

	*	0	1	2	3	4	5	6	7	8	9	A	B	C	D	E	F
0	*				0	@	P	'	p	א	נ	á	░	└	ð	א	נ
1	*			!	1	A	Q	a	q	ב	ס	í	▒	┴	Ð	ב	ס
2	*			"	2	B	R	b	r	ג	ע	ó	▓	┬	Ê	ג	ע
3	*			#	3	C	S	c	s	ד	ף	ú	│	├	Ë	ד	ף
4	*			$	4	D	T	d	t	ה	פ	ñ	┤	─	È	ה	פ
5	*			%	5	E	U	e	u	ו	ץ	Ñ	Á	┼	ı	ו	ץ
6	*			&	6	F	V	f	v	ז	צ	ª	Â	ã	Í	ז	צ
7	*			'	7	G	W	g	w	ח	ק	º	À	Ã	Î	ח	ק
8	*			(	8	H	X	h	x	ט	ר	¿	©	╚	Ï	ט	ר
9	*			)	9	I	Y	i	y	י	ש	®	╣	╔	┘	י	ש
A	*			*	:	J	Z	j	z	ך	ת	¬	║	╩	┌	ך	ת
B	*			+	;	K	[	k	{	כ	ø	½	╗	╦	█	כ	¹
C	*			,	<	L	\	l	|	ל	£	¼	╝	╠	▄	ל	³
D	*			-	=	M	]	m	}	ם	Ø	¡	¢	═	¦	ם	²
E	*			.	>	N	^	n	~	מ	×	«	¥	╬	Ì	מ	▀
F	*			/	?	O	_	o		ן	ƒ	»	┐	¤	▀	ן	

Old-Code 860

	*	0	1	2	3	4	5	6	7	8	9	A	B	C	D	E	F
0	*				0	@	P	א	נ	א	נ	á	░	└	╨	α	≡
1	*			!	1	A	Q	ב	ס	ב	À	í	▒	┴	╤	β	±
2	*			"	2	B	R	ג	ע	ג	È	ó	▓	┬	╥	Γ	≥
3	*			#	3	C	S	ד	ף	ד	ף	ú	│	├	╙	π	≤
4	*			$	4	D	T	ה	פ	ã	õ	ñ	┤	─	╘	Σ	⌠
5	*			%	5	E	U	ו	ץ	ו	ץ	Ñ	╡	┼	╒	σ	⌡
6	*			&	6	F	V	ז	צ	Á	Ú	ª	╢	╞	╓	Í	'
7	*			'	7	G	W	ח	ק	ח	ק	º	╖	╟	╫	τ	≈
8	*			(	8	H	X	ט	ר	ט	Ì	¿	╕	╚	╪	Φ	°
9	*			)	9	I	Y	י	ש	Ê	Õ	Ò	╣	╔	┘	Θ	·
A	*			*	:	J	Z	ך	ת	ך	ת	¬	║	╩	┌	Ω	·
B	*			+	;	K	[	כ	{	Í	¢	½	╗	╦	█	δ	√
C	*			,	<	L	\	ל	|	Ô	£	¼	╝	╠	▄	∞	ⁿ
D	*			-	=	M	]	ם	}	í	Ù	¡	╜	═	▌	ø	²
E	*			.	>	N	^	מ	~	Ã	Pt	«	╛	╬	▐	∈	▀
F	*			/	?	O	_	ן		Â	Ó	»	┐	╧	▀	∩	

Flarro 863

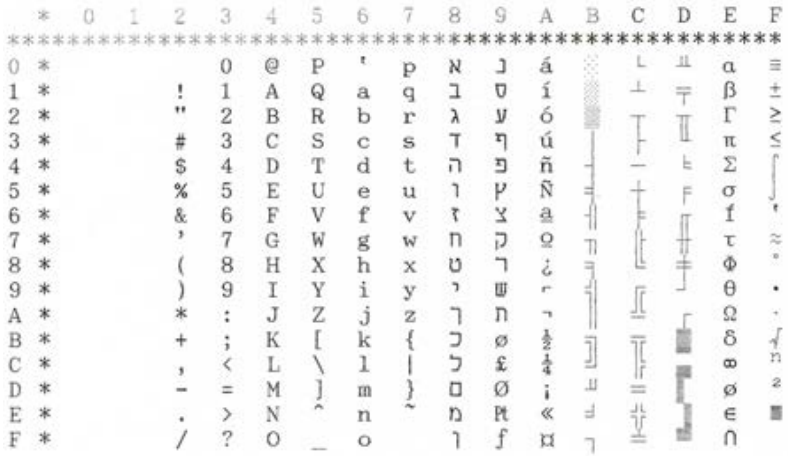

CP 1257

	*	0	1	2	3	4	5	6	7	8	9	A	B	C	D	E	F
0	*				0	@	P	'	p	€			°	Ą	Š	ą	š
1	*			!	1	A	Q	a	q		'		±	]	Ń	]	ń
2	*			"	2	B	R	b	r	,	'	¢	²	Ā	Ņ	ā	ņ
3	*			#	3	C	S	c	s		"	£	³	Ć	Ō	ć	ō
4	*			$	4	D	T	d	t	„	"	¤	'	Ä	Ō	ä	ō
5	*			%	5	E	U	e	u	-	•		µ	Å	Ō	å	ō
6	*			&	6	F	V	f	v	†	–	¦	¶	Ę	Ö	ę	ö
7	*			'	7	G	W	g	w	‡	—	§	·	Ē	×	ē	÷
8	*			(	8	H	X	h	x		—	Ø	ø	Č	Ų	č	ą
9	*			)	9	I	Y	i	y	‰	™	©	¹	É	Ł	é	ł
A	*			*	:	J	Z	j	z			Ŗ	ŗ	Ź	Ś	ź	ś
B	*			+	;	K	[	k	{	‹	›	«	»	Ė	Ū	ė	ū
C	*			,	<	L	\	l	|			¬	¼	Ģ	Ü	ģ	ü
D	*			-	=	M	]	m	}			-	½	Ķ	Ž	ķ	ž
E	*			.	>	N	^	n	~			®	¾	Ī	Ž	ī	ž
F	*			/	?	O	_	o				Æ	æ	Ļ	ß	]	˙

Ukraine 866

	*	0	1	2	3	4	5	6	7	8	9	A	B	C	D	E	F
0	*				0	@	P	'	p	А	Р	а	░	└	╨	р	Ё
1	*			!	1	A	Q	a	q	Б	С	б	▒	┴	╤	с	ё
2	*			"	2	B	R	b	r	В	Т	в	▓	┬	╥	т	Ґ
3	*			#	3	C	S	c	s	Г	У	г	│	├	╙	у	ґ
4	*			$	4	D	T	d	t	Д	Ф	д	┤	─	╘	ф	Є
5	*			%	5	E	U	e	u	Е	Х	е	╡	┼	╒	х	є
6	*			&	6	F	V	f	v	Ж	Ц	ж	╢	╞	╓	ц	І
7	*			'	7	G	W	g	w	З	Ч	з	╖	╟	╫	ч	і
8	*			(	8	H	X	h	x	И	Ш	и	╕	╚	╪	ш	Ї
9	*			)	9	I	Y	i	y	Й	Щ	й	╣	╔	┘	щ	ї
A	*			*	:	J	Z	j	z	К	Ъ	к	║	╩	┌	ъ	·
B	*			+	;	K	[	k	{	Л	Ы	л	╗	╦	█	ы	√
C	*			,	<	L	\	l	|	М	Ь	м	╝	╠	▄	ь	№
D	*			-	=	M	]	m	}	Н	Э	н	╜	═	▌	э	¤
E	*			.	>	N	^	n	~	О	Ю	о	╛	╬	▐	ю	■
F	*			/	?	O	_	o		П	Я	п	┐	╧	▀	я	

Kazakhstan 866

	*	0	1	2	3	4	5	6	7	8	9	A	B	C	D	E	F
0	*				0	@	P	'	p	А	Р	а	░	└	╨	р	Ә
1	*			!	1	A	Q	a	q	Б	С	б	▒	┴	╤	с	Ғ
2	*			"	2	B	R	b	r	В	Т	в	▓	┬	╥	т	Қ
3	*			#	3	C	S	c	s	Г	У	г	│	├	╙	у	Ң
4	*			$	4	D	T	d	t	Д	Ф	д	┤	─	╘	ф	Ө
5	*			%	5	E	U	e	u	Е	Х	е	╡	┼	╒	х	Ү
6	*			&	6	F	V	f	v	Ж	Ц	ж	╢	╞	╓	ц	Ұ
7	*			'	7	G	W	g	w	З	Ч	з	╖	╟	╫	ч	Һ
8	*			(	8	H	X	h	x	И	Ш	и	╕	╚	╪	ш	Ә
9	*			)	9	I	Y	i	y	Й	Щ	й	╣	╔	┘	щ	Ғ
A	*			*	:	J	Z	j	z	К	Ъ	к	║	╩	┌	ъ	Қ
B	*			+	;	K	[	k	{	Л	Ы	л	╗	╦	█	ы	Ң
C	*			,	<	L	\	l	¦	М	Ь	м	╝	╠	▄	ь	Ө
D	*			-	=	M	]	m	}	Н	Э	н	╜	═	▌	э	Ұ
E	*			.	>	N	^	n	~	О	Ю	о	╛	╬	▐	ю	Ү
F	*			/	?	O	_	o		П	Я	п	┐	╧	▀	я	

Kamenicky

	*	0	1	2	3	4	5	6	7	8	9	A	B	C	D	E	F
0	*				0	@	P	'	p	Č	É	á	░	└	╨	α	≡
1	*			!	1	A	Q	a	q	ü	Ž	í	▒	┴	╤	β	±
2	*			"	2	B	R	b	r	é	Ž	ó	▓	┬	╥	Γ	≥
3	*			#	3	C	S	c	s	ď	ô	ú	│	├	╙	π	≤
4	*			$	4	D	T	d	t	ä	ö	ň	┤	─	╘	Σ	⌠
5	*			%	5	E	U	e	u	Ď	Ô	Ň	╡	┼	╒	σ	⌡
6	*			&	6	F	V	f	v	Ť	ů	Ô	╢	╞	╓	µ	÷
7	*			'	7	G	W	g	w	č	Ú	Ö	╖	╟	╫	τ	≈
8	*			(	8	H	X	h	x	ě	ý	š	╕	╚	╪	Φ	°
9	*			)	9	I	Y	i	y	Ě	Ö	ř	╣	╔	┘	Θ	∙
A	*			*	:	J	Z	j	z	Ĺ	Ü	ř	║	╩	┌	Ω	·
B	*			+	;	K	[	k	{	ť	š	Ř	╗	╦	█	δ	√
C	*			,	<	L	\	l	¦	ť	ť	ť	╝	╠	▄	∞	ⁿ
D	*			-	=	M	]	m	}	ľ	Ý	§	╜	═	▌	ø	²
E	*			.	>	N	^	n	~	Ä	Ř	«	╛	╬	▐	ε	■
F	*			/	?	O	_	o		Á	ť	»	┐	╧	▀	∩	

Mazovia

	*	0	1	2	3	4	5	6	7	8	9	A	B	C	D	E	F
0	*				0	@	P	'	p	Ç	Ę	Ź	▒	└	╨	α	≡
1	*			!	1	A	Q	a	q	ü	ę	Ż	▒	┴	╥	ß	±
2	*			"	2	B	R	b	r	é	ł	ó	▒	┬	╙	Γ	≥
3	*			#	3	C	S	c	s	ā	ō	Ō	│	├	╘	π	≤
4	*			$	4	D	T	d	t	ä	ö	ń	┤	─	╒	Σ	⌠
5	*			%	5	E	U	e	u	à	Ć	Ń	╡	┼	╓	σ	⌡
6	*			&	6	F	V	f	v	ą	ū	ź	╢	╞	╫	µ	÷
7	*			'	7	G	W	g	w	ç	ù	ż	╖	╟	╪	τ	≈
8	*			(	8	H	X	h	x	ê	Ś	¿	╕	╚	┘	Φ	°
9	*			)	9	I	Y	i	y	ë	Ö	⌐	╣	╔	┌	Θ	∙
A	*			*	:	J	Z	j	z	è	Ü	¬	║	╩	█	Ω	·
B	*			+	;	K	[	k	{	ï	¢	½	╗	╦	▄	δ	√
C	*			,	<	L	\	l	|	î	Ł	¼	╝	╠	▌	∞	ⁿ
D	*			-	=	M	]	m	}	ć	¥	¡	╜	═	│	ø	²
E	*			.	>	N	^	n	~	Ä	ś	«	╛	╬	▐	ε	■
F	*			/	?	O	_	o		Ą	ƒ	»	┐	╧	▀	∩	

Baltic 775

	*	0	1	2	3	4	5	6	7	8	9	A	B	C	D	E	F
0	*				0	@	P	'	p	Č	É	Ā	▒	└	ą	Ó	-
1	*			!	1	A	Q	a	q	ü	æ	Ī	▒	┴	č	ß	±
2	*			"	2	B	R	b	r	é	Æ	ó	▒	┬	ę	Ō	‗
3	*			#	3	C	S	c	s	ā	ō	Ž	│	├	ė	Ń	¼
4	*			$	4	D	T	d	t	ä	ö	ż	┤	─	į	õ	¶
5	*			%	5	E	U	e	u	ģ	Ģ	ź	Ą	┼	š	Õ	§
6	*			&	6	F	V	f	v	ā	¢	"	Č	Ų	ų	µ	÷
7	*			'	7	G	W	g	w	ć	Ś	¦	Ę	Ū	ū	ń	‚
8	*			(	8	H	X	h	x	ł	ś	©	Ė	╢	ž	Ķ	°
9	*			)	9	I	Y	i	y	ē	Ö	®	╣	┘	┐	ķ	∙
A	*			*	:	J	Z	j	z	Ŗ	Ü	¬	║	╔	┌	Ļ	·
B	*			+	;	K	[	k	{	ŗ	ø	½	╗	╩	▄	]	¹
C	*			,	<	L	\	l	|	ī	£	¼	╝	╠	▌	ņ	³
D	*			-	=	M	]	m	}	Ż	Ø	Ł	Ī	═	│	Ē	²
E	*			.	>	N	^	n	~	Ä	×	«	Š	╬	▐	Ņ	■
F	*			/	?	O	_	o	Δ		Å	¤	»	┐	Ž	▀	'

CRO-ASCII

	*	0	1	2	3	4	5	6	7	8	9	A	B	C	D	E	F
0	*				0	Ž	P	ž	p	Ç	É	á	░	└	╨	α	≡
1	*			!	1	A	Q	a	q	ü	æ	í	▒	┴	╤	β	±
2	*			"	2	B	R	b	r	é	Æ	ó	▓	┬	╥	Γ	≥
3	*			#	3	C	S	c	s	â	ô	ú	│	├	╙	π	≤
4	*			$	4	D	T	d	t	ä	ö	ñ	┤	─	╘	Σ	⌠
5	*			%	5	E	U	e	u	à	ò	Ñ	╡	┼	╒	σ	⌡
6	*			&	6	F	V	f	v	å	û	ª	╢	╞	╓	µ	÷
7	*			'	7	G	W	g	w	ç	ù	º	╖	╟	╫	τ	≈
8	*			(	8	H	X	h	x	ê	ÿ	¿	╕	╚	╪	Φ	°
9	*			)	9	I	Y	i	y	ë	Ö	⌐	╣	╔	┘	Θ	∙
A	*			*	:	J	Z	j	z	è	Ü	¬	║	╩	┌	Ω	·
B	*			+	;	K	Š	k	š	ï	¢	½	╗	╦	█	δ	√
C	*			,	<	L	Đ	l	đ	î	£	¼	╝	╠	▄	∞	ⁿ
D	*			-	=	M	Č	m	č	ì	¥	¡	╜	═	▌	φ	²
E	*			.	>	N	Č	n	č	Ä	₧	«	╛	╬	▐	ε	■
F	*			/	?	O	_	o		Å	ƒ	»	┐	╧	▀	∩	

Farsi

	*	0	1	2	3	4	5	6	7	8	9	A	B	C	D	E	F
0	*				0	@	P	'	p	ﺁ	ﺕ		۰	۲	ﻥ	ﻟ	ﺗ
1	*			!	1	A	Q	a	q	ﺃ	ﺙ	ﺍ	۱	۳	ﻩ	ﻡ	ﺛ
2	*			"	2	B	R	b	r	ﺅ	ﺝ	ﺎ	۲	۴	ﺓ	ﻧ	ﺟ
3	*			#	3	C	S	c	s	ﺇ	ﺡ	ﺏ	۳	۵	ﺍ	ﻫ	ﺣ
4	*			$	4	D	T	d	t	ﺈ	ﺥ	ﺐ	٤	۶	ﻭ	ﻣ	ﺧ
5	*			%	5	E	U	e	u	ﺉ	ﺩ	ﺑ	٥	۷	ﺔ	ﻨ	ﺩ
6	*			&	6	F	V	f	v	ﺊ	ﺫ	ﺒ	٦	۸	ﺕ	ﻩ	ﺫ
7	*			'	7	G	W	g	w	ﺋ	ﺭ	ﺓ	٧	۹	ﺖ	ﻮ	ﺭ
8	*			(	8	H	X	h	x	ﺌ	ﺯ	ﺔ	٨	٠	ﺚ	ﻯ	ﺯ
9	*			)	9	I	Y	i	y	ﺍ	ﺱ	ﺕ	٩	١	ﺛ	ﻲ	ﺱ
A	*			*	:	J	Z	j	z	ﺎ	ﺵ	ﺖ	٪	٢	ﺜ	ﺀ	ﺵ
B	*			+	;	K	[	k	{	ﺏ	ﺷ	ﺘ	٫	٣	ﺞ	ﺁ	ﺷ
C	*			,	<	L	\	l	¦	ﺑ	ﷺ	ﺚ	٬	٤	ﺟ	ﺃ	ﷺ
D	*			-	=	M	]	m	}	ﺒ	ﷻ	ﺜ	٭	٥	ﺣ	ﺅ	ﷻ
E	*			.	>	N	^	n	~	ﺓ	ﻻ	ﺞ	ٮ	٦	ﺧ	ﺇ	ﻻ
F	*			/	?	O	_	o		ﺔ	ﻻ	ﺟ	؟	٧	ﺩ	ﺈ	■

Urdu

*	0	1	2	3	4	5	6	7	8	9	A	B	C	D	E	F
0 *				0	@	P	'	p	۔	ۓ		۰	۲	۵	ـ	ّ
1 *			!	1	A	Q	a	q	ۃ	ۓ	ـ	۱	۶	۶	ف	ٗ
2 *			"	2	B	R	b	r	ۂ	۔	ـا	۲	آ	ں	ق	ن
3 *			#	3	C	S	c	s	ۓ	ں	ـٹ	۳	ا	۷	ک	ہ
4 *			$	4	D	T	d	t	▒	۔	ـب	۴	و	۸	گ	ھ
5 *			%	5	E	U	e	u	'	گ	ـپ	۵	ۃ	۹	ل	ء
6 *			&	6	F	V	f	v	۔	گ	ـت	۶	ٹ	۱۰	م	ی
7 *			'	7	G	W	g	w	۔	«	ـٹ	۷	ا	۱۱	ن	ھ
8 *			(	8	H	X	h	x	،	»	ـث	۸	ۃ	۱۲	و	ۃ
9 *			)	9	I	Y	i	y	۔	۷	ـج	۹	ۃ	۱۳	ی	۷
A *			*	:	J	Z	j	z	،	۷	ـچ	۱۰	ۃ	۱۴	ہ	۷
B *			+	;	K	[	k	{	۔	گ	ـح	۱۱	ۃ	۱۵	ھ	ل
C *			,	<	L	\	l	¦	۔	گ	ـخ	۱۲	ۃ	۲	ھ	ت
D *			-	=	M	]	m	}	۔	۷	ـد	۱۳	ۃ	۵	ھ	ی
E *			.	>	N	^	n	~	۔	۷	ـڈ	۱۴	ۃ	۷	ھ	■
F *			/	?	O	_	o		۔	۔	ـذ	۱۵	ۃ	۷	ھ	

Greek DEC

*	0	1	2	3	4	5	6	7	8	9	A	B	C	D	E	F
0 *				0	@	P	'	p	Ά	Ε	á	°	ΐ		Ϋ	
1 *			!	1	A	Q	a	q	Έ	æ	í	±	Α	Π	α	π
2 *			"	2	B	R	b	r	Ή	Ά	ó	²	Β	Ρ	β	ρ
3 *			#	3	C	S	c	s	Ί	ô	ú	³	Γ	Σ	γ	σ
4 *			$	4	D	T	d	t	ä	ö	ñ	┤	Δ	Τ	δ	τ
5 *			%	5	E	U	e	u	ά	ò	¥	╡	Ε	Υ	ε	υ
6 *			&	6	F	V	f	v	ή	û	¦	╢	Ζ	Φ	ζ	φ
7 *			'	7	G	W	g	w	ί	ù	§	╖	Η	Χ	η	χ
8 *			(	8	H	X	h	x	ê	Ό	¿	╕	Θ	Ψ	θ	ψ
9 *			)	9	I	Y	i	y	ë	Ύ	©	╣	Ι	Ω	ι	ω
A *			*	:	J	Z	j	z	ό	Ώ	ª	║	Κ	ά	κ	ς
B *			+	;	K	[	k	{	ΰ	¢	«	╗	Λ	έ	λ	ύ
C *			,	<	L	\	l	|	ΐ	£	¬	╝	Μ	ή	μ	ώ
D *			-	=	M	]	m	}	΄	¥		╜	Ν	ί	ν	²
E *			.	>	N	^	n	~	Ά	Ή	»	╛	Ξ		ξ	■
F *			/	?	O	_	o		Έ	ί	»	┐	Ο	ό	ο	

ELOT 928

*	0	1	2	3	4	5	6	7	8	9	A	B	C	D	E	F
0 *				0	@	P	'	p				°		Π	Ϋ	π
1 *			!	1	A	Q	a	q			¨	±	A	Ρ	α	ρ
2 *			"	2	B	R	b	r				²	B		β	ς
3 *			#	3	C	S	c	s				³	Γ	Σ	γ	σ
4 *			$	4	D	T	d	t			¤	΄	Δ	Τ	δ	τ
5 *			%	5	E	U	e	u			¥		E	Υ	ε	υ
6 *			&	6	F	V	f	v			¦	Ά	Z	Φ	ζ	φ
7 *			'	7	G	W	g	w			§		H	Χ	η	χ
8 *			(	8	H	X	h	x			¨	Ε	Θ	Ψ	θ	ψ
9 *			)	9	I	Y	i	y			©	Η	I	Ω	ι	ω
A *			*	:	J	Z	j	z			ª	Ι	K	Ϊ	κ	ϊ
B *			+	;	K	[	k	{			«	»	Λ	Ϋ	λ	ϋ
C *			,	<	L	\	l	|				Ό	M	ά	μ	ό
D *			-	=	M	]	m	}				½	N	έ	ν	ύ
E *			.	>	N	^	n	~				Υ	Ξ	ή	ξ	ώ
F *			/	?	O	_	o					Ώ	O	ί	ο	

UK_ASCII

*	0	1	2	3	4	5	6	7	8	9	A	B	C	D	E	F
0 *				0	@	P	'	p	Ç	É	á	░	└	╨	α	≡
1 *			!	1	A	Q	a	q	ü	æ	í	▒	┴	╤	β	±
2 *			"	2	B	R	b	r	é	Æ	ó	▓	┬	╥	Γ	≥
3 *			£	3	C	S	c	s	â	ô	ú	│	├	╙	π	≤
4 *			$	4	D	T	d	t	ä	ö	ñ	┤	─	╘	Σ	⌠
5 *			%	5	E	U	e	u	à	ò	Ñ	╡	┼	╒	σ	⌡
6 *			&	6	F	V	f	v	å	û	ª	╢	╞	╓	µ	÷
7 *			'	7	G	W	g	w	ç	ù	º	╖	╟	╫	τ	≈
8 *			(	8	H	X	h	x	ê	ÿ	¿	╕	╚	╪	Φ	°
9 *			)	9	I	Y	i	y	ë	Ö	⌐	╣	╔	┘	Θ	•
A *			*	:	J	Z	j	z	è	Ü	¬	║	╩	┌	Ω	·
B *			+	;	K	[	k	{	ï	¢	½	╗	╦	█	δ	√
C *			,	<	L	\	l	|	î	£	¼	╝	╠	▄	∞	ⁿ
D *			-	=	M	]	m	}	ì	¥	¡	╜	═	▌	ø	²
E *			.	>	N	^	n	~	Ä	₧	«	╛	╬	▐	ε	■
F *			/	?	O	_	o		Å	ƒ	»	┐	╧	▀	∩	

US_ASCII

*	0	1	2	3	4	5	6	7	8	9	A	B	C	D	E	F
0 *				0	@	P	'	p	Ç	É	á	░	└	╨	α	≡
1 *			!	1	A	Q	a	q	ü	æ	í	▒	┴	╤	β	±
2 *			"	2	B	R	b	r	é	Æ	ó	▓	┬	╥	Γ	≥
3 *			#	3	C	S	c	s	â	ô	ú	│	├	╙	π	≤
4 *			$	4	D	T	d	t	ä	ö	ñ	┤	─	╘	Σ	⌠
5 *			%	5	E	U	e	u	à	ò	Ñ	╡	┼	╒	σ	⌡
6 *			&	6	F	V	f	v	å	û	ª	╢	╞	╓	µ	÷
7 *			'	7	G	W	g	w	ç	ù	º	╖	╟	╫	τ	≈
8 *			(	8	H	X	h	x	ê	ÿ	¿	╕	╚	╪	Φ	°
9 *			)	9	I	Y	i	y	ë	Ö	⌐	╣	╔	┘	Θ	∙
A *			*	:	J	Z	j	z	è	Ü	¬	║	╩	┌	Ω	·
B *			+	;	K	[	k	{	ï	¢	½	╗	╦	█	δ	√
C *			,	<	L	\	l	|	î	£	¼	╝	╠	▄	∞	ⁿ
D *			-	=	M	]	m	}	ì	¥	¡	╜	═	▌	ø	²
E *			.	>	N	^	n	~	Ä	₧	«	╛	╬	▐	∈	■
F *			/	?	O	_	o		Å	ƒ	»	┐	╧	▀	∩	

Swedish

*	0	1	2	3	4	5	6	7	8	9	A	B	C	D	E	F
0 *				0	É	P	é	p	Ç	É	á	░	└	╨	α	≡
1 *			!	1	A	Q	a	q	ü	æ	í	▒	┴	╤	β	±
2 *			"	2	B	R	b	r	é	Æ	ó	▓	┬	╥	Γ	≥
3 *			#	3	C	S	c	s	â	ô	ú	│	├	╙	π	≤
4 *			¤	4	D	T	d	t	ä	ö	ñ	┤	─	╘	Σ	⌠
5 *			%	5	E	U	e	u	à	ò	Ñ	╡	┼	╒	σ	⌡
6 *			&	6	F	V	f	v	å	û	ª	╢	╞	╓	µ	÷
7 *			'	7	G	W	g	w	ç	ù	º	╖	╟	╫	τ	≈
8 *			(	8	H	X	h	x	ê	ÿ	¿	╕	╚	╪	Φ	°
9 *			)	9	I	Y	i	y	ë	Ö	⌐	╣	╔	┘	Θ	∙
A *			*	:	J	Z	j	z	è	Ü	¬	║	╩	┌	Ω	·
B *			+	;	K	Ä	k	ä	ï	¢	½	╗	╦	█	δ	√
C *			,	<	L	Ö	l	ö	î	£	¼	╝	╠	▄	∞	ⁿ
D *			-	=	M	Å	m	å	ì	¥	¡	╜	═	▌	ø	²
E *			.	>	N	Ü	n	ü	Ä	₧	«	╛	╬	▐	∈	■
F *			/	?	O	_	o		Å	ƒ	»	┐	╧	▀	∩	

German

	*	0	1	2	3	4	5	6	7	8	9	A	B	C	D	E	F
0	*				0	§	P	'	p	Ç	É	á	▒	└	╨	α	≡
1	*			!	1	A	Q	a	q	ü	æ	í		┴	╥	β	±
2	*			"	2	B	R	b	r	é	Æ	ó	▓	┬	╤	Γ	≥
3	*			#	3	C	S	c	s	â	ô	ú	│	├	╦	π	≤
4	*			$	4	D	T	d	t	ä	ö	ñ	┤	─	╠	Σ	⌠
5	*			%	5	E	U	e	u	à	ò	Ñ	╡	┼	╧	σ	⌡
6	*			&	6	F	V	f	v	å	û	ª	╢	╞	╨	µ	÷
7	*			'	7	G	W	g	w	ç	ù	º	╖	╟	╤	τ	≈
8	*			(	8	H	X	h	x	ê	ÿ	¿	╕	╚	╪	Φ	°
9	*			)	9	I	Y	i	y	ë	Ö	⌐	╣	╔	┘	Θ	•
A	*			*	:	J	Z	j	z	è	Ü	¬	║	╩	┌	Ω	·
B	*			+	;	K	Ä	k	ä	ï	¢	½	╗	╦	╫	δ	√
C	*			,	<	L	Ö	l	ö	î	£	¼	╝	╠	╪	∞	ⁿ
D	*			-	=	M	Ü	m	ü	ì	¥	¡	╜	═	▄	ø	²
E	*			.	>	N	^	n	ß	Ä	₧	«	╛	╬	▌	∈	■
F	*			/	?	O	_	o		Å	ƒ	»	┐	╧	█	∩	

Portuguese

	*	0	1	2	3	4	5	6	7	8	9	A	B	C	D	E	F
0	*				0	§	P	'	p	Ç	É	á	▒	└	╨	α	≡
1	*			!	1	A	Q	a	q	ü	æ	í		┴	╥	β	±
2	*			"	2	B	R	b	r	é	Æ	ó	▓	┬	╤	Γ	≥
3	*			#	3	C	S	c	s	â	ô	ú	│	├	╦	π	≤
4	*			$	4	D	T	d	t	ä	ö	ñ	┤	─	╠	Σ	⌠
5	*			%	5	E	U	e	u	à	ò	Ñ	╡	┼	╧	σ	⌡
6	*			&	6	F	V	f	v	å	û	ª	╢	╞	╨	µ	÷
7	*			'	7	G	W	g	w	ç	ù	º	╖	╟	╤	τ	≈
8	*			(	8	H	X	h	x	ê	ÿ	¿	╕	╚	╪	Φ	°
9	*			)	9	I	Y	i	y	ë	Ö	⌐	╣	╔	┘	Θ	•
A	*			*	:	J	Z	j	z	è	Ü	¬	║	╩	┌	Ω	·
B	*			+	;	K	Ã	k	½	ï	¢	½	╗	╦	╫	δ	√
C	*			,	<	L	Ç	l	ç	î	£	¼	╝	╠	╪	∞	ⁿ
D	*			-	=	M	Õ	m	õ	ì	¥	¡	╜	═	▄	ø	²
E	*			.	>	N	^	n	°	Ã	₧	«	╛	╬	▌	∈	■
F	*			/	?	O	_	o		Å	ƒ	»	┐	╧	█	∩	

French

*	0	1	2	3	4	5	6	7	8	9	A	B	C	D	E	F
0 *				0	à	P	'	p	Ç	É	á	░	└	╨	α	≡
1 *			!	1	A	Q	a	q	ü	æ	í	▒	┴	╥	β	±
2 *			"	2	B	R	b	r	é	Æ	ó	▓	┬	╙	Γ	≥
3 *			£	3	C	S	c	s	â	ô	ú	│	├	╘	π	≤
4 *			$	4	D	T	d	t	ä	ö	ñ	┤	─	╒	Σ	⌠
5 *			%	5	E	U	e	u	à	ò	Ñ	╡	┼	╓	σ	⌡
6 *			&	6	F	V	f	v	å	û	ª	╢	╞	╫	µ	÷
7 *			'	7	G	W	g	w	ç	ù	º	╖	╟	╪	τ	≈
8 *			(	8	H	X	h	x	ê	ÿ	¿	╕	╚	┘	Φ	°
9 *			)	9	I	Y	i	y	ë	Ö	⌐	╣	╔	┌	Θ	∙
A *			*	:	J	Z	j	z	è	Ü	¬	║	╩	█	Ω	·
B *			+	;	K	°	k	é	ï	¢	½	╗	╦	▄	δ	√
C *			,	<	L	ç	l	ù	î	£	¼	╝	╠	▌	∞	ⁿ
D *			-	=	M	§	m	è	ì	¥	¡	╜	═	▐	ø	²
E *			.	>	N	^	n	¨	Ä	₧	«	╛	╬	▀	∈	■
F *			/	?	O	_	o		Å	ƒ	»	┐	╧	█	∩	

Italian

*	0	1	2	3	4	5	6	7	8	9	A	B	C	D	E	F
0 *				0	§	P	ù	p	Ç	É	á	░	└	╨	α	≡
1 *			!	1	A	Q	a	q	ü	æ	í	▒	┴	╥	β	±
2 *			"	2	B	R	b	r	é	Æ	ó	▓	┬	╙	Γ	≥
3 *			£	3	C	S	c	s	â	ô	ú	│	├	╘	π	≤
4 *			$	4	D	T	d	t	ä	ö	ñ	┤	─	╒	Σ	⌠
5 *			%	5	E	U	e	u	à	ò	Ñ	╡	┼	╓	σ	⌡
6 *			&	6	F	V	f	v	å	û	ª	╢	╞	╫	µ	÷
7 *			'	7	G	W	g	w	ç	ù	º	╖	╟	╪	τ	≈
8 *			(	8	H	X	h	x	ê	ÿ	¿	╕	╚	┘	Φ	°
9 *			)	9	I	Y	i	y	ë	Ö	⌐	╣	╔	┌	Θ	∙
A *			*	:	J	Z	j	z	è	Ü	¬	║	╩	█	Ω	·
B *			+	;	K	°	k	à	ï	¢	½	╗	╦	▄	δ	√
C *			,	<	L	ç	l	ò	î	£	¼	╝	╠	▌	∞	ⁿ
D *			-	=	M	é	m	è	ì	¥	¡	╜	═	▐	ø	²
E *			.	>	N	^	n	ì	Ä	₧	«	╛	╬	▀	∈	■
F *			/	?	O	_	o		Å	ƒ	»	┐	╧	█	∩	

Norwegian

	*	0	1	2	3	4	5	6	7	8	9	A	B	C	D	E	F
0	*				0	@	P	'	p	Ç	É	á	▒	└	╨	α	≡
1	*			!	1	A	Q	a	q	ü	æ	í	▒	┴	╥	β	±
2	*			"	2	B	R	b	r	é	Æ	ó	▒	┬	╙	Γ	≥
3	*			#	3	C	S	c	s	â	ô	ú	▒	├	╘	π	≤
4	*			$	4	D	T	d	t	ä	ö	ñ	┤	─	╒	Σ	⌠
5	*			%	5	E	U	e	u	à	ò	Ñ	╡	┼	╓	σ	⌡
6	*			&	6	F	V	f	v	å	û	ª	╢	╞	╫	µ	÷
7	*			'	7	G	W	g	w	ç	ù	º	╖	╟	╪	τ	≈
8	*			(	8	H	X	h	x	ê	ÿ	¿	╕	╚	┘	Φ	°
9	*			)	9	I	Y	i	y	ë	Ö	⌐	╣	╔	┌	Θ	∙
A	*			*	:	J	Z	j	z	è	Ü	¬	║	╩	█	Ω	·
B	*			+	;	K	Æ	k	æ	ï	¢	½	╗	╦	▄	δ	√
C	*			,	<	L	Ø	l	ø	î	£	¼	╝	╠	▌	∞	ⁿ
D	*			-	=	M	Å	m	å	ì	¥	¡	╜	═	▐	φ	²
E	*			.	>	N	^	n	‾	Ä	₧	«	╛	╬	▀	∈	■
F	*			/	?	O	_	o		Å	ƒ	»	┐	╧	▄	∩	

Spanish

	*	0	1	2	3	4	5	6	7	8	9	A	B	C	D	E	F
0	*				0	§	P	'	p	Ç	É	á	▒	└	╨	α	≡
1	*			!	1	A	Q	a	q	ü	æ	í	▒	┴	╥	β	±
2	*			"	2	B	R	b	r	é	Æ	ó	▒	┬	╙	Γ	≥
3	*			£	3	C	S	c	s	â	ô	ú	▒	├	╘	π	≤
4	*			$	4	D	T	d	t	ä	ö	ñ	┤	─	╒	Σ	⌠
5	*			%	5	E	U	e	u	à	ò	Ñ	╡	┼	╓	σ	⌡
6	*			&	6	F	V	f	v	å	û	ª	╢	╞	╫	µ	÷
7	*			'	7	G	W	g	w	ç	ù	º	╖	╟	╪	τ	≈
8	*			(	8	H	X	h	x	ê	ÿ	¿	╕	╚	┘	Φ	°
9	*			)	9	I	Y	i	y	ë	Ö	⌐	╣	╔	┌	Θ	∙
A	*			*	:	J	Z	j	z	è	Ü	¬	║	╩	█	Ω	·
B	*			+	;	K	¡	k	°	ï	¢	½	╗	╦	▄	δ	√
C	*			,	<	L	Ñ	l	ñ	î	£	¼	╝	╠	▌	∞	ⁿ
D	*			-	=	M	¿	m	ç	ì	¥	¡	╜	═	▐	φ	²
E	*			.	>	N	^	n	~	Ä	₧	«	╛	╬	▀	∈	■
F	*			/	?	O	_	o		Å	ƒ	»	┐	╧	▄	∩	

Siemens Turk

	*	0	1	2	3	4	5	6	7	8	9	A	B	C	D	E	F
0	*				0	@	P	'	p	Ç	É	á	░	└	Ğ	α	ğ
1	*			!	1	A	Q	a	q	ü	æ	í	▒	┴	╥	β	±
2	*			"	2	B	R	b	r	é	Æ	ó	▓	┬	╤	Γ	≥
3	*			#	3	C	S	c	s	â	ô	ú	│	├	╦	π	≤
4	*			$	4	D	T	d	t	ä	ö	ñ	┤	─	╠	Σ	⌠
5	*			%	5	E	U	e	u	à	ò	Ñ	╡	┼	═	σ	⌡
6	*			&	6	F	V	f	v	å	û	ª	╢	╞	╬	µ	ÖÖ
7	*			'	7	G	W	g	w	ç	ù	º	╖	╟	╧	ç	≈
8	*			(	8	H	X	h	x	ê	ÿ	¿	╕	╫	╨	Φ	°
9	*			)	9	I	Y	i	y	ë	Ö	⌐	╣	╪	╤	Θ	∙
A	*			*	:	J	Z	j	z	è	Ü	¬	║	┘	╥	Ω	·
B	*			+	;	K	[	k	{	ï	¢	½	╗	┌	╙	δ	√
C	*			,	<	L	\	l	|	î	£	¼	╝	█	╘	∞	ü
D	*			-	=	M	]	m	}	ì	¥	¡	╜	▄	╒	Ø	¹
E	*			.	>	N	^	n	~	Ä	₧	«	╛	▌	╓	∈	ş
F	*			/	?	O	_	o		Å	ƒ	»	┐	▐	╫	∩	ö

DEC Turkish

	*	0	1	2	3	4	5	6	7	8	9	A	B	C	D	E	F
0	*				0	@	P	'	p	Ç	É	á	░	└	Ğ	α	ğ
1	*			!	1	A	Q	a	q	ü	æ	í	▒	┴	╥	β	±
2	*			"	2	B	R	b	r	é	Æ	ó	▓	┬	╤	Γ	≥
3	*			#	3	C	S	c	s	â	ô	ú	│	├	╦	π	≤
4	*			$	4	D	T	d	t	ä	ö	ñ	┤	─	╠	Σ	⌠
5	*			%	5	E	U	e	u	à	ò	Ñ	╡	┼	═	σ	⌡
6	*			&	6	F	V	f	v	å	û	ª	╢	╞	╬	µ	ÖÖ
7	*			'	7	G	W	g	w	ç	ù	º	╖	╟	╧	ç	≈
8	*			(	8	H	X	h	x	ê	ÿ	¿	╕	╫	╨	Φ	°
9	*			)	9	I	Y	i	y	ë	Ö	⌐	╣	╪	╤	Θ	∙
A	*			*	:	J	Z	j	z	è	Ü	¬	║	┘	╥	Ω	·
B	*			+	;	K	[	k	{	ï	¢	½	╗	┌	╙	δ	√
C	*			,	<	L	\	l	|	î	£	¼	╝	█	╘	∞	ü
D	*			-	=	M	]	m	}	ì	¥	¡	╜	▄	╒	Ø	²
E	*			.	>	N	^	n	~	Ä	₧	«	╛	▌	╓	∈	ş
F	*			/	?	O	_	o		Å	ƒ	»	┐	▐	╫	∩	ö

F

RESIDENT FONTS

This appendix provides print samples of the printer's nineteen resident fonts.

Roman 10

The 24-wire dot-matrix printer prints quality
characters and symbols using a var
iety of sizes and fonts.

Sanserif 10

The 24-wire dot-matrix printer prints quality
characters and symbols using a var
iety of sizes and fonts.

Courier 10

The 24-wire dot-matrix printer prints quality
characters and symbols using a var
iety of sizes and fonts.

Prestige 10

The 24-wire dot-matrix printer prints quality
characters and symbols using a var
iety of sizes and fonts.

Script 10

The 24-wire dot-matrix printer prints quality
characters and symbols using a var
iety of sizes and fonts.

OCR B 10

The 24-wire dot-matrix printer prints quality
characters and symbols using a var
iety of sizes and fonts.

OCR A 10

The 24-wire dot-matrix printer prints quality
characters and symbols using a var
iety of sizes and fonts.

Orator 10

THE 24-WIRE DOT-MATRIX PRINTER PRINTS QUALITY
CHARACTERS AND SYMBOLS USING A VAR
IETY OF SIZES AND FONTS.

Draft 10

The 24-wire dot-matrix printer prints quality
characters and symbols using a var
iety of sizes and fonts.

Gothic 10

The 24-wire dot-matrix printer prints quality
characters and symbols using a var
iety of sizes and fonts.

Souvenir 10

The 24-wire dot-matrix printer prints quality
characters and symbols using a var
iety of sizes and fonts.

INDEX

A

Adjustments
- left margin……..……6-6,10-9,11-14
- top-of-form…….……11-13,11-14
- paper thickness……..5-3,10-4,10-9,10-11

AMOUNT…….…7-4,11-15,11-41

ATTRIB……..…11-5,11-35

B

Bidirectional printing……...…..11-2,11-23

BUFFER……..4-5,10-1,11-11,12-7

BUZZER……..…….4-6,4-10,5-6,8-7

C

Cables…….1-6,12-1,12-14
- LAN…….10-1,12-1
- parallel interface……10-1,12-1,12-2,12-4
- Serial interface….....…12-1,12-6,12-7,12-8
- USB……..…1-3,2-6,5-12,1-15

Centronics……...….12-1

Character……...…5-1,10-3,11-7,13-1

Cleaning…….7-1,7-2,7-4

Continuous forms……..…1-6,3-1,8-4,10-8
- Loading……..…….5-6,5-32,6-2,8-4
- Placement……...….3-1,3-5,7-1
- tearing off …….….4-4,4-8

Control panel……..……1-6,4-1,4-4

D

Default……4-5,5-1,6-1,11-2,12-11

Diagnostic functions……....8-1,8-8

Download…….…….10-1,11-28,11-29,11-30

DPL24C PLUS……..….11-1,11-38

DRAFT……4-3,5-3,10-2,14-1

E

Eject…….....….2-3,2-4,3-4,4-4,5-7

Emulation…….2-8,5-2,8-3,11-1,11-2

Envelope……....3-1

Epson ESC/P2…….10-3,12-3,12-4

F

Feeding paper……..…..4-6,10-8
- form feed……...……4-4,5-5,10-5,11-2
- line feed…….4-7,10-5,11-2,11-23

Font……..…….4-3,5-3,8-7,14-1

Function……...….1-6,4-6,5-38,8-8,10-2

H

HEX-DUMP……...…….4-7,8-8

I

IBM Proprinter XL24E……10-3

Interface…….…1-6,2-6,5-1,5-8,10-1,12-1

L

Label……..…….3-1,3-6,4-3,4-4

LAN interface……..……12-1

LF/FF……...……4-4,5-7

Line feed……..4-7,10-5,11-2,11-23

Line spacing……...…….5-2,10-3,11-4,11-14

LIST……....……7-1,9-1,11-1,11-2

LOAD…….…2-3,3-4,4-4,4-8

Lubrication…….7-1

M

Maintenance…….....……7-1,12-3

Margin……4-11,6-1,6-6,10-9,10-11,11-2,11-13

Menu……..…….4-3,4-7,4-11,5-1

Multipart paper……..…3-1,10-4

N

Number of copies……..….3-2,10-3

O		S
ONLINE……..….3-3,4-1,4-3,4-4,6-2,12-3		Self-test……..4-12,5-38,8-8
Order number……7-1,9-1		Serial interface.....…12-1,12-6,12-7,12-8
P		
Page…….….4-11,5-4,6-1,8-2,10-3,13-1		Single sheet……..…..1-6,2-1,3-2,3-3,4-4,5-4,6-2,7-3
PAPER OUT…….…..2-4,4-3,12-2,12-3,12-4		
Paper path…….……3-3,6-1,6-2,6-5,8-4,8-5,8-7		Single sheets……..…..3-1,6-1,8-4,10-8
Power….….1-2,1-6,2-1,2-7,4-1,5-1,7-1,7-2,8-6,10-1		Software…….....……2-8,5-40,8-2,8-3,8-6,8-8
Print area……...10-8		Specification……...10-1,10-2,10-5,10-8,11-38,11-44
Print head…….1-4,1-6,2-2,2-3,3-2,4-6,5-1,7-1,8-7		Supplies……...……...9-1
Printer Driver……...2-8,5-2,8-3,8-6		**T**
Q		TEAR OFF…...…..4-3,4-4,4-7,4-8,5-1,5-7,5-32,5-35
QUALITY……....3-7,5-3,8-1,8-2,11-7,11-8,11-27		Top margin…….6-5,8-3,10-9,10-11,11-13,11-39
		U
R		Unidirectional printing…….…..11-2,11-23
Replacing the ribbon……..….7-5		Unpacking……...……1-1,1-3
Ribbon cartridge…….1-3,1-6,2-2,2-3,7-1,7-3,8-2,8-3		USB interface…….12-1,12-6
RS-232C……12-1,12-7,12-9,12-10		**W**
		WIDTH.....3-3,3-4,5-5,5-7,8-5,8-7,10-1,10-9,11-4

FUJITSU OFFICES

Please send your comments on this manual or on Fujitsu products to the following addresses:

North American Contact:
FUJITSU CANADA INC.
6975 Creditview Road, Unit 1
Mississauga, ON, Canada
L5N 8E9
Phone: +1-905-286-9666
Fax: +1-905-286-5997

European, Middle East, African Contact:
Fujitsu Technology Solutions GmbH
Mies-van-der-Rohe-Strasse 8
80807 Munich, Germany
Phone: +49-89-62060-0
Internet: www.fujitsu.com/fts/

Australian Contact:
FUJITSU AUSTRALIA LTD.
Fujitsu House 2 Julius Avenue
North Ryde N.S.W. 2113
Australia
Phone: +61-2-9776-4555
Fax: +61-2-9776-4556

Asian Contact:
FUJITSU HONG KONG LTD.
10/F., Lincoln House, 979 King's Road
Taikoo Place, Island East, Hong Kong
Phone: +852-2827-5780
Fax: +852-2827-4724

FUJITSU TAIWAN LTD.
19F, No.39, Section 1, Chung hwa Road Taipei, Taiwan
Phone: +886-2-2311-2255
Fax: +886-2-2311-2277

FUJITSU SYSTEMS BUSINESS (THAILAND) LTD.
22-23 Fl., Exchange Tower, 388 Sukhumvit Rd.
Klongtoey, Bangkok, Thailand 10110
Phone: +66-2-302-1500
Fax: +66-2-302-1555

FUJITSU ASIA PTE. LTD.
20, Science Park Road, #03-37 TeleTech Park
Singapore Science Park II, Singapore 117674
Phone: +65-6512-7555
Fax : +65 6512-7502

FUJITSU PHILIPPINES, INC.
2nd Floor, United Life Building, A. Arnaiz Avenue
Legaspi Village 1229, Makati City
Metro Manila, Philippines
Phone: +63-2-812-4001
Fax: +63-2-817-7576

FUJITSU (MALAYSIA) SDN. BHD.
Level 1 & 2, No.3505 Jalan Technokrat 5
Cyberjaya, Selangor Darul Ehsan, Malaysia 63000
Tel: +60-3-8318-3700
Fax: +60-3-8318-8700

PT FUJITSU INDONESIA OFFICES
Wisma Kyoei Prince 10th Floor
Jl. Jend. Sudirman Kav 3-4, Jakarta Indonesia 10220
Phone: +62-21-570-9330
Fax: +62-21-573-5150

FUJITSU VIETNAM LIMITED
Unit 01-03, 17th Floor, Keangnam Hanoi Landmark Tower,
Lot E6, Cau Giay New Urban Area, Me Tri Ward, Tu Liem
District, Hanoi, Vietnam
Phonel:+84-4-22203113
Fax: +84-4-22203114

Manufacturer contact:
FUJITSU ISOTEC LIMITED
Printer Business Division
135, Higashinozaki, Hobara-machi, Date-shi, Fukushima
960-0695, JAPAN
Phone: +81-24-574-2236,
Fax: +81-24-574-2382
URL http://jp.fujitsu.com/group/fit/en/
Contact Email fit-gsm@cs.jp.fujitsu.com

FUJITSU

KA02087-Y890-01EN