FCC Part 15
433.92 MHz Transmitter Certification
& 372 MHz Receiver Declaration of Conformity

Test Report

FCC ID: KJ8-TID372R2
FCC Rule Part: 15.231

ACS Report Number: 03-0263-15C231

Manufacturer: Wayne-Dalton Corporation
Equipment Type: RF Controlled Garage Door Opener
Model: Operator 41XR (Torsion *i*drive™)
Model Variants: 3651-372, 3652-372, 3750-372, 3751-372, 3752-372, 3771-372

Installation and Operators Guide

Wayne-Dalton Corp.
P.O. Box 67 Mt. Hope, OH 44660
(888) 827-3667
www.wayne-dalton.com

i drive™ for TORSION SPRINGS

Installation Instructions and Owner's Manual

Models: 3652-372
Covered under one or more of the following U.S. patents:
5,929,580/5,931,212/6,667,591/6,568,454/6,561,256/6,561,255/6,605,910/6,401,792/6,326,751/6,326,754/6,325,134/6,164,014/6,145,570/6,078,249/D474,215/D473,574/D473,573/D413,867/D413,579/D413,055/D421,031/D472,568/D472,910
other U.S. and foreign patents pending

Important Notice!

Read the enclosed instructions carefully before installing/operating this garage door opener. Pay close attention to all warning labels and notes. This manual should be attached to the wall in close proximity to the garage door opener.

© Copyright 2003, 2004 Wayne-Dalton Corp.
Part No. 305871
Rev.5 1/30/2004

Table of Contents

Important Safety Instructions .... 3.
Package Contents .... 4.
Tools Needed .... 5.
Available Accessories .... 5.
Pre-Installation Inspection .... 6.
Torsion idrive Installation .... 7. - 12.
Pre-Operation Installation .... 13. - 25.
Operation .... 26. - 29.
Maintenance .... 30.
Troubleshooting .... 31. - 32.
Warranty .... 32.
Customer Service Number .... 33.

After installation is complete, fasten this manual near garage door. Perform monthly maintenance (see Maintenance section page 30) and periodic checks, as recommended.

FCC and IC Statement

FCC Regulatory Information:

This device complies with Part 15 of the FCC Rules. Operation is subject to the following two conditions: (1) this device may not cause harmful interference, and (2) this device must accept any interference received, including interference that may cause undesired operation.

IC Regulatory Information:

Operation is subject to the following two conditions: (1) this device may not cause interference, and (2) this device must accept any interference, including interference that may cause undesired operation of the device.

NOTE: This equipment has been tested and found to comply with limits for a Class B digital device, pursuant to Part 15 of FCC Rules. These limits are designed to provide reasonable protection against harmful interference in a residential installation. This equipment generates, uses and can radiate radio frequency energy and, if not installed and used in accordance with these instructions, may cause harmful interference to radio communication; however, there is no guarantee that interference will not occur in a particular installation. If this equipment does cause harmful interference to radio or television reception, which can be determined by turning equipment off and on, user is encouraged to try to correct interference by one or more of the following measures: Reorient or relocate receiving antenna. Increase separation between equipment and receiver. Connect equipment into an outlet on a circuit different from that which receiver is connected. Consult your dealer or/and experienced radio/television technician for help. WARNING: Changes or modifications to this unit not expressly approved by party responsible for compliance could void user’s authority to operate this equipment.

IMPORTANT SAFETY INSTRUCTIONS FOR INSTALLATION AND USE

WARNING: INCORRECT INSTALLATION CAN LEAD TO SEVERE OR FATAL INJURY. FOLLOW INSTRUCTIONS.

WARNING: IT IS VITAL FOR THE SAFETY OF PERSONS TO FOLLOW ALL INSTRUCTIONS. SAVE THESE INSTRUCTIONS.

READ AND FOLLOW ALL INSTALLATION INSTRUCTIONS.

Do not connect the opener power head to a power source until instructed to do so.

Install the entrapment warning label next to the wall station in a prominent location. For products requiring an emergency disconnect, install the emergency release marking on or next to the emergency disconnect.

Remove all ropes and remove or make inoperative all locks connected to the garage door before installing the opener.

Do not wear rings, watches or loose clothing when installing or servicing a garage door system.

Install only on a properly installed garage door. An improperly balanced door could cause severe injury. Have a qualified service person make repairs to cables, spring assemblies, and other hardware before installing the opener.

Where possible, install the opener power head seven feet or more above the floor. For products requiring an emergency release, mount emergency release six feet above the floor.

Locate the wall station: (a) within sight of door, (b) at a minimum height of five feet, so small children cannot reach it, and (c) away from all moving parts of the door.

After installing the opener, the door must reverse when it contacts a 1- 1/2” high object (or 2 x 4 board laid flat) on the floor.

Installation and wiring must comply with local building and electrical codes. Connect power cord to a properly grounded outlet. Do not remove the ground pin from power cord.

Package Contents:

Three-button Transmitter (2)

Gear Assemblies (2)

5 Button Wireless Keyless Entry (KEP3) W/ Hardware

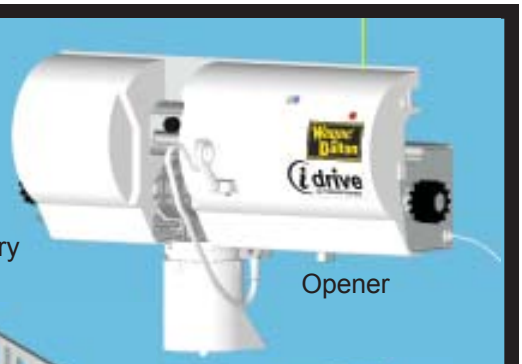

Opener

Multi-Function Wall Station Assembly

6' Power Cord

Mounting Bracket

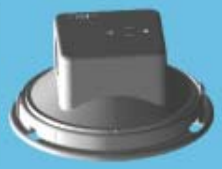

Owners Manual

Installation Video

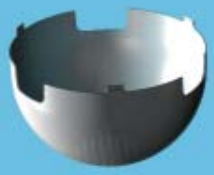

Light Fixture Assembly w/ Diffuser

Grease Packet (1)

Entrapment Label

Cable Keeper Assemblies W/ Hardware (2) (Right and Left)

Photoelectric Safety Sensors W/Hardware

Hardware Kit:

Disconnect Handle (1)

Handle Bracket (1)

Disconnect Cable (1)

Emergency Disconnect Label (1)

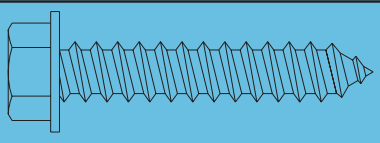

5/16 x 1-5/8" Hex Head Lag Screws (2)

Power Cord Clip (adhesive back) (1)

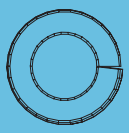

5/16 lock Washer (2)

Insulated Staples (12)

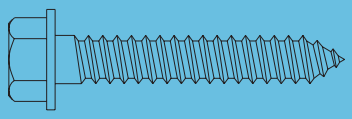

1/4 x 1-1/2" Hex Head Lag Screws (4)

"S" Hook (1)

Hardwire Plate

5/16-18 Nut (2)

#6-25 x 1/4" Self Tapping Screw (2)

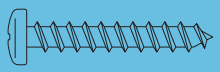

#6 x 7/8" Phillips Pan Head Screws (4)

Cable Clips (4)

Disconnect Cable Guide Bracket

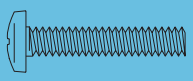

#6-32 x 3/4" Phillips Pan Head Screw (1)

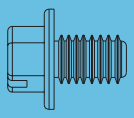

1/4-20 x 3/8" Tapping Screw (4)

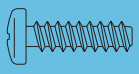

#6-20 x 1/2" Plastifast Screw (1)

Tools Needed:

Available Accessories:

Infrared Safety Sensor
Model no: 3967
Part no: 252118

Multi-Function
Wall-station RF Transmitter
Model no: 3977
Part no: XXXXXX

3-Button Mini RF
Transmitter
Model no: 3973
Part no: 302083

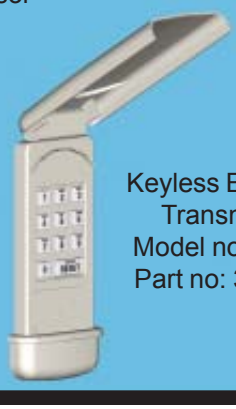

Keyless Entry RF
Transmitter
Model no: KEP2
Part no: 302078

Deluxe Wireless Light Kit
Model no: 3951-ULD
Part no: XXXXXX

Pre-Installation Inspection

Before installing Torsion idrive™, ensure your door system meets the following requirements. Follow the illustration below as a visual guide.

⚠CAUTION DO NOT INSTALL THIS OPENER ON YOUR DOOR UNLESS THE FOLLOWING ITEMS ARE MET.

- ☐ The torsion tube must be **1”** in diameter.
- ☐ There must be at least **30-3/8"** of clear torsion tube between the right (inside garage looking out) cable drum and the counterbalance spring. When installing idrive, ensure there is at least **6"** of clearance between the “S” hook and the disconnect cable guide bracket.
- ☐ The motor requires between **3-1/4"** to **5"** of headroom above the center of the torsion tube.
- ☐ There must be at least **7.5"** of clearance between the top of the door and the center of the torsion tube.
- ☐ Required distance from the center of the torsion tube to the header (mounting location) must be **2-1/2"** to **3-3/8"**.
- ☐ Your door must not exceed **8'** in height.
- ☐ Torsion idrive™ will only work on multi-sectional doors. Do not install in one piece doors.
- ☐ Your Garage Door must be properly balanced (door must not be heavy to lift, nor lift by itself). Maximum door weight must not exceed **400 lb**.

See the illustration below for the dimensions required for the Torsion idrive™ Garage Door Opener.

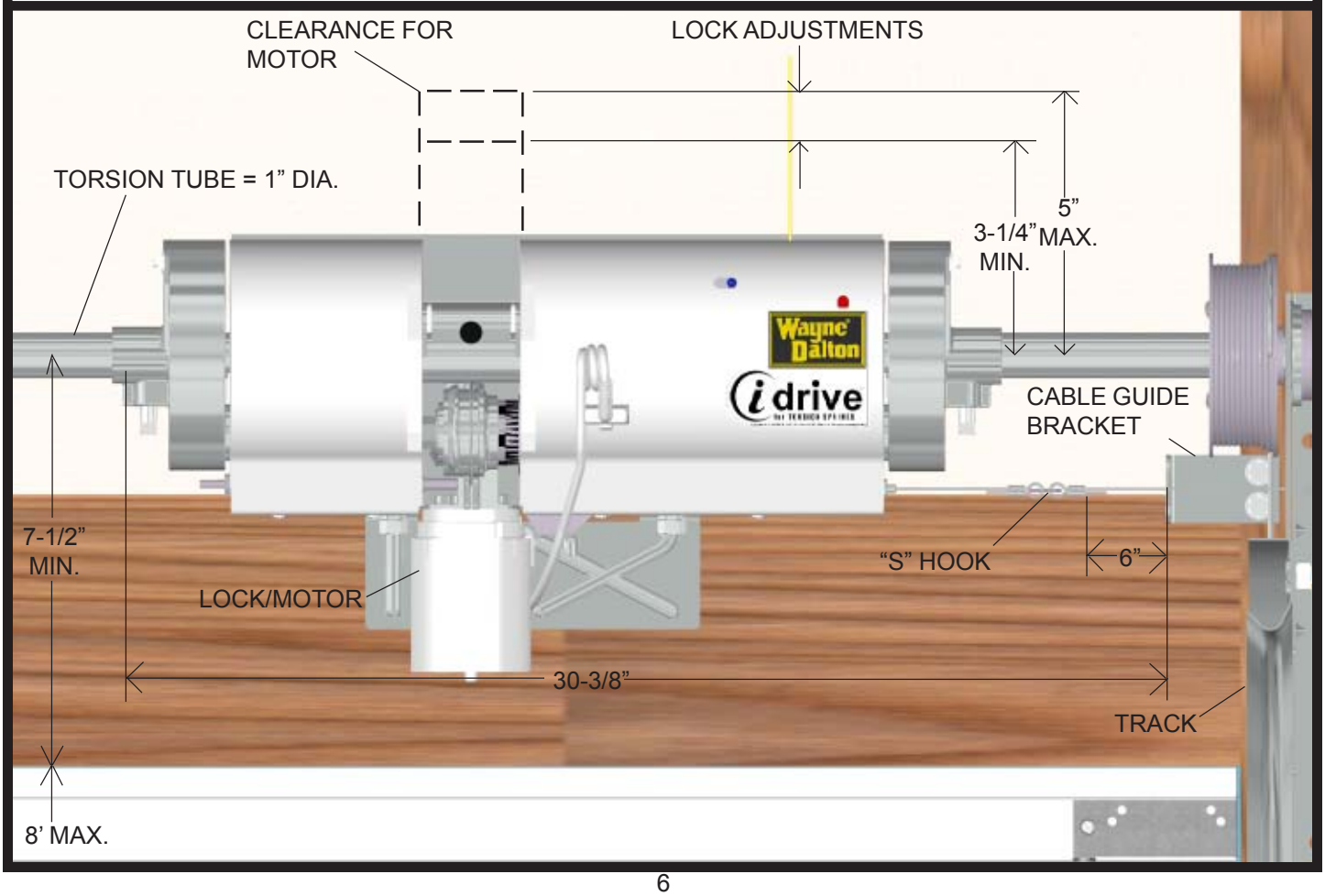

Torsion *i*drive™ Installation

Step 1

If there are no suitable mounting surfaces to mount the opener, a strong mounting support will be needed. Securely fasten a wood (2" x 6" recommended) mounting surface for the opener. Make sure it is flush with the header and located to allow the opener to secure to it. Install the adjustable wall bracket to the studs in the wall plate. Loosely secure with the 5/16-18 nuts and lock washers provided.

IMPORTANT! This opener will not install properly on doors with offsets other than 3-3/8" and 2-1/2".

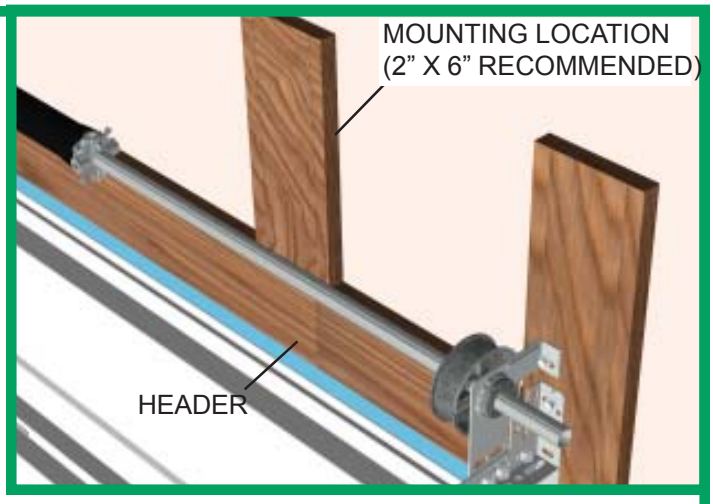

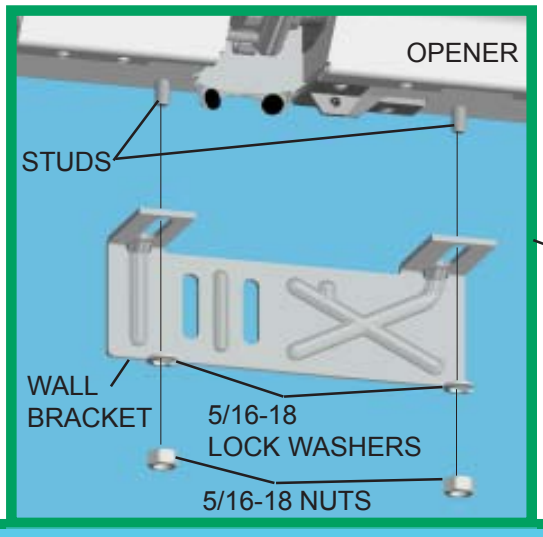

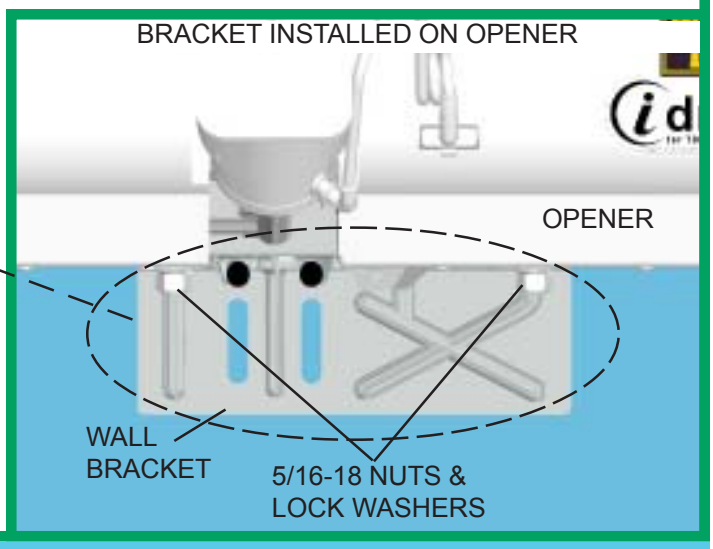

Step 2

Locate both gear assemblies. Remove the bridge gear from the gear assembly. Place the main gear onto the torsion tube. Orient the bridge gear so that it can slide into position surrounding the torsion tube. Ensure that both pieces fit together properly. Secure the bridge gear to the main gear with the (2) 1/4-20 x 3/8" screws. Repeat procedure with second gear assembly. Slide the gear assemblies 19" apart. See illustration for position of driven gear assemblies.

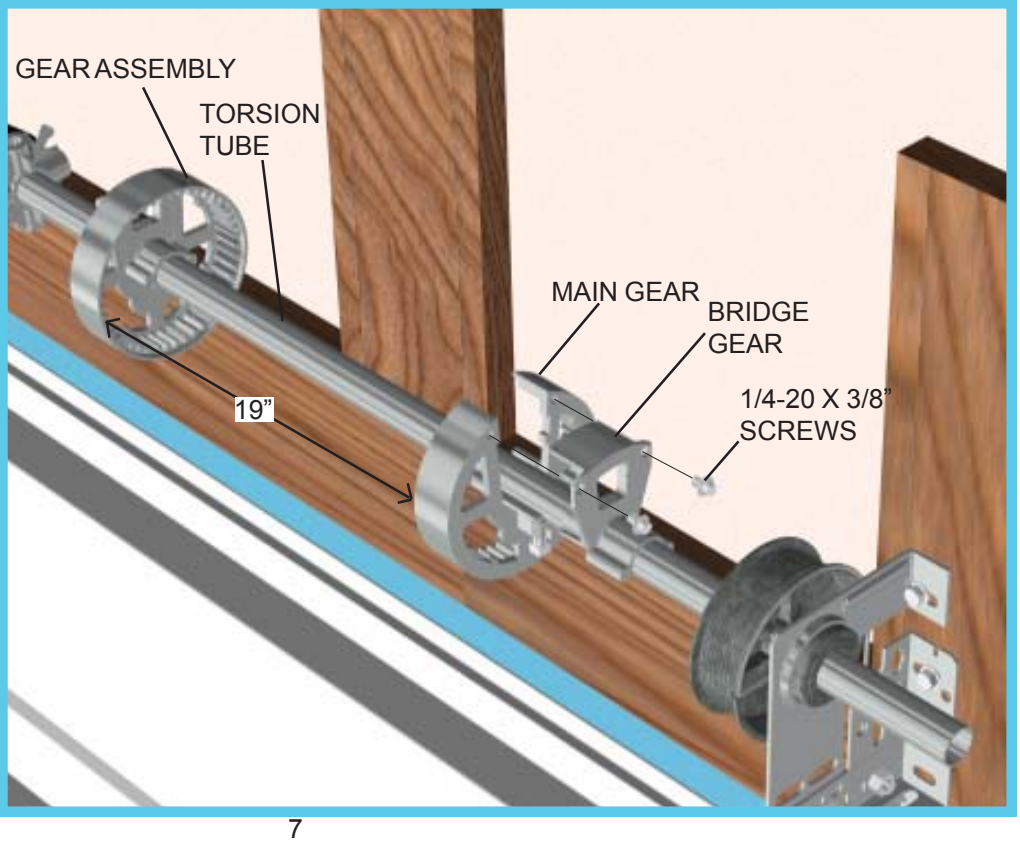

Step 3

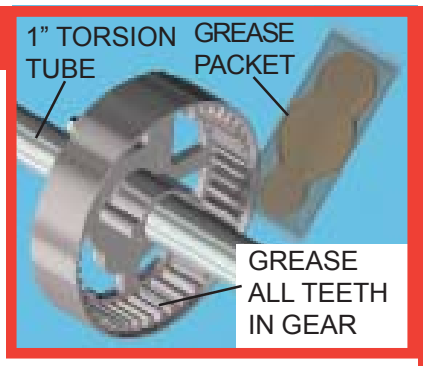

Lubricate both right hand and left hand gear assemblies, with the grease provided. Apply grease along the torsion tube where the opener will mount. Place the opener over the 1" torsion tube and between the two gear assemblies. Center the opener mounting bracket over the mounting support. Lift the opener slightly and slide the left hand gear assembly over so that the left hand drive gear meshes with and rests on the teeth of the left hand gear assembly. Repeat for right hand gear assembly. Plug motor power cord into the opener.

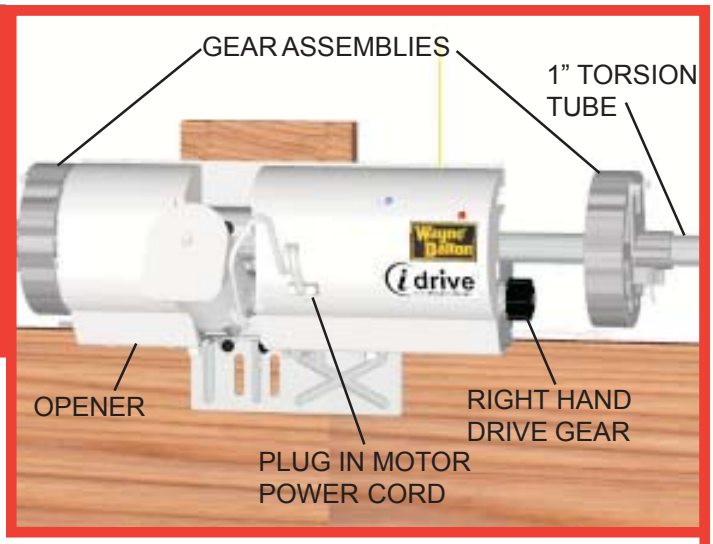

Step 4

Hand tighten the 3/8" square head bolt on the left hand gear assembly. Then with a wrench tighten 1 to 1-1/4 turns to set screw. Adjust the opener and left hand gear assembly so that there is a minimum 1/8" spacing between the opener and the left hand gear assembly. Now, adjust the right hand gear assembly, so that there is a minimum 1/8" spacing between opener and the gear. Tighten the 3/8" square head bolt in the same manner as above.

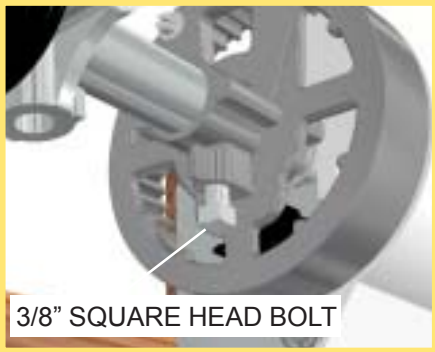

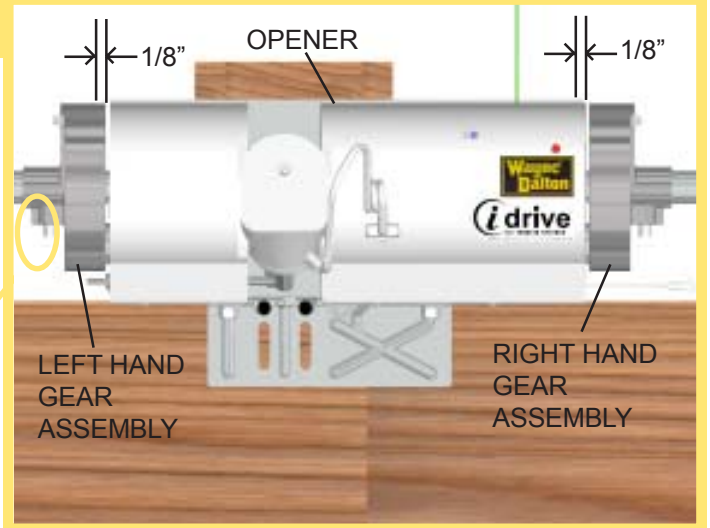

Step 5

Adjust the mounting bracket so that it fits flush with the header/ mounting support. Tighten the 5/16-18 nuts. Next, level the opener with the torsion tube and door. Near the cable drum, measure the distance from the torsion tube to the top of the door. This dimension must be the same at the opener point on the torsion tube to the door. Adjust the opener vertically (if necessary) to accommodate this. Mark a line under the mounting bracket when the torsion tube and top of door are parallel. Keeping the mounting bracket aligned with the line, secure the bracket to the mounting support by first pre-drilling the lag screw locations with 3/16" dia. bit and fastening with (2) 5/16" x 1-5/8" lag screws.

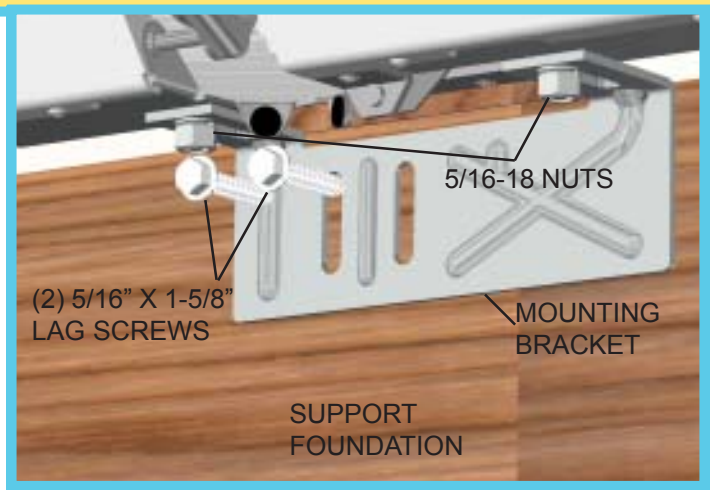

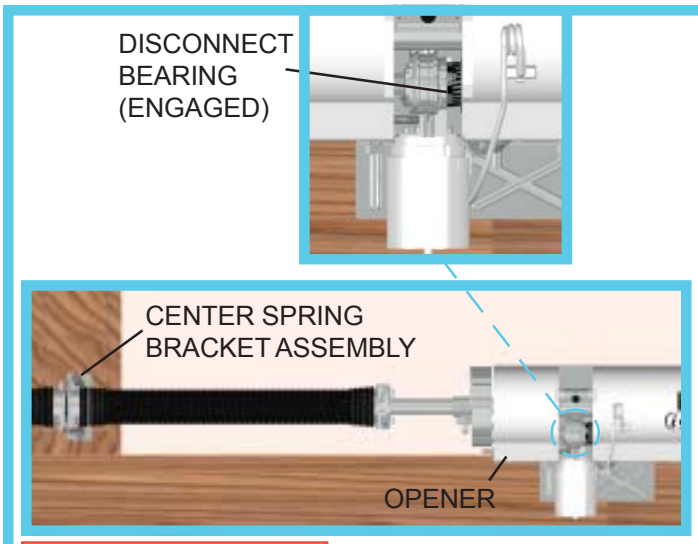

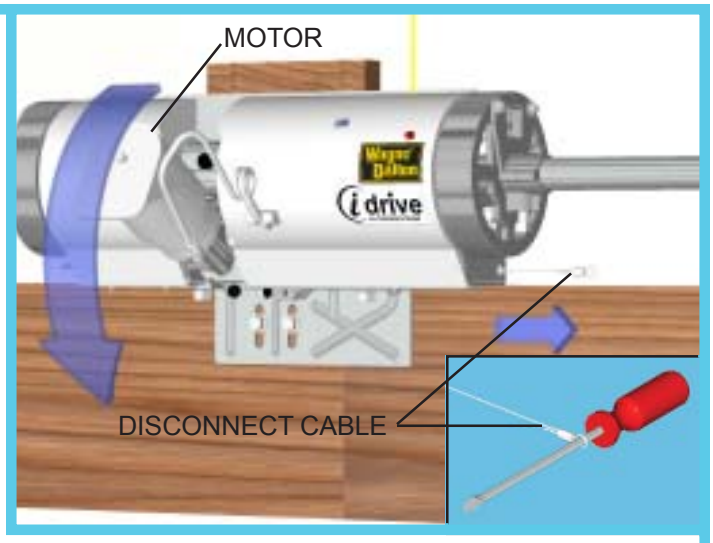

⚠WARNING WHEN LEVELING THE OPENER TO THE TORSION TUBE DO NOT MAKE ANY ADJUSTMENTS TO THE CENTER SPRING BRACKET ASSEMBLY. REMOVING ANY LAG SCREWS HOLDING THE SPRING BRACKET TO THE WALL MAY RESULT IN SEVERE OR FATAL INJURY. LEVEL THE OPENER BY SIMPLY MOVING THE UNIT UP OR DOWN VERTICALLY.

Pull on the disconnect cable that is located at the lower right hand side of the opener. **NOTE: The disconnect cable must be pulled straight out. The disconnect cable cannot be pulled at an angle.**

While holding the disconnect cable rotate the motor into the down position. Release the disconnect cable to allow the disconnect bearing to re-engage the motor assembly.

HELPFUL HINT: Insert a screwdriver through the cable loop, to use as a handle when pulling disconnect cable.

Step 6

Attach the loose disconnect cable, from the hardware kit, to the opener disconnect cable using the "S" hook provided. Close both ends of the "S" hook to lock the assembly together. Thread the cable guide bracket onto the disconnect cable making sure that the proper hole is used. For the 2-5/8" to 2-1/2" tube offset, use the hole closest to the flange. For the 3-3/8" tube offset, use the hole farthest from the flange.

NOTE: Depending on the type of door the opener is being installed onto, it may be necessary to drill a hole in the right side flagangle for routing the disconnect cable through.

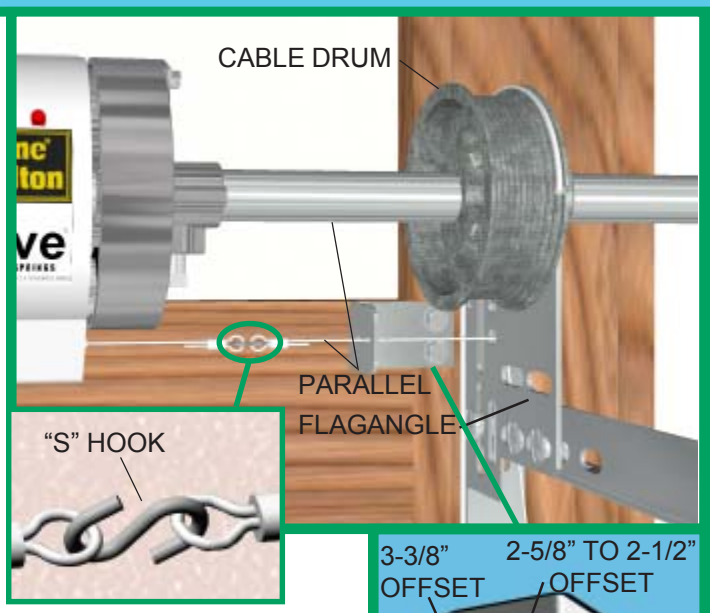

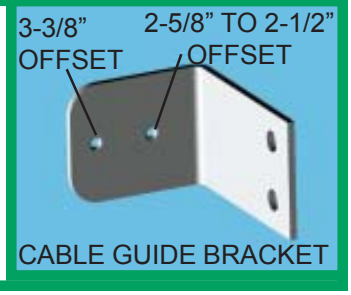

First locate the flange of the cable guide bracket just inside the cable drum. Align the cable so that it remains parallel to the torsion tube.

IMPORTANT! If cable is not aligned parallel to the torsion tube, the disconnect operation will not function properly.

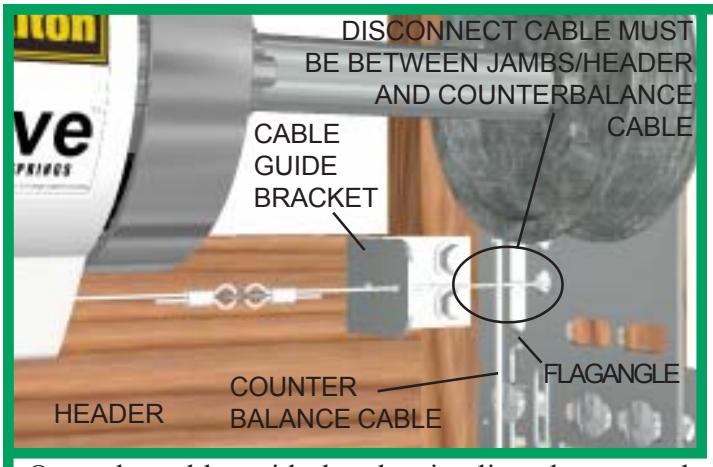

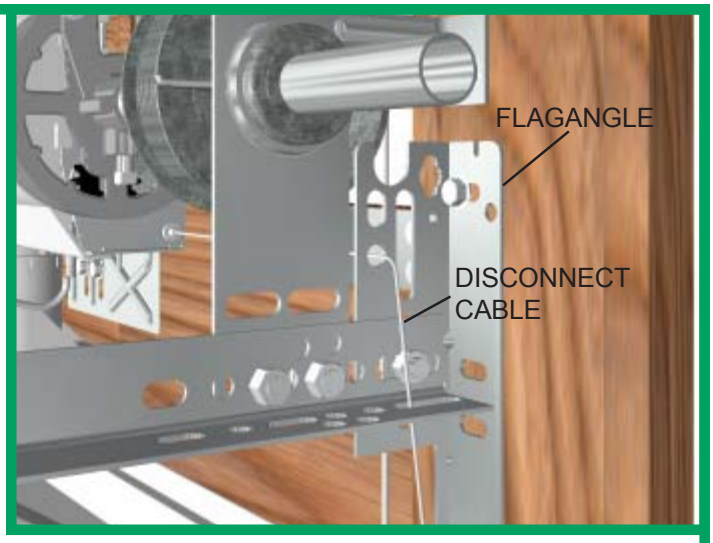

Once the cable guide bracket is aligned, secure the bracket to the jamb, using (2) 1/4 x 1-1/2" lag screws. **NOTE: It is recommended that 1/4" lag screw locations are pilot drilled using 1/8" drill bit. Disconnect cable must be routed behind the counterbalance cable and it must not rub on the counterbalance cable.** Route cable through the cable guide bracket, behind the counterbalance cable and through a convenient hole or slot in the flagangle. **IMPORTANT! Ensure that the disconnect cable is between the counterbalance cable and the header/jambs.** If there isn't a hole available, it may be necessary to drill a 1/8" diameter hole in the flagangle. Route cable through flagangle so that the disconnect cable is now hanging outside of the track.

Step 7

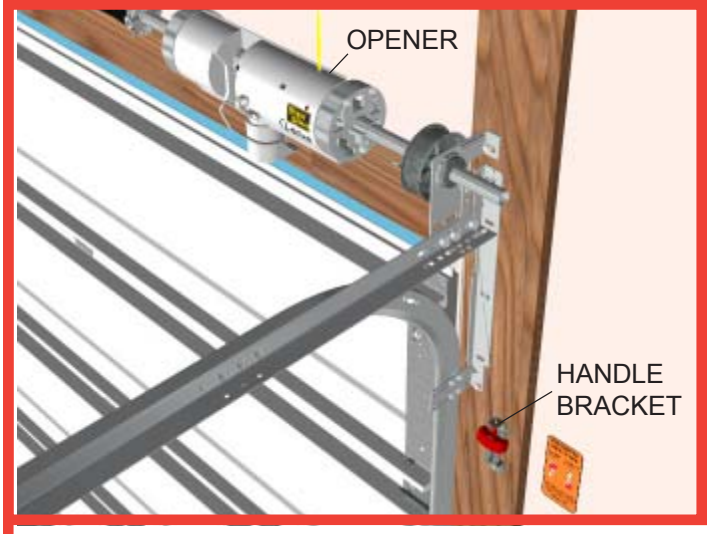

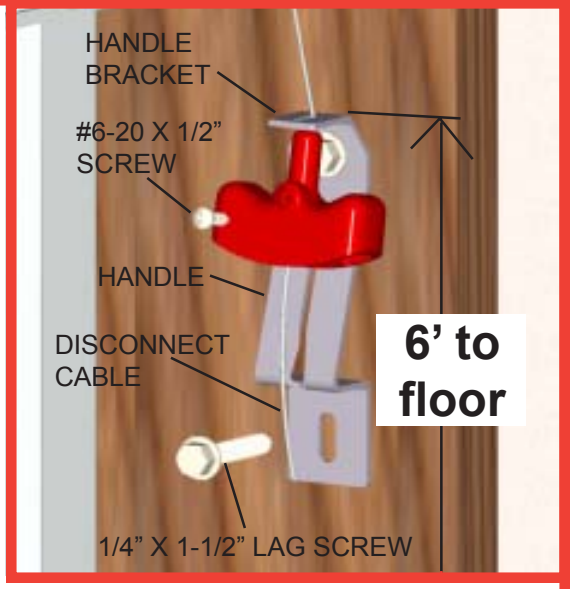

Mark a location on the right jamb, 6 feet above the floor to mount the handle bracket. Align top of the bracket with the mark. Fasten bracket to the jamb with (2) 1/4 x 1-1/2" lag screws. Start the #6-20 x 1/2"screw into the handle. Thread the disconnect cable through the top of the handle bracket and then the handle. Locate the handle in full upper position of handle bracket. Then remove all cable slack between the opener and the top of the handle bracket. Tighten #6-20 x 1/2" screw into the handle until snug, and then tighten screw an additional 1 to 1-1/2 turns to secure cable to handle. Trim off excess cable from bottom of the handle.

NOTE: It is recommended that 1/4" lag screw location be pilot drilled using 1/8" drill bit. CAUTION: Pull cable only enough to remove the cable slack. Pulling the cable more could cause opener to disconnect from the torsion tube.

Apply emergency disconnect label next to the mounted bracket. Use mechanical fasteners if adhesive will not adhere.

Step 8: Photoelectric Safety Sensor Installation

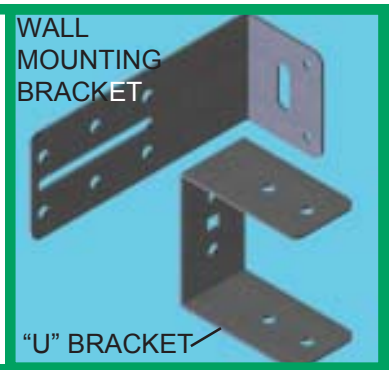

Select a mounting position no more than 5 inches above the floor to center line of wall mounting bracket. The sending and receiving units should be mounted inside the door opening to minimize any interference by the sun. However, the sensors should be mounted as close to the door track or inside edge of the door as possible to offer maximum entrapment protection. It is very important that both wall brackets be mounted at the same height for proper alignment.

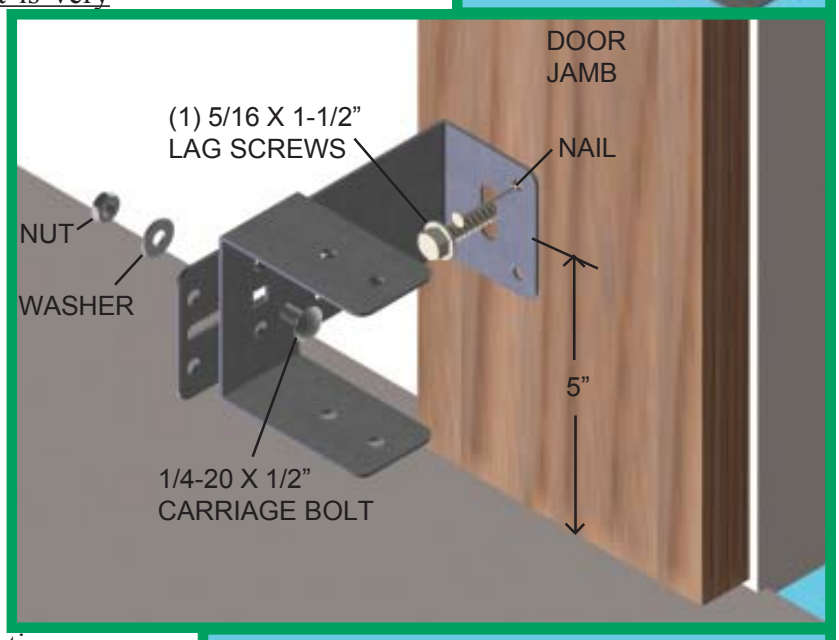

The brackets may be temporarily mounted to the jamb with a 1" flat head nail (provided) using the small hole above the slot. Using two 5/16 x 1-1/2" lag screw (provided), permanently mount the wall mounting brackets to both door jambs. In some installation it may be necessary to attach a wooden spacer to the wall to achieve the required clearance.

Attach the "U" brackets to the wall brackets with a 1/4-20 carriage bolt, washer and nut (provided). Insert the bolt from the inside of the "U" bracket and hand tighten only, at this time.

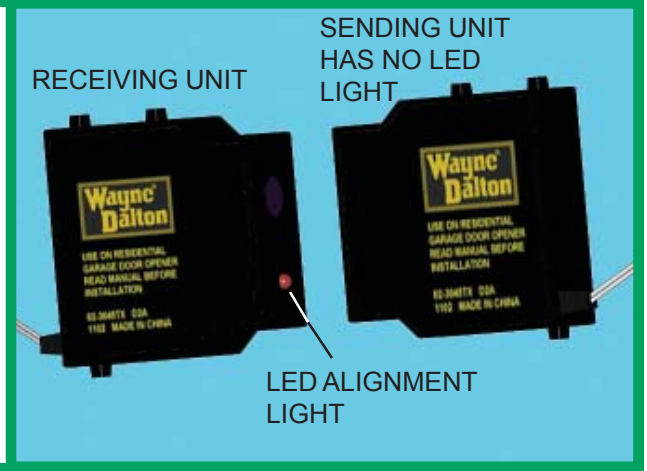

Identify which side of the garage door opening (if any) is "likely" to be exposed to sunlight. Since sunlight may affect photoelectric sensors, you should mount the sending unit (not the receiving unit) on the side of the door opening most exposed to the sun.

NOTE: If wires must be lengthened or spliced into prewired installation, use wire nuts or suitable connectors.

Attach the sending and receiving units to the "U" brackets by inserting their tabs into the respective holes.

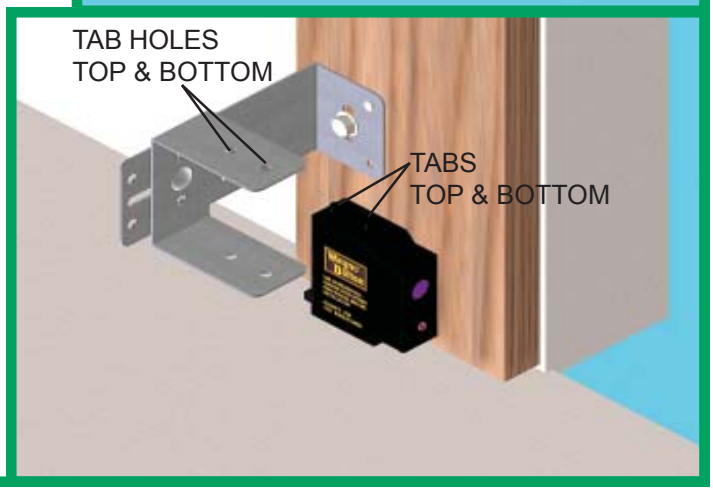

Photoelectric Safety Sensor Installation Continued

To locate the terminal block for the infrared sensor sender/receiver wires, you must first move the right hand gear assembly. Loosen the 3/8” square head bolt (refer to **Step 4**.) and slide the gear assembly away from the opener.

Uncoil wires from photoelectric sensors and route wires up garage wall and along door header towards the right side of the opener power head. Route wires behind torque tube and tack wires in place with insulated staples.

Connect photoelectric sensors to the opener power head terminal block on right side of the opener power head. Separate wire ends and strip about 1/2" of insulation off each of the wire ends. Insert a 3/32" max. width flathead screwdriver into the upper hole #1 of terminal block. Twist screwdriver to open wire clamp in lower hole #1 of terminal block. Insert both sender and receiver solid white wires into lower hole #1 until the wires bottom out and then release screwdriver tension. Insert both sender and receiver wires (white with black stripe) into lower hole #2 by the same process.

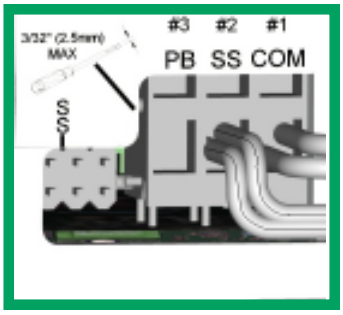

Keep the sender and receiver wires straight and organized by wrapping them around the backside of the opener and securing them using the cord clip (adhesive backed) provided.(Insure the surface the cord clip is attached to is clean and oil free).

IMPORTANT! Keep sender/receiver wires away from moving members.

NOTE: Reinstall the right hand gear assembly onto the drive gear. Ensure that the gear assembly is installed correctly (refer back to **Step 4**). Proceed to **Step 9**.

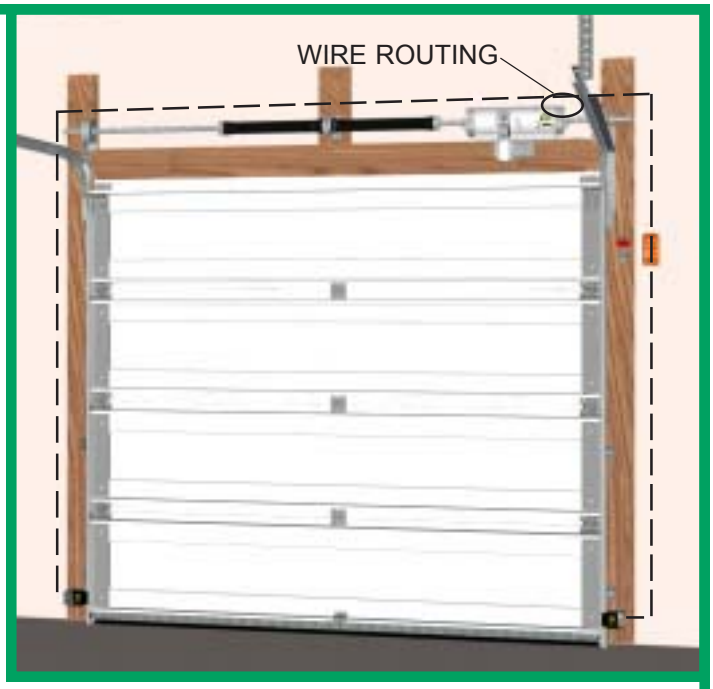

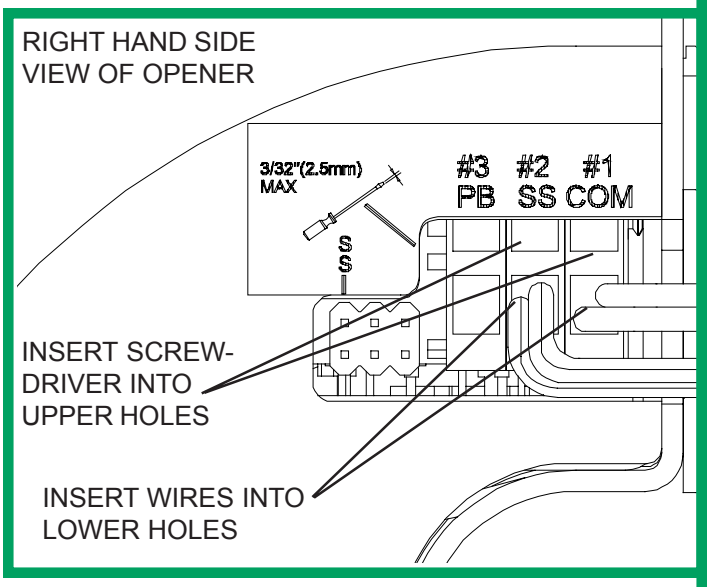

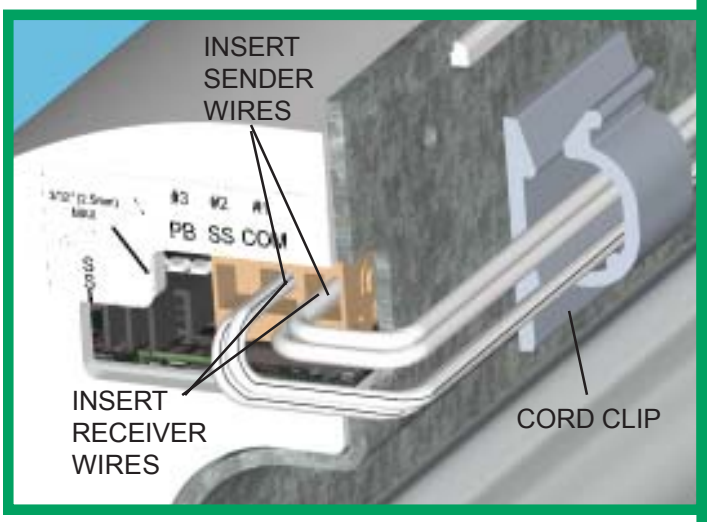

Pre-Operation Installation

Step 9: Wall Station Installation

⚠WARNING TO PREVENT POSSIBLE INJURY, INSTALL ALL WALL CONTROLS OUT OF THE REACH OF CHILDREN AND IN A LOCATION WHERE THE DOOR CAN BE SEEN BEFORE ACTIVATING. DO NOT MOUNT PUSH BUTTONS NEAR OR NEXT TO GARAGE DOOR.

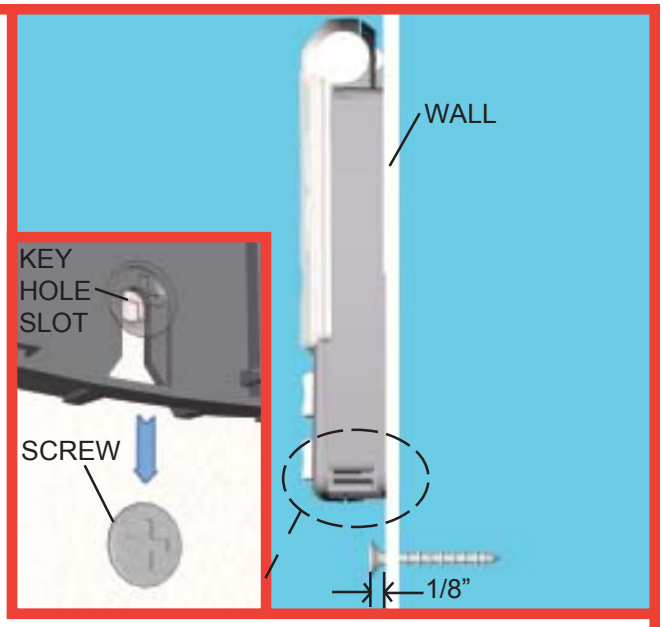

Select appropriate place to mount wall station. To keep wall station out of the reach of children, locate it at least five feet up from the floor. If possible, install on wood framing. If fastening into drywall or concrete, use anchors provided.

Using a 3/32" drill bit and the drilling template located on page 33, drill the two mounting holes. Drill 3/16” holes if using anchors. Install lower screw leaving 1/8" of the threads exposed. Slide wall station keyhole slot onto the lower screw. Wall station should slide onto screw, providing a snug fit. If necessary, remove wall station and loosen or tighten lower screw. Once wall station is fitted snuggly on lower screw, install upper screw. Do not over tighten.

CAUTION: Over tightening the upper screw could deform plastic case.

Battery Installation: Remove the battery cover completely (right-hand side of wall station) by disengaging the battery cover’s lower clip. Install two AAA batteries into the wall station observing the polarity, (+) and (-), of both batteries. After about five seconds, the Up/Down red LEDs will begin to blink momentarily every 1/2 second. Re-install the battery cover by first inserting its top into the wall station then inserting and securing its bottom. Apply entrapment label in convenient location next to the wall station.

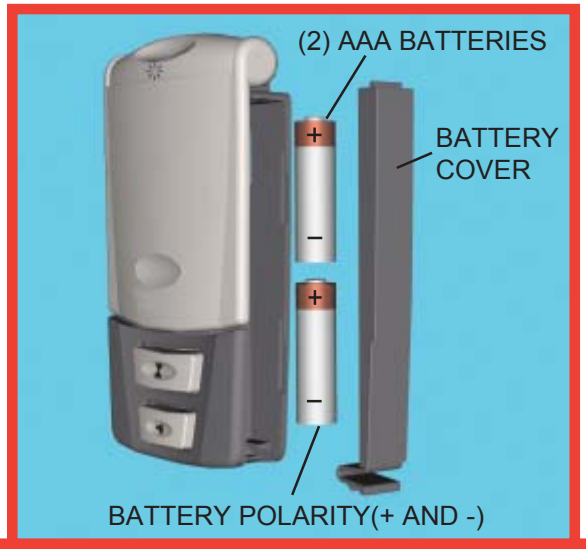

Step 10

⚠WARNING PRIOR TO INSTALLING CABLE KEEPERS, CHECK FOR BROKEN OR FRAYED COUNTERBALANCE CABLES. OPERATING A DOOR WITH BROKEN OR FRAYED CABLE(S), MAY RESULT IN A SEVERE OR FATAL INJURY. CONTACT A QUALIFIED DOOR SERVICE PERSON TO REPLACE BROKEN OR FRAYED COUNTERBALANCE CABLES.

⚠WARNING DO NOT ATTEMPT TO REMOVE OR LOOSEN BOTTOM BRACKETS IN ANYWAY. THEY ARE UNDER EXTREME SPRING TENSION AND CAN CAUSE SEVERE OR FATAL INJURY.

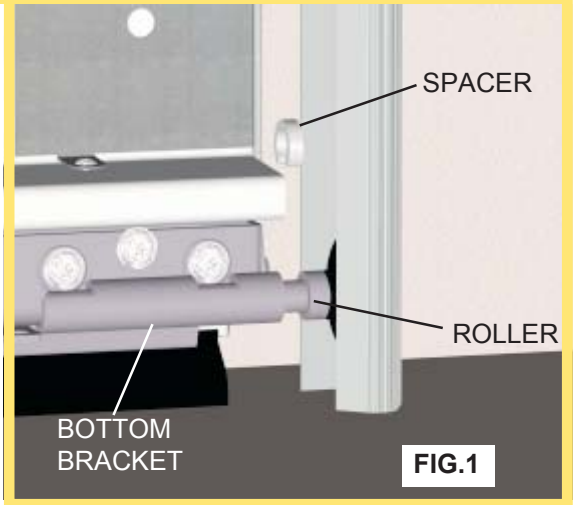

FIG.1

NOTE: The cable keeper must have a min. 1/2" clearance between the section and vertical track to function properly.

Push the spacer on to the roller shaft between the bottom bracket and roller (see **fig.1**). Use an additional spacer if needed to achieve min. 1/2" clearance. <u>If there is less than 1/2" clearance, loosen the lag screws attaching the track to the wall to provide additional clearance. After adjusting the track for the 1/2" clearance re-tighten the lag screws.</u>

IMPORTANT! Right and left hand is always determined from inside the building looking out.

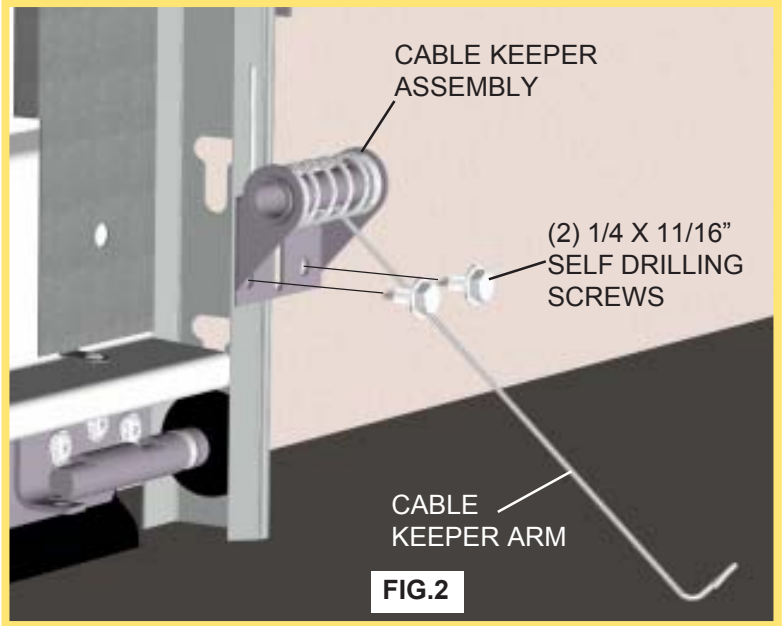

FIG.2

Attach the right hand (Black) cable keeper assembly to the bottom section directly above the bottom bracket (see **fig.2**). Position the cable keeper assembly so that it over hangs the edge of the section by 1/8" (see **fig.3**). Fasten with (2) 1/4 x 11/16" self drilling screws (wood doors will use (2) 1/4 x 1" lag screws).

NOTE: It is recommended that wood doors be pre drilled with an 1/8" pilot hole, prior to fastening.

Repeat for the left hand side (Red) cable keeper assembly.

Once the cable keeper assemblies are secured to the section, place the plastic sleeve over the cable and then rotate the arm upward and attach it to the plastic sleeve.

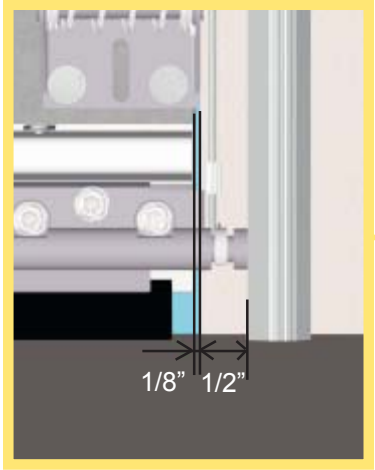

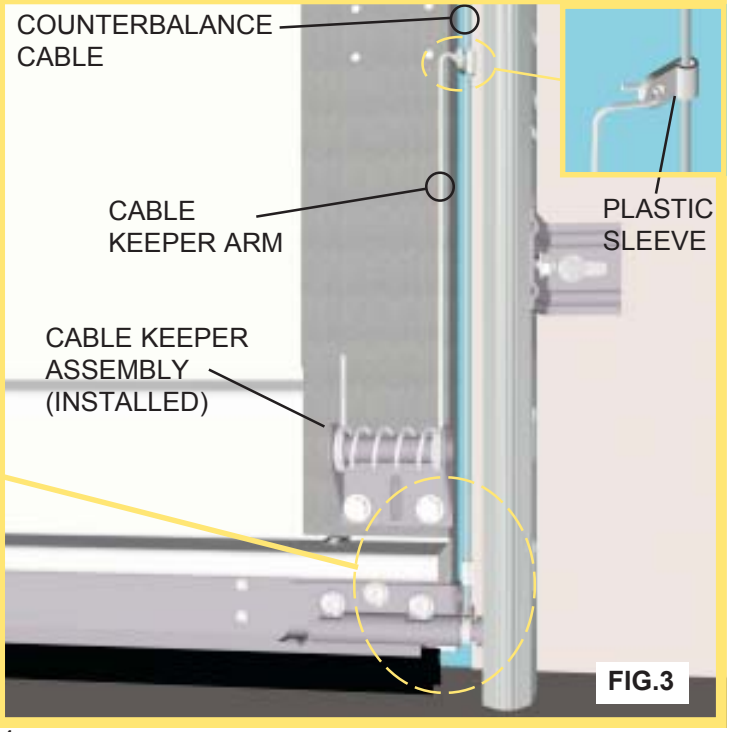

FIG.3

Step 11: Light Fixture Installation

The light fixture is designed to mount directly to a standard 120V duplex receptacle.

⚠WARNING TO REDUCE THE RISK OF ELECTRICAL SHOCK, THIS EQUIPMENT HAS A GROUNDING TYPE PLUG, THAT HAS A THIRD (GROUNDING) PIN. THIS PLUG WILL ONLY FIT INTO A GROUNDING TYPE OUTLET. IF THE PLUG DOES NOT FIT INTO THE OUTLET, CONTACT A QUALIFIED ELECTRICIAN TO INSTALL THE PROPER OUTLET. DO NOT CHANGE THE PLUG IN ANY WAY.

⚠WARNING TO AVOID ELECTRICAL SHOCK, DISCONNECT POWER TO THE RECEPTACLE AT THE FUSE/BREAKER BOX BEFORE PROCEEDING.

⚠WARNING DO NOT INSTALL THE LIGHT FIXTURE INTO A RECEPTACLE WITH A METAL FACEPLATE.

NOTE: Door must clear light fixture when the door is in the open position.

NOTE: RECEPTACLE COVER MUST BE INSTALLED IN-BETWEEN THE LIGHT FIXTURE AND THE CEILING

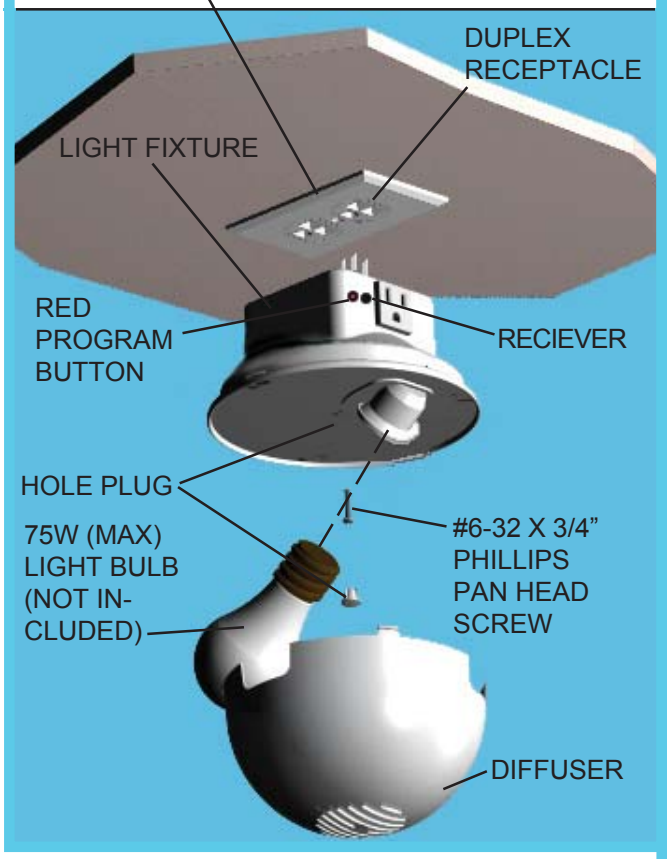

CEILING/WALL MOUNTING

Remove the center screw in the receptacle cover. Holding receptacle cover in place, insert light fixture into the receptacle that has the ground hole farthest from center screw hole. Remove center hole plug from light fixture to expose the screw hole. Secure light fixture to receptacle with a #6-32 x 3/4" phillips pan head screw. Replace hole plug into the screw hole in the light fixture. **NOTE:** For temperature protection, the hole plug must be in place prior to using the light fixture. Screw a maximum 75W light bulb into light socket and snap diffuser into light fixture.The light should blink one time when the power is re-established. **Turn receptacle power back on at fuse/breaker box.**

NOTE: An accessory power outlet receptacle (600 Watt Maximum) is provided on the light fixture.

NOTE: In order to program the light to the opener the installer must have the wall station already installed and programmed to the opener.

Step 12: Power Connection (Permanent Wiring Option)

Where required by local codes, the opener must be permanently wired. Services of a licensed electrician can be obtained to perform the following permanent wiring procedure.

⚠WARNING TO AVOID ELECTRICAL SHOCK, DISCONNECT POWER AT FUSE/ BREAKER BOX BEFORE PROCEEDING.

Using a phillips head screwdriver, remove the two screws from the right hand cover and unplug motor power cable. Remove right hand cover from the opener to expose electronics and wiring.

Remove the inlet connector, including its wires and discard. Install the hardwire plate provided, using (2) #6-25 x 1/4" screws provided.

Attach conduit, insert field wires and cut wires to allow an additional 6" of length. Strip off 3/4" of insulation from each wire. Install wires to the screw terminals on the circuit board with a 360 degree loop, as shown in lower left illustration. Black wire to BLK terminal, white wire to WHITE terminal and the green with yellow stripe wire to the frame with the provided #8 screw.

Position wiring as shown in the lower left illustration, keeping them to the left side of the circuit board.

Replace the right hand cover over the opener's electronics and secure with the two screws. Plug motor power cable into opener.

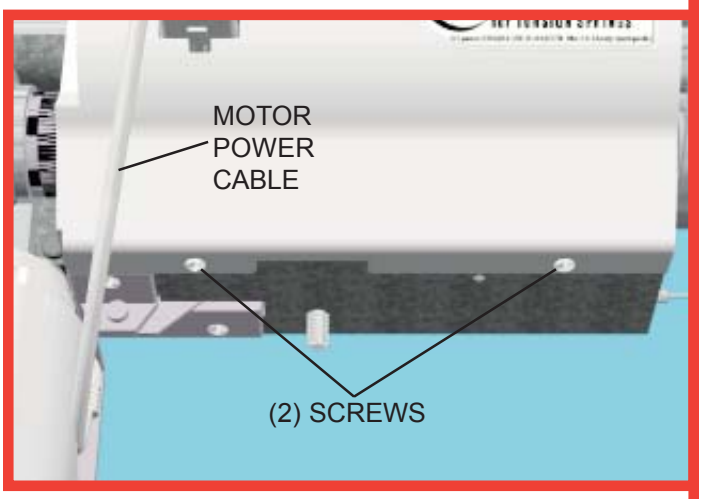

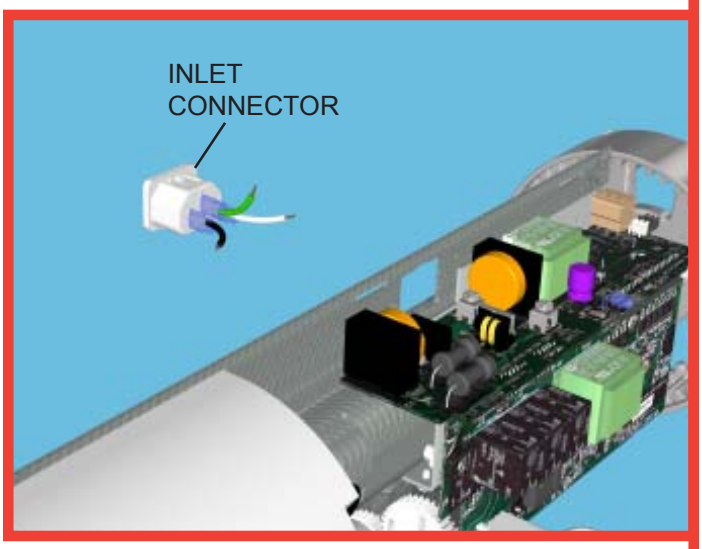

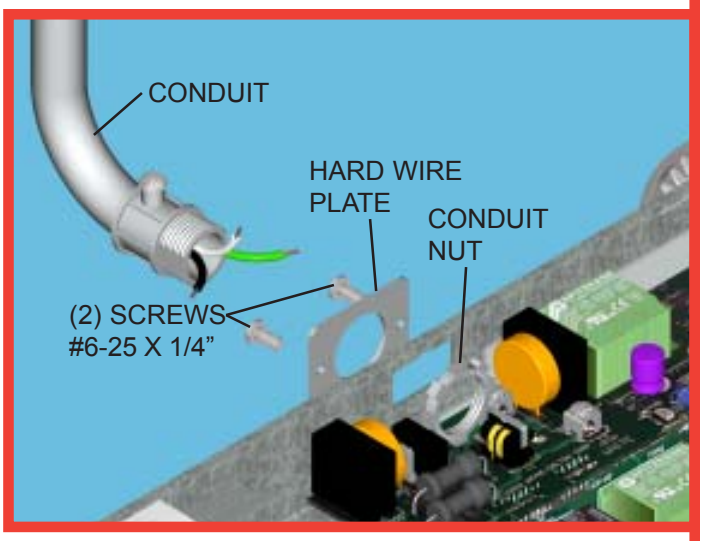

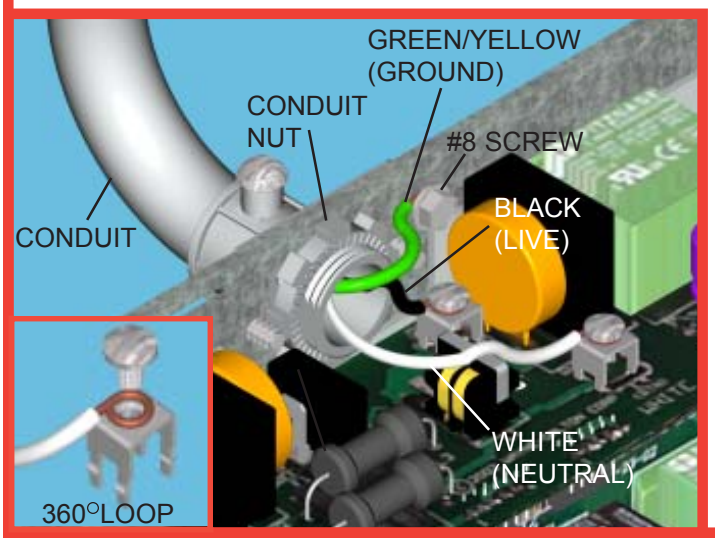

Step 13: Power Connection (Standard Wiring)

Plug the female end of power cord into the inlet connector on the back side of opener. Plug the other end of the opener power cord into the nearest convenient power receptacle. (If the power cord is not long enough to reach the closest receptacle, contact a service person for further options.) As soon as power is applied to the opener the opener will beep.

Excess power cord length must be routed and contained safely away from any moving members.

NOTE: Do not permanently attach power cord to building! Use only the flexible plastic clips supplied with the opener.

⚠WARNING TO REDUCE THE RISK OF ELECTRICAL SHOCK, THIS EQUIPMENT HAS A GROUNDING TYPE PLUG, THAT HAS A THIRD (GROUNDING) PIN. THIS PLUG WILL ONLY FIT INTO A GROUNDING TYPE OUTLET. IF THE PLUG DOES NOT FIT INTO THE OUTLET, CONTACT A QUALIFIED ELECTRICIAN TO INSTALL THE PROPER OUTLET. DO NOT CHANGE THE PLUG IN ANY WAY.

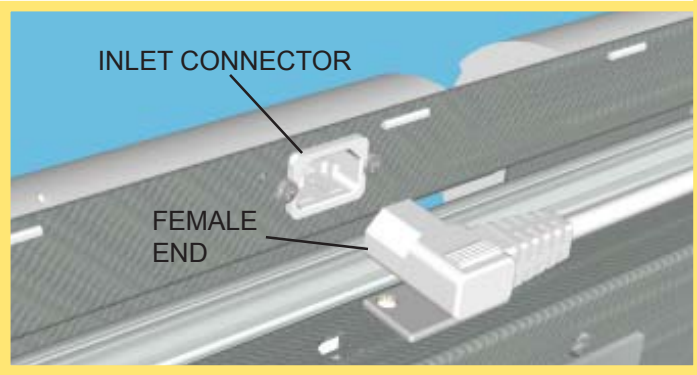

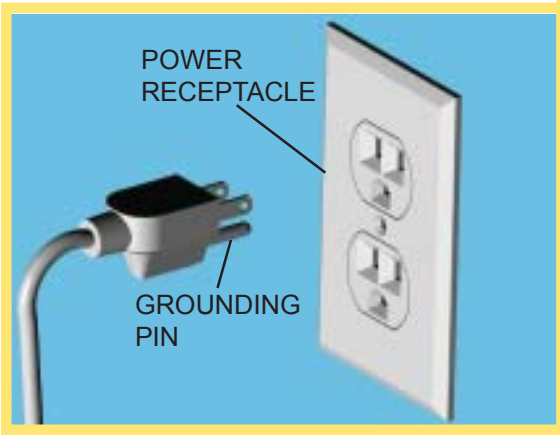

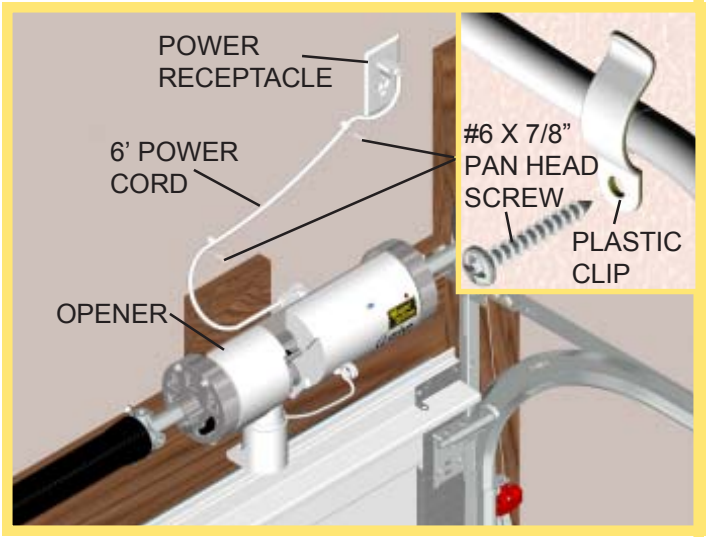

Step 14: Wall Station Activation and Programming

NOTE: The following steps describe the process to activate the Wireless Wall Station security code and programming Wireless Wall Station to the opener.
NOTE: The user must activate the wall station before using the wall station.

Wall Station Activation:
NOTE: Activation of the wall station is only necessary at installation and before first use of the wall station.
To activate wall station:
1. Press and hold the wall station's **Light** button. The Up/Down button red LEDs will blink rapidly.
2. After 2 seconds, the LEDs will turn on continuously indicating a successful activation. Release **Light** button. The wall station is now ready to be programmed to the opener.

Wall Station Programming:
To program wall station:
1. Verify the emergency disconnect handle is in the manual door operated position (lower position). This is for safety reasons.
2. On the front cover of the opener, press and release the red program button; the opener will beep once, indicating activation of the program mode. The opener will remain in program mode for 30 seconds.
3. Press and hold the wall station **light** button until the opener beeps one time. The wall station is now programmed.

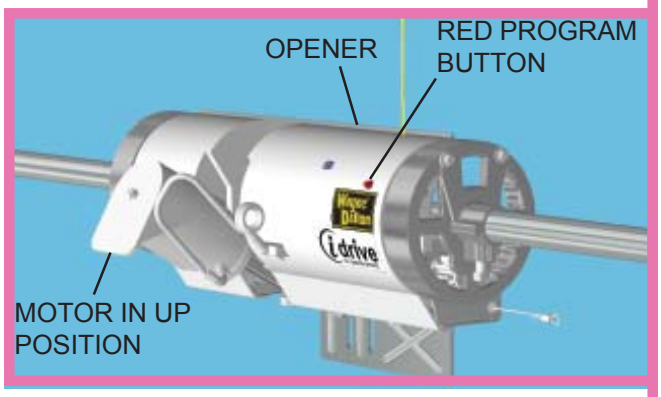

4. Return the emergency disconnect handle to the motor operated position (upper position).
No beeping response of the opener during the wall station programming indicates a programming failure. Repeat programming **Steps 1-4**.

NOTE: Programming failure can occur during the wall station programming if the remote control is too close to the opener during the programming sequence. Perform the programming with a minimum of six feet between the remote control and the opener.
NOTE: The first wall station command, after programming, will only move the door through a six-inch up cycle. Normal door operation will occur on the second usage of the wall station. The six inch door move cycle will not happen if the install routine has not been run.
NOTE: The opener can be activated by up to six remote control devices (including wall station, transmitter, and keyless entry devices). If a seventh control is programmed, the first of the programmed controls will be overridden and will no longer activate the opener.

HANDLE IN MANUAL OPERATED POSITION

HANDLE IN MOTOR OPERATED POSTION

CAUTION: For safety reasons, manually disconnect the opener from the door using the emergency disconnect handle prior to erasing remote controls. To clear programming of all remote control devices, press and hold the opener's program button for approximately ten seconds. When the opener beeps three times, all remote controls are erased.

Step 15: Program Light Fixture

1. Press the red program button on the light fixture. The LED on the light fixture will turn on and remain on for 30 seconds or until a Wall Station is learned. The incandescent lamp will also turn on when program button is pushed.

2. Press the Light Button on the Wall Station. This must be done within 30 seconds of pressing the program button on the light fixture. The light fixture lamp and LED will blink three times to indicate successful programming. The light fixture can now be turned on and off from this Wall Station and automatically turned on by the opener programmed to this Wall Station.

NOTE: A single opener can be programmed to activate multiple light fixtures if desired by repeating the above steps with additional light fixtures programmed to the desired opener.

NOTE: A single Light Fixture can be programmed to be activated by up to six openers. In other words a maximum of six openers can be learned by one light fixture.

To clear all Openers from a light fixture's memory press and hold the red program button on the light fixture for approximately 10 seconds until the LED and lamp starts blinking (six blinks).

At this point the light fixture is ready to set new programming.

Step 16: Install Routine

During install routine, the door will move up and down twice. Always keep a moving door in sight and keep people and objects away until it is completely closed. Pull the emergency disconnect handle to the manual door operated position (lower position). Manually raise the door to the full upward position. Then manually lower the door to the fully closed position. Make sure there are no obstructions in the path of the door. Return the emergency disconnect handle to the motor operated position (upper position).

WARNING THE OPENER SHOULD ONLY BE DISCONNECTED WHILE THE DOOR IS IN THE CLOSED (DOWN) POSITION. OTHERWISE, IN CASE OF WEAK OR BROKEN SPRING(S), THE DOOR COULD FALL, CAUSING SEVERE OR FATAL INJURY.

HELPFUL HINTS: Manually move the door slowly upwards after pulling the manual emergency disconnect handle. If there is interference between the top of the door and the opener's housing try repositioning the top roller bracket as far up as possible. The top roller brackets are located on the garage door top panel (closest to the ceiling). Loosen the nuts from the slider bracket (if present). Then, remove the screws holding the bracket to the door panel. Raise the top roller bracket and re-attach. Re-align the top roller in the track by moving the slider bracket until the door section meets the weather seal. Re-tighten nuts. Repeat for the other side.

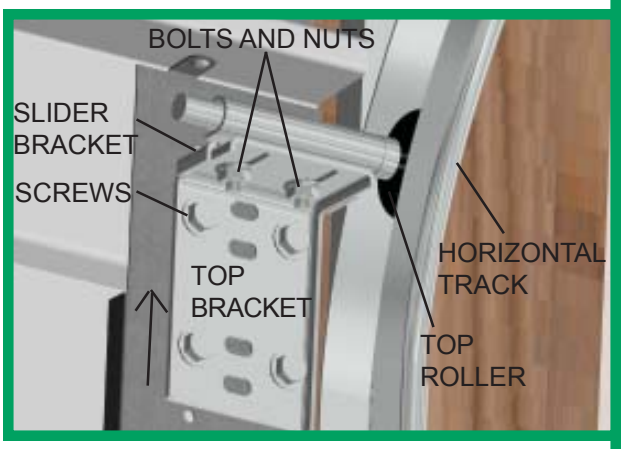

CAUTION: To avoid the top panel from falling, complete re-installation on one side before beginning the other.

NOTE: If no obstructions interfere with the door when manually opened and closed, proceed to **Step 16 a**. However, if an object such as a ceiling beam obstructed the door from opening completely, set a custom upper limit setting during the install routine, **Step 16 b**.

NOTE: The door must be in its fully closed position and the disconnect handle must be in the motor operated position (upper position) to initiate the install routine.

NOTE: Install routine will not run if infrared safety sensors are not aligned. (see **Step 20** for IR sensor alignment.)

WARNING TO AVOID INJURY, NO ONE SHOULD CROSS THE PATH OF A MOVING DOOR!

HELPFUL HINTS:

Step 16 a: Install routine with standard upper limit

Press and release the profile button. The opener will beep twice, indicating the activation of the install routine. The door will now move to the full open position and stop. Then, the door will close completely. Next, the door will go through one more up/down cycle. Once this is complete, the door limits are set and the installation is complete.

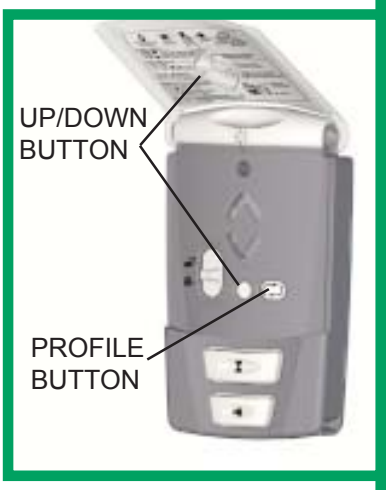

Step 16 b: Install routine with custom upper limit

Press and release the profile button. The opener will beep twice, indicating the activation of the install routine. When the door moves to the desired height, at least four feet off the ground, press the up/down button on the wall station. The door will stop and then close completely. Next, the door will go through one more up/down cycle. Once this is complete, the door limits are set and the installation is complete. Alternately: After an install routine has been completed, the door can be disconnected and manually moved to the desired upper limit. Reconnect door and initiate a new install routine from the new upper position.

Step 17: Detent Adjustment (if required)

IMPORTANT! - FOR SYSTEM SECURITY: The motor is designed to pivot down after the door closes completely. If the motor does not pivot or pivots too soon, the detent may need to be adjusted in order for the door lock feature to work properly. Proceed to next step: Detent adjustment.

IMPORTANT! Before making any detent pin adjustments, check the door balance. Door should not raise off the floor with spring tension alone, nor should it free fall from any open position.

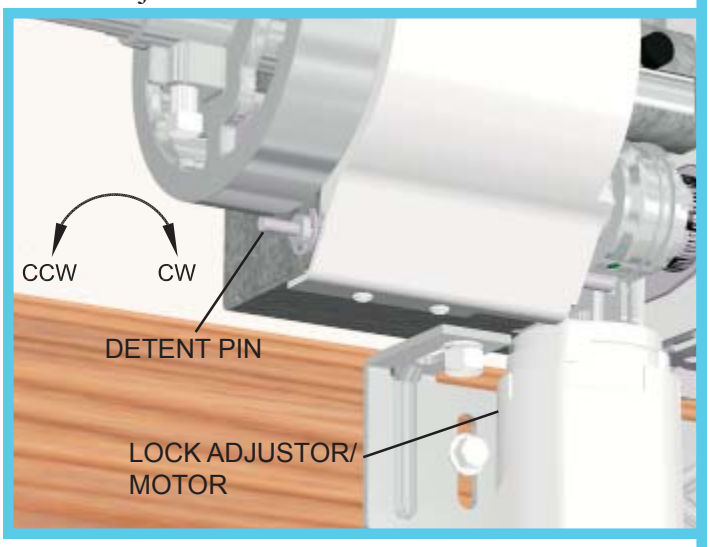

The amount of pressure the opener uses to pivot the motor downward is preset at the factory via the detent pin adjustment screw. Due to variations in door installations, a detent pin adjustment may need to be made with a flat head screwdriver in order for proper pivoting of the motor.

A.) If the motor does not pivot down, or only pivots down partially, the detent pin is set too hard. Using a flat head screwdriver, turn the detent pin COUNTER CLOCKWISE in 1/4 turn increments. Then operate the door to confirm adjustment. If the motor does not pivot on door closing adjust detent pin again. Repeat procedure until motor pivots to full down position when the door is completely closed.

B.) If the motor pivots down prematurely (before the door is completely closed) or if the motor is "slapping" too aggressively against the top of the door, the detent pin is set too soft. Using a flat head screwdriver, turn the detent pin CLOCKWISE in 1/4 turn increments. Then operate the door to confirm adjustment. If the motor pivots to soon, adjust detent pin again. Repeat procedure until motor pivots to full down position when the door is completely closed.

Step 18: Setting the Lock

The opener has built into it a means of locking the door when in the fully closed position. The motor cover is designed to act as an obstruction to the door while in the down position. The lock is adjustable to allow for proper interface with your door.

The lock ring and lock are assembled to the highest position. Once the door and opener have been installed and the opener has been programmed, the lock adjustor needs to be adjusted. Unscrew the lock adjustor until it is 1" from the top of the door. Once the lock is set at desired position, screw the lock ring down to the lock to prevent it from moving.

Disconnect opener and manually operate the door to confirm door clears the lock. Reconnect opener and cycle the door to make sure that the lock adjustor does not hit the door during the cycle sequence. Adjust the lock accordingly.

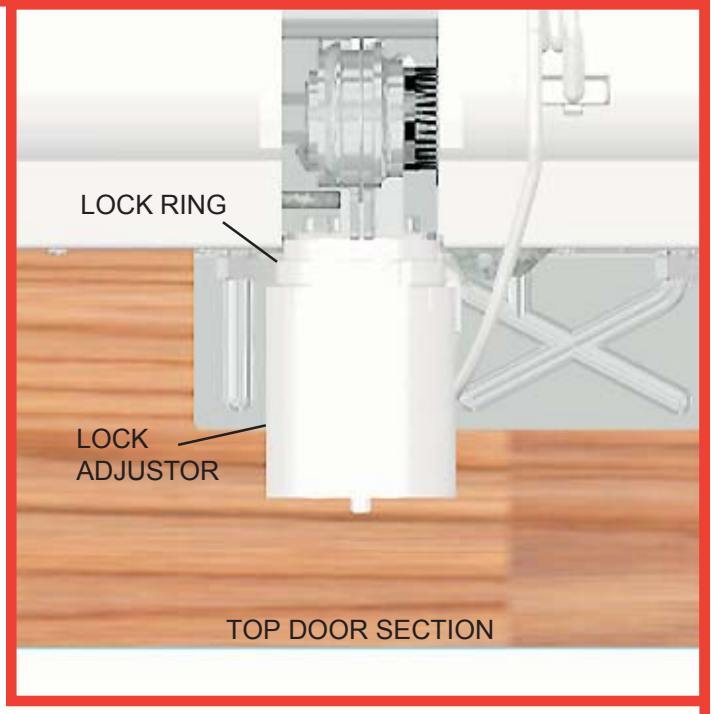

Step 19: Custom Settings

Custom pet position: Normal install routine sets the pet position to approximately eight inches above the ground. The pet opening height may be changed to open anywhere between 8” and 30” above the ground. To change the automatic pet opening height refer to the following procedure:

1. After completion of the normal install routine, with the door in the closed position, place the disconnect handle in the manual operated position.

Manually position the door to the desired pet opening height (between 8” and 30” above ground) and return disconnect handle to the motor operated position.

2. Move the slide switch from the NORMAL (Unlock) position to the DOOR LOCK (Lock) position and then back to the NORMAL (Unlock) position. The opener will beep once. The pet button is now programmed to automatically open the door to this custom height.

NOTE: The opener will NOT accept programmed pet lock position if door is below 8” or higher than 30”.

NOTE: Activation of the normal install routine will reset the pet position to the default eight inch target height. For use of the pet button see Operation section.

Step 20: Photoeletric Safety Sensor Alignment

IMPORTANT! - This infrared safety sensor sends an invisible beam of light from the sending unit to the receiving unit across the pathway of the door. The door opener will not operate until the safety sensor is connected to the power unit and properly aligned. If the invisible beam of light is obstructed, an open door cannot be closed by the transmitter or a momentary activation of the wall mounted push button. However, the door may be closed by holding your finger on the wall push button (constant pressure) until the door travels to a fully closed position. At this point you will be able to activate the opener; it will open, but will not close the door unless the sensors are aligned. The safety sensors can be aligned by moving the sending and receiving units in or out (see **Fig. 1**)until the alignment light on the receiving unit comes on. The 1/4-20 carriage bolt can be loosened to move the unit in or out, as required. If you have difficulty aligning beams, check that both brackets are mounted at the same height and remount if necessary. Additional minor adjustments can be made by lightly bending the mounting brackets (see **Fig. 2**).

⚠WARNING FAILURE TO MAKE ADJUSTMENTS COULD RESULT IN SEVERE OR FATAL INJURY.

Once the alignment light comes on, tighten all bolts and mounting screws. Finish securing all wire making sure not to break or open any of the conductors. Loop and secure any extra wire. Now, using the wall station’s up/down button, activate the opener and check that it will operate through full open and close cycles.

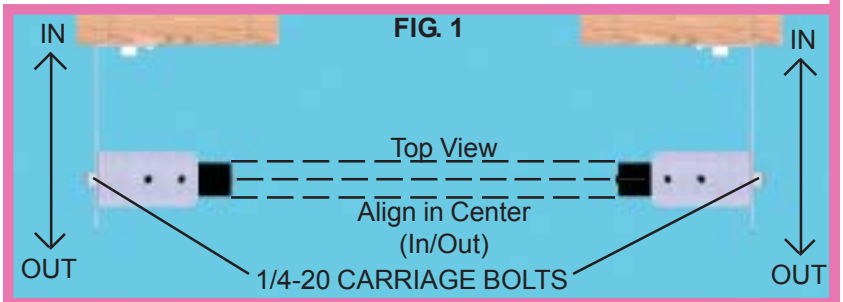

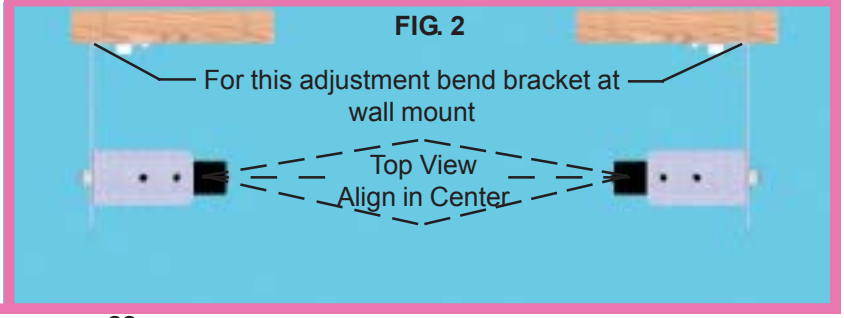

Step 21: Photoelectric Obstruction Sensor Test

Starting with the door in the fully open position, place a 6" high object on the floor progressively one foot from the left side of the door, center of door and one foot from the right side of the door. In each position, activation of the opener with the wallstation up/down button should cause the door to move no more than one foot, stop and then reverse to fully open position.

The same 6" high object when placed on the floor, while door is closing, should also cause the door to reverse.

⚠WARNING WHEN PERFORMING THIS PART OF THE TEST, DO NOT PLACE YOURSELF UNDER DESCENDING DOOR, OR SEVERE OR FATAL INJURY MAY RESULT.

⚠WARNING IF THE OPENER DOES NOT RESPOND PROPERLY, OR FAILS THESE TEST, HAVE A QUALIFIED SERVICE PERSON MAKE NECESSARY ADJUSTMENTS/REPAIRS. FAILURE TO MAKE ADJUSTMENTS COULD RESULT IN SEVERE OR FATAL INJURY.

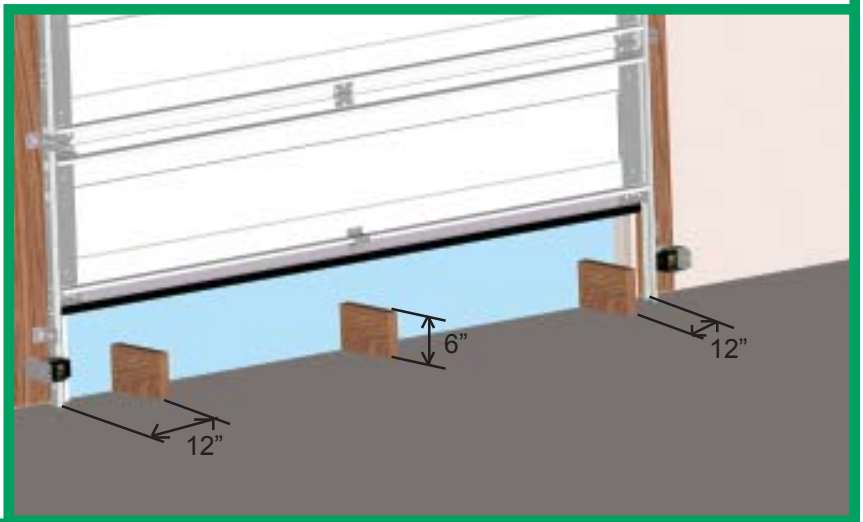

Step 22: Contact Obstruction Test

After installing the opener, the door must reverse when it: contacts a 1-1/2" high object (or a 2 x 4 board laid flat) on the floor. To verify proper operation:

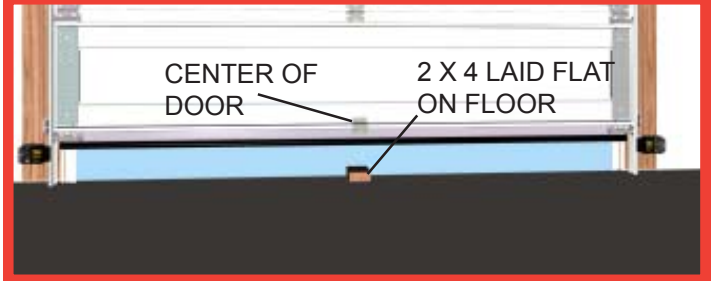

1. Using the wallstation, activate the door to the fully open position .

2. Place a 2 x 4 board laid flat on the garage floor under the door path.

3. Activate the door to the closed position with the wallstation. Upon contacting the 2 x 4 board, the door should stop, then reverse direction within two seconds and travel to the full open position. If the door does not respond to the required tests, repeat install routine making sure the door is in the fully closed position prior to activation.

If problem persists contact Wayne Dalton Customer Service (888) 827-3667

⚠WARNING IF OPENER DOES NOT RESPOND PROPERLY AND FAILS EITHER OF THE TWO TESTS (STEP 21 AND 22), DOOR MAY CAUSE A SEVERE OR FATAL INJURY. HAVE A QUALIFIED SERVICE PERSON MAKE NECESSARY REPAIRS.

Step 23: Transmitter Activation and Programming

TRANSMITTER ACTIVATION:

NOTE: Activation of the transmitter is only necessary at installation and before first use of the transmitter.

To activate transmitter:

1. Press and hold the transmitter's **Large** button. The red LEDs will blink rapidly.

2. After 2 seconds, the red LEDs will turn on continuously indicating a successful activation. Release **Large** button. The transmitter is now ready to be programmed to the opener.

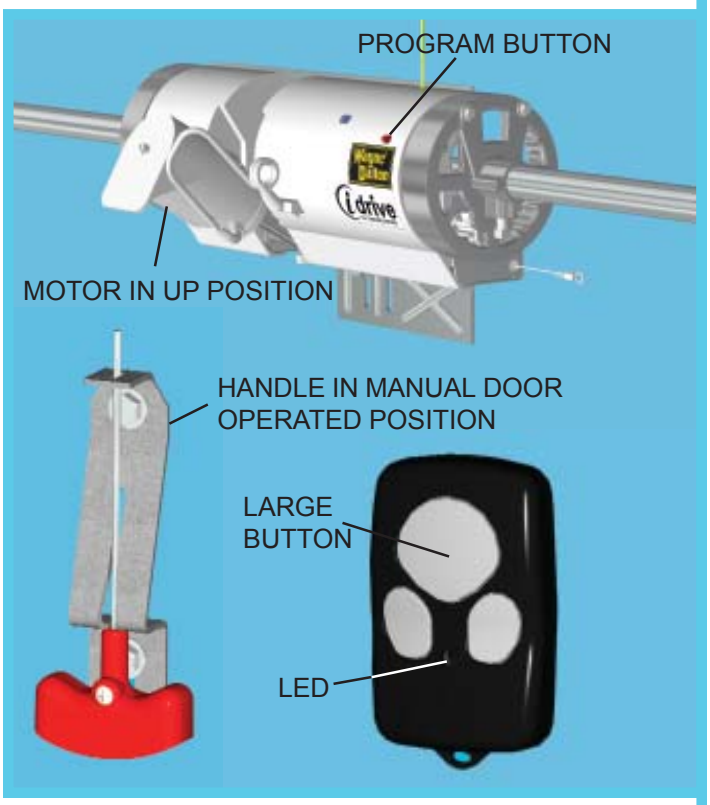

TRANSMITTER PROGRAMMING:

To program transmitter:

1. Place the emergency disconnect handle in the manual door operated position. This is for safety reasons.

2. On the front cover of the opener, press and release the red program button; the opener will beep once, indicating activation of the program mode. The opener will remain in program mode for 30 seconds.

3. Press and hold the desired transmitter button until; the opener beeps once. The transmitter is now programmed.

4. Return the emergency disconnect handle to motor operated position.

NOTE: No beeping response of the opener during the transmitter programming indicates a programming failure. Repeat programming 1-4.

NOTE: Programming failure can occur during the transmitter programming if the remote control is too close to the opener during the programming sequence. Perform the programming with a minimum distance of six feet between the remote control and the opener.

NOTE: The first transmitter command, after programming, will only move the door through a six-inch up cycle. Normal door operation will occur on the second usage of the transmitter.

NOTE: The opener can be activated by up to six remote control devices (including wall station, transmitter, and keyless entry devices). If a seventh control is programmed, the first of the programmed controls will be overridden and will no longer activate the opener.

CAUTION: For safety reasons, manually disconnect the door from opener using the emergency disconnect handle prior to erasing remote controls. To clear programming of all remote control devices, press and hold the opener's program button for approximately ten seconds. When the opener beeps three times, all remote controls are erased.

NOTE: If there are any accessories included with your opener, install them per their instructions at this time.

Step 24: Programming HomeLink™ to the Torsion iDrive™

NOTE: This step can only be done on automobiles equipped with the HomeLink™ System.

CAUTION:
During programming, the garage door may operate. Pull the emergency disconnect handle to put the operator in the manually operated position. Make sure people and objects are out of the way of the moving door to prevent potential harm or damage.

NOTICE: Programming Homelink™ requires a Wayne-Dalton transmitter that is programmed to the Torsion iDrive™ per **Step 23**.

ATTENTION:
Use the programming instructions provided with your vehicle first. Follow these instructions if the HomeLink™ unit does not learn the transmitter.

PROGRAMMING

Training HomeLink™ Unit

1. Pull the emergency disconnect handle to the manually operated position.
2. Press and hold the two outside buttons on the HomeLink™ unit for approximately 20 seconds until the HomeLink™ light begins to flash (approx. 1 flash per second), then release both buttons. (Do not perform this step to train additional hand-held transmitters.) Note that this operation erases all previously learned transmitters and that you need to re-teach any other transmitters to your HomeLink™ unit by repeating steps 3 - 6 below.
3. Hold the end of the Wayne-Dalton® hand-held transmitter approximately 1 to 3 inches away from the HomeLink™ surface – keeping the HomeLink™ indicator light in view.
4. Press and hold the Wayne-Dalton hand-held transmitter's large center button. The transmitter's red LED indicator will turn on. After 10 seconds the red indicator (LED) will begin to blink rapidly. Continue to hold the button pressed.
5. While still holding the Wayne-Dalton transmitter button (red indicator blinking rapidly), immediately press the desired HomeLink™ button. Keep pressing the buttons until step 6 has been completed.
6. The HomeLink™ indicator light will be blinking during the training operation. When the HomeLink™ indicator light flashes rapidly or turns off (approx. 5 to 60 seconds), both buttons may be released. The HomeLink™ light flashing rapidly or turning off indicates successful programming of the new frequency signal.

Teaching Power Unit

7. Now press the PROGRAM SWITCH button located on the *i*drive™ opener. The *i*drive™ unit will beep, indicating that it is ready to learn.
8. Now press the HomeLink™ button used in Step 5 above for 1 to 3 seconds. *i*drive™ will beep once indicating a successful learn.
9. Return the emergency disconnect handle to the motor operated position.
10. Press the HomeLink™ button once more to operate the door. The first door operation after programming will only move the door through a six inch up. Normal door operation will follow.

Operation:

Important Safety Instructions

⚠WARNING TO REDUCE THE RISK OF SEVERE OR FATAL INJURY:

1. READ AND FOLLOW ALL INSTRUCTIONS.
2. Never let children operate or play with the door controls. Keep remote controls away from children.
3. Always keep a moving door in sight and keep people and objects away until it is completely closed. **NO ONE SHOULD CROSS THE PATH OF A MOVING DOOR.**
4. NEVER GO UNDER A STOPPED, PARTIALLY OPEN DOOR.
5. Test the door opener monthly. The garage door MUST reverse on contact with a 1-1/2 inch high object (or a 2 x 4 board laid flat) on the floor. After adjusting the limit of travel or profiling (install routine) retest the door. Failure to adjust the opener properly may cause severe or fatal injury.
6. When possible, use the emergency disconnect only when the door is in the closed position. Use caution when using the emergency disconnect when the door is open. Weak or broken spring(s) may allow the door to fall rapidly, causing a severe or fatal injury.
7. KEEP THE GARAGE DOOR PROPERLY BALANCED. See the owner's manual included with the door. An improperly balanced door could cause a severe or fatal injury. Have a qualified service person make repairs to the cables, spring assemblies, and other hardware.
8. SAVE THESE INSTRUCTIONS.

Door activation: Upon activation by either the wall station up/down button or transmitter, the door will move in the following manner:
1. If closed, the door will open. If open completely, the door will close. If partially open, the door will open.
2. If closing, the door will stop, reverse, and return to the open position. Next activation will close the door.
3. If opening, the door will stop. Next activation will open the door.
4. If an obstruction is encountered or an out-of-balance condition is detected while the door is closing, the door will reverse, return to the open position, and the opener will beep (3) or (4) times. The next activation will close the door.
5. If an obstruction is encountered or an out-of-balance condition is detected while opening the door, the door will stop. The next activation will open the door.
6. When door is in motion any button on the wall station functions the same as the up/down button.

⚠WARNING NEVER LET CHILDREN OPERATE OR PLAY WITH THE DOOR CONTROLS. KEEP REMOTE CONTROLS AWAY FROM CHILDREN. FATAL INJURY COULD RESULT SHOULD A CHILD BECOME TRAPPED BETWEEN THE DOOR AND THE FLOOR.

⚠WARNING ALWAYS KEEP A MOVING DOOR IN SIGHT AND KEEP PEOPLE AND OBJECTS AWAY UNTIL IT IS COMPLETELY CLOSED. TO PREVENT A SEVERE OR FATAL INJURY, AVOID STANDING IN A OPEN DOOR WAY OR WALKING THROUGH THE DOORWAY WHILE THE DOOR IS MOVING.

Transmitter Operation:

Momentarily pressing the large transmitter button or the button programmed in the transmitter programming step activates the door. Other buttons can also be programmed to activate different doors, for multi-door installations. Each button or a combination of two buttons pressed simultaneously can be programmed to activate a different door. Only one button at a time can be programmed to activate a specific opener. The transmitter LED will light while any transmitter button remains pressed.

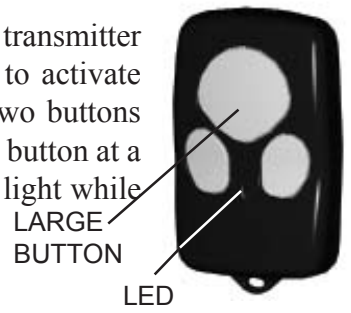

NOTE: Refer to **Step 23** for transmitter programming instructions.

HOW TO OPERATE THE WIRELESS WALL STATION

WARNING TO PREVENT POSSIBLE INJURY, NEVER LET CHILDREN OPERATE OR PLAY WITH DOOR CONTROLS. KEEP REMOTE CONTROL AWAY FROM CHILDREN.

Momentarily pressing the **Up/Down** button starts or stops door movement or changes door's direction. Press and hold **Up/Down** button during the door's complete downward travel to override photo eye safety sensors.

Momentarily pressing the **Light** button turns on the light fixture. The light will remain on until either the **Light** button is pressed again or the door is activated. The light automatically turns on with a door activation and remains on for five minutes thereafter. Pressing the **Light** button before the five minutes has elapsed will turn off the light fixture. While the door is in motion, the **Light** button functions identical to the Up/Down button, stopping or reversing the door immediately.

Momentarily pressing the **Timer** button causes a delayed activation of a stationary fully open door. The opener will beep on and off for about 10 seconds prior to closing the door, allowing enough time to exit the garage when the opener is in the timer mode. Pressing any button, except for the Profile button while the opener is beeping or the lamp is blinking cancels the timer mode.

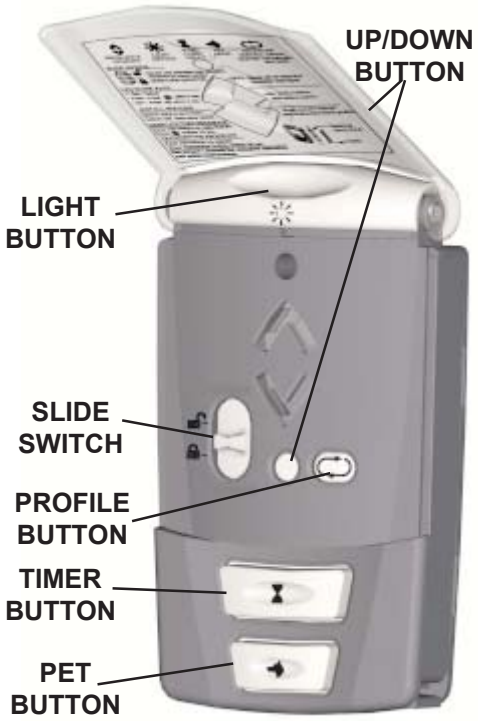

NOTE: The timer feature will only function with the door in the full open position. Pressing the Timer button with a stationary door in any other position will cause the opener to beep four times and the door will not be activated.

While the door is in motion, the **Timer** button functions identical to the Up/Down button, stopping or reversing the door immediately.

Pressing the **Pet** button opens a closed door to a preset position between eight and thirty inches above the floor, allowing pets to enter and exit the garage without the door being fully open. The door must be fully closed to activate the pet open feature. Pressing the **Pet** button with a stationary door in the pet open position will cause the door to close. Pressing the Up/Down button while the door is in the pet position will cause the door to open. While the door is in motion, the **Pet** button functions identically to the Up/Down button, stopping or reversing the door immediately. The pet feature allows for custom setting of the pet position door height. Refer to the opener's manual for complete **Pet** button instructions and programming. See **Step 19: Custom Settings.**

NOTICE: A door in the "pet position" (open 8-30 inches) is not locked and should not be considered to be in a secured door position.

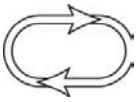

Press and release the **Profile** button to intiate the "Install Routine". Refer back to **Step 16** for complete Install Routine instructions and functions.

NOTE: The wall station's arrow LEDs will light while any wall station button remains pressed.

HOW TO OPERATE THE WIRELESS WALL STATION (CONTINUED)

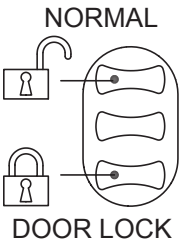

The **slide switch** has two positions: **Normal, and Door lock** (Disable RF).

Normal position:
Move the **slide switch** to **Normal** position for all normal functions of the opener. The **Normal** position will cancel the **Door Lock** feature.

NOTE: Keep the slide switch in the Normal position unless you have fully read and understood the Door Lock setting and you desire to use this setting.

Door Lock position:
If the door is stopped (fully open, fully closed or partially open) move the **slide switch** to the **Door Lock** position to suspend all normal functions of the opener. The opener will remain completely disabled and non-operational in this mode. All wall stations, transmitters and keyless entry units are ignored until the **slide switch** is moved to the **Normal** position.

If the door is moving when the slide switch is moved to the **Door Lock** position, the **Door Lock** mode is not activated and all functions of the opener remain active.

Backlit LED Lights:
The Up/Down button backlit red LEDs blink intermittently often to help you locate the wall station in a dark garage. This blink rate can be changed for longer battery life or can be turned off. The default blink rate is one blink every one second.

NOTE: The wall station's Up/Down arrow LEDs will light while any wall station button remains pressed.

For longer battery life the blink rate can be changed to blink once every two seconds. To change the blink rate, remove the battery cover and remove one battery. Re-install the battery and within 2 seconds, press the **Light** button. Re-install the battery cover.

For longest battery life, the blink can be turned off. To turn off the blink, remove the battery cover and remove one battery. Re-install the battery and within 2 seconds, press the **Pet** button. Re-install the battery cover.

⚠WARNING KEEP THE GARAGE DOOR PROPERLY BALANCED. AN IMPROPERLY BALANCED DOOR COULD CAUSE A SEVERE INJURY. HAVE A QUALIFIED SERVICE PERSON MAKE REPAIRS TO CABLES, SPRING ASSEMBLIES, AND OTHER HARDWARE.

⚠WARNING THE EMERGENCY DISCONNECT SHOULD ONLY BE USED WHEN THE DOOR IS CLOSED. USE EXTREME CAUTION IF OPERATING THE EMERGENCY DISCONNECT ON AN OPEN DOOR. WEAK OR BROKEN SPRING(S) MAY ALLOW THE DOOR TO FALL RAPIDLY, CAUSING A SEVERE OR FATAL INJURY.

The opener is equipped with an emergency disconnect that allows the door to be moved manually and independent from the opener.

With the door closed, pull down on the disconnect handle and place the handle under the lower section of the handle bracket. This motion causes the motor on the opener to pivot upwards and the opener to disconnect from the torsion tube.

Releasing the disconnect handle from the lower section on the handle bracket and returning the handle to its original position will reconnect the opener to the torsion tube.

NOTE: The motor will not pivot down completely when the handle is released. After one motorized up/down door cycle, the motor will once again pivot down, and all cable slack will be taken up. The garage door is not locked, secure from forced entry, until the motor is back in the down position.

MOTOR DOWN POSITION (DOOR LOCKED)

DISCONNECTED, MOTOR UP POSITION

Disconnect Label: The label is located next to the disconnect handle. The adjacent view shows the handle in both the motor operated and manual operated positions. View on the left side of the label shows the handle position when the opener is engaged to the torsion tube. The view on the right side of the label shows the handle when the opener is disconnected from the torsion tube.

NOTE: Use extreme caution if disconnecting. The emergency disconnect should not be used when the door is in the open position. Weak or broken spring(s) may allow the door to fall rapidly causing a severe or fatal injury.

Maintenance:

Monthly Maintenance:

1. With door fully closed, manually operate the door with the emergency disconnect in the manual door operated position. If the door feels unbalanced or binds, have a qualified service person repair or make adjustments to the door.

2. Perform the contact/obstruction tests. See **Step 21 & 22** for the contact/obstruction test instructions. Inability to activate a door using the transmitter or wall station may be caused by a weak or dead battery. Press and hold the activation button on either the transmitter or the wall station. If the LED does not light, this is an indication that the battery is weak or dead. Replace the battery.

NOTE: Dispose of dead batteries properly.

Battery replacement for wall station:
Remove the battery cover completely (right-hand side of wall station) by disengaging the battery cover's lower clip. Install two AAA batteries into the wall station observing the polarity, (+) and (-), of both batteries. After about five seconds, the Up/Down red LEDs will begin to blink every one second. Re-install the battery cover by first inserting its top into the wall station then inserting and securing its bottom.

Battery replacement for transmitter:
Insert a coin in the coin slot of the transmitter and twist coin to access the dead battery. Replace the battery, being careful to match the positive (+) symbols on the circuit boards with the battery.

NOTE: Use only two AAA batteries.

NOTE: Some transmitters use two CR2016 or equivalent batteries while others use a single MN21 or equivalent battery.

Troubleshooting

SYMPTOM	PROBABLE CAUSE	CORRECTIVE ACTION
Opener does not respond to the wall station or transmitter?	No power to the opener. Controls are not programmed.	Check the opener power cord to outlet connection. See code activation and programming section.
Opener works from the wall station but not from the transmitter?	Transmitter is not programmed. Weak or dead transmitter battery.	See code activation and programming section. See Maintenance section for battery replacement.
Opener works from the transmitter but not from the wall station?	Wall station is not programmed. Weak or dead wall station battery.	See code activation and programming section. See Maintenance section for battery replacement.
Door does not move and the opener beeps two times?	The install routine has not been performed.	Perform the install routine.
Door does not move with a remote control command and no beeps come from the opener? Door does not move with a remote control command and opener beeps one time?	Blown fuse or tripped circuit breaker. No power to the opener. Possible damaged motor wiring.	Reset the circuit breaker or Contact a qualified service person for fuse information. Check power cord connection. Call a qualified service person.
Door stops or reverses, and the opener beeps three or four times?	Obstruction encountered. Infrared sensor alignment. Out-of-balance condition detected.	Clear the door path. Re-align Infrared sensors. Contact a qualified service person.
Door does not close properly?	Counterbalance cables are not on the drums properly.	Apply constant pressure to the wall station's up/down button to close the door.
Door will not close?	Thermal delay: The door has cycled eight times in a five-minute period. Infrared sensor alignment. Contact obstruction test failure.	Door will operate after a one-minute waiting period. Re-align Infrared sensors. Repeat the install routine or contact a qualified service person.
Door does not travel to the full open or full close position?	Door is out of balance. Door limits are set improperly.	Call a qualified service person. Repeat the install routine.
Door is not sealing to the floor?	Bottom door limit is set too high. Outside door seal is too tight against the face of the door.	Disconnect the opener and force the door to the floor. Reconnect the opener and activate the install routine. Adjust wheather seal position.
Door is reversing at or near the floor? Motor does not pivot up fully when door is opening?	Counterbalance springs have too much tension (torsion).	Call a qualified service person. Install routine may have to be rerun.
Door is reversing at or near the floor?	Outside door seal is too tight against the face of the door. Vertical track is spaced to close to the bottom door section, causing the door to bind.	Reinstall the door seal so as to be not so tight against the face of the door. Adjust track away from the door until binding is removed.
Door makes "popping" noise after safety reversal?	Cables on the drum are not aligned in the grove.	Operate the door up/down with the wall station, cables will align automatically.

Troubleshooting (continued...)

SYMPTOM	PROBABLE CAUSE	CORRECTIVE ACTION
Light fixture will not light during the door operation or by pressing the wall station light button?	Faulty light bulb. No power to receptacle. Wall station not programmed to light.	Install new bulb (75W Max). Check circuit breakers. Program per step 14.
Motor does not pull fully up when using the emergency disconnect?	Disconnect cable has slipped inside of handle.	Re-install handle per instructions in Step 7.
Motor starts but the door will not move?	Opener is disconnected from the torsion tube.	Ensure disconnect handle is in the "motor operated" position. Re-install handle per instructions in Step 7.
Motor does not pivot down? Motor pivots partially after the door closes?	Detent pin is set too hard.	Using a screwdriver, rotate the detent pin counterclockwise in 1/4 turn increments until the motor fully pivots down after the door closes.
Motor pivots down prematurely (before the door closes completely)?	Detent pin is set too soft.	Using a screwdriver, rotate detent pin clockwise in 1/4 turn increments; until motor fully pivots down after door closes, and opener immediately shuts off.

Lock Troubleshooting

SYMPTOM	PROBABLE CAUSE	CORRECTIVE ACTION
The door interferes with the lock when manually verifying clearance.	Lock is set incorrectly. The torsion tube is not level. Motor not fully rotated up to detent pin engaged position.	Ensure lock is set per step 18. Contact a qualified service person. Remount the disconnect handle and bracket per Step 7 of this manual, ensuring proper cable tension between the opener and the handle.

LIFETIME LIMITED WARRANTY

The Manufacturer warrants that the idrive™ garage door opener will be free from defects in materials and workmanship including electronic components for a period of **FIVE YEARS** from the date of installation, provided it is properly installed, maintained and cared for under specified use and service. The motor has an extended **LIFETIME** warranty against defects in materials and workmanship.

This Warranty extends to the original homeowner, providing the garage door opener is installed in his/her place of primary residence. It is not transferable. The warranty applies to residential property only and is not valid on commercial or rental property.

NO EMPLOYEE, DISTRIBUTOR, OR REPRESENTATIVE IS AUTHORIZED TO CHANGE THE FOREGOING WARRANTIES IN ANY WAY OR GRANT ANY OTHER WARRANTY ON BEHALF OF MANUFACTURER.

The Manufacturer shall not be responsible for any damage resulting to or caused by its products by reason of installation, improper storage, unauthorized service, alteration of products, neglect or abuse, any acts of nature beyond Manufacturer's control (such as, but not limited to, lightning, power surges, water damage, etc.), or attempt to use the products for other than the customary usage or for their intended purposes. The above warranty does not cover normal wear or any damage beyond Manufacturer's control or replacement labor.

THIS WARRANTY COVERS A CONSUMER PRODUCT AS DEFINED BY THE MAGNUSON-MOSS WARRANTY ACT. NO WARRANTIES, EXPRESSED OR IMPLIED, (INCLUDING, BUT NOT LIMITED TO, THE WARRANTY OF MERCHANTABILITY OR FITNESS FOR A PARTICULAR PURPOSE), SHALL EXTEND BEYOND THE APPLICABLE TIME PERIOD STATED IN BOLD FACE TYPE ABOVE.

Claims for defects in material and workmanship covered by this warranty shall be made in writing to the dealer from whom the product was purchased within the warranty period. Manufacturer may either send a service representative or have the product returned to the Manufacturer at Buyer's expense for inspection. If judged by Manufacturer to be defective in material or workmanship, the product will be replaced or repaired at the option of the Manufacturer, free from all charges except authorized transportation and replacement labor.

THE REMEDIES OF BUYER SET FORTH HEREIN ARE EXCLUSIVE AND ARE IN LIEU OF ALL OTHER REMEDIES, THE LIABILITY OF MANUFACTURER, WHETHER IN CONTACT, TORT, UNDER ANY WARRANTY OR OTHERWISE, SHALL NOT EXTEND BEYOND ITS OBLIGATION TO REPAIR OR REPLACE, AT ITS OPTION, ANY PRODUCT OR PART FOUND BY MANUFACTURER TO BE DEFECTIVE IN MATERIAL OR WORK SHALL NOT BE RESPONSIBLE FOR ANY DIRECT, INDIRECT, SPECIAL OR CONSEQUENTIAL DAMAGES OF ANY NATURE.

This Warranty gives you specific legal rights and you may have other rights, which may vary from state to state. However, some states do not allow limitation on how long an implied warranty lasts or the exclusion or limitation of incidental or consequential damages so the above limitations or exclusions may not apply to you.

Cut template to aid Installation:

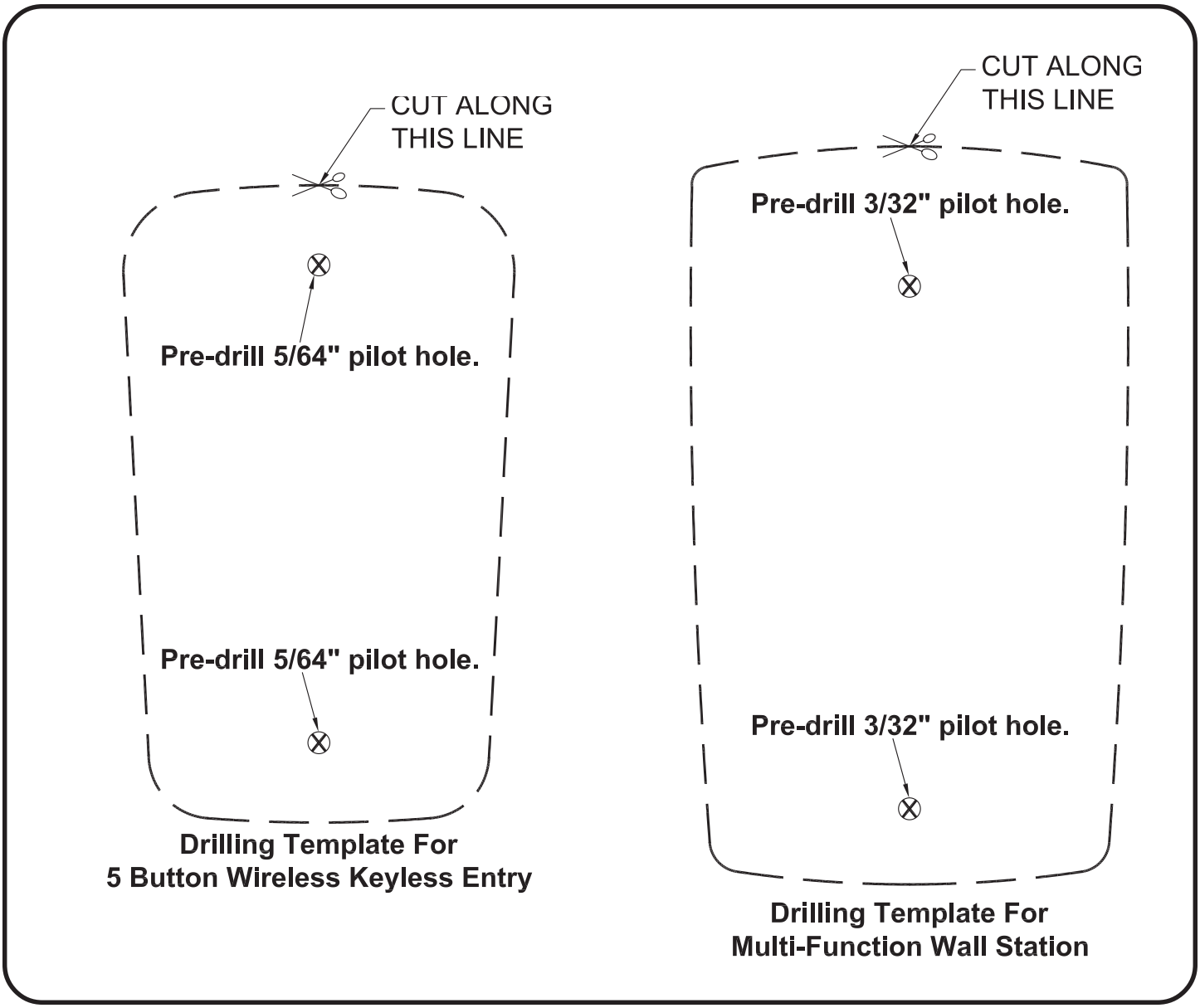

Questions??

For quick answers and helpful advise, call
Wayne-Dalton Customer Service
(888) 827-3667

© Copyright 2003, 2004 Wayne-Dalton Corp.