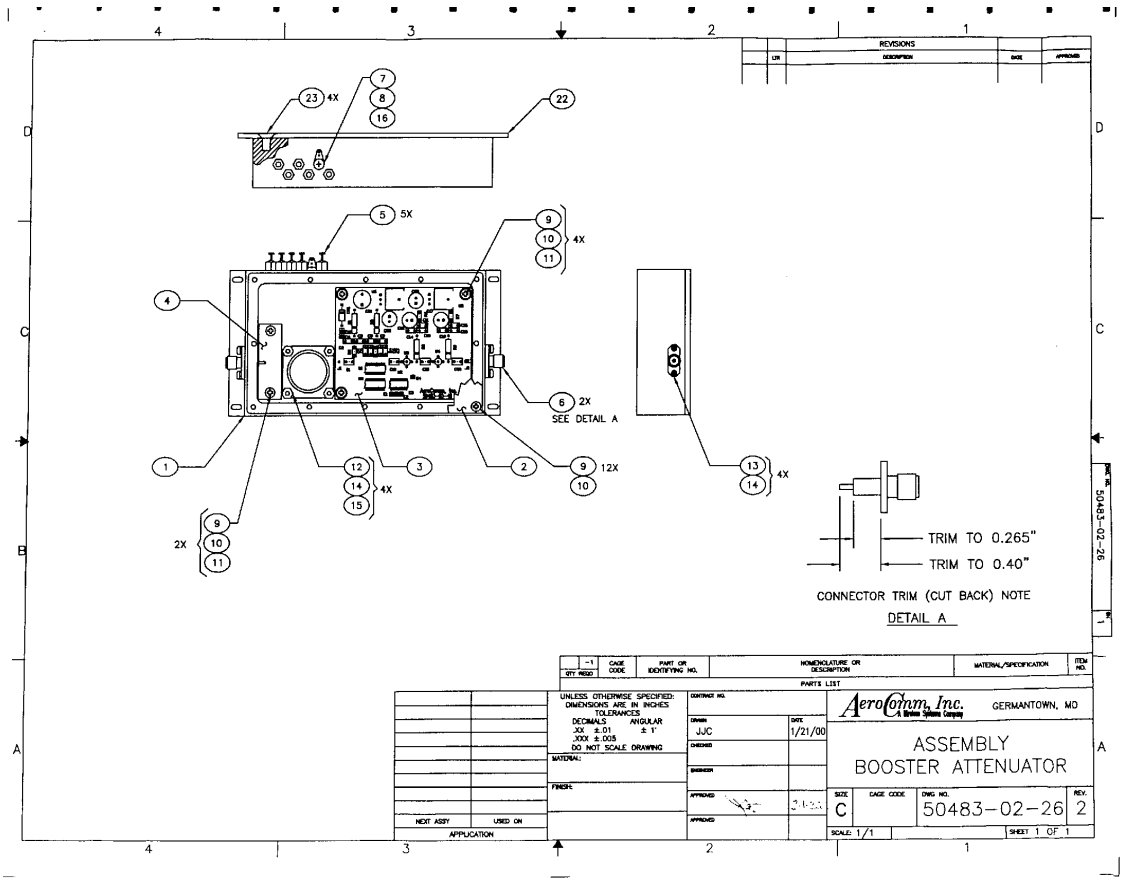
REVISIONS
LTR
DESCRIPTION
DATE
APPROVED
23 4X
7
8
16
22
5 5X
9
10
11 4X
4
6 2X
SEE DETAIL A
1
12
14
15 4X
3
2
9 12X
10
13
14 4X
9
10
11 2X
TRIM TO 0.265"
TRIM TO 0.40"
CONNECTOR TRIM (CUT BACK) NOTE
DETAIL A
QTY REQD
CAGE CODE
PART OR IDENTIFYING NO.
NOMENCLATURE OR DESCRIPTION
MATERIAL/SPECIFICATION
ITEM NO.
PARTS LIST
UNLESS OTHERWISE SPECIFIED: DIMENSIONS ARE IN INCHES
TOLERANCES
DECIMALS ANGULAR
.XX ±.01 ± 1°
.XXX ±.005
DO NOT SCALE DRAWING
MATERIAL:
FINISH:
CONTRACT NO.
DRAWN JJC 1/21/00
CHECKED
ENGINEER
APPROVED
APPROVED
NEXT ASSY
USED ON
APPLICATION
AeroComm, Inc.
A Wireless Systems Company
GERMANTOWN, MD
ASSEMBLY
BOOSTER ATTENUATOR
SIZE C
CAGE CODE
DWG NO. 50483-02-26
REV. 2
SCALE: 1/1
SHEET 1 OF 1
50483-02-26

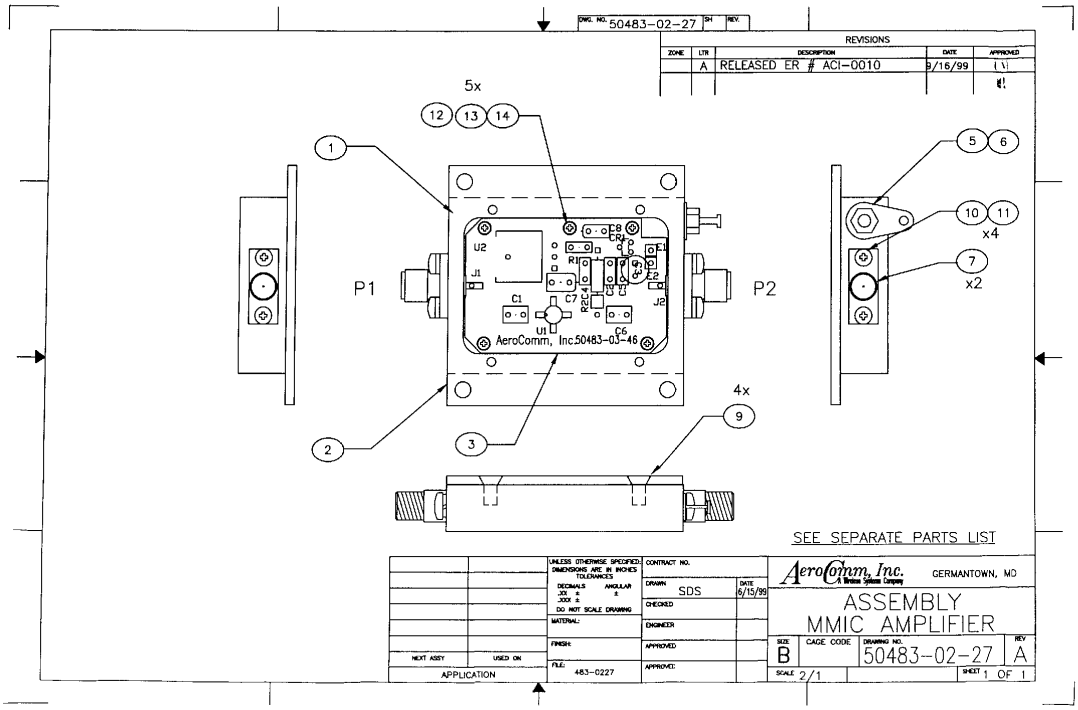
DWG. NO. 50483-02-27
SH
REV.
REVISIONS
ZONE
LTR
DESCRIPTION
DATE
APPROVED
A
RELEASED ER # ACI-0010
9/16/99
5x
12
13
14
1
U2
J1
R1
C8
C2
C3
C4
C5
C9
C1
C7
R2
R4
U1
C6
J2
AeroComm, Inc.50483-03-46
P1
P2
5
6
10
11
x4
7
x2
2
3
4x
9
SEE SEPARATE PARTS LIST
UNLESS OTHERWISE SPECIFIED: DIMENSIONS ARE IN INCHES
TOLERANCES
DECIMALS ANGULAR
.XX ± ±
.XXX ±
DO NOT SCALE DRAWING
MATERIAL:
FINISH:
FILE: 483-0227
CONTRACT NO.
DRAWN SDS 6/15/99
CHECKED
ENGINEER
APPROVED
APPROVE:
NEXT ASSY
USED ON
APPLICATION
AeroComm, Inc.
A Wireless Systems Company
GERMANTOWN, MD
ASSEMBLY
MMIC AMPLIFIER
SIZE B
CAGE CODE
DRAWING NO. 50483-02-27
REV A
SCALE 2/1
SHEET 1 OF 1

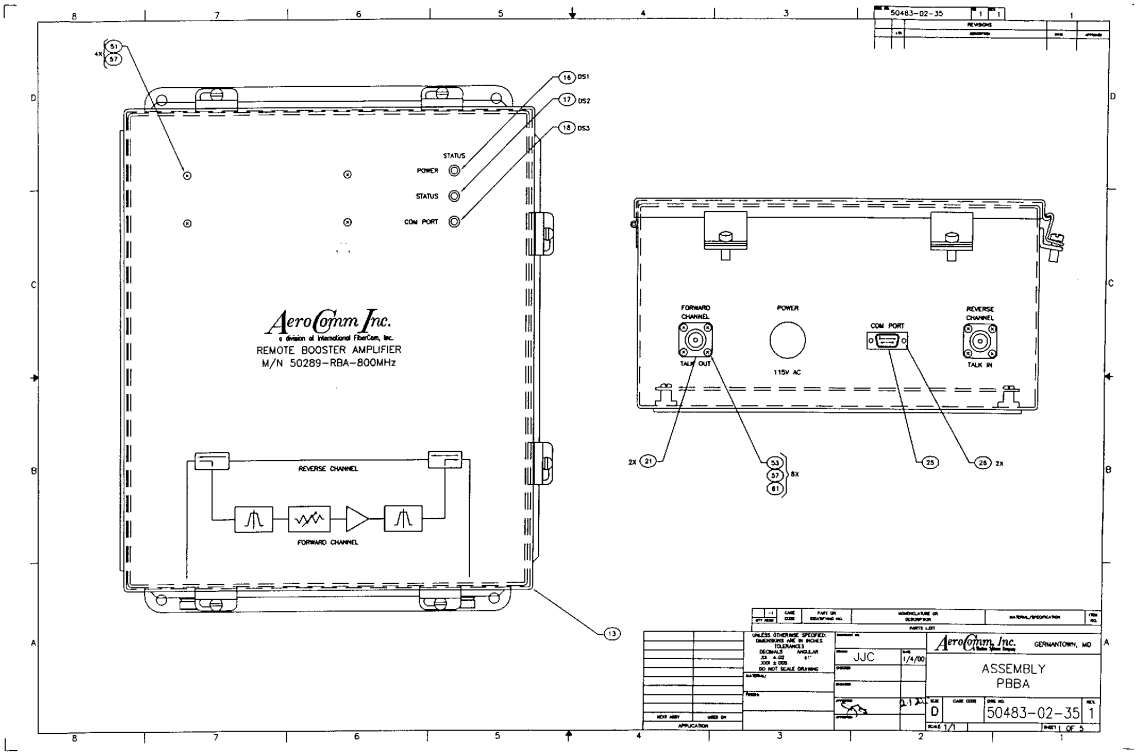

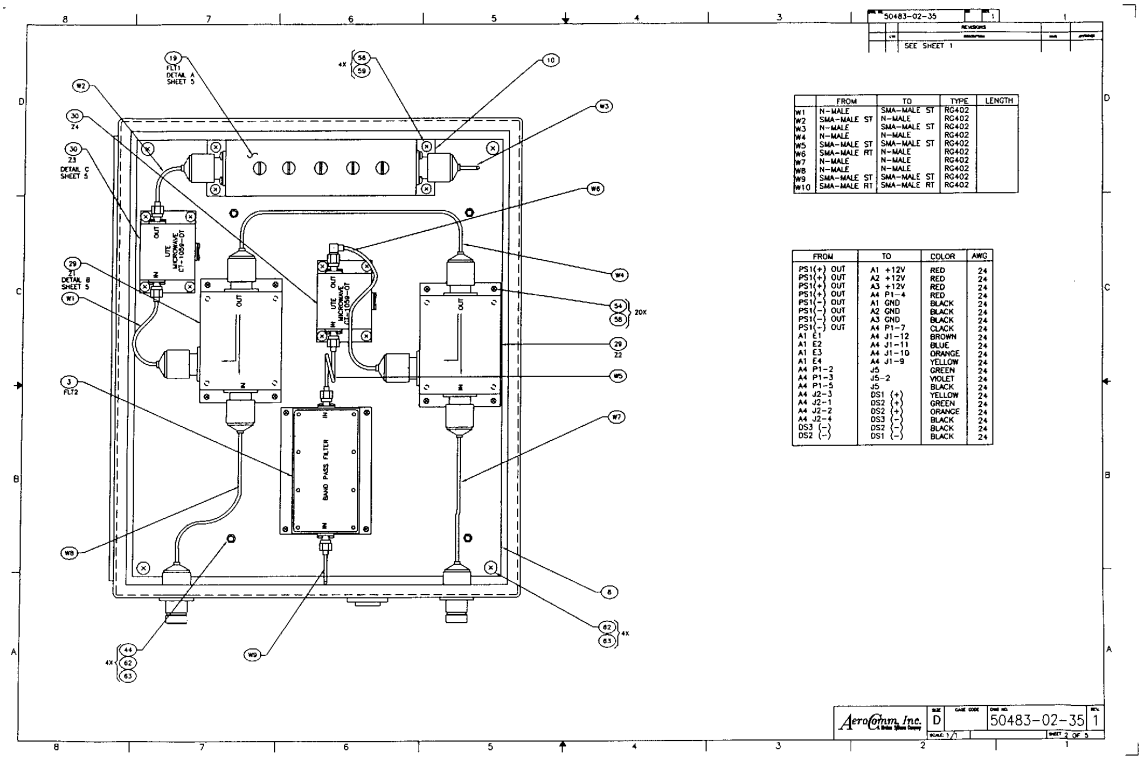

	FROM	TO	TYPE	LENGTH
W1	N-MALE	SMA-MALE ST	RG402	
W2	SMA-MALE ST	N-MALE	RG402	
W3	N-MALE	SMA-MALE ST	RG402	
W4	N-MALE	N-MALE	RG402	
W5	SMA-MALE ST	SMA-MALE ST	RG402	
W6	SMA-MALE RT	N-MALE	RG402	
W7	N-MALE	N-MALE	RG402	
W8	N-MALE	N-MALE	RG402	
W9	SMA-MALE ST	SMA-MALE ST	RG402	
W10	SMA-MALE RT	SMA-MALE RT	RG402	

FROM	TO	COLOR	AWG
PS1(+) OUT	A1 +12V	RED	24
PS1(+) OUT	A2 +12V	RED	24
PS1(+) OUT	A3 +12V	RED	24
PS1(+) OUT	A4 P1-4	RED	24
PS1(-) OUT	A1 GND	BLACK	24
PS1(-) OUT	A2 GND	BLACK	24
PS1(-) OUT	A3 GND	BLACK	24
PS1(-) OUT	A4 P1-7	CLACK	24
A1 E1	A4 J1-12	BROWN	24
A1 E2	A4 J1-11	BLUE	24
A1 E3	A4 J1-10	ORANGE	24
A1 E4	A4 J1-9	YELLOW	24
A4 P1-2	J5	GREEN	24
A4 P1-3	J5-2	VIOLET	24
A4 P1-5	J5	BLACK	24
A4 J2-3	DS1 (+)	YELLOW	24
A4 J2-1	DS2 (+)	GREEN	24
A4 J2-2	DS2 (+)	ORANGE	24
A4 J2-4	DS3 (-)	BLACK	24
DS3 (-)	DS2 (-)	BLACK	24
DS2 (-)	DS1 (-)	BLACK	24

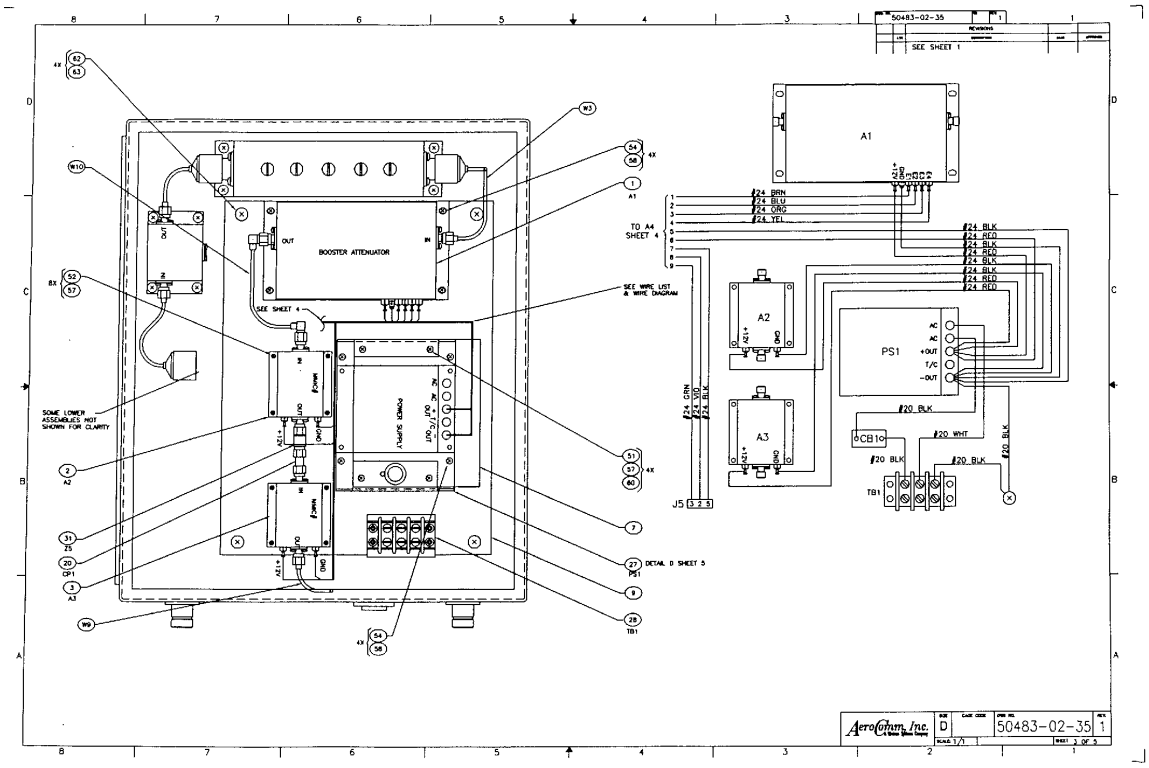

REVISION RECORD			
LTR	ECO NO:	APPROVED:	DATE:
2			6/7/99
3			6/15/99

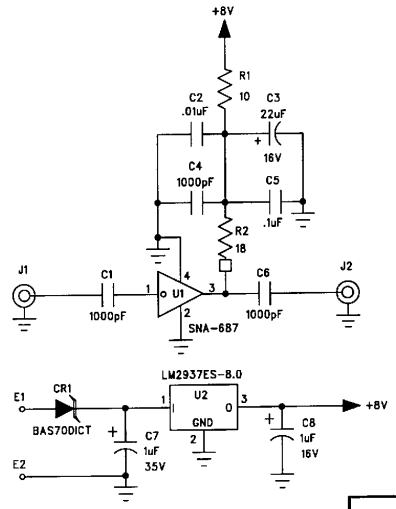

COMPANY: AeroComm, Inc.		GERMANTOWN, MD	
TITLE: SCHEMATIC DIAGRAM MMIC AMPL.			
CODE:	SIZE: A	DRAWING NO: 50483-04-46	REV: 3
SCALE:		SHEET: 1 OF 1	

DRAWN: R.W. Collier	DATED: 6/2/99
CHECKED:	DATED:
QUALITY CONTROL:	DATED:
RELEASED:	DATED:

REVISION RECORD			
LTR	ECO NO:	APPROVED:	DATE:
A	RELEASED ER # ACI-0010		9/16/99

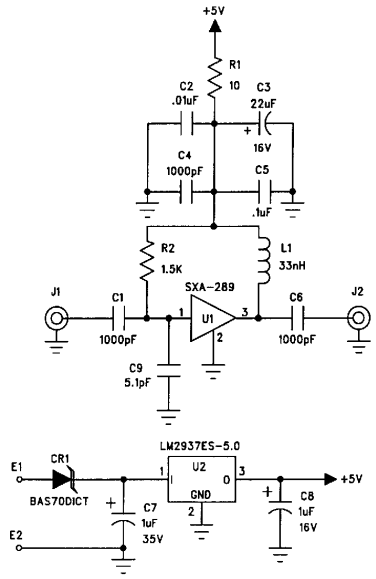

COMPANY: AeroComm, Inc. GERMANTOWN, MD

TITLE: SCHEMATIC DIAGRAM MMIC AMPL. #2

DRAWN:	DATED:
R.W. Collier	6/15/99
CHECKED:	DATED:
QUALITY CONTROL:	DATED:
RELEASED:	DATED:

CODE:	SIZE:	DRAWING NO:	REV:
	A	50483-04-54	A

SCALE: SHEET: 1 OF 1

REVISION RECORD			
LTR	ECO NO:	APPROVED:	DATE:
1	PRELIMINARY		1/19/00

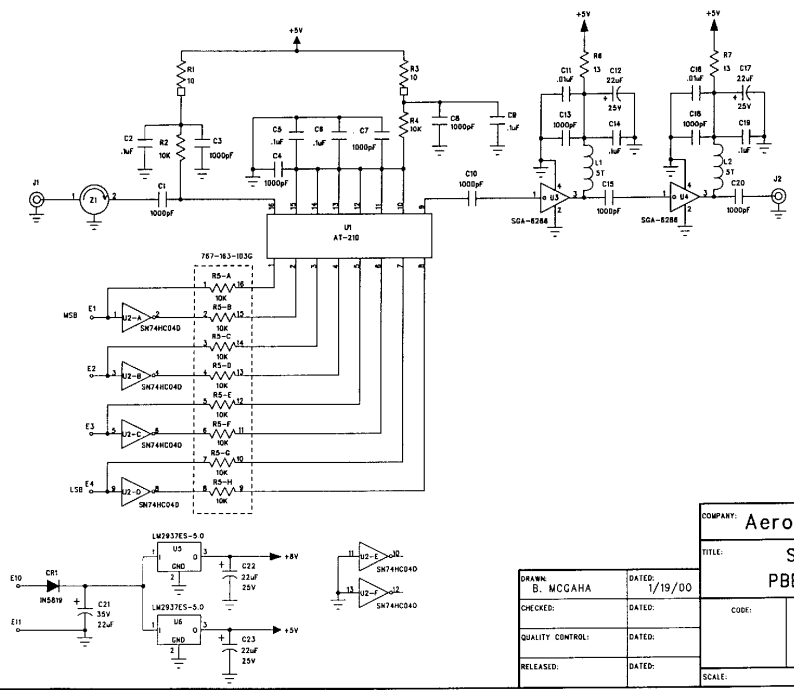

COMPANY: AeroComm, Inc. GERMANTOWN, MD

TITLE: SCHEMATIC DIAGRAM PBBA ATTENUATOR/LNA

DRAWN:	DATED:
B. MCGAHA	1/19/00
CHECKED:	DATED:
QUALITY CONTROL:	DATED:
RELEASED:	DATED:

CODE:	SIZE:	DRAWING NO:	REV:
	B	50483-04-72	1

SCALE: SHEET: 1 OF 1

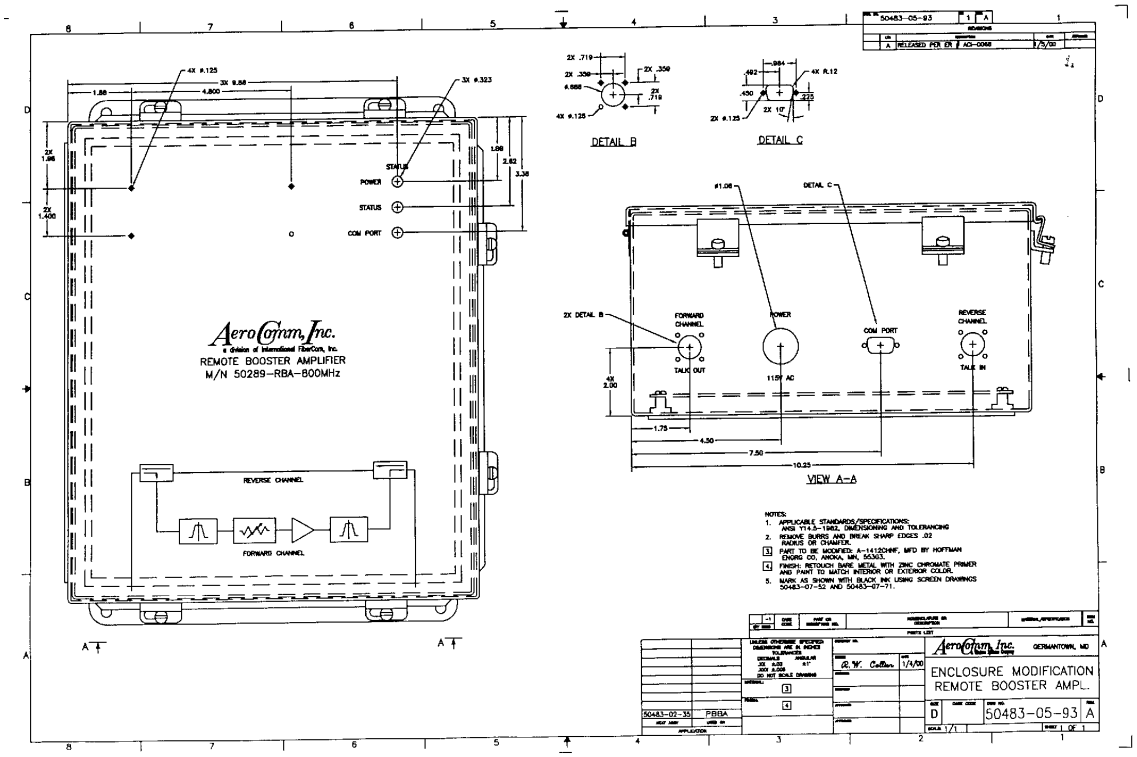
50483-05-93
RELEASED PER ER # AD-0068
DETAIL B
DETAIL C
POWER
STATUS
COM PORT
AeroComm, Inc.
a division of International FiberCom, Inc.
REMOTE BOOSTER AMPLIFIER
M/N 50289-RBA-800MHz
REVERSE CHANNEL
FORWARD CHANNEL
FORWARD CHANNEL
TALK OUT
115V AC
COM PORT
REVERSE CHANNEL
TALK IN
VIEW A-A
NOTES:
1. APPLICABLE STANDARDS/SPECIFICATIONS: ANSI Y14.5-1982, DIMENSIONING AND TOLERANCING
2. REMOVE BURRS AND BREAK SHARP EDGES .02 RADIUS OR CHAMFER.
3. PART TO BE MODIFIED: A-14120HHF, MFD BY HOFFMAN ENCRG CO, ANOKA, MN, 55303.
4. FINISH: RETOUCH BARE METAL WITH ZINC CHROMATE PRIMER AND PAINT TO MATCH INTERIOR OR EXTERIOR COLOR.
5. MARK AS SHOWN WITH BLACK INK USING SCREEN DRAWINGS 50483-07-52 AND 50483-07-71.
AeroComm, Inc.
GERMANTOWN, MD
ENCLOSURE MODIFICATION
REMOTE BOOSTER AMPL.
50483-05-93
50483-07-35
FBBA
1/4/00
SCALE 1/1
SHEET 1 OF 1