WP201 Access Point

User Manual

Part Number: LUM0073AA
Revision: Aug-2015

Safety Information

The products described in this manual can fail in a variety of modes due to misuse, age, or malfunction. Systems with these products must be designed to prevent personal injury and property damage during product operation and in the event of product failure.

Warning! Do not remove or insert the Ethernet or diagnostics cable while circuit is live unless the area is known to be free of ignition concentrations of flammable gasses or vapors.

Warranty

FreeWave Technologies, Inc. warrants your FreeWave® Wireless Data Radio against defects in materials and manufacturing for a period of one year from the date of shipment, depending on model number. In the event of a Product failure due to materials or workmanship, FreeWave will, at its discretion, repair or replace the Product. For evaultation of Warranty coverage, return the Product to FreeWave upon receiving a Return Material Authorization (RMA).

In no event will FreeWave Technologies, Inc., its suppliers, or its licensors be liable for any damages arising from the use of or inability to use this Product. This includes business interruption, loss of business information, or other loss which may arise from the use of this Product. OEM customer's warranty periods can vary.

Warranty Policy will **not apply** in the following circumstances:

1. If Product repair, adjustments, or parts replacements are required due to accident, neglect, or undue physical, electrical, or electromagnetic stress.
2. If Product is used outside of FreeWave specifications as stated in the Product's data sheet.
3. If Product has been modified, repaired, or altered by Customer unless FreeWave specifically authorized such alterations in each instance in writing. This includes the addition of conformal coating.

Special Rate Replacement Option

A special rate replacement option is offered to non-warranty returns or upgrades. The option to purchase the replacement unit at this special rate is only valid for that RMA. The special replacement rate option expires if not exercised within 30 days of final disposition of RMA.

FreeWave Technologies, Inc.
5395 Pearl Parkway, Suite 100
Boulder, CO 80301
303.381.9200
Toll Free: 1.866.923.6168
Fax: 303.786.9948
www.freewave.com

Copyright © 2015 by FreeWave Technologies, Inc.
All rights reserved.

This document is the property of FreeWave Technologies, Inc. and contains proprietary information owned by FreeWave®. This document cannot be reproduced in whole or in part by any means without written permission from FreeWave Technologies, Inc.

WP201® Return Material Authorization (RMA) Policy and Procedures

This policy describes the responsibilities and procedures of the Customer and FreeWave when a WP201® device return is required.

When a request for a WP201® device replacement has been validated by FreeWave's Customer Support, FreeWave's policy for processing the device returned due to a fault is to replace the device with a new or refurbished device upon receipt of the reported faulty product.

Important!: This policy means that a failure analysis on the returned device will NOT be performed and reported to customers.

Note: This RMA policy is subject to change without notice.
Detailed information about the FreeWave RMA policy can be found at www.freewave.com.

FreeWave Responsibilities

A failed WP201® product is inventoried at FreeWave. If FreeWave experiences a high degree of failures or a trend, FreeWave will perform a root-cause analysis and take appropriate corrective action(s).

In-Warranty Replacement Procedure

1. Customer contacts FreeWave Customer Support to report the non-functioning WP201® device.
2. FreeWave Customer Support:
   a. Validates that a device replacement is the appropriate action.
   b. Issues a FreeWave RMA number.
3. The Customer pays the shipping costs to return the WP201® device to FreeWave.
4. FreeWave sends a new or refurbished WP201® device to the Customer.

Important!: Any visual or external damage noted on returned units may void the warranty.
This will be communicated back to the customer and a Purchase Order (PO) will be requested from the customer for product replacement.

Out-of-Warranty WP201 Replacement

This procedure describes the Customer and FreeWave Customer Support responsibilities for replacing an out-of-warranty WP201 device.

Procedure

1. Customer contacts FreeWave Customer Support to report the non-functioning WP201® device.
2. FreeWave Customer Support:
   a. Validates that the device is out of warranty and if replacement is the appropriate action.
   b. Requests a PO number from the Customer (to bill the replacement WP201® device and shipping).
   c. Issues a FreeWave RMA number and advises the Customer to return the device to FreeWave.
3. FreeWave:
   a. Bills the Customer for the replacement WP201® device and shipping.
   b. Sends a new or refurbished WP201® device to the Customer.

Export Notification

FreeWave Technologies, Inc. products may be subject to control by the Export Administration Regulations (EAR) and/or the International Traffic in Arms Regulations (ITAR). Export, re-export, or transfer of these products without required authorization from the U.S. Department of Commerce, Bureau of Industry and Security, or the U.S. Department of State, Directorate of Defense Trade Controls, as applicable, is prohibited. Any party exporting, re-exporting, or transferring FreeWave products is responsible for

This document is the property of FreeWave Technologies, Inc. and contains proprietary information owned by FreeWave®. This document cannot be reproduced in whole or in part by any means without written permission from FreeWave Technologies, Inc.

obtaining all necessary U.S. government authorizations required to ensure compliance with these and other applicable U.S. laws. Consult with your legal counsel for further guidance.

FCC Notifications

This device complies with Part 15 of the FCC rules. Operation is subject to the following two conditions: 1) This device may not cause harmful interference and 2) this device must accept any interference received, including interference that may cause undesired operation.

The content of this guide covers FreeWave Technologies, Inc. models sold under FCC ID: TBD.

All models sold under the FCC ID(s) listed above must be installed professionally and are only approved for use when installed in devices produced by FreeWave Technologies or third party OEMs with the express written approval of FreeWave Technologies, Inc. Changes or modifications should not be made to the device.

IC Notifications

This device complies with Industry Canada license-exempt RSS standard(s). Operation is subject to the following two conditions: (1) this device may not cause interference, and (2) this device must accept any interference, including interference that may cause undesired operation of the device.

Ce dispositif est conforme aux normes permis-exemptes du Canada RSS d'industrie. L'opération est sujette aux deux conditions suivantes : (1) ce dispositif peut ne pas causer l'interférence, et (2) ce dispositif doit accepter n'importe quelle interférence, y compris l'interférence qui peut causer le fonctionnement peu désiré du dispositif.

GNU License Notification

Some of the software in the firmware is licensed under the GNU General Public License and other Open Source and Free Software licenses. You can obtain corresponding source by contacting FreeWave and requesting the source on CD.

Restricted Rights

Any product names mentioned in this manual may be trademarks or registered trademarks of their respective companies and are hereby acknowledged.

This manual is only for use by purchasers and other authorized users of FreeWave products.

No part of this manual may be reproduced or transmitted in any form or by any means, electronic or mechanical, or for any purpose without the express written permission of FreeWave Technologies, Inc. FreeWave reserves the right to make changes to this manual without notice. FreeWave assumes no responsibility or liability for the use of this manual or the infringement of any copyright or other proprietary right.

WP201 Product Safety

WP201 Conditions of Safe Use

- Provision shall be made to prevent the rated voltage from being exceeded by the transient disturbances of more than 140% of the peak rated voltage.
- The **WP201** CANNOT be used in an environment greater than pollution degree 2.

This document is the property of FreeWave Technologies, Inc. and contains proprietary information owned by FreeWave®. This document cannot be reproduced in whole or in part by any means without written permission from FreeWave Technologies, Inc.

Table Of Contents

Preface **7**
1. WP201 Overview **9**
1.1 System Requirements 10
1.2 User-supplied Equipment 10
1.3 WP201 Included Accessories 11
1.4 WP201 Hardware Layout 13
1.4.1 Front of the WP201 13
1.4.2 Back of the WP201 14
1.4.3 Left Side of the WP201 15
1.4.4 Bottom of the WP201 15
1.4.5 Right Side of the WP201 16
2. WP201 Installation and Setup **17**
2.1 Connect to the WP201 Access Point 18
2.2 WP201 IP Address Configuration 19
2.3 Access the WP201 22
2.4 Changing the WP201 Mode 23
2.5 Wall Mounting the WP201 25
2.6 Pole Mounting the WP201 29
Appendix A: WP201 Technical Specifications **35**

This document is the property of FreeWave Technologies, Inc. and contains proprietary information owned by FreeWave®. This document cannot be reproduced in whole or in part by any means without written permission from FreeWave Technologies, Inc.

This document is the property of FreeWave Technologies, Inc. and contains proprietary information owned by FreeWave®. This document cannot be reproduced in whole or in part by any means without written permission from FreeWave Technologies, Inc.

Preface

Where to Find Additional Information

WP201 Quick Start Guide

Use the FreeWave website www.freewave.com to download the latest version of the Quick Start Guide.

Contacting FreeWave Technical Support

For up-to-date troubleshooting information, check the **Support** page at www.freewave.com.

FreeWave provides technical support Monday through Friday, 8:00 AM to 5:00 PM Mountain Time (GMT -7).

- Call toll-free at 1.866.923.6168.
- In Colorado, call 303.381.9200.
- Contact us through e-mail at moreinfo@freewave.com.

Printing this Document

This document is set to print double-sided with a front cover and a back cover. Viewing this document online with a PDF viewer, may show pages intentionally left blank to accommodate the double-sided printing.

Document Styles

This document uses these styles:

This document is the property of FreeWave Technologies, Inc. and contains proprietary information owned by FreeWave®. This document cannot be reproduced in whole or in part by any means without written permission from FreeWave Technologies, Inc.

- FreeWave applications appear as: **FreeWave**.
- Parameter setting text appears as: **[Page=radioSettings]**
- File names appear as: **configuration.cfg**.
- File paths appear as: **C:\Program Files (x86)\FreeWave Technologies**.
- User-entered text appears as: **xxxxxxxxx**.
- 3rd-party names appear as: **Notepad**®.

Caution: Indicates a situation that **MAY** cause damage to personnel, the radio, data, or network.

Example: Provides example information of the related text.

FreeWave Recommends: Identifies FreeWave recommendation information.

Important!: Provides semi-cautionary information relevant to the text or procedure.

Note: Emphasis of specific information relevant to the text or procedure.

Tip! Provides time saving or informative suggestions about using the product.

STOP **Warning!** Indicates a situation that **WILL** cause damage to personnel, the radio, data, or network.

Documentation Feedback

Send comments or questions about this document's content to techpubs@freewave.com. In the email, include the title of the document or the document's part number and revision letter (found in the footer).

This document is the property of FreeWave Technologies, Inc. and contains proprietary information owned by FreeWave®. This document cannot be reproduced in whole or in part by any means without written permission from FreeWave Technologies, Inc.

1. WP201 Overview

Thank you for purchasing the **WP201 Access Point**.

The FreeWave **WP201** is a high-powered, long-range, 3x3 Dual-Band, Wireless, 802.11ac/a/b/g/n Outdoor Access Point. It can be configured as:

- an Access Point.
- a Client Bridge.
- a Wireless Distribution System (WDS-AP, Station, or Bridge).

The FreeWave **WP201**:

- is easy to install in almost any location with its PoE (Power over Ethernet) Injector for quick outdoor installation.
- enables network administrators to control its transmit power and feature settings for selecting narrow bandwidths and traffic shaping.
- supports wireless encryption including Wi-Fi Protected Access (WPA-PSK/ WPA2-PSK) Encryption, and IEEE 802.1x with RADIUS.

The **WP201** is designed to operate in a variety of outdoor environments and:

- Supports IEEE 802.11ac/a/b/g/n wireless standards with a maximum speed of:
  - 450Mbps data rate on a 2.4GHz frequency band under 802.11b/g/n mode.
  - 1300Mbps data rate on a 5GHz band under 802.11ac/a/n mode for communicating to and from 5GHz capable computers, tablets or smart phones or transferring files.

This document is the property of FreeWave Technologies, Inc. and contains proprietary information owned by FreeWave®. This document cannot be reproduced in whole or in part by any means without written permission from FreeWave Technologies, Inc.

> **Example**: Several **WP201** Access Points can be deployed in a campus setting using the 5GHz band as a backhaul to provide multiple 2.4GHz wireless cells for computers or mobile devices in common outdoor areas.

- A maximum of 29dBm transmit power, enabling long range connectivity.
- There are three detachable:
  - 5dBi 2.4GHz omni-directional antennas.
  - 7dBi 5GHz omni-directional antennas.
- Mesh Supported (2.4GHz).
- 802.3at - capable switches or injectors.
- Band Steering shifts Dual Band clients to 5GHz for better throughput performance.
- Secured Guest Network option available

Notes

- Maximum data rates are based on IEEE 802.11 standards.
- Actual throughput and range may vary depending on many factors including environmental conditions, distance between devices, radio interference in the operating environment, and mix of devices in the network.
- Features and specifications are subject to change without notice.
- Trademarks and registered trademarks are the property of their respective owners.

1.1 System Requirements

These are the system requirements needed to configure the **WP201**:

- Computer with:
  - an Ethernet interface or wireless network capability
  - **Windows**® 7 or greater, Mac OS, or Linux-based operating systems.
- Broadband Internet Service (Cable or DSL Modem)
- Web browser (i.e., Internet Explorer, Firefox, Safari, Chrome).

1.2 User-supplied Equipment

- Computer with **Windows**® 7 or greater
- Qty-2: CAT5e Ethernet cables without strain relief

This document is the property of FreeWave Technologies, Inc. and contains proprietary information owned by FreeWave®. This document cannot be reproduced in whole or in part by any means without written permission from FreeWave Technologies, Inc.

1.3 WP201 Included Accessories

The WP201 package contains these items:

WP201 Included Accessories		
Qty	**Description**	**Image Letter**
1	WP201 Access Point	
1	WP201 Quick Start Guide	
1	Mounting Bracket	A
1	PoE Injector	B
1	Mounting Kit Package (hex cap screws, washers, wall anchors and bolts, ring clamp)	C
2	Green Ground Cables	D
1	Packaged Ground Screw	E
1	Power Adapter	F
1	Pole Mounting Bracket	G
3	Detachable 7dBi 5GHz omni-directional antennas	H
3	Detachable 5dBi 2.4GHz omni-directional antennas	H

Important!: ALL items must be returned to issue a refund.

This document is the property of FreeWave Technologies, Inc. and contains proprietary information owned by FreeWave®. This document cannot be reproduced in whole or in part by any means without written permission from FreeWave Technologies, Inc.

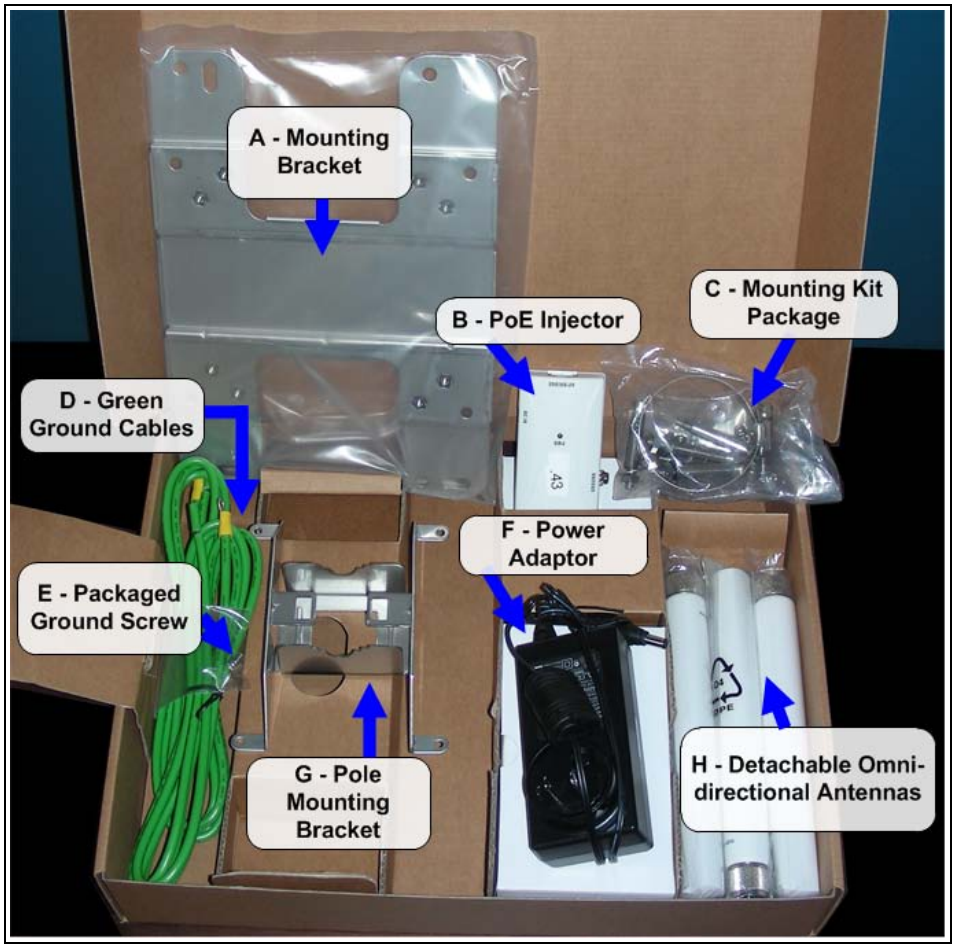

Figure 1: WP201 Included Accessories

This document is the property of FreeWave Technologies, Inc. and contains proprietary information owned by FreeWave®. This document cannot be reproduced in whole or in part by any means without written permission from FreeWave Technologies, Inc.

1.4 WP201 Hardware Layout

These images identify the hardware layout of the **WP201**.

1.4.1 Front of the WP201

Figure 2: Front of the WP201

Front of the WP201			
#	**Name**	**Description**	**Accessory Location*** **
1	2.4 GHz Antennas	Detachable 5 dBi 2.4 GHz omni-directional	H
2	5 GHz Antennas	Detachable 7 dBi 5 GHz omni-directional	H

Note: ***See WP201 Included Accessories (on page 11).

This document is the property of FreeWave Technologies, Inc. and contains proprietary information owned by FreeWave®. This document cannot be reproduced in whole or in part by any means without written permission from FreeWave Technologies, Inc.

1.4.2 Back of the WP201

Figure 3: Back of the WP201

Back of the WP201			
#	**Name**	**Description**	**Accessory Location*** **
3	Ground screw hole	Using the enclosed **Packaged Ground Screw**, attach the loop end of one of the supplied **Green Ground Cables** to the ground point on the Back of the WP201 (on page 14). **Important!**: The Green Ground Cable MUST BE attached to the **WP201** BEFORE the Mounting Bracket is attached.	E
4	Mounting Holes	The Mounting Holes are used to attach the Mounting Bracket to the **WP201**.	A

Note: ***See WP201 Included Accessories (on page 11).

This document is the property of FreeWave Technologies, Inc. and contains proprietary information owned by FreeWave®. This document cannot be reproduced in whole or in part by any means without written permission from FreeWave Technologies, Inc.

1.4.3 Left Side of the WP201

Figure 4: Left Side of the WP201

Left Side of the WP201		
#	**Name**	**Description**
5	Serial Number label	The Serial Number of the WP201 is 10 digits: • 123-456-7890

1.4.4 Bottom of the WP201

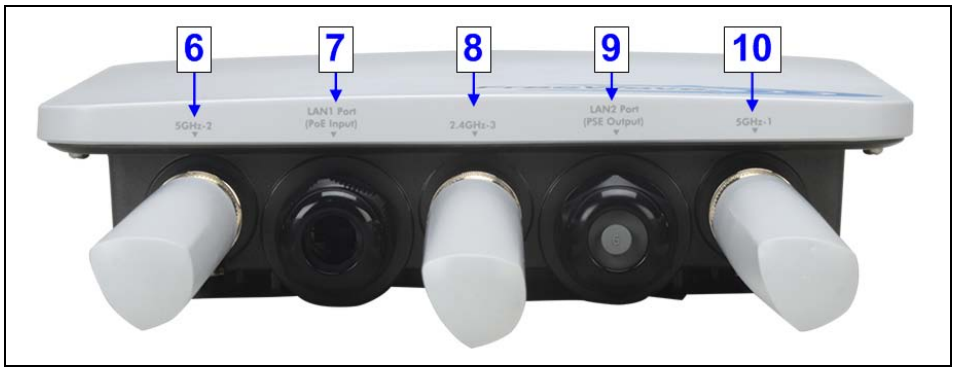

Figure 5: Bottom of the WP201

Bottom of the WP201			
#	**Name**	**Description**	**Accessory Location*** **
6	5GHz Antenna	Detachable 7 dBi 5 GHz omni-directional	H
7	LAN Port 1 (PoE Input)	802.3at Ethernet port for RJ-45 cable.	
8	2.4GHz Antenna	Detachable 5 dBi 2.4 GHz omni-directional	H
9	LAN Port 2 (PSE Output)	802.3af Ethernet port for RJ-45 cable.	
10	5GHz Antenna	Detachable 7 dBi 5 GHz omni-directional	H

Note: ***See WP201 Included Accessories (on page 11).

This document is the property of FreeWave Technologies, Inc. and contains proprietary information owned by FreeWave®. This document cannot be reproduced in whole or in part by any means without written permission from FreeWave Technologies, Inc.

1.4.5 Right Side of the WP201

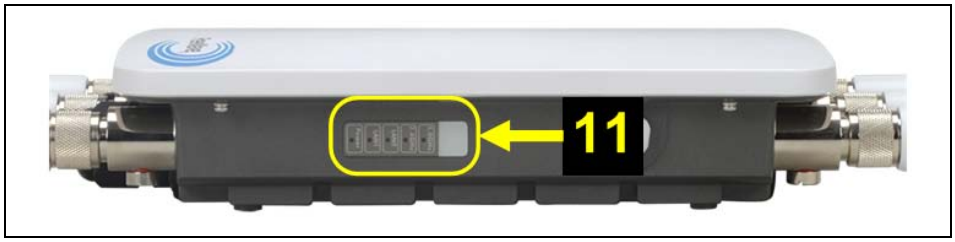

Figure 6: Right of the WP201

Front of the WP201		
#	**Name**	**Description**
11	LED Indicators: LED lights	The LEDs are: • Power • LAN Port 1 • LAN Port 2 • 2.4 GHz Connection • 5 GHz Connection

Note: ***See WP201 Included Accessories (on page 11).

This document is the property of FreeWave Technologies, Inc. and contains proprietary information owned by FreeWave®. This document cannot be reproduced in whole or in part by any means without written permission from FreeWave Technologies, Inc.

2. WP201 Installation and Setup

This section provides procedure information about installation and initial setup of the **WP201**.

- Connect to the WP201 Access Point (on page 18).
- WP201 IP Address Configuration (on page 19).
- Access the WP201 (on page 22).
- Changing the WP201 Mode (on page 23).
- Wall Mounting the WP201 (on page 25).
- Pole Mounting the WP201 (on page 29).

This document is the property of FreeWave Technologies, Inc. and contains proprietary information owned by FreeWave®. This document cannot be reproduced in whole or in part by any means without written permission from FreeWave Technologies, Inc.

2.1 Connect to the WP201 Access Point

1. Attach and gently tighten the provided antennas to the appropriate port on the **WP201**.
2. Attach one of the supplied Green Ground Cables to the **Ground** screw on the **PoE Injector**.
3. Attach the other end of the Green Ground Cable to a weather-proof ground.
4. Using one of the CAT5e Ethernet cables, connect one end of the cable to the **LAN 1 Port (PoE Input)** of the **WP201** and the other end into the **AP/Bridge** port on the **PoE Injector**.
5. Connect the second CAT5e Ethernet cable to the **Network** port of the **PoE Injector** and the other end to the computer Ethernet port.
6. Connect the **Power Adapter** to the **DC IN** port of the **PoE Injector** and plug the other end into an electrical outlet.

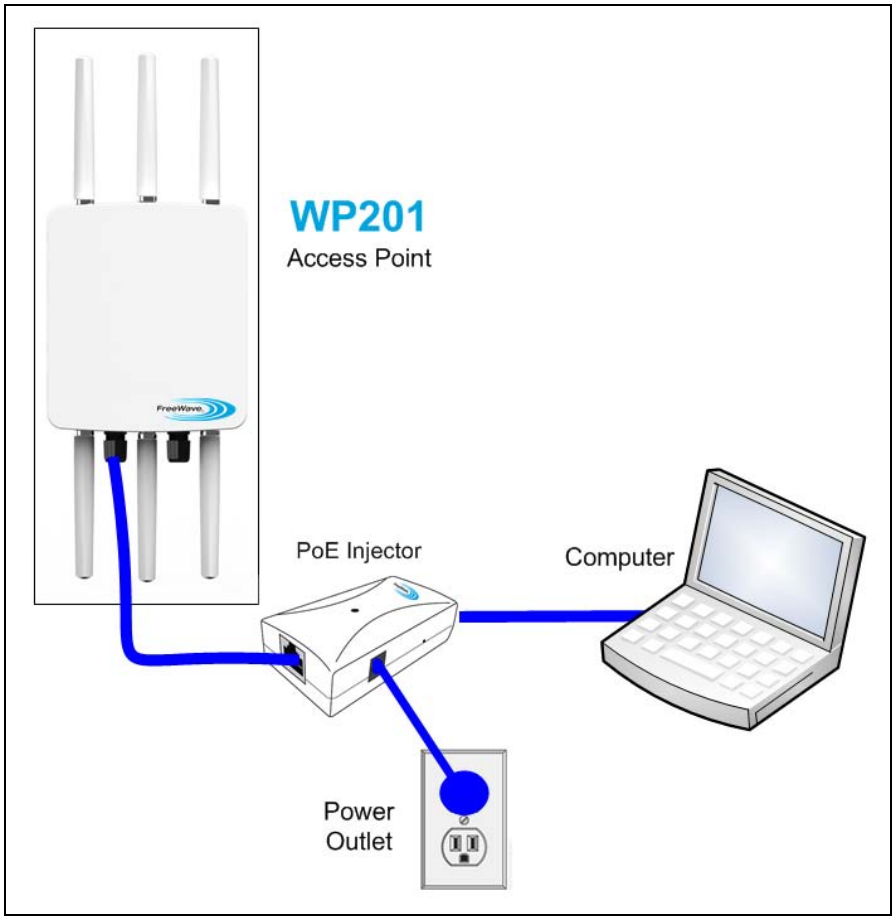

Figure 7: Connecting the WP201 Access Point

Note: The **WP201** can be powered through the **LAN 1 Port (PoE Input)** by any PSE (Power Sourcing Equipment) which supports IEEE802.11at (PoE+) including the provided PoE Injector. With adequate input power, the **WP201** can power a device connected to the **LAN 2 Port (PSE Output)**.

This document is the property of FreeWave Technologies, Inc. and contains proprietary information owned by FreeWave®. This document cannot be reproduced in whole or in part by any means without written permission from FreeWave Technologies, Inc.

2.2 WP201 IP Address Configuration

1. Turn on the computer.
2. Click the **Windows**® Start button and select **Control Panel**.
3. Click **Network and Internet > View Network Status and Tasks**.
4. Click the **Change adapter settings** link.
5. Double-click the **Local Area Connection** link.

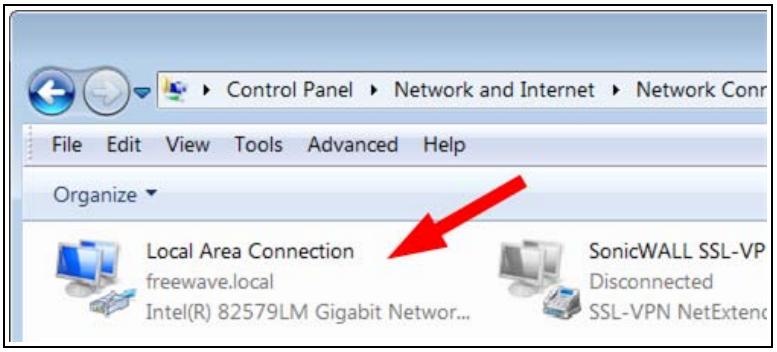

Figure 8: Local Area Connection link

The **Local Area Connection Status** dialog box opens.

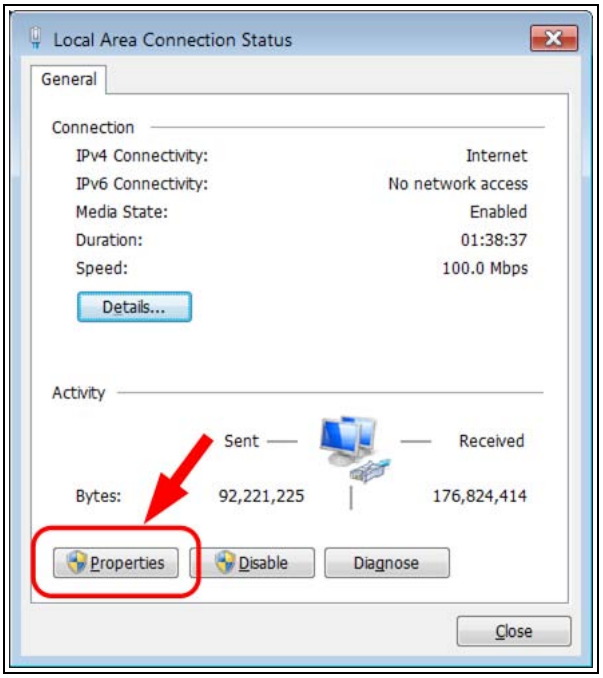

Figure 9: Local Area Connection Status dialog box

6. Click **Properties**.
   The **Local Area Connection Properties** dialog box opens.
7. Select the **Internet Protocol Version 4 (TCP/IPv4)** option.

This document is the property of FreeWave Technologies, Inc. and contains proprietary information owned by FreeWave®. This document cannot be reproduced in whole or in part by any means without written permission from FreeWave Technologies, Inc.

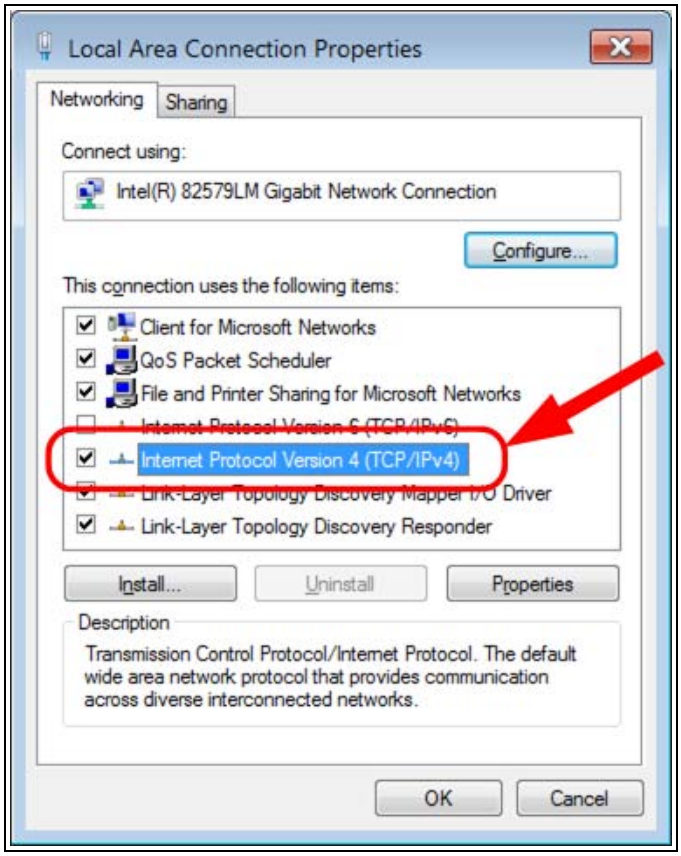

Figure 10: Local Area Connection Properties dialog box

8. Click **Properties**.
   The **Internet Protocol Version 4 (TCP/IPv4) Properties** dialog box opens.
9. Select the **Use the following IP address** option button.
10. In the **IP Address** text box, enter an IP Address that is DIFFERENT from the **WP201**.

This document is the property of FreeWave Technologies, Inc. and contains proprietary information owned by FreeWave®. This document cannot be reproduced in whole or in part by any means without written permission from FreeWave Technologies, Inc.

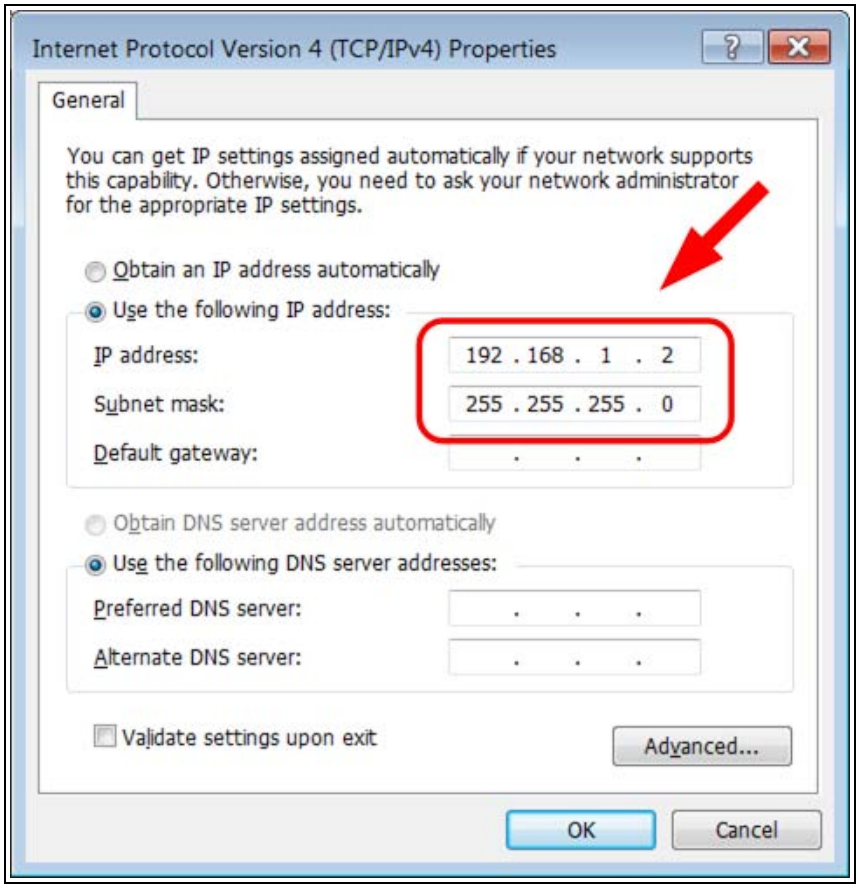

Figure 11: Local Area Connection Properties dialog box

Note: The default **WP201** IP Address is **192.168.1.1**.

Example: Enter an **IP Address** from **192.168.1.2** to **192.168.1.254** and the **Subnet Mask** to **255.255.255.0**.

11. Click **OK** to save the changes and close the dialog box.
12. Click **Close** twice to close the **Local Area Connection Properties** and **Local Area Connection Status** dialog boxes.

This document is the property of FreeWave Technologies, Inc. and contains proprietary information owned by FreeWave®. This document cannot be reproduced in whole or in part by any means without written permission from FreeWave Technologies, Inc.

2.3 Access the WP201

1. Open a web browser.
2. In the address bar of the browser, enter **192.168.1.1**.

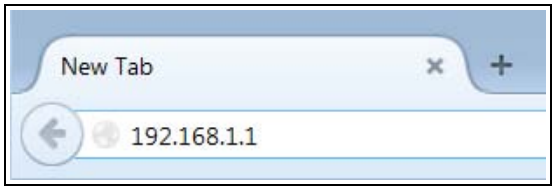

Figure 12: Entered IP Address

3. Press <Enter>.
   The **Login** dialog box opens.
4. Enter the default **Username** and **Password** (**admin** for both) and click **Login**.
   The Device Information window opens.

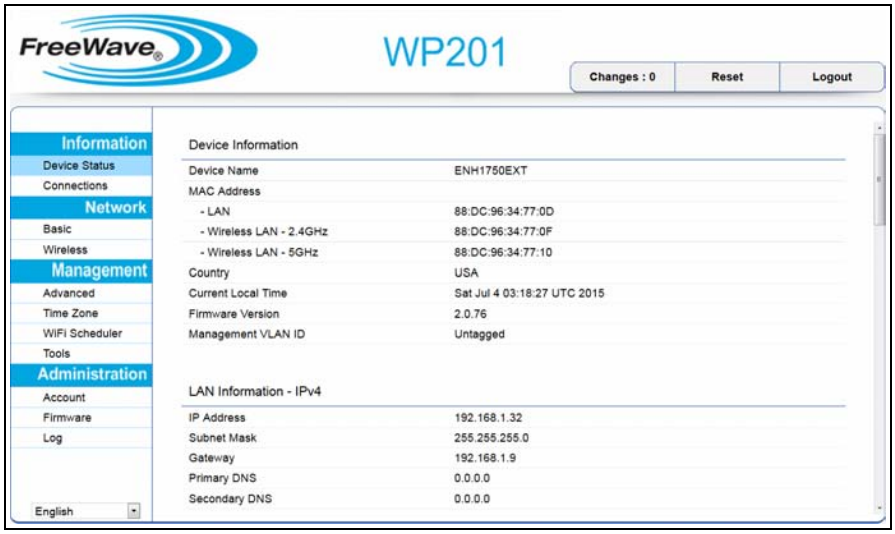

Figure 13: Device Information window

This document is the property of FreeWave Technologies, Inc. and contains proprietary information owned by FreeWave®. This document cannot be reproduced in whole or in part by any means without written permission from FreeWave Technologies, Inc.

2.4 Changing the WP201 Mode

1. In the **Access Panel** on the left, click **Network > Wireless**.
   The Wireless window opens.

Figure 14: Wireless window

2. Click the **Operation Mode** list box arrow for the designated frequency and select the applicable **Mode** for the **WP201**.

   Note: See Modes for detailed information and examples about the different modes.

3. Scroll to the bottom of the window and click **Save**.

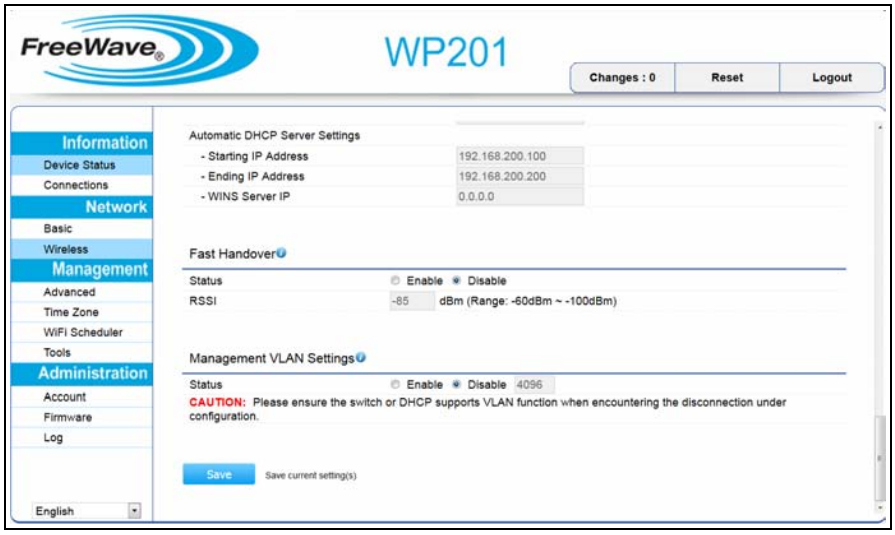

Figure 15: Wireless window

A **Processing** bar appears.

This document is the property of FreeWave Technologies, Inc. and contains proprietary information owned by FreeWave®. This document cannot be reproduced in whole or in part by any means without written permission from FreeWave Technologies, Inc.

The **Wireless Settings** window refreshes.
The **Changes** tab now shows the number of changes to process.

4. Click the **Changes** tab.

Figure 16: Changes tab showing the number of changes

The Unsaved window opens.

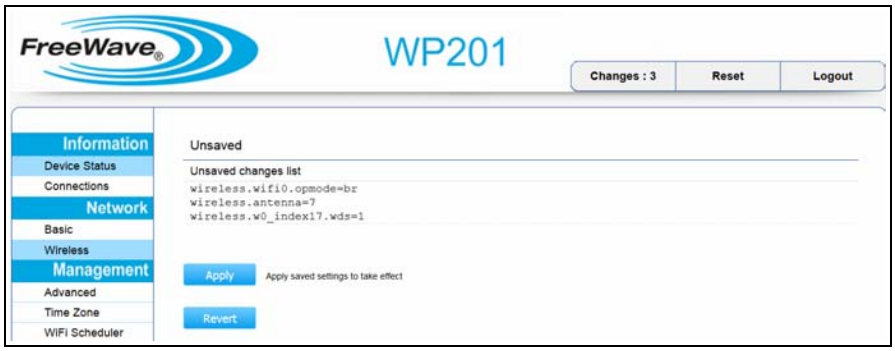

Figure 17: Unsaved window

5. Click **Apply** to implement all the changes made.
   A **Processing** bar appears.
   The Device Information window reappears when the processing is completed.
6. Optional: In the **Access Panel** on the left, click **Network > Wireless** to view the saved changes.
7. Click **Logout** to exit the program.

This document is the property of FreeWave Technologies, Inc. and contains proprietary information owned by FreeWave®. This document cannot be reproduced in whole or in part by any means without written permission from FreeWave Technologies, Inc.

2.5 Wall Mounting the WP201

Tools Needed for this Procedure

- Drill
- 8mm drill bit
- Hammer
- Screwdriver
- Pliers
- Box-end wrenches

Procedure

Note: For illustration purposes, the images in this section DO NOT have the antennas or cables attached to the **WP201**.

1. Using the **Mounting Bracket** as a template, mark the locations of the mounting holes on the wall.

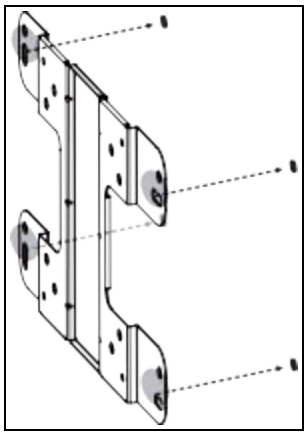

Figure 18: Marked locations of the mounting holes.

2. Drill a 37mm deep, 8mm diameter hole in each of the markings on the wall.
3. Using the bolts in the **Mounting Kit Package**, hammer the bolts into the openings.

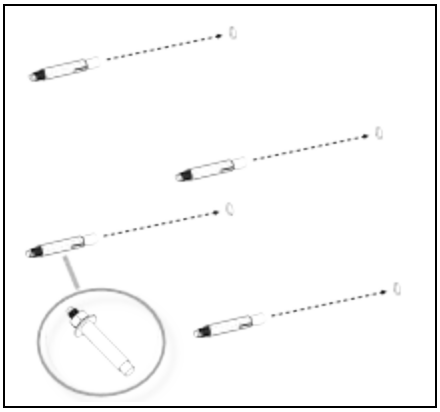

Figure 19: Hammer the bolts into the drilled openings.

This document is the property of FreeWave Technologies, Inc. and contains proprietary information owned by FreeWave®. This document cannot be reproduced in whole or in part by any means without written permission from FreeWave Technologies, Inc.

4. Verify all antennas are attached to their correct ports and the Ethernet cable is connected between the **PoE Injector** and the **WP201**.
5. Using the enclosed **Packaged Ground Screw**, attach the loop end of one of the supplied **Green Ground Cables** to the ground point on the Back of the WP201 (on page 14).

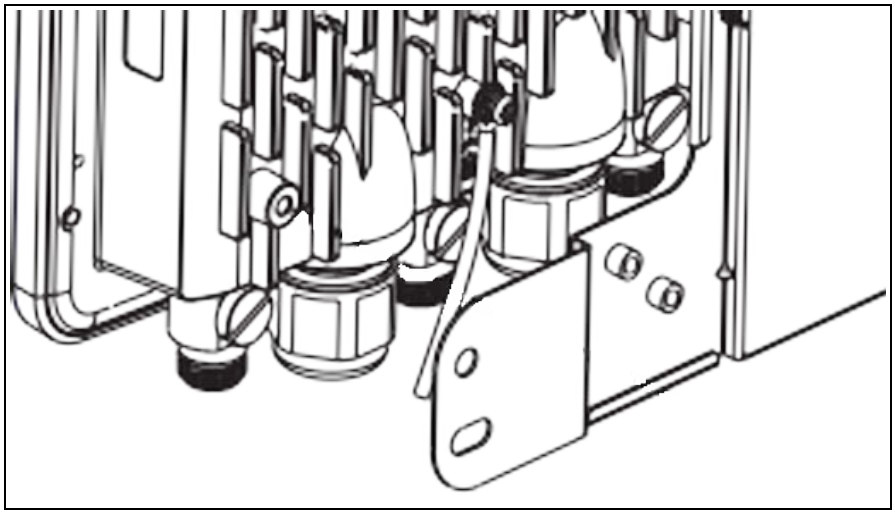

Figure 20: Attached Ground Cable

6. Place the lock and flat washers on the four hex cap screws.

This document is the property of FreeWave Technologies, Inc. and contains proprietary information owned by FreeWave®. This document cannot be reproduced in whole or in part by any means without written permission from FreeWave Technologies, Inc.

7. Insert and tighten the screws to attach the bracket to the Back of the WP201 (on page 14).

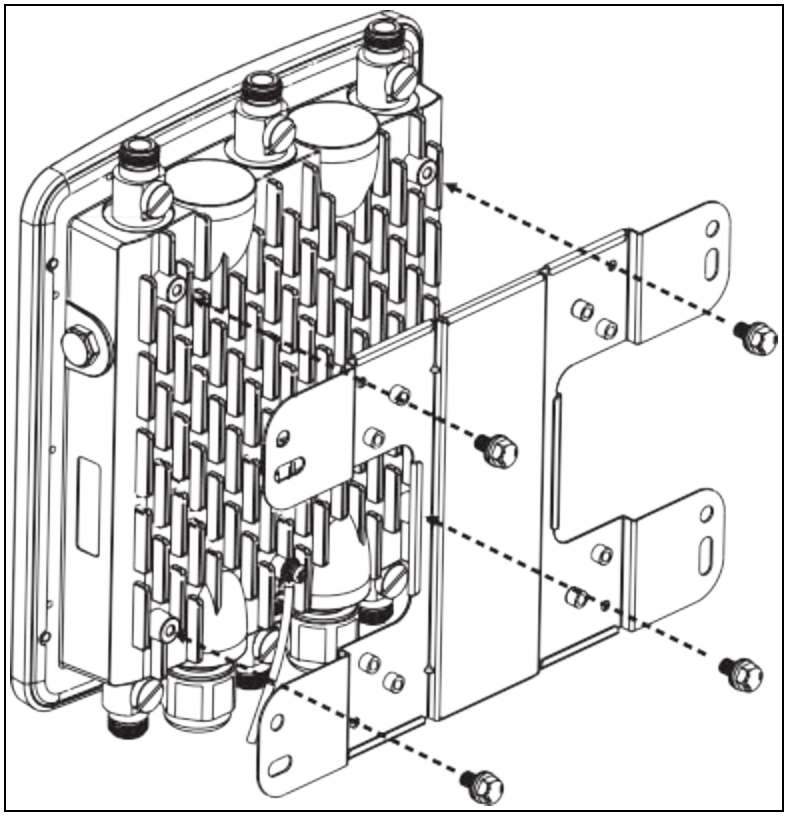

Figure 21: Insert and tighten the screws to attach the bracket.

This document is the property of FreeWave Technologies, Inc. and contains proprietary information owned by FreeWave®. This document cannot be reproduced in whole or in part by any means without written permission from FreeWave Technologies, Inc.

8. Tighten the nut and flat washers to secure the bracket to the mounting surface.

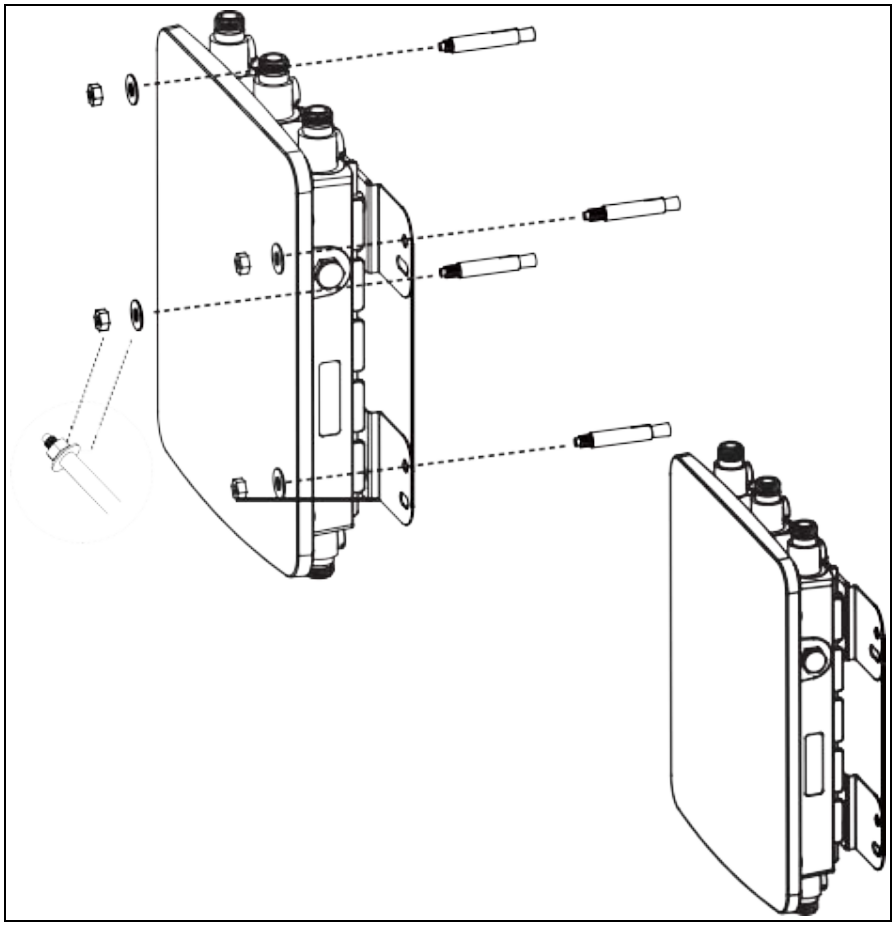

Figure 22: Tighten the nut and flat washers to secure the bracket.

9. Attach the wire end of the Green Ground Cable to a grounding rod (the loop end was attached to the **WP201** in a previous step).

This document is the property of FreeWave Technologies, Inc. and contains proprietary information owned by FreeWave®. This document cannot be reproduced in whole or in part by any means without written permission from FreeWave Technologies, Inc.

2.6 Pole Mounting the WP201

Tools Needed for this Procedure

- Drill
- 8mm drill bit
- Hammer
- Screwdriver
- Pliers
- Box-end wrenches

Procedure

Note: For illustration purposes, the images in this section DO NOT have the antennas or cables attached to the **WP201**.

1. Verify all antennas are attached to their correct ports and the Ethernet cable is connected between the **PoE Injector** and the **WP201**.
2. Using the enclosed **Packaged Ground Screw**, attach the loop end of one of the supplied **Green Ground Cables** to the ground point on the Back of the WP201 (on page 14).

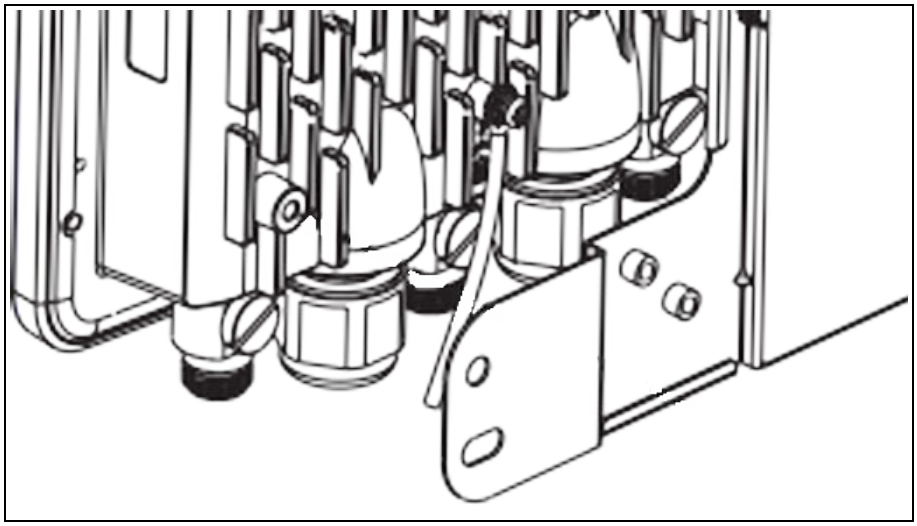

Figure 23: Attached Ground Cable

3. Place the lock and flat washers on the four hex cap screws.

This document is the property of FreeWave Technologies, Inc. and contains proprietary information owned by FreeWave®. This document cannot be reproduced in whole or in part by any means without written permission from FreeWave Technologies, Inc.

4. Insert and tighten the screws to attach the bracket to the Back of the WP201 (on page 14).

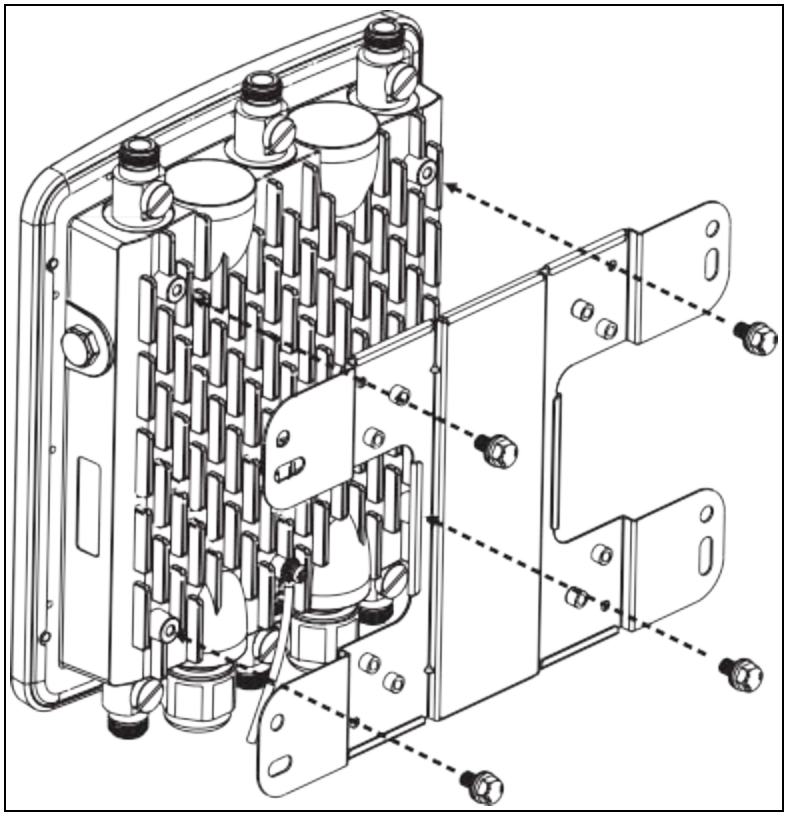

Figure 24: Insert and tighten the screws to attach the bracket.

This document is the property of FreeWave Technologies, Inc. and contains proprietary information owned by FreeWave®. This document cannot be reproduced in whole or in part by any means without written permission from FreeWave Technologies, Inc.

5. Insert and tighten the four round head screws to attach the **Pole Mount Bracket** to the bracket.

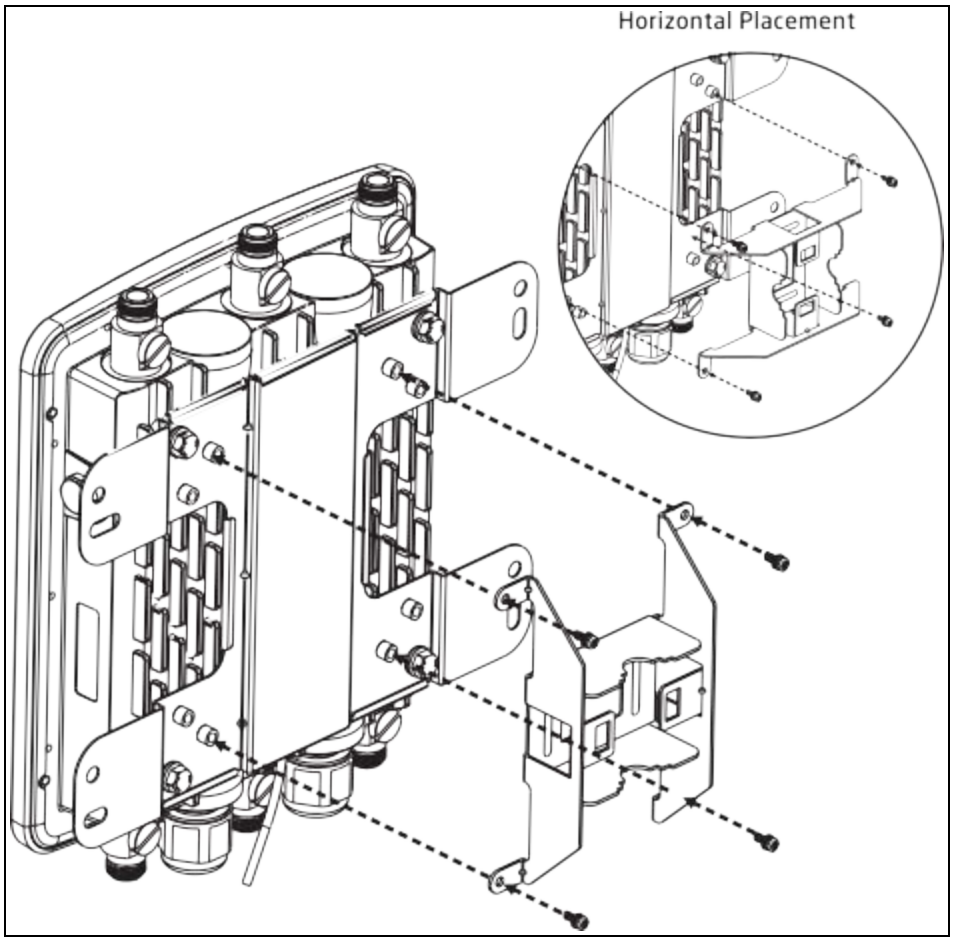

Figure 25: Insert and tighten the four round head screws.

This document is the property of FreeWave Technologies, Inc. and contains proprietary information owned by FreeWave®. This document cannot be reproduced in whole or in part by any means without written permission from FreeWave Technologies, Inc.

6. Thread the open end of the **Pole Strap** through the two tabs on the **Pole Mount Bracket**.

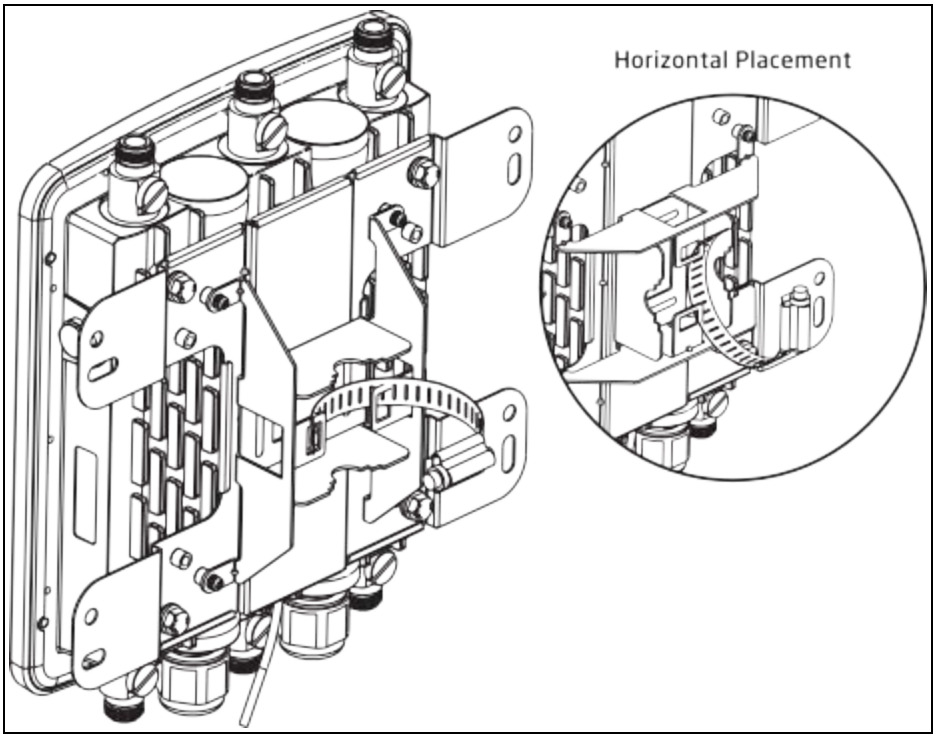

Figure 26: Thread the open end of the Pole Strap.

This document is the property of FreeWave Technologies, Inc. and contains proprietary information owned by FreeWave®. This document cannot be reproduced in whole or in part by any means without written permission from FreeWave Technologies, Inc.

7. Lock and tighten the **Pole Strap** to secure the **Pole Mount Bracket** to the pole.

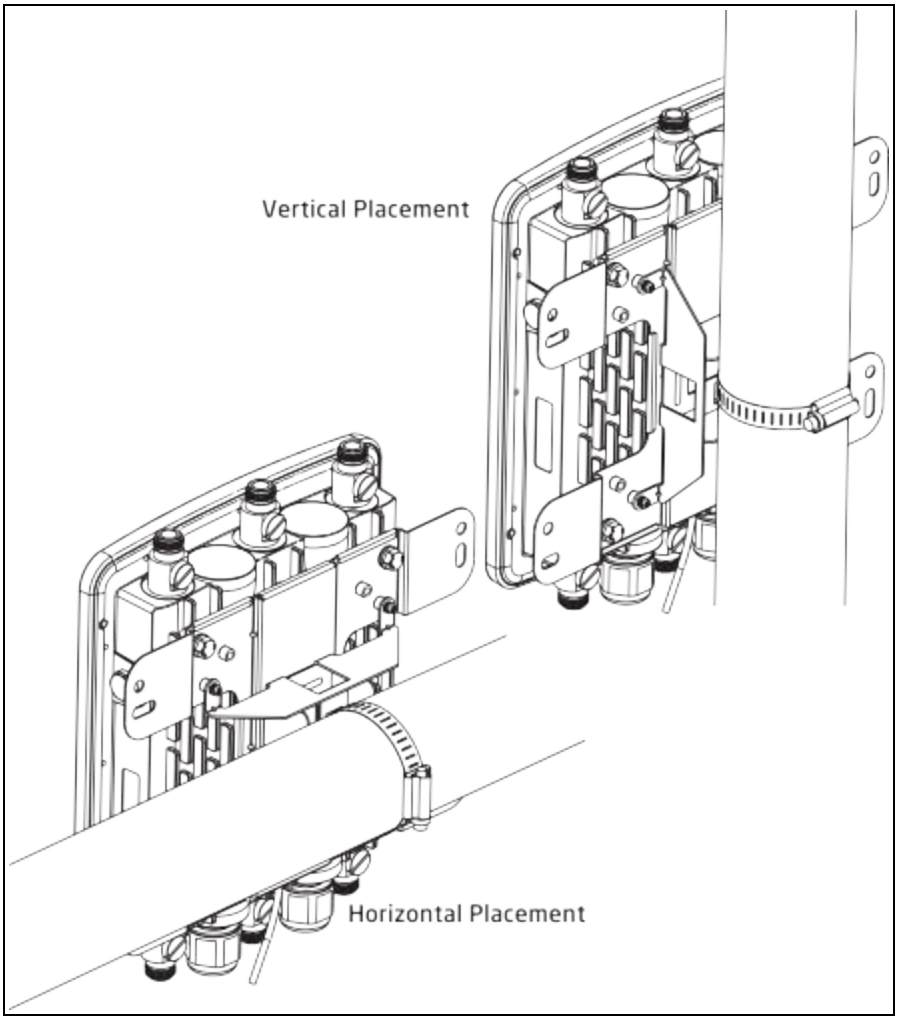

Figure 27: Lock and tighten the Pole Strap.

8. Attach the wire end of the Green Ground Cable to a grounding rod (the loop end was attached to the **WP201** in a previous step).

This document is the property of FreeWave Technologies, Inc. and contains proprietary information owned by FreeWave®. This document cannot be reproduced in whole or in part by any means without written permission from FreeWave Technologies, Inc.

This document is the property of FreeWave Technologies, Inc. and contains proprietary information owned by FreeWave®. This document cannot be reproduced in whole or in part by any means without written permission from FreeWave Technologies, Inc.

Appendix A: WP201 Technical Specifications

Specifications may change at any time without notice. For the most up-to-date specifications information, see the product's data sheet available at www.freewave.com.

WP201 Technical Specifications	
Specification	**Description**
Wireless Interfaces	
Network Configurations	• PTP • PtMP • Fixed Point Mesh • Mobile Mesh
RF Frequency Support	2.41 to 2.47 GHz (ITU ISM band) 5.15 to 5.825 GHz (U-NII & ISM bands)
RF Modulation Technology	OFDM: BPSK, QPSK, 16-QAM, 64-QAM With Adaptive Link
Over the Air Security	WPA, WPA2, WPA-Enterprise, AES - 128, 802.11i
Error Correction	FEC, ARQ
SSID	Multiple
RF Interface	6 N-type Connectors
Antennas	6 External N-type Antennas • 3 x detachable 5 dBi 2.4 GHz omni-directional antennas • 3 x detachable 7 dBi 5 GHz omni-directional antennas

This document is the property of FreeWave Technologies, Inc. and contains proprietary information owned by FreeWave®. This document cannot be reproduced in whole or in part by any means without written permission from FreeWave Technologies, Inc.

WP201 Technical Specifications	
Specification	**Description**
Wired Interfaces	
Network Interface	2 - 10/100/1000 Gigabit Ethernet port with PoE support 2 LAN Ports: • 1 - LAN 1 Port - PoE Input • 1 - LAN 2 Port - PSE Output
LAN / WAN	802.3 and 802.3u, IPv4, TCP, UDP, ICMP DHCP Server and Client, NAT
VLAN	• VLAN Pass-through • VLAN Tag
LAN Security	RADIUS, X.509 Certificates, MAC Filtering with ACL IPsec, AES-128, AES-256, SSH, SSH-2

Management	• Auto Channel Selection
	• Band Steering
	• BSSID
	• Clients Statistics
	• E-Mail Alert
	• Fast Roaming
	• Fast Handover
	• Guest Network
	• MIB:
	  • MIB I
	  • MIB II
	  • Private MIB
	• Multiple SSID:
	  • 16 SSIDs, 8 SSIDs per Radio
	• RADIUS Accounting
	• Save Configuration as User Default
	• SNMP V1/V2c/V3

QoS	802.1e
Power	

Power Requirements	• External Power Adapter on PoE Injector (EPE-48GR), DC IN 48 V/0.8A
	• Power Supply***:
	  • 90 to 240 VDC ± 10%, 50/60 Hz
	  • ***depends on different countries

This document is the property of FreeWave Technologies, Inc. and contains proprietary information owned by FreeWave®. This document cannot be reproduced in whole or in part by any means without written permission from FreeWave Technologies, Inc.

This document is the property of FreeWave Technologies, Inc. and contains proprietary information owned by FreeWave®. This document cannot be reproduced in whole or in part by any means without written permission from FreeWave Technologies, Inc.

FreeWave®