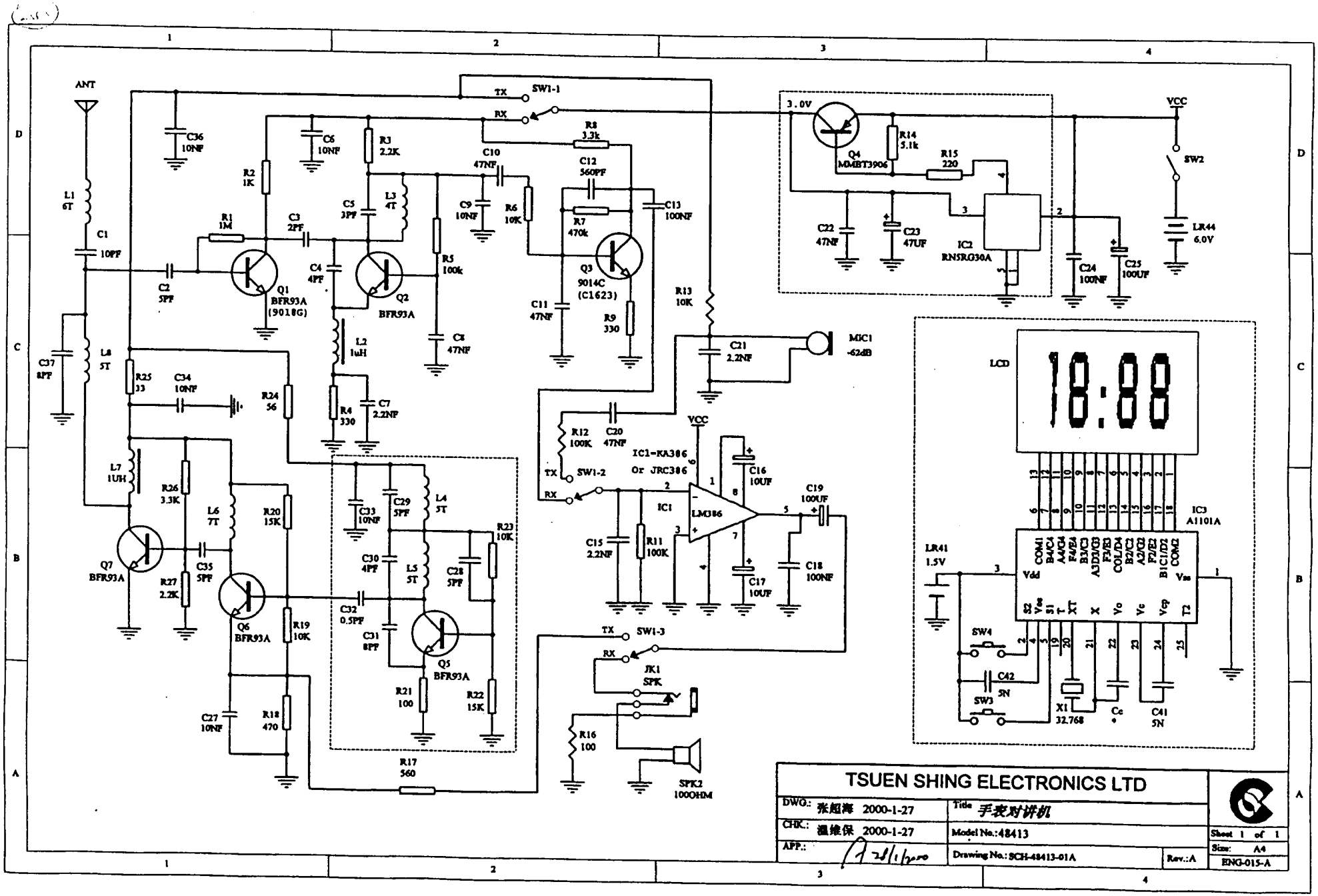
ANT
L1 6T
C1 10PF
C2 5PF
C36 10NF
C37 8PF
L8 5T
R25 33
C34 10NF
R24 56
L7 1UH
R26 3.3K
L6 7T
R20 15K
Q7 BFR93A
R27 2.2K
C35 5PF
Q6 BFR93A
R19 10K
C27 10NF
R18 470
R1 1M
Q1 BFR93A (9018G)
R2 1K
C3 2PF
C6 10NF
R3 2.2K
C5 3PF
L3 4T
C4 4PF
Q2 BFR93A
L2 1uH
R4 330
C7 2.2NF
R5 100k
C8 47NF
C9 10NF
C10 47NF
R6 10K
R8 3.3k
C12 560PF
R7 470k
C13 100NF
Q3 9014C (C1623)
C11 47NF
R9 330
R13 10K
C21 2.2NF
MIC1 -62dB
TX
RX
SW1-1
3.0V
Q4 MMBT3906
R14 5.1k
R15 220
C22 47NF
C23 47UF
IC2 RN5RG30A
VCC
SW2
LR44 6.0V
C24 100NF
C25 100UF
R12 100K
C20 47NF
SW1-2
IC1=KA386 Or JRC386
IC1
LM386
C16 10UF
C19 100UF
C15 2.2NF
R11 100K
C17 10UF
C18 100NF
C33 10NF
C29 5PF
L4 5T
R23 10K
C30 4PF
L5 5T
C28 5PF
C32 0.5PF
C31 8PF
Q5 BFR93A
R21 100
R22 15K
R17 560
SW1-3
JK1 SPK
R16 100
SPK2 100OHM
LCD
18:88
IC3 A1101A
LR41 1.5V
SW4
C42 5N
SW3
X1 32.768
Cc
C41 5N
TSUEN SHING ELECTRONICS LTD
DWG.: 张昭海 2000-1-27
CHK.: 温维保 2000-1-27
APP.:
Title 手表对讲机
Model No.:48413
Drawing No.: SCH-48413-01A
Rev.: A
Sheet 1 of 1
Size: A4
ENG-015-A