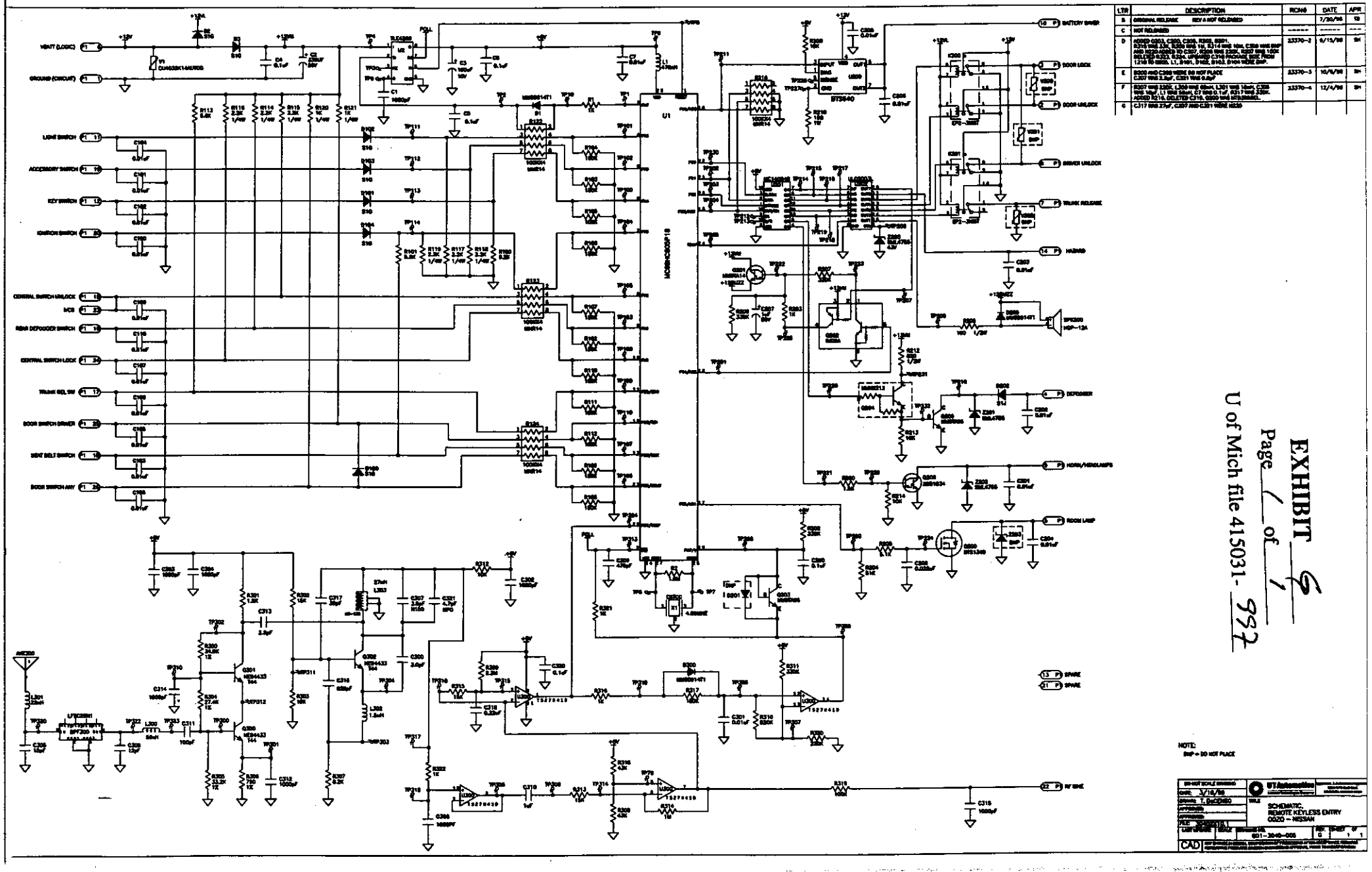
VBATT (LOGIC)
GROUND (CIRCUIT)
LIGHT SWITCH
ACCESSORY SWITCH
KEY SWITCH
IGNITION SWITCH
CENTRAL SWITCH UNLOCK
HCS
REAR DEFOGGER SWITCH
CENTRAL SWITCH LOCK
TRUNK REL SW
DOOR SWITCH DRIVER
SEAT BELT SWITCH
DOOR SWITCH ANY
BATTERY SAVER
DOOR LOCK
DOOR UNLOCK
DRIVER UNLOCK
TRUNK RELEASE
HORNS
DEFOGGER
HORN/HIGHLAMPS
ROOM LAMP
SPARE
SPARE
RF SINE
BT5640
U1
U2
U3
U4
U5
U6
U7
U8
U9
U10
U11
U12
U13
U14
U15
U16
U17
U18
U19
U20
U21
U22
U23
U24
U25
U26
U27
U28
U29
U30
U31
U32
U33
U34
U35
U36
U37
U38
U39
U40

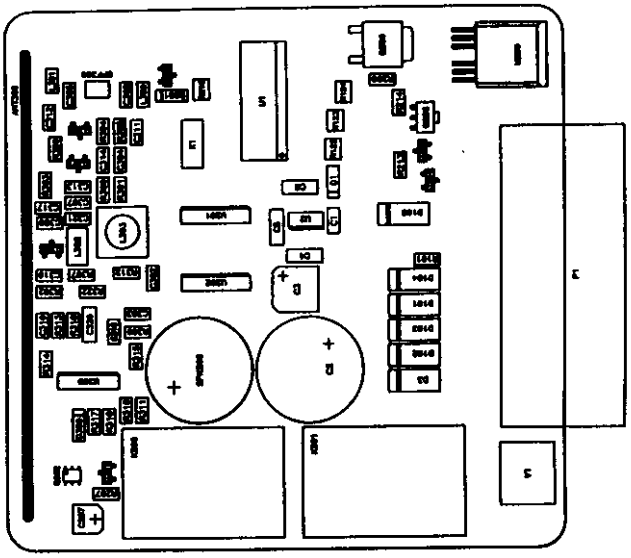

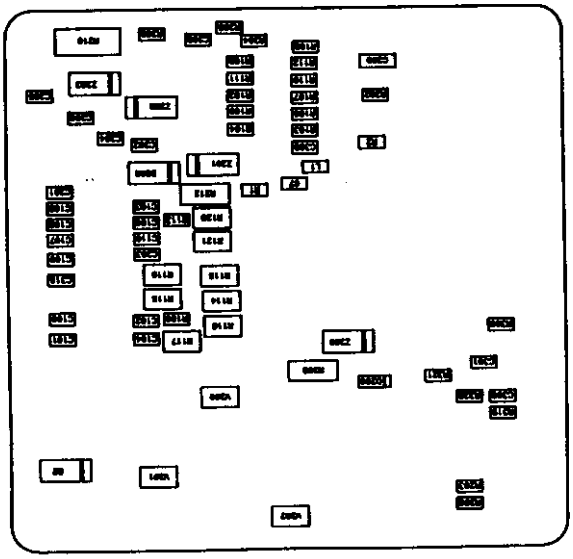

EXHIBIT H

Page 1 of 1

U of Mich file 415031-997