MP18 Probe System

selectable channel radio transmission

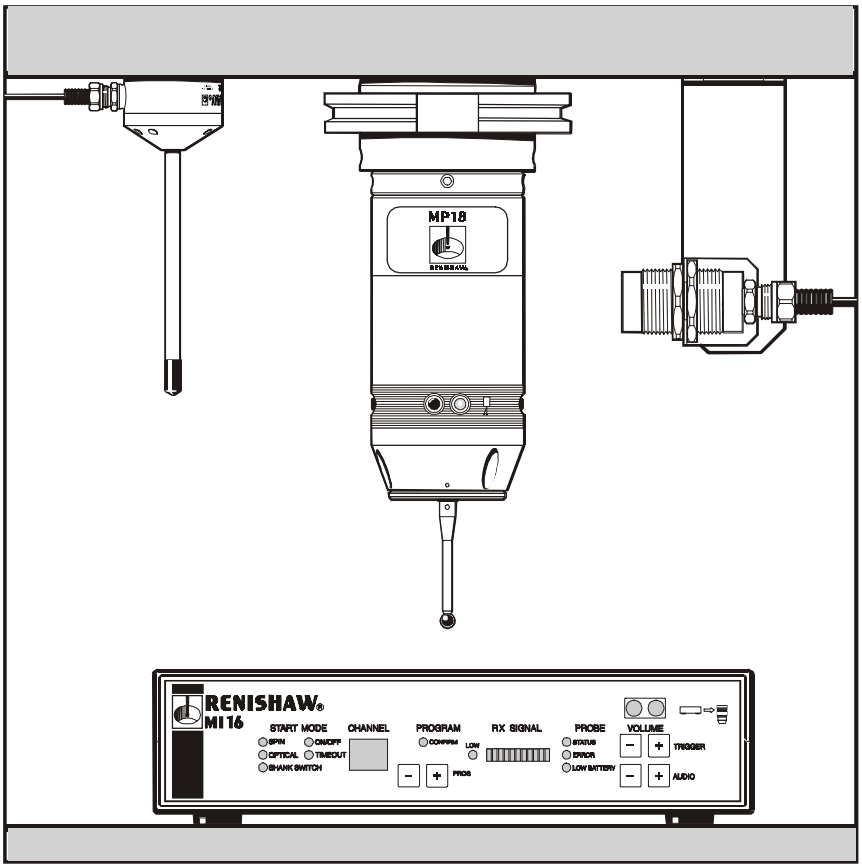

Installation and User's Guide

RENISHAW®

FCC DECLARATION USA

FCC ID: KQG MI16-433

This device complies with Part 15 of the FCC Rules Operation is subject to the following two conditions: (1) This device may not cause harmful interference and (2) This device must accept any interference received including interference that may cause undesired operation.

PATENTS

Features of the MP18 Probe With Channel Selectable Radio Transmission are the subject of the patents and patent applications listed below :

EP	108521	JP	326, 001/1992	US	4, 599, 524
EP	501680	JP	89, 397/1993	US	4, 636, 960
EP	506318	JP	1, 847, 335	US	4, 636, 960
EP	652413	JP	1, 942, 442	US	5, 272, 817

CE

This product has been tested to the following European Standards
I-ETS 300 220 (October 1993)
ETS 300 683 (June 1997)

FCC DECLARATION (USA)

FCC Section 15.19

This device complies with Part 15 of the FCC rules.

Operation is subject to the following two conditions:

1. This device may not cause harmfull interference.
2. This device must accept any interference received, including interference that may cause undesired operation.

FCC Section 15.105

This equipment has been tested and found to comply with the limits for a Class A digital device, pursuant to Part 15 of the FCC rules.

These limits are designed to provide reasonable protection against harmful interference when the equipment is operated in a commercial environment.

This equipment generates, uses, and can radiate radio frequency energy and, if not installed and used in accordance with the instruction manual, may cause harmful interference to radio communications.

Operation of this equipment in a residential area is likely to cause harmful interference, in which case you will be required to correct the interference at your own expense.

FCC Section 15.21

The user is cautioned that any changes or modifications not expressly approved by Renishaw plc, or authorised representative could void the user's authority to operate the equipment.

FCC Section 15.27

The user is also cautioned that any peripheral device installed with this equipment such as a computer, must be connected with a high quality shielded cable to insure compliance with FCC limits.

GB **SAFETY**

Beware of unexpected movement. The user should remain outside of the full working envelope of probe head/extension/probe combinations.

Handle and dispose of batteries according to the manufacturer's recommendations. Use only the recommended batteries. Do not allow the battery terminals to contact other metallic objects.

For instructions regarding the safe cleaning of Renishaw products, refer to the Maintenance section of the relevant product documentation.

Remove power before performing any maintenance operations.

Refer to the machine supplier's operating instructions.

The unit must be supplied from a 24V DC SELV supply complying with the essential requirements of BS EN 61010 or similar specification.

D **SICHERHEITSANWEISUNGEN**

Auf unerwartete Bewegungen achten. Der Anwender soll sich immer außerhalb des Meßtasterkopf-Arm-Meßtaster-Bereichs aufhalten.

Batterien immer gemäß den Anleitungen des Herstellers handhaben und diese vorschriftsmäßig entsorgen. Nur die empfohlenen Batterien verwenden. Die Batterieklemmen nicht in Kontakt mit metallischen Gegenständen bringen.

Anleitungen über die sichere Reinigung von Renishaw-Produkten sind in Kapitel MAINTENANCE (WARTUNG) in der Produktdokumentation enthalten.

Bevor Wartungsarbeiten begonnen werden, muß erst die Stromversorgung getrennt werden.

Beziehen Sie sich auf die Wartungsanleitungen des Lieferanten.

Die Einheit muß von einer Schutzkleinspannungsversorgung mit 24V DC gespeist werden, die den wesentlichen Anforderungen von BS EN 61010 oder einer ähnlichen Norm entspricht.

DK **SIKKERHED**

Pas på uventede bevægelser. Brugeren b¢r holde sig uden for hele sondehovedets/ forlængerens/ sondens arbejdsområde.

Håndtér og bortskaf batterier i henhold til producentens anbefalinger. Anvend kun de anbefalede batterier. Lad ikke batteriterminalerne komme i kontakt med andre genstande af metal.

Se afsnittet MAINTENANCE (VEDLIGEHOLDELSE) i produktdokumentationen for at få instruktioner til sikker reng¢ring af Renishaw-produkter.

Afbryd str¢mforsyningen, f¢r der foretages vedligeholdelse.

Se maskinleverand¢rens brugervejledning.

Enheden skal forsynes fra en 24 V d.c. SELV (Separat ekstra lav spænding) netspænding, der efterlever de vigtige krav i BS EN 61010 eller lignende specifikation.

E **SEGURIDAD**

Tener cuidado con los movimientos inesperados. El usuario debe quedarse fuera del grupo operativo completo compuesto por la cabeza de sonda/ extensión/sonda o cualquier combinación de las mismas.

Las baterías deben ser manejadas y tiradas según las recomendaciones del fabricante. Usar sólo las baterías recomendadas. No permitir que los terminales de las mismas entren en contacto con otros objetos metálicos.

Para instrucciones sobre seguridad a la hora de limpiar los productos Renishaw, remitirse a la sección titulada MAINTENANCE (MANTENIMIENTO) en la documentación sobre el producto.

Quitar la corriente antes de emprender cualquier operación de mantenimiento.

Remitirse a las instrucciones de manejo del proveedor de la máquina.

La unidad debe de ser alimentada desde un alimentador .V c.c. SELV (Tensión Extra Baja Separada) que cumpla con los requisitos esenciales de BS EN 61010 o una especificación similar.

F **SECURITE**

Attention aux mouvements brusques. L'utilisateur doit toujours rester en dehors de la zone de sécurité des installations multiples tête de palpeur/rallonge/palpeur.

Suivre les conseils du fabricant pour manipuler et jeter les batteries. Utiliser uniquement les batteries recommandées. Veiller à ce que les bornes de la batterie n'entrent pas en contact avec d'autres objets métalliques.

Les conseils de nettoyage en toute sécurité des produits Renishaw figurent dans la section MAINTENANCE de votre documentation. Mettre la machine hors tension avant d'entreprendre toute opération de maintenance.

Consulter le mode d'emploi du fournisseur de la machine.

L'appareil doit être alimenté par un courant continu de 24V SELV (voltage ultra-faible séparé), conformément aux exigences primordiales de la norme BS EN 61010 ou d'une spécification semblable.

FIN **TURVALLISUUTTA**

Varo äkillistä liikettä. Käyttäjän tulee pysytellä täysin anturin pään/jatkeen/ anturin yhdistelmiä suojaavan toimivan kotelon ulkopuolella.

Käytä paristoja ja hävitä ne valmistajan ohjeiden mukaisesti. Käytä ainoastaan suositeltuja paristoja. Älä anna paristonapojen koskettaa muita metalliesineitä.

Renishaw-tuotteiden turvalliset puhdistusohjeet löytyvät tuoteselosteen MAINTENANCE (HUOLTOA) koskevasta osasta.

Kytke pois sähköverkosta ennen huoltotoimenpiteitä.

Katso koneen toimittajalle tarkoitettuja käyttöhjeita.

Laite virta on kytkettävä 24V d.c. SELV (Separated Extra Low Voltage - Erotettu erityisen alhainen jännite) -virtaverkkoon standardin BS EN 61010 tai vastaavan spesifikaation asettamien perusvaatimusten

GR ΑΣΦΑΛΕΙΑ

Προσοχή - κίνδονος απροσδόκητων κινήσεων. Οι χρήστες πρ΄πει να παραμενουν εκτός του χώρου που επηρεάζεται από όλους τους συνδυασμού ς λειτυργίας της κεφαλή του ανιχνευτή, της προεκτασης και του ανιχνευτή.

Ο χειρσμός και η απόρριψη των μπαταριών να γίνεται σύμφωνα με τις συστάσεις του κατασκευαστή. Να χρησιμοποιούνται μόνο οι συνιστώμενες μπαταριες. Δεν πρεπει οι ακποδεκτε να ερχονται σε επαφή με άλλα μεταλλικά αντικείμνα.

Για οδηγίες που αφορούν τον ασφαλή καθαρισμό των προϊόντων Renishaw, βλ επετε το κεφάλαιο MAINTENANCE (ΣΥΝΤΗΡΗΣΗ) στο διαφωτιστικό υλικό του προϊόντος.

Αποσυνδεστε το μηχάνημα από το ηλεκτρικό ρεύμα προτού επιχειρήσετε τυχόν εργασίες συντήρησης.

Βλεπετε τις οδηγίες λειτουργίας του προμηθευτή του μηχανήματος.

Η συσκευή θα πρέπει να τροφοδοτείται με συνεχή τάση 24 Βολτ τύπου SELV (Separated Extra Low Voltage - Ανεξάρτητη Ιδιαίτερα Χαμηλή Τάση), σύμφωνα με τις σημαντικότερες απαιτήσεις της Βρετανικής Προδιαγραφής BS EN 61010 ή άλλης παρόμοιας.

I **SICUREZZA**

Fare attenzione ai movimenti inaspettati. Si raccomanda all'utente di tenersi al di fuori dell'involucro operativo della testina della sonda, prolunghe e altre varianti della sonda.

Trattare e smaltire le pile in conformità alle istruzioni del fabbricante. Usare solo pile del tipo consigliato. Evitare il contatto tra i terminali delle pile e oggetti metallici.

Per le istruzioni relative alla pulizia dei prodotti Renishaw, fare riferimento alla sezione MAINTENANCE (MANUTENZIONE) della documentazione del prodotto.

Prima di effettuare qualsiasi intervento di manutenzione, isolare dall'alimentazione di rete.

Consultare le istruzioni d'uso del fabbricante della macchina.

L'unità deve essere alimentata da un'alimentazione di 24V C.C. (Tensione Bassa Separata Extra) conforme agli essenziali requisiti della NS EN 61010 o analoghe specifiche.

NL **VEILIGHEID**

Oppassen voor onverwachte beweging. De gebruiker dient buiten het werkende signaalveld van de sondekop/extensie/sonde combinaties te blijven.

De batterijen volgens de aanwijzingen van de fabrikant hanteren en wegdoen. Gebruik uitsluitend de aanbevolen batterijen. Zorg ervoor dat de poolklemmen niet in contact komen met andere metaalhoudende voorwerpen.

Voor het veilig reinigen van Renishaw produkten wordt verwezen naar het hoofdstuk MAINTENANCE (ONDERHOUD) in de produktendocumentatie. Voordat u enig onderhoud verricht dient u de stroom uit te schakelen.

De bedieningsinstructies van de machineleverancier raadplegen.

De stroomtoevoer naar de eenheid moet gebeuren via een 24V gelijkstroom SELV (Separated Extra Low Voltage - Afzonderlijke extra lage spanning) voeding, overeenkomstig de belangrijkste vereisten van de Britse norm BSEN61010 of een gelijksoortige standaard.

P

SEGURANÇA

Tomar cuidado com movimento inesperado. O utilizador deve permanecer fora do perímetro da área de trabalho das combinações cabeça da sonda/ extensão/sonda.

Manusear e descartar baterias de acordo com as recomendações do fabricante. Utilizar apenas as baterias recomendadas. Não permitir que os terminais da bateria entrem em contacto com outros objectos metálicos.

Para instruções relativas à limpeza segura de produtos Renishaw, consultar a secção MAINTENANCE (MANUTENÇÃO) da documentação do produto.

Desligar a alimentação antes de efectuar qualquer operação de manutenção.

Consultar as instruções de funcionamento do fornecedor da máquina.

A unidade deve ser abastecida de um abastecimento SELV (Separated Extra Low Voltage) (baixa voltagem extra separada) de 24 V. c.d., em conformidade com os requisitos essenciais da norma BS EN 61010 ou de outra especificação semelhante.

SW

SÅKERHET

Se upp för plötsliga rörelser. Användaren bör befinna sig utanför arbetsområdet för sondhuvudet/förlängningen/sond-kombinationerna.

Hantera och avyttra batterier i enlighet med tillverkarens rekommendationer. Använd endast de batterier som rekommenderas.
Låt ej batteriuttagen komma i kontakt med andra metallföremål.

För instruktioner angående säker rengöring av Renishaws produkter, se avsnittet MAINTENANCE (UNDERHÅLL) i produktdokumentationen.

Koppla bort strömmen innan underhåll utförs.

Se maskintillverkarens bruksanvisning.

Enheten måste strömförsörjas från en SELV-källa (Separated Extra Low Voltage - Separat extra låg spänning) på 24 volt likström, som uppfyller huvudkraven i BS EN 61010, eller motsvarande specifikation.

CONTENTS

	Page No.
SYSTEM DESCRIPTION	
System description	9
Features	9
System operation	9
System components	10
System specification	11
MP18 and MP18-S PROBES	
MP18 probe/shank	12
MP18-S probe/shank	13
MP18 probe/shank assembly	14
MP18 stylus on centre adjustment	14
MP18-S stylus on centre adjustment	15
RMM2 ANTENNA	
Operating envelope and installation	16
MI16 INTERFACE	
MI16 front panel	18
MI16 rear panel	19
MI16 audio diagnostics	20
MI16 output waveforms	20
MI16 panel mounting kit	20
PSU3 POWER SUPPLY UNIT	21
OM16 OPTICAL MODULE	22
MI18 BATTERY POWER	24
MODES OF OPERATION	25
MODE AND CHANNEL SELECTION	26
PROGRAMMING THE MI16 INTERFACE	26
RADIO FREQUENCY AND CHANNEL SEPERATION	27
PROGRAMMING THE PROBE RMP3 MODULE	28
MAINTENANCE	
Stylus spring pressure adjustment	29
Diaphragm inspection and replacement	30
Screw torque values	31
PARTS LIST	32-33
ADDENDUM 1 - compatibility with other systems	34
ADDENDUM 2 - shank manufacture for MP18	35
ADDENDUM 3 - selection of MI16 sensitivity	36

SYSTEM DESCRIPTION

The MP18 Probe is used for job set up and workpiece measurement on CNC machine tools. Signal transmission between transmitters and recievers is non line of sight. The radio channel is selectable and signal transmission range is up to distances of 3m (9.8ft).

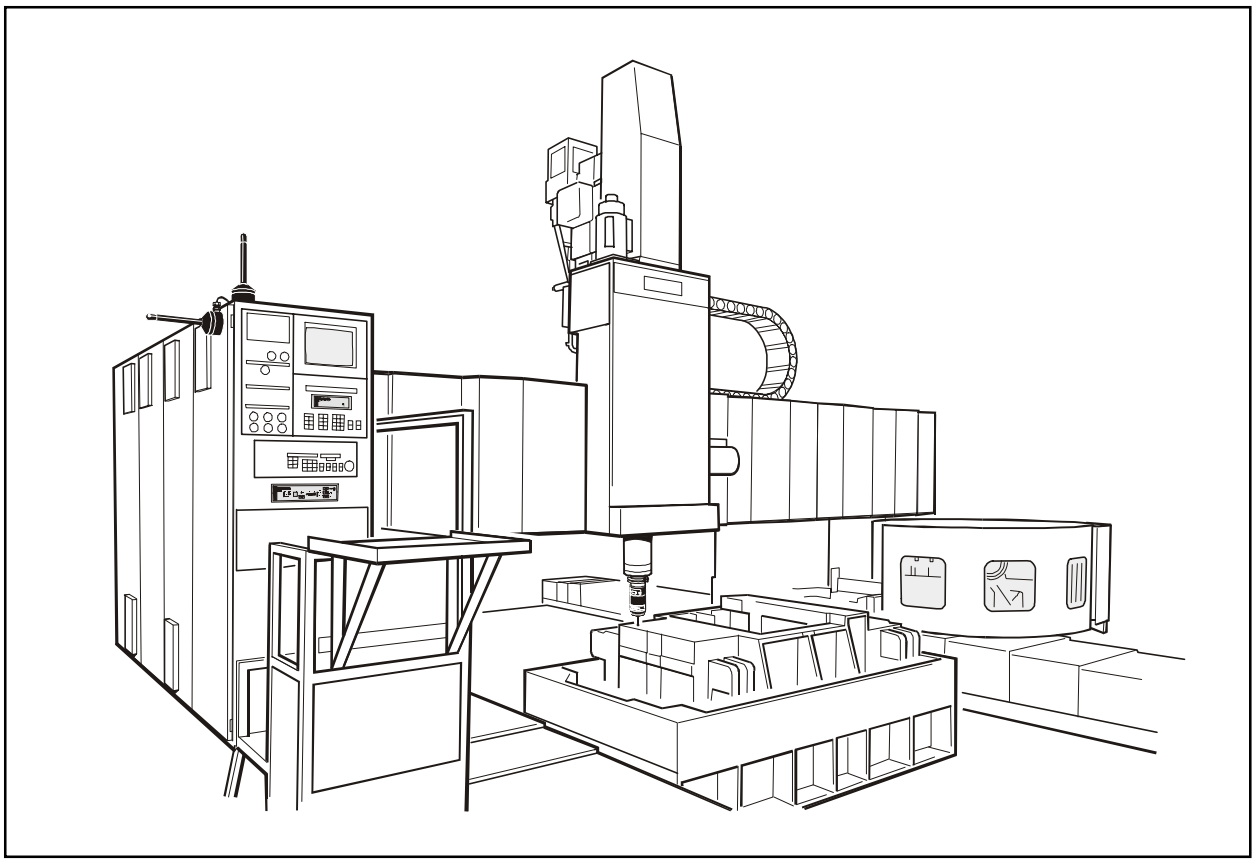

FEATURES

- Transmission of the probe trigger signal using FM radio transmission at 433MHz frequency.
- User selection of the transmission channel (up to 69 available), permits many systems to operate in close proximity, with no interference between systems.
- Switch on - switch off mode.
- Two receivers to provide cover for signal transmission dead spots.
- M code switch on and off of the probe, using an optional optical transmitter module (OM16).

SYSTEM OPERATION

The probe assembly is stored in the machine tool changer as any other tool, and is transferred to the machine spindle for probing routines.

The probe head acts as an omni-directional switch and is effective in the ± X, ±Y and +Z directions.

During operation, the probe stylus is driven against a workpiece feature. On contact the radio module probe (RMP3) transmits a probe signal to the two radio modules machine (RMM2), using frequency modulated (FM) radio waves.

The signal then passes via cable to the MI16 interface and onto the CNC machine control, thereby recording the stylus contact position in the machine tool registers. Two different contact positions enable features to be measured.
Probing software is available from Renishaw

SYSTEM COMPONENTS

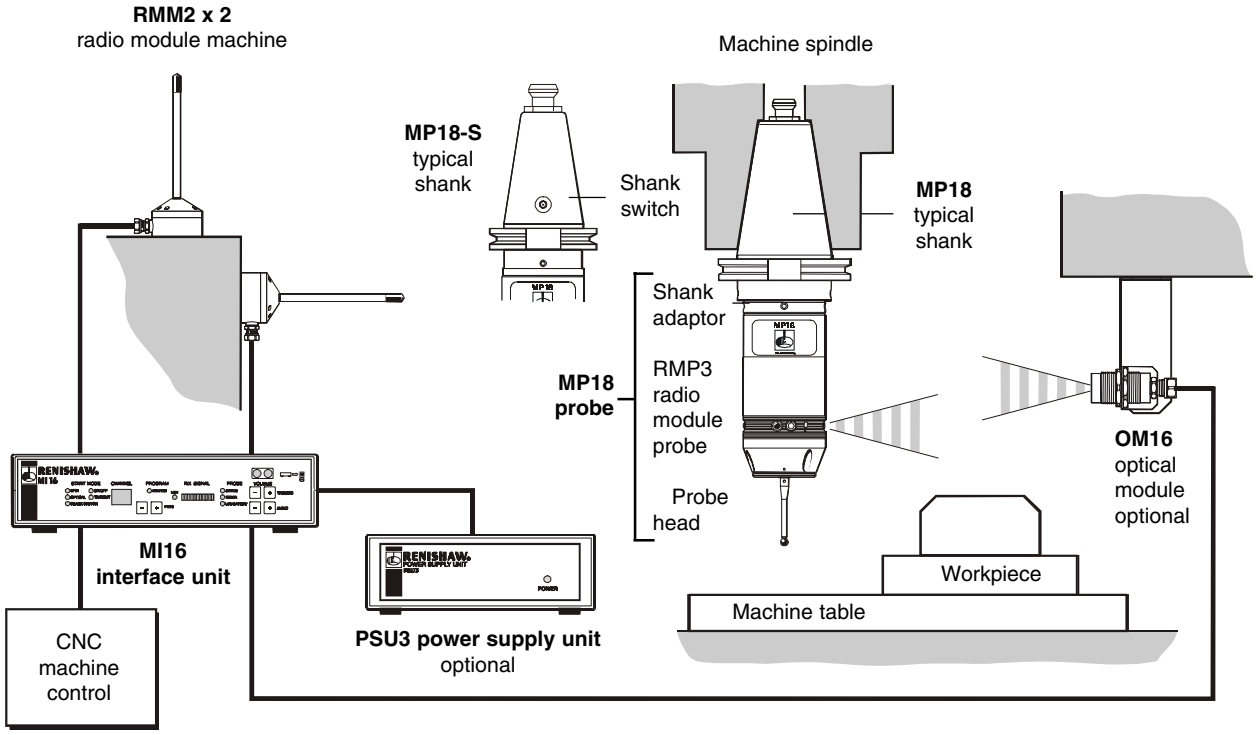

COMPONENT	DESCRIPTION
MP18 probe **Shank for MP18**	Probe head + RMP3 radio module probe + shank adaptor for MP18. Probe ready shanks are available from Renishaw.
MP18-S probe **Shank for MP18-S**	Probe head + RMP3 radio module probe + shank adaptor for MP18 -S. Custom shanks are supplied on application to Renshaw Custom Products Department. MP18-S shanks incorporate a shank switch which switches the probe on, when it is placed in the machine spindle.
MP18 shank adaptor **MP18-S shank adaptor**	Probe to shank adaptor plate (Part No. A-2107-0031). Probe to shank adaptor plate (Part No. A-2249-0134).
RMM2 with side or rear cable exit	Radio Module Machine - transmits and receives signals between machine control and Radio Module Probe (RMP3).
MI16 **machine interface**	Signals received by the RMM2, pass via coaxial cable to the MI16 machine interface, which decodes and converts them into solid state relay (SSR) outputs for use by the machine tool's CNC controller.
OM16 - optional **optical module**	An M code causes the OM16 optical transmission module, to send probe switch on/off signal to the RPM3.
PSU3 - optional **power supply unit**	The MI16 draws 24V DC power from the CNC machine and presents a load of up to 500mA. If this supply is not available from the machine power can be supplied by a Renishaw PSU3 power supply unit.

SPECIFICATION

dimensions mm (in)

PROBE REPEATABILITY

Maximum 2 Sigma (2σ) Value

Repeatability of 1,0µm (0.00004in) is valid for test velocity of 480mm/min (1.57ft/min) at stylus tip, using stylus 50mm (1.97in) long.

SENSE DIRECTIONS and STYLUS TRIGGER FORCE

Set at factory using stylus 50mm (1.97in) long. X and Y trigger forces vary around the stylus seating.

X and Y direction - lowest force	0,75N 75gf (2.64oz)
X and Y direction - highest force	1,4N 140gf (4.92oz)
Z direction force	4,9N 490gf (17.28oz)

PROBE SEALING

IPX8 (BS 5490, IEC 529) 100kPa (1 atmosphere).

SYSTEM DELAYS

The time delay from the probe stylus contacting the workpiece, and the MI16 machine interface providing an output signal to the CNC controller is 12ms ±10µs.

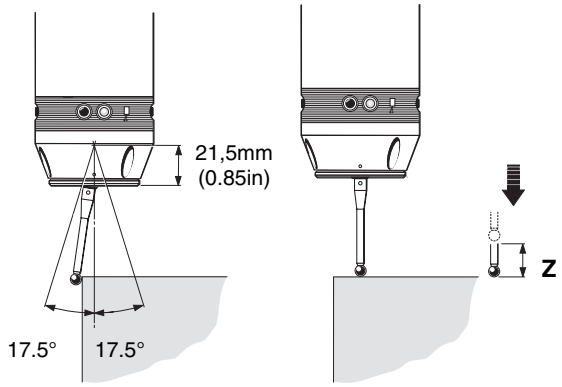

X/Y

STYLUS OVERTRAVEL LIMITS

Stylus length	X - Y	Z
50mm (1.96in)	21,5mm (0.84in)	8mm (0.31in)
100mm (3.93in)	36,5mm (1.43in)	8mm (0.31in)

ENVIRONMENT

PROBE/RMP3 RMM2 MI16 INTERFACE OM16	TEMPERATURE
Storage	-20°C to 60°C (-4°F to 140°F)
Operating	0°C to 40°C (32°F to 104°F)

RADIO FREQUENCIES and TRANSMISSION RANGE

Region	Nominal transmission frequency	Number of transmission channels	Channel separation	Transmission range
USA	433 MHz	69	25 KHz	3m (9.8ft)

MP18

dimensions mm (in)

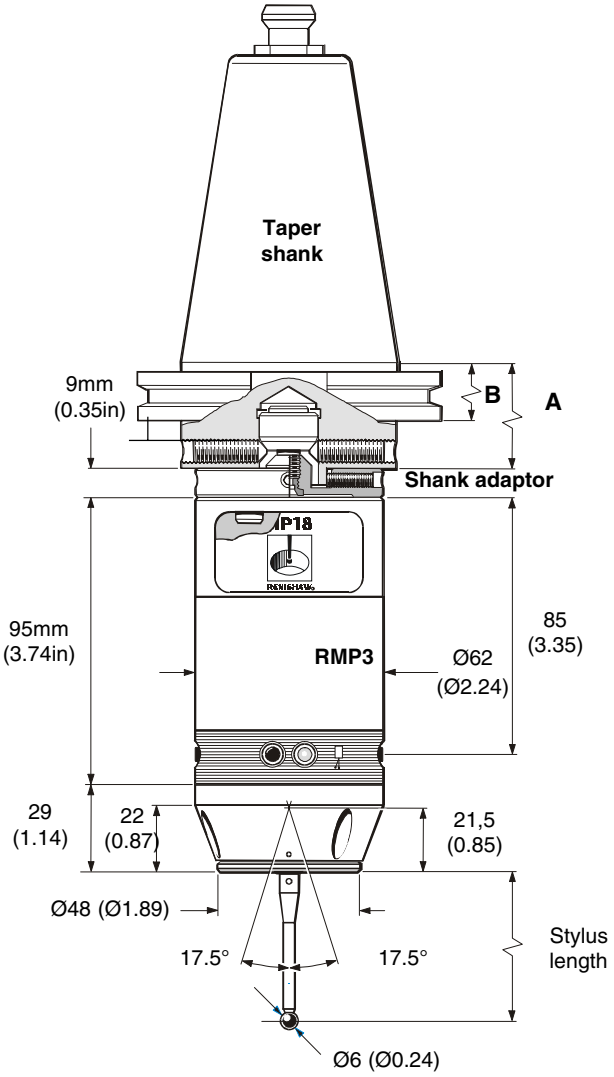

TAPER SHANK

The shank is attached to the RMP3 using a shank adaptor. Part No. A-2107-0031.

The method of attachment is the same as used for other Renishaw probes (MP7, MP8, MP9 and MP10 compact optical probes).

Shank assembly is shown on page 14.

Probe ready shanks are available from Renishaw.

Shank modification details for shanks obtained from other sources are given on page 35.

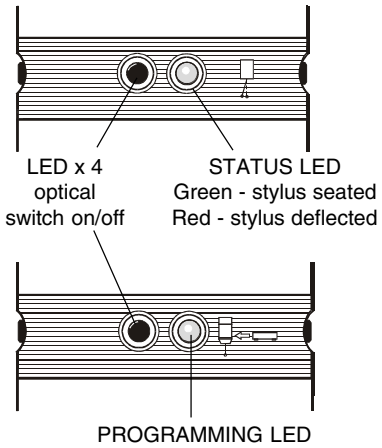

Probe-ready shanks available from Renishaw

Please quote the Part No. when ordering equipment

Shank	Part No.	Taper	A	B
DIN 2080	M-2045-0132	30	20,0 (0.787)	9,6 (0.378)
	M-2045-0024	40	13,6 (0.535)	11,6 (0.457)
	M-2045-0025	45	15,2 (0.598)	15,2 (0.598)
	M-2045-0026	50	15,2 (0.598)	15,2 (0.598)
DIN 69871	M-2045-0064	30	35,25 (1.388)	19,0 - 19,1 (0.748 - 0.752)
	M-2045-0065	40	35,25 (1.388)	19,0 - 19,1 (0.748 - 0.752)
	M-2045-0066	45	35,25 (1.388)	19,0 - 19,1 (0.748 - 0.752)
	M-2045-0067	50	35,25 (1.388)	19,0 - 19,1 (0.748 - 0.752)
ANSI B5.50 1985 (CAT)	M-2045-0137	40	35,25 (1.388)	19,0 - 19,1 (0.748 - 0.752)
	M-2045-0138	45	35,25 (1.388)	19,0 - 19,1 (0.748 - 0.752)
	M-2045-0139	50	35,25 (1.388)	19,0 - 19,1 (0.748 - 0.752)
BT	M-2045-0077	30	27,5 (1.083)	27,5 (1.083)
	M-2045-0027	40	32,0 (1.260)	32,0 (1.260)
	M-2045-0038	45	33,0 (1.299)	33,0 (1.299)
	M-2045-0073	50	38,0 (1.496)	38,0 (1.496)

These shanks are not suitable for the MP18-S probes which use a dedicated shank incorporating a shank switch.

MP18-S

dimensions mm (in)

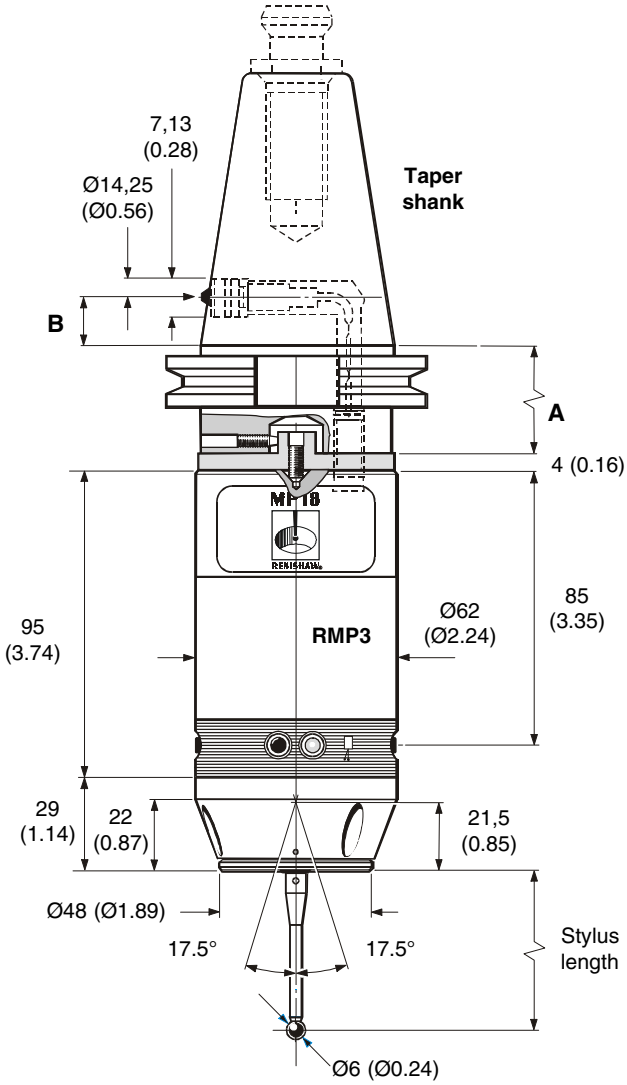

TAPER SHANK

Complete probe/shank units are supplied by Renishaw. These shanks incorporate a switch.

The shank is attached to the RMP3 using a shank adaptor. Part No. A-2249-0134.

The method of attachment is shown on page 15.

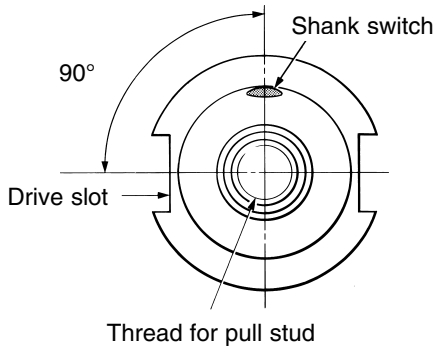

To save battery life, the shank switch must NOT be depressed, during the time the probe is held in the tool store.
It may be nesessary to provide a storage location with a clearance around the switch.

Orders placed for MP18-S probes require a separate quotation and price.
Please contact Renishaw Custom Products Department.

SHANKS AVAILABLE

Shank type	ISO taper	Dimensions A		Dimensions B	
BT	40	35	(1.38)	14	(0.55)
BT	50	50	(1.97)	24	(0.94)
ANSI B5.50 - 1985 (CAT)	40	35	(1.38)	14	(0.55)
ANSI B5.50 -1985 (CAT)	50	65	(2.56)	36,8	(1.45)
DIN 69871	40	50,6	(1.99)	14	(0.55)
DIN 69871	50	50,6	(1.99)	36,8	(1.45)
✻ ANSI (CAT) MODIFIED	40	35	(1.38)	14	(0.55)
✻ ANSI (CAT) MODIFIED	50	65	(2.56)	36,8	(1.45)

✻ These shank specifications are for certain Cincinatti Milacron machines.
Generally to ANSI B5.50 - 1985 (CAT), but with a metric thread for the pull stud.

MP18 PROBE/ADAPTOR PLATE/SHANK ASSEMBLY STYLUS ON-CENTRE ADJUSTMENT

Adaptor plate A-2107-0031

Special short arm hexagon key 4mm AF

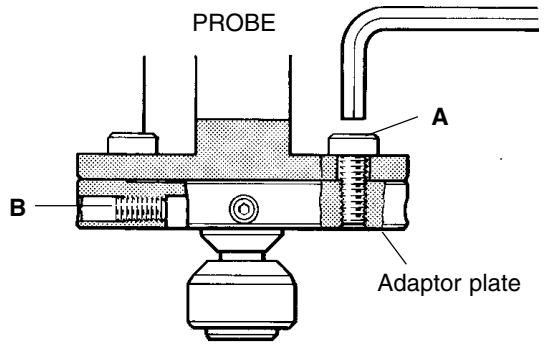

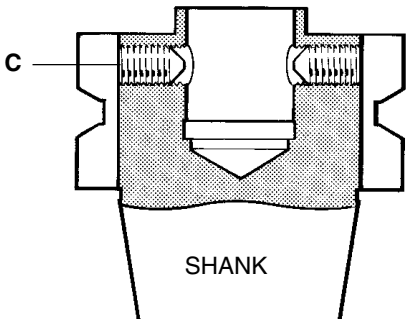

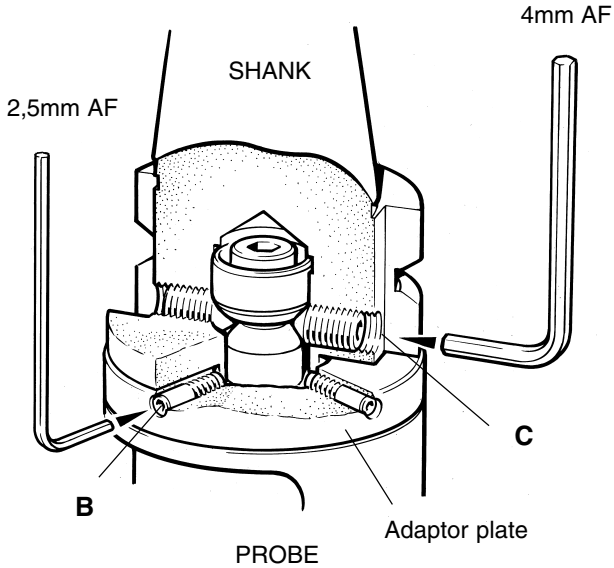

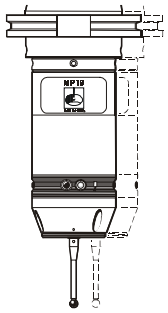

PROBE/SHANK MOUNTING

1. Remove battery covers and battery - see opposite.
2. Tighten probe/adaptor plate screws **A** to 5.1 Nm (3.76 lbf.ft) using special 4mm AF hexagon key (supplied in tool kit).
3. Fully slacken four screws **B**.
4. Grease two screws **C**, and fit into shank.
5. Fit probe onto the shank, and visually position the probe centrally relative to the shank. Partially tighten screws **C** to 2 - 3 Nm (1.47 - 2.2 lbf.ft).
6. Mount the probe/shank assembly into machine spindle.

STYLUS ON-CENTRE ADJUSTMENT

7. Each of the four screws **B** will move the probe relative to the shank, in the X or Y direction as pressure is applied. Tighten individually, backing off after each movement.
8. When the stylus tip run-out is less than 20µm, fully tighten screws **C** to 6 - 8 Nm (4.4 - 5.9 lbf.ft).
9. For final centering use screws **B** to move the probe, progressively slackening on one side and tightening the opposite screw, as the final setting is approached, using two hexagon keys. Tip run out of 5µm (0.0002 in) should be achievable.
10. It is important that all four screws **B** are tight or tightened to 1,5 - 3,5 Nm (1.1 - 2.6 lbf.ft) once the final setting has been achieved.
11. When on-centre adjustment is completed, replace battery and covers - see opposite.

Note :

1. DURING ADJUSTMENT CARE SHOULD BE TAKEN NOT TO ROTATE THE PROBE RELATIVE TO THE SHANK.
2. IF A PROBE/SHANK UNIT IS ACCIDENTALLY DROPPED, IT SHOULD BE CHECKED FOR ON-CENTRE POSITION.
3. DO NOT HIT OR TAP THE PROBE TO ACHIEVE ON-CENTRE ADJUSTMENT.

MP18-S STYLUS ON-CENTRE ADJUSTMENT

Complete units are supplied on application to
Renishawn Custom Products Department

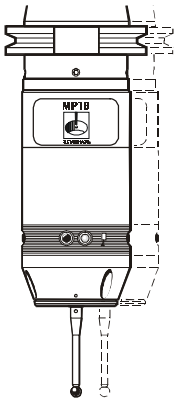

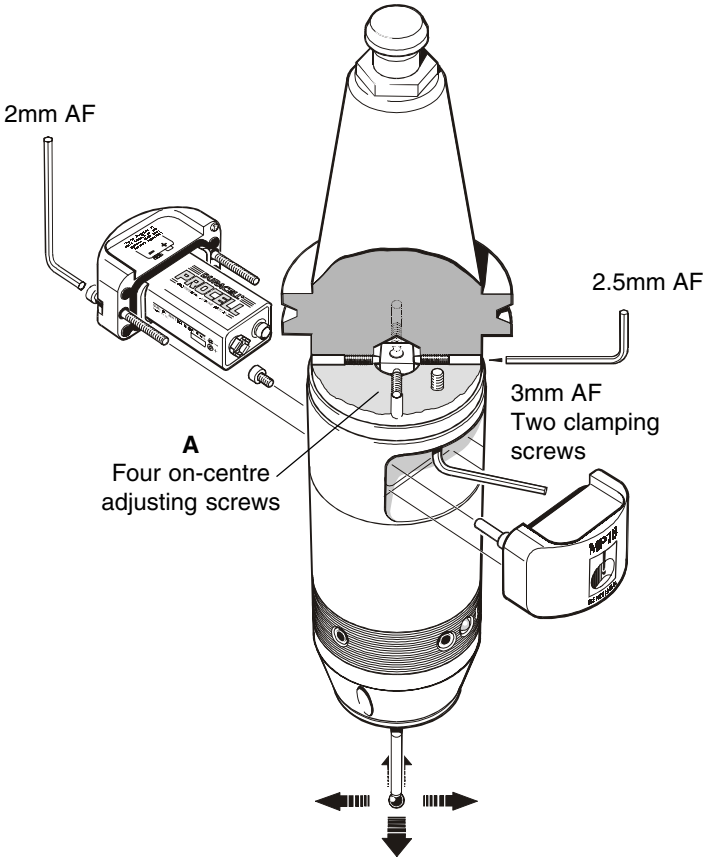

STYLUS ON-CENTRE ADJUSTMENT

1. If adjustment is required, remove the battery covers and battery.
2. Slacken the two probe/shank clamping screws half of one turn, so that the disc washers maintain a slight clamping grip.
3. There are four adjusting screws **A**. Each will move the probe relative to the shank, in the X or Y direction as pressure is applied.
   Tighten individually. Back off after each movement.
4. When stylus target position is obtained, tighten all screws - see page 30.
5. Replace battery and battery covers.

MP18 and MP18-S STYLUS ON-CENTRE ADJUSTMENT

Stylus alignment with the spindle centre line need only be approximate, except in the following circumstances.

1. When probe vector software is used.
2. When the machine control software cannot compensate for an offset stylus.
3. The stylus must be parallel to the spindle axis to prevent stylus stem contact against the side of deep holes.

How to check stylus position

Mount the probe in the machine spindle and use one of the following procedures.

1. Rotate stylus close to a reference surface, check if the gap is constant.
2. Rotate stylus against low force dial test indicator, which does not unseat the probe.
3. Use method advised by machine tool supplier.

RADIO MODULE MACHINE (RMM2)

Cable side exit and rear exit versions are available

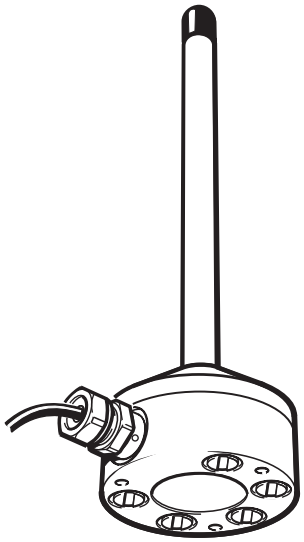

RMM2 RADIO ANTENNA
The RMM2 receives radio signals from the probe, and passes the signals via a 10m (32ft) coaxial cable to the MI16 interface.

Two RMM2 units are supplied with each system. The system can operate with a single RMM, but there may be areas where the radio signal is weak. This is a characteristic of all radio systems. The second RMM2 is positioned to provide good reception over the probes full working area.

SIGNAL TRANSMISSION ENVELOPE
Radio signals can be transmitted and recieved up to distance of 15 metres (49ft), in any direction. Distances greater than this may be achievable under certain circumstances.

Line of sight between the RMP3 and the RMM2 is not required and the signal can still be received with the RMP3 fully enclosed in a bore.

Systems operating on the same channel should be seperated by a distance of 100m (328ft), to avoid interference with each other.

OPERATING ENVIRONMENT
It is important that the environment is free from interference at the chosen transmission frequency. Devices that may make operation difficult include arc welders, pagers, remote control keys, mobile phones or another radio probe operating on the same channel.

An audio monitoring facility is provided to diagnose causes of interference - see page 18.

RMM2 MOUNTING
Select a flat, metallic surface, ideally away from corners and bulkheads.

The base of each RMM2 incorporates five permanent magnets to allow temporary attachment to a metal surface.

Alternatively three clearance holes are provided within the base for M4 fixing screws -10mm long for permanent installation.

RMM2 POSITIONING
Each RMM2 must be installed with care in order to receive as strong and reliable a signal as possible from the probe/RMP3 transmission module.

To guarantee reliability, the MI16 Interface has two independent reception circuits, each support one antenna (RMM2). Radio waves are a coherent form of energy, and reflected signals may add or subtract to the performance, resulting in no signal in some positions. To avoid this, a second RMM2 is recommended.

Commence by connecting a single RMM2 to the MI16 interface. Position the RMM2 as close as possible to the working envelope. Activate the probe/RMP3.

The strength of the radio transmission signal is observed using the MI16 interface front panel Rx signal display - see page 18 item 6. Move the probe around the working envelope and observe the RX signal display. Identify positions in the working envelope where the signal is weak or disappears. A satisfactory signal is indicated by the RX display signal bars remaining green.

SIDE EXIT CABLE

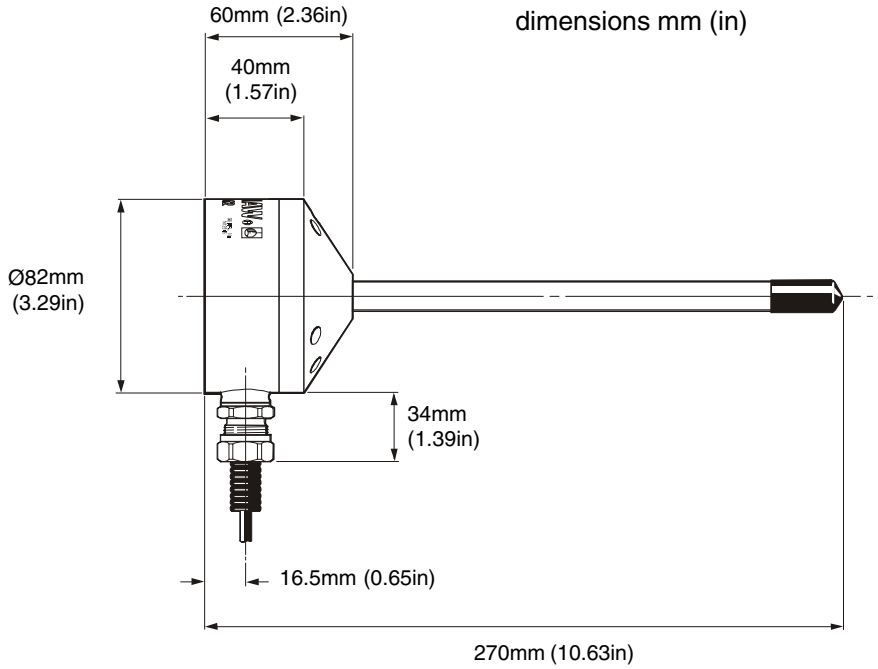

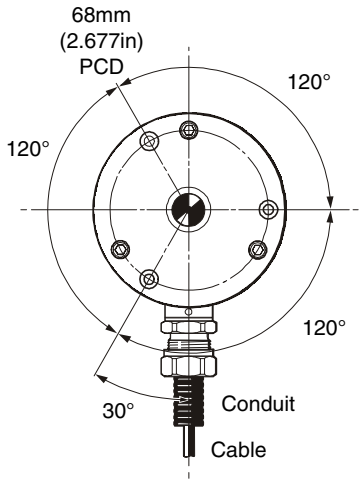

Top view

The cable must be protected from the machine environment by suitable conduit.
(Thomas and Betts SHURESEAL 1/4in, Part No TBEF 0250-50, or equivalent).

REAR EXIT CABLE

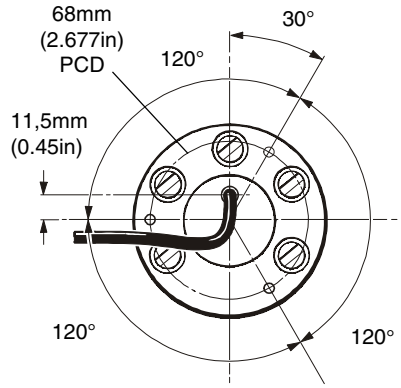

Rear view

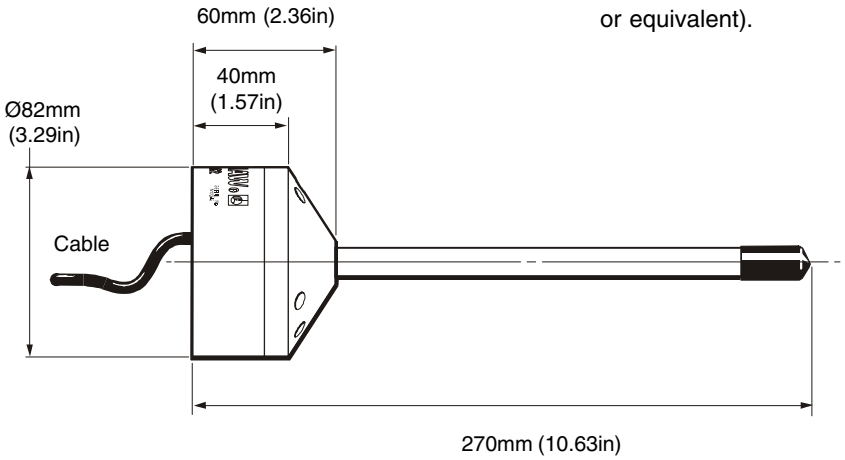

Disconnect the RMM2 antenna and connect the second RMM2 cable to either of the MI16 antenna inputs.

Position the second RMM2 such that the regions of weak signal do not coincide with those observed with the first RMM2. A good solution is to mount antennae at 90° to each other.

Once a suitable position has been established, reconnect the first RMM2 and the system is ready for use.

MI16 INTERFACE

dimensions mm (in)

The MI16 interface converts probe signals into an acceptable form for the CNC machine control.

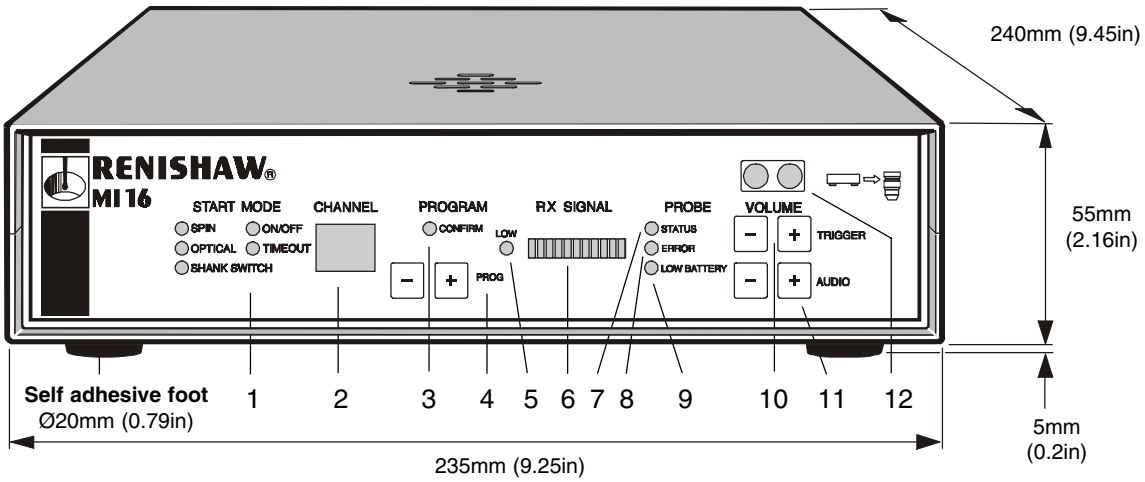

MI16 front panel LED's display the switch on/off mode, RMP3 program status, signal strength, and probe status.
It also provides buttons to select the signal transmission channel and audio volume.

1 **START MODE**
The selected start mode is indicated by a lit LED.

2 **CHANNEL**
The display shows the selected transmission channel.

3 **PROGRAM CONFIRM**
The LED lights to indicate the successful programming of the RMP3 transmission channel and start mode.

4 **PROGRAM BUTTONS**
Buttons used to select the required transmission channel and start mode for programming of the RMP3.

5 **LOW Rx SIGNAL LED**
Lit when the received signal is too low (3 or less bargraph segments lit).

6 **Rx SIGNAL**
Indicates the received signal level (10 segments green for a strong signal, 0 for probe switched off).

7 **PROBE STATUS LED**
Lit when the probe is seated.
Off when triggered.

8 **ERROR LED**
Lit when an error occurs in the transmission of the probe signal, or when the probe is off.

9 **LOW BATTERY LED**
Lit when the battery voltage falls below 7V. Replace the batteries as soon as possible after this LED lights up.

10 **AUDIO VOLUME CONTROL**
Adjusts the volume of the audible transmission monitor. Used to diagnose interference sources.

11 **TRIGGER VOLUME CONTROL**
Adjusts the volume of the audible indicator, heard on probe trigger and to confirm programming operations.

12 **PROGRAMMING WINDOW**
The LED's used for RMP3 programming are mounted behind this window.
To program the RMP3 its programming LED's must be aligned with the MI16 programming window.

MI16 REAR PANEL CONNECTIONS

Connections to the CNC machine control, the power supply and RMM2 antennae are located on the MI16 rear panel.
A 16 pin connector is supplied, the pin functions are described below :

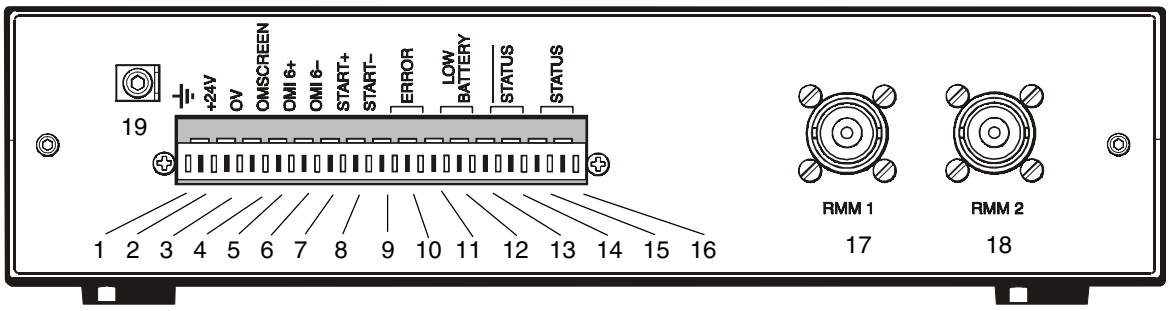

1	**GROUND**
2	**+24 VOLTS DC** (± 10%) Capable of supplying 500mA
3	**0 VOLTS**
4	**OM SCREEN** Connection for OM16 cable screen
5	**+ ve OM16 CONNECTION**
6	**– ve OM16 CONNECTION**
7	**+ ve MACHINE START**
8	**- ve MACHINE START**
9	**ERROR SSR**
10	**ERROR SSR**
11	**LOW BATTERY SSR**
12	**LOW BATTERY SSR**
13	**PROBE $\overline{\text{STATUS}}$ SSR** (NORMALLY CLOSED)
14	**PROBE $\overline{\text{STATUS}}$ SSR** (NORMALLY CLOSED)
15	**PROBE STATUS SSR** (NORMALLY OPEN)
16	**PROBE STATUS SSR** (NORMALLY OPEN)
17	**BNC CONNECTOR** FOR FIRST ANTENNA
18	**BNC CONNECTOR** FOR SECOND ANTENNA
19	**CHASSIS GROUND**

INTERFACE GROUNDING

The MI16 is equipped with an internal power transformer which ensures that the casing is isolated from the external power source.
To maintain the isolation the positive (+) and negative (-) wires must be connected without contacting the chassis. Use of a shielded cable is preferred.

The cable screen must be connected to ground on the machine controller and to the primary ground connection on the MI16 Interface connector (item 1).

The MI16 is equipped with a chassis ground tab (item 19) which should be used to connect the MI16 enclosure to the nearest machine ground.

MI16 AUDIO DIAGNOSTICS

An audio facility, with adjustable volume, is provided on the MI16 Interface to permit the identification of interference sources.

In the event of functional disturbances that suggest radio interference, the audio facility should be used:

Set the audio volume to maximum, using the buttons on the front panel of the MI16.

When the RMP3 is active a continuous tone should be audible, the tone changes when the probe is triggered.

With the RMP3 inactive no tone should be audible; only background noise.

In either condition the sound should be observed and any unusual sounds noted.

The frequency of occurrence may then be correlated to adjacent machinery (arc welders, paging devices) to identify the interference source.

If the source of interference cannot be eliminated, then a change in transmission channel is recommended.

MI16 OUTPUT WAVEFORMS

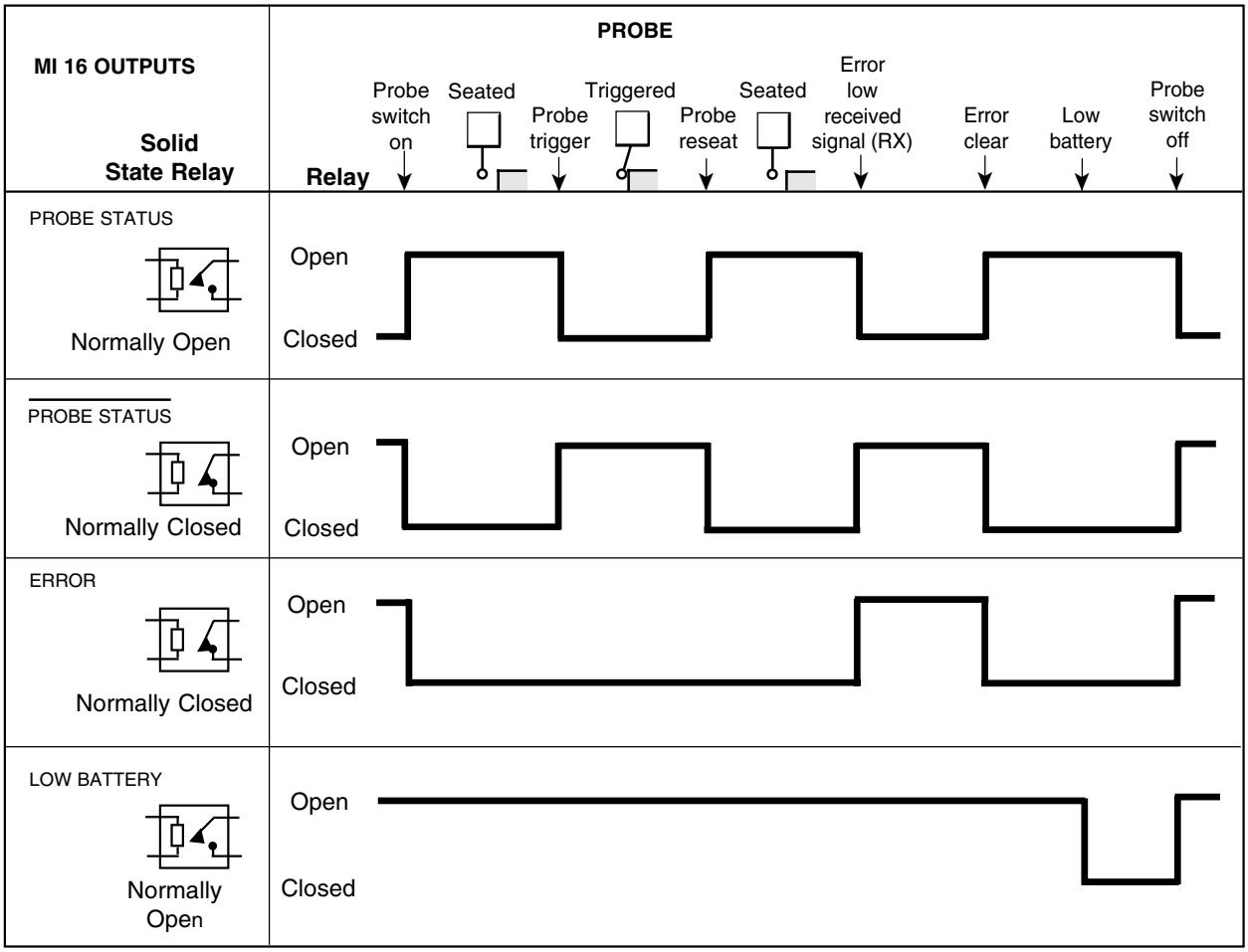

MI16 PANEL MOUNTING KIT

optional

The MI16 interface panel mounting kit (Renishaw Part No. A-2056-0005) allows the interface to be mounted in flat panel when a section of the panel is cut out. All MI 16 front features are neatly displayed.

PSU3 POWER SUPPLY UNIT

optional

dimensions mm (in)

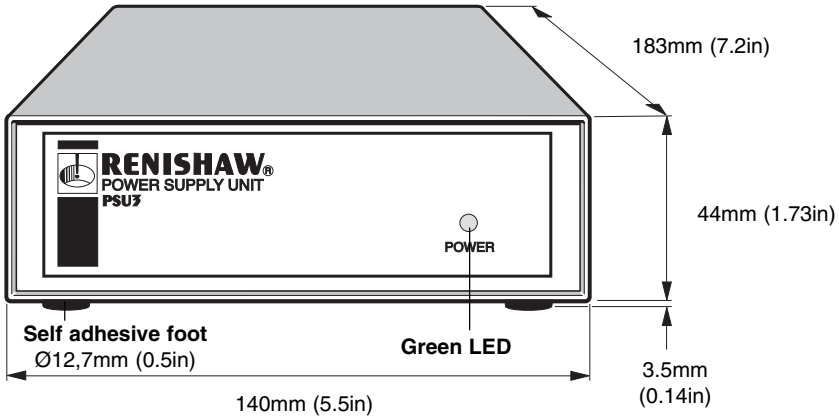

The PSU3 supplies power for the MI16 interface when a 24V ±2V dc power supply is not available from the CNC machine.

The PSU3 is designed for use world-wide.

INPUT

Power to the PSU3 is provided via an IEC mains connector
85 - 264V ac.
47 - 66Hz.
25W maximum.

OUTPUT

24V ±2V dc
0,5 A maximum
The PSU3 is over voltage and over current protected.

OM16 OPTICAL MODULE

optional

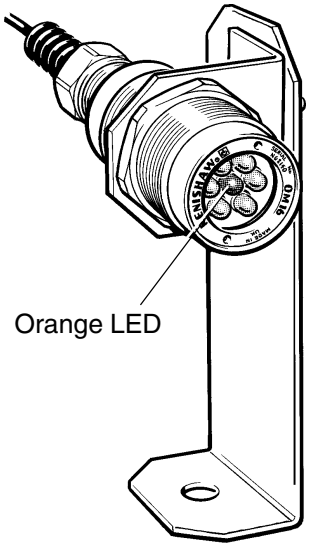

Distance L metres (feet)	OM16 angle A
1 (3.28)	±20°
2 (6.56)	±15°
3 (9.84)	±10°

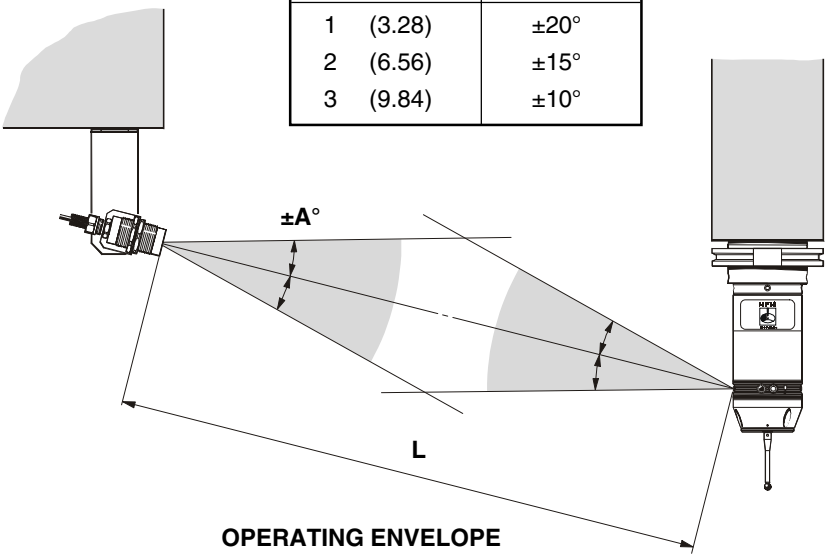

The OM16 window and RMP2 LED's should be wiped clean periodically to remove coolant residues. Operation outside the temperatures specified for operational use (5°C to 50°C / 41°F to 158°F) may result in some reduction in transmission range.
The maximum recommended distance between the OM16 and RMP3 is 3 metres.

OM16 FUNCTION
An M code from the CNC machine control causes the OM16 to send an optical switch on or switch off signal to the probe/RMP3.

The appropriate activation mode is selected and programmed from the MI16 Interface.

The ring of LED's around the probe body receive OM16 optical signals in any probe orientation, provided optical transmitter and receiver LED's are mutually in each other view.

OM16 MOUNTING
The module may be mounted directly to the machine guarding, using the M32 locking nuts provided on the OM16 body.

Alternatively a mounting bracket is supplied with the OM16 module. The bracket securing screws can be loosened to allow the OM16 LED's to be directed towards the probe LED's.

Screws are then re-tightened.

The mounting bracket accepts an M10 size bolt for attachment to guarding or bulkheads.

OM16 WINDOW
The chosen position for the OM16 should be selected to avoid direct impact of machining swarf on the OM16 window. Although the window is 4mm thick toughened glass, long term erosion will eventually reduce optical signal strength.

OM16 LED
An orange LED is lit when a signal is sent.
To assist monitoring system status, the orange LED must be visible to the operator during use.

OM16 OPTICAL MODULE

dimensions mm (in)

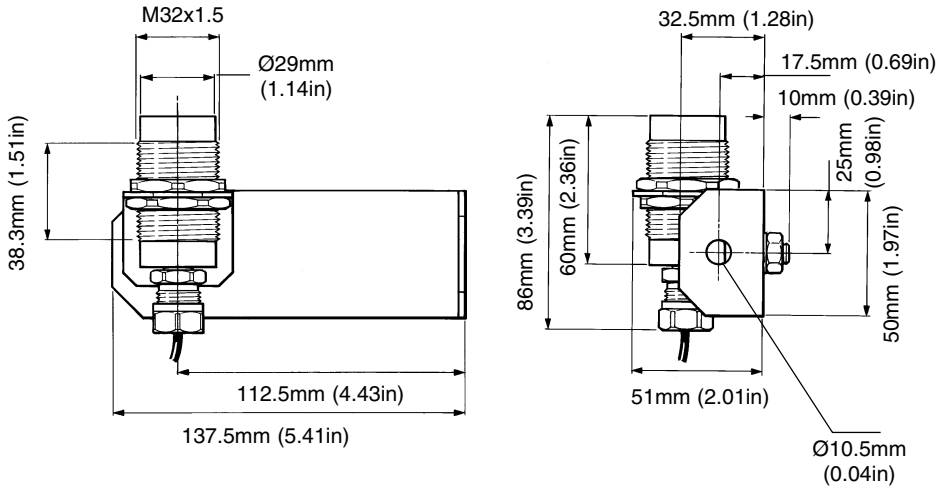

WIRING CONNECTIONS

The OM16 is connected to the MI16 Interface with 25 metres of cable. The cable uses four conductors and the screen. These should be connected as below:

Cable screen
Connect to ground (MI16 pin 4 - see page 19).

Red and Yellow
Connect both to the +ve OM16 pin on the MI16 Interface (MI16 pin 5 - see page 19).

Blue and Green
Connect both to the -ve OM16 pin on the MI16 Interface (MI16 pin 6 - see page 19).

SEALING

The OM16 is sealed to IP68.

A gland suitable for sealing to flexible conduit is supplied as standard.

The OM16 cable should be protected by flexible conduit.
The recommended type is Thomas and Betts SHURESEAL 1/4in, Part No. TBEF 0250-50, or equivalent.

BATTERY

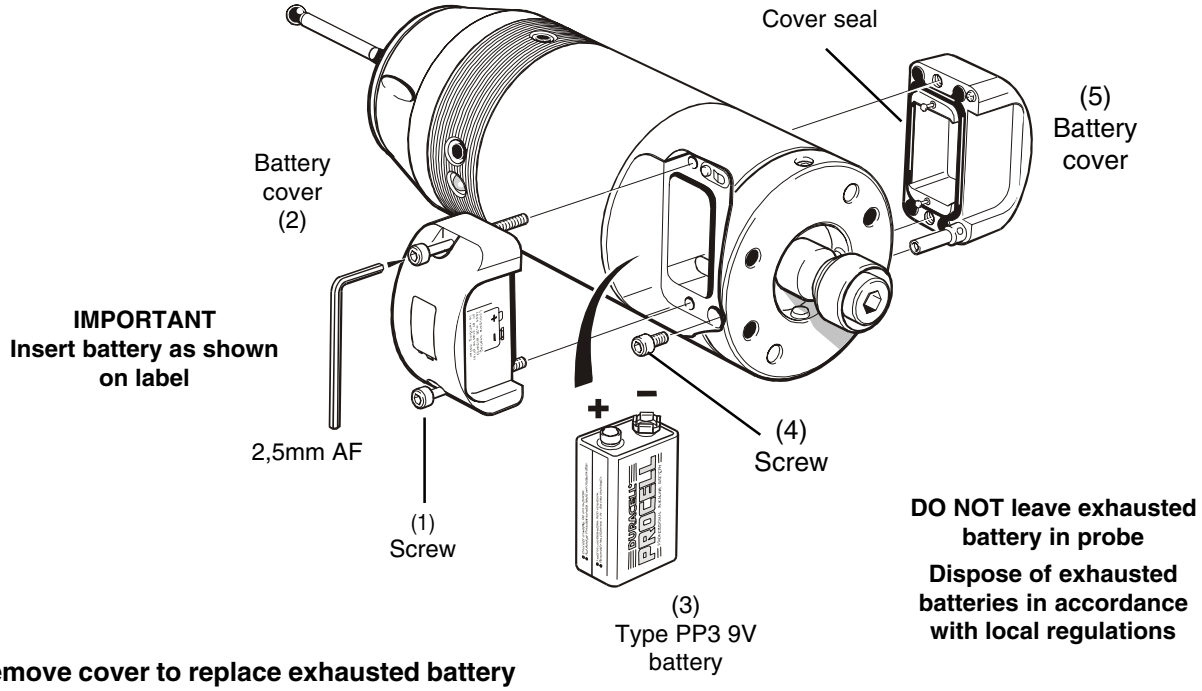

Remove cover to replace exhausted battery

1. Slacken screws (1) and remove battery cover (2).
2. Remove battery (3).
   Do not remove second cover, to change battery.

Probe/shank mounting and stylus on-centre adjustment - remove second cover

3. Remove screw (4) and battery cover (5).

To replace battery covers

4. Check that battery cover seals are seated, and lubricate seals lightly with a mineral oil or grease.
5. Replace cover (5) - with Renishaw logo.
6. Replace battery with polarity as shown on label,
7. Replace battery cover (1) (with battery symbol).
   Tighten battery cover screws to 1,1 Nm (0.8 lbf.ft).

Probe battery

Power for the probe is supplied by one PP3 9V alkaline or lithium battery. **It is essential to select the type listed in chart, or equivalent.**

Low battery warning

When the MI 16 Low Battery LED lights up, battery voltage is low and the end of useable battery life is approaching. (The Low Battery LED will only light up during the probe operating mode).

The machine control may also be programmed to flag up a Low Battery Alarm.

Typical battery reserve life

Using an alkaline battery at 5% usage, the probe will typically continue to operate for 8 hours, after the MI 16 Low Battery LED lights up.

Dead battery indication

When the battery voltage drops below the threshold where performance can be guaranteed, a probe output relay will also be forced into its open state, causing the machine to stop, until a new battery is inserted. The probe will revert to the stand-by mode after changing the battery.

TYPICAL BATTERY LIFE EXPECTANCY

BATTERY TYPE	Stand-by	5% usage (72 min/day)	Continuous
Alkaline PP3 MN1604 (Duracell)	365 days	31 days	38 hours
Lithium PP3 U9VL-FP	730 days	64 days	80 hours

MODES OF OPERATION

The RMP3 transmission module can be switched on and off by a number of different methods:

All options are selectable on the MI16 interface, and programmed into the RMP3 from the MI16 - see page 26.

When a particular option has been selected, all other options are disabled.

A standard RMP3 allows any of the options to be selected except the shank switch method, which requires a dedicated shank.

MP18 PROBE SWITCH ON / SWITCH OFF OPTIONS

Note for M code probe activation, an OM16 is required.

TIME OUT PERIOD

This is selectable to 30 sec (± 1sec) or 180 sec (± 1sec). With prototype RMP3's or if a Mk1 MI16 is used for programming, then the time out will be 180 sec (± 1sec)

DEBOUNCE PERIOD

After the probe is switched on it cannot be switched off again until a period of 2 seconds has elapsed. Similarly, after switch off, the probe cannot be switched on again until 2 seconds has elapsed.

MODE	SWITCH ON METHOD	SWITCH OFF METHOD
M code Optical on Optical off	A machine M code causes the OM16 to send an optical signal to the RMP3, which switches it on.	A machine M code causes the OM16 to send an optical signal to the RMP3, which switches it off.
M code Optical on Time out off	The machine M code causes the OM16 to send an optical signal to the RMP3, which switches it on.	The RMP3 will switch off once the timeout period elapses since the last probe trigger, or since the RMP3 was last switched on (whichever was later).
Spin on Spin off (centrifugal switch)	The machine spindle is rotated at 500 rev/min (± 50 rev/min), for a minimum of 1 sec to ensure reliable switch on.	The machine spindle is rotated at 500 rev/min (± 50 rev/min), for a minimum of 1 sec to ensure reliable switch off.
Spin on Time out off	The machine spindle is rotated at 500 rev/min (± 50 rev/min), for a minimum of 1 sec to ensure reliable switch on.	The RMP3 will switch off once the timeout period elapses since the last probe trigger, or since the RMP3 was last switched on (whichever was later).

MP18-S PROBE WITH SHANK SWITCH

The MP18-S, is supplied with a modified shank incorporating a shank switch.

Switch on occurs when the shank is inserted into the machine spindle causing the switch to depress and switch the probe on.

The probe switches off when the probe is removed from the machine spindle.

The shank switch option is selected from the MI16 machine interface - see page 26.

TAKE CARE

Ensure that the shank switch is not depressed when the probe is stored in the machine tool carousel.

MODE AND CHANNEL SELECTION

The MI16 Interface and probe/RMP3 transmission module are factory set to Channel 1. The following procedure must be followed to set or change the transmission channel.

The programming of the transmission channel and the RMP3 activation mode is carried out on the MI16 and transferred to the RMP3 by a short range optical link.

To program the RMP3 it is necessary to bring the RMP3 close to the front panel of the MI16 Interface. This should be catered for when selecting the MI16 Interface mounting and positioning.

PROGRAMMING THE MI16 INTERFACE

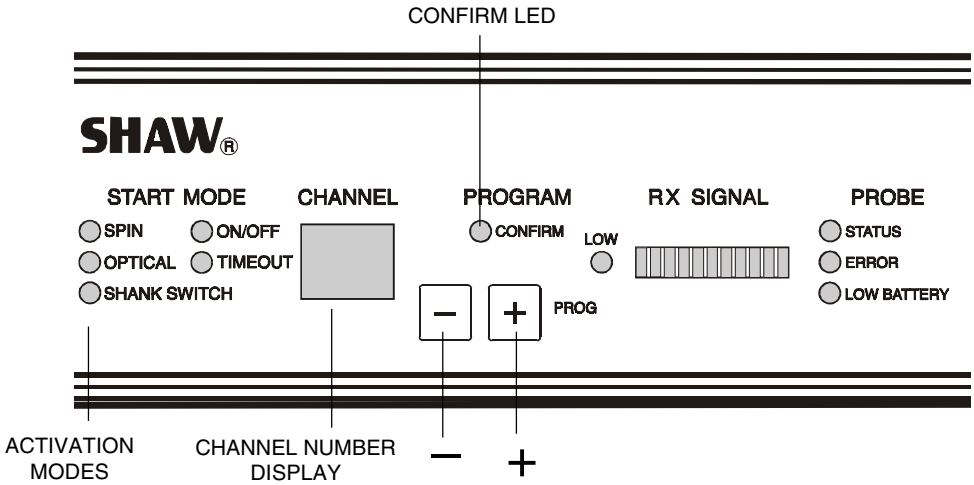

1. The programming mode is entered by pressing simultaneously the programming '+' and '–' buttons on the front of the MI16 Interface, for approximately 5 seconds. The Channel Number and Activation Mode displays will start to flash, to indicate that the Interface is ready to be programmed.
2. Select the required channel by using the '+' button to increase the channel number, and the '-' button to reduce the channel number. 69 channels are available.
3. To change the activation method, simultaneously press both the '+' and '-' buttons. Each simultaneous press will cause the activation method to change. The MI16 can be cycled through all the available activation methods.
4. When a Mk2 MI16 is used, the mode selection will select 30 sec (± 1sec) time out when the time out LED is green, or 180 sec (± 1sec) when the time out LED is red.
5. If neither key is pressed for 5 seconds the channel number stops flashing, followed by a double audible beep, and the 'CONFIRM' LED lighting on the MI16 Interface front panel for a period of 10 seconds. This indicates that programming of the interface is complete.

   If only a change in channel is required, with no change in activation method, action 5. may be taken after action 2.

RADIO FREQUENCY and CHANNEL SEPARATION

The frequency range is divided into separate channels, each channel having a typical bandwidth of 25kHz, to permit many systems to operate in close proximity without the danger of interference.
The operating channel is programmed by push buttons on the MI16.

Channel No	Frequency MHz
1	433.075
2	433.100
3	433.125
4	433.150
5	433.175
6	433.200
7	433.225
8	433.250
9	433.275
10	433.300
11	433.325
12	433.350
13	433.375
14	433.400
15	433.425
16	433.450
17	433.475
18	433.500
19	433.525
20	433.550
21	433.575
22	433.600
23	433.625

Channel No	Frequency MHz
24	433.650
25	433.675
26	433.700
27	433.725
28	433.750
29	433.775
30	433.800
31	433.825
32	433.850
33	433.875
34	433.900
35	433.925
36	433.950
37	433.975
38	434.000
39	434.025
40	434.050
41	434.075
42	434.100
43	434.125
44	434.150
45	434.175
46	434.200

Channel No	Frequency MHz
47	434.225
48	434.250
49	434.275
50	434.300
51	434.325
52	434.350
53	434.375
54	434.400
55	434.425
56	434.450
57	434.475
58	434.500
59	434.525
60	434.550
61	434.575
62	434.600
63	434.625
64	434.650
65	434.675
66	434.700
67	434.725
68	434.750
69	434.775

PROGRAMMING THE RMP3 TRANSMISSION MODULE

1. To enter the RMP3 programming mode, remove the probe battery cover and battery for a period of 10 seconds minimum.

2. Replace the battery cover and battery. A double green flash from the RMP3 STATUS LED indicates the RMP3 is in programming mode. The mode is active for one minute, after which the RMP3 returns to standby status.

3. To program the RMP3 (or check its current programming configuration) align the RMP3 programming LED with those

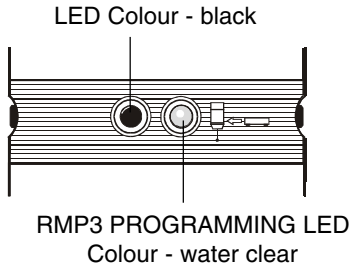

on the MI16 front panel. The MI16 programming LED's are shown below.

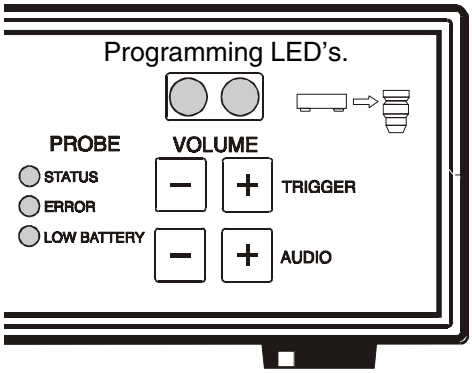

MI16 INTERFACE

4. The MI16 and the RMP3 programming LED's must be aligned and held within 100mm (3.93in) of each other for the optical link to be established.

5. Once the optical link has been established the interface emits an audible beep every ½ second for 5 seconds and the front panel displays the current RMP3 configuration.

6. If the RMP3 is now moved away from the MI16 Interface no programming will take place. (Useful if the user wishes to verify the current configuration of the RMP3).

7. If the RMP3 is held in position (see action 4) a continuous audible beep will be emitted for 5 seconds, to warn that programming is about to occur.
   If the RMP3 is moved out of range during this period no programming occurs.

8. At the end of the above period programming occurs.

9. Successful programming is indicated by a double audible beep and the 'CONFIRM' LED lighting on the MI16 Interface front panel for 5 seconds.
   The RMP3 remains active until the one minute allowed for programming has elapsed. At this point the system switches to standby mode and is ready for use.

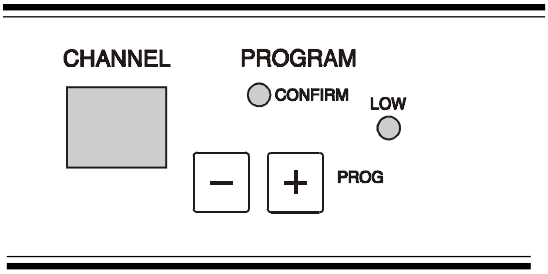

MI16 INTERFACE

10. Incorrect programming is indicated by continuous audible beeps, flashing of the channel number display and the 'CONFIRM' LED not lighting.
    In this event the programming procedure should be repeated.

MAINTENANCE

STYLUS SPRING PRESSURE ADJUSTMENT

Gauging force

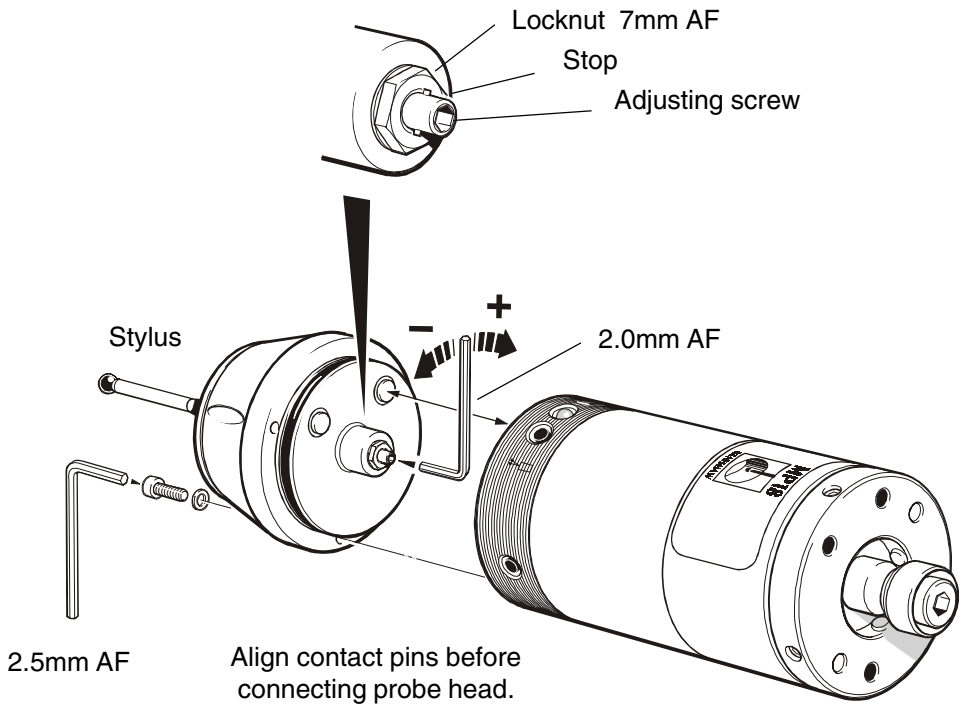

DO NOT rotate probe head when located in radio module

Spring pressure within the probe causes the stylus to sit in one unique position, and return to this position following each stylus deflection.
Stylus pressure is set by Renishaw.
The user should only adjust spring pressure in special circumstances e.g. excessive machine vibration or insufficient pressure to support the stylus weight.

To adjust spring pressure, remove the probe head to gain access to the spring pressure adjusting screw. Slacken the locknut, and turn the adjusting screw anticlockwise to reduce pressure (more sensitive) or clockwise to increase pressure (less sensitive).

A stop prevents damage, which could be caused by overtightening the adjusting screw.

Finally tighten the locknut to 1Nm (0.74lbf.ft) and replace the probe head.

ENSURE THAT THE OMP IS KEPT CLEAN. DO NOT ALLOW COOLANT OR PARTICLES TO ENTER THE PROBE.

STYLUS SPRING PRESSURE ADJUSTMENT AND USE OF STYLI OTHER THAN CALIBRATION STYLUS TYPE, MAY CAUSE REPEATABILITY TO DIFFER FROM THE TEST CERTIFICATE RESULTS.

DIAPHRAGM INSPECTION and REPLACEMENT

PROBE DIAPHRAGMS

The probe mechanism is protected from coolant and debris by two diaphragms, these provide adequate protection under normal working conditions.
The user should periodically check the outer diaphragm, for signs of damage and coolant leakage. If this is evident replace the outer diaphragm.

The outer diaphragm is resistant to coolant and oils. However if the outer diaphragm is damaged, the inner diaphragm could become weakened with prolonged immersion in certain coolants and oils.

The user must not remove the inner diaphragm. If damaged, return the probe to your supplier for repair.

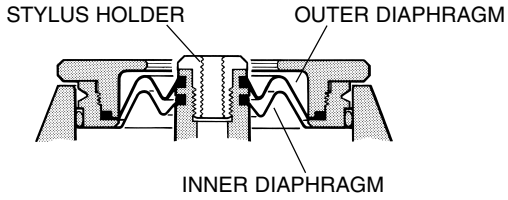

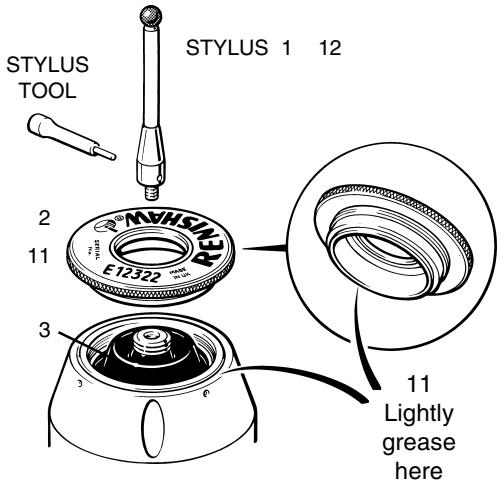

OUTER DIAPHRAGM INSPECTION

1. Remove the stylus
2. Unscrew the front cover.
3. Inspect outer diaphragm for damage.
4. To remove outer diaphragm, grip near the middle and pull upwards.

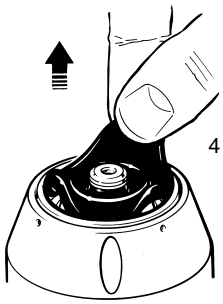

INNER DIAPHRAGM INSPECTION

5. Inspect inner diaphragm for damage.

If damaged return the probe to your supplier for repair.

DO NOT REMOVE INNER DIAPHRAGM

OUTER DIAPHRAGM REPLACEMENT

6. Screw tool fully into stylus holder.
7. Fit new diaphragm.
8. The diaphragm must locate centrally in the stylus holder groove.
9. Press diaphragm to expel trapped air.
10. Remove tool.
11. Lightly smear medium grease on front cover lower surface. Then refit cover and tighten.
12. Refit stylus

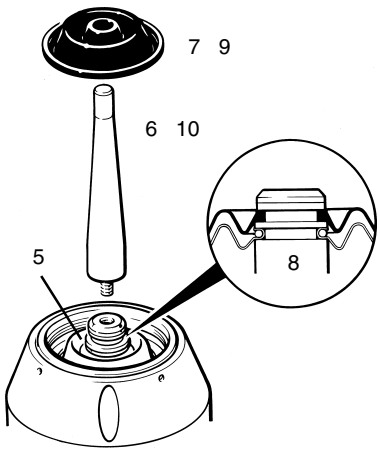

WARNING:
NEVER ATTEMPT TO REMOVE
DIAPHRAGM WITH METAL OBJECTS

SCREW TORQUE VALUES

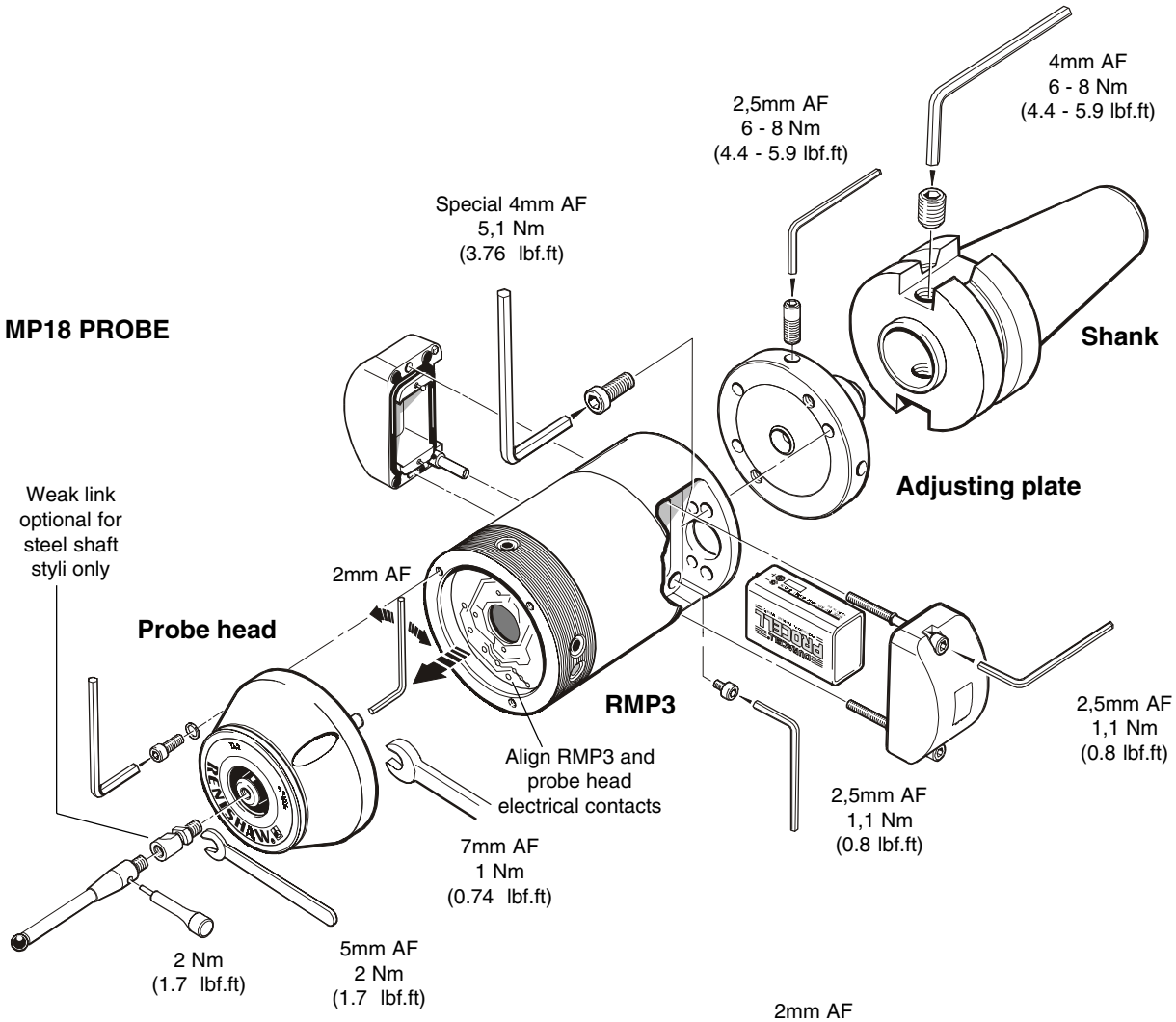

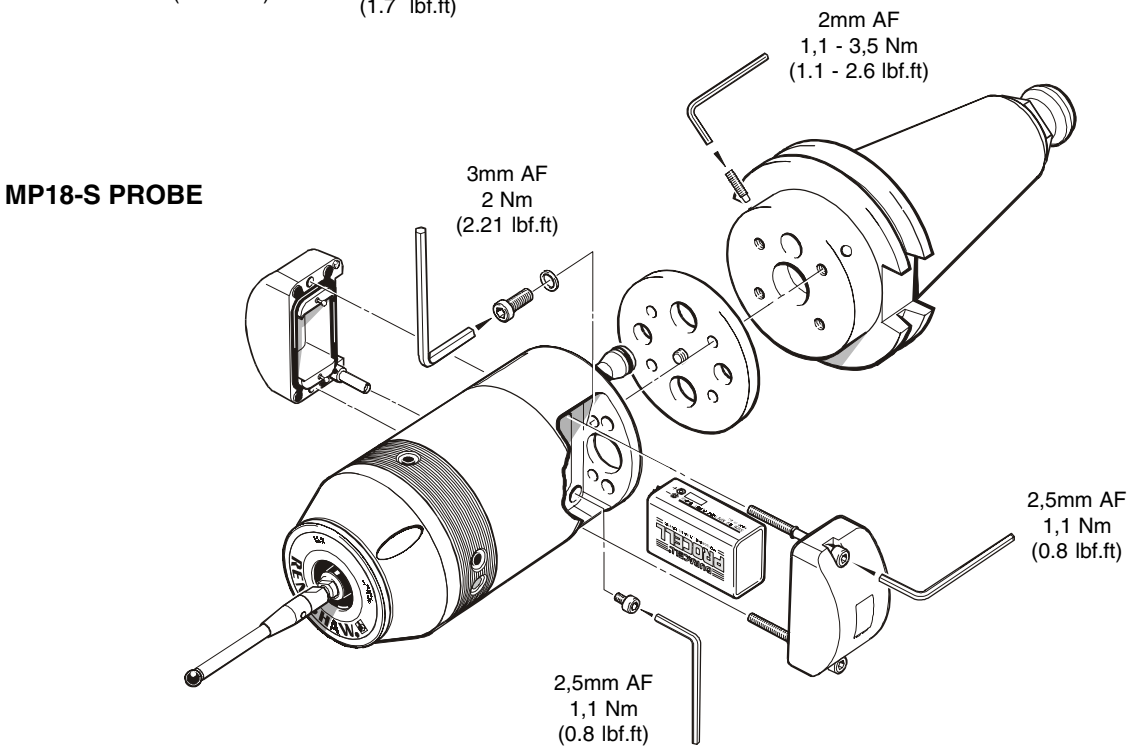

PARTS LIST - Please quote the Part No. when ordering equipment

Type	Part No.	Description
SYSTEM KITS		
MP18 KIT	✻	MP18 probe, MI16, RMM2 x two, shank adaptor, tool kit.
MP18 PROBE	✻	MP18 probe with battery, adaptor plate and tool kit.
MP18-S PROBE	✻	MP18-S probe with battery, adaptor plate and tool kit.
MP18-S KIT (ANSI -1985-CAT-SIZE 40)	✻	MP18-S probe, MI16, RMM2 x two, shank adaptor, shank, tool kit.
MP18-S KIT (ANSI -1985-CAT-SIZE 45)	✻	MP18-S probe, MI16, RMM2 x two, shank adaptor, shank, tool kit.
MP18-S KIT (ANSI -1985-CAT-SIZE 50)	✻	MP18-S probe, MI16, RMM2 x two, shank adaptor, shank, tool kit.
MP18-S KIT (ANSI -1978-SIZE 40)	✻	MP18-S probe, MI16, RMM2 x two, shank adaptor, shank, tool kit.
MP18-S KIT (ANSI -1978-SIZE 45)	✻	MP18-S probe, MI16, RMM2 x two, shank adaptor,shank, tool kit.
MP18-S KIT (ANSI -1978-SIZE 50)	✻	MP18-S probe, MI16, RMM2 x two, shank adaptor, shank, tool kit.
MP18-S KIT (DIN 69871-SIZE 40)	✻	MP18-S probe, MI16, RMM2 x two, shank adaptor, shank, tool kit.
MP18-S KIT (DIN 69871-SIZE 45)	✻	MP18-S probe, MI16, RMM2 x two, shank adaptor, shank, tool kit.
MP18-S KIT (DIN 69871-SIZE 50)	✻	MP18-S probe, MI16, RMM2 x two, shank adaptor, shank, tool kit.
MP18-S KIT (BT-1982-SIZE 40)	✻	MP18-S probe, MI16, 2 off RMM2's, shank adaptor, shank, tool kit.
MP18-S KIT (BT-1982-SIZE 50)	✻	MP18-S probe, MI16, RMM2 x two, shank adaptor, shank, tool kit.

✻ **Please contact Renishaw**

All MP18-S versions are custom products, requiring a separate quotation and price.

USER REGION USA

PARTS LIST - Please quote the Part No. when ordering equipment

Type	Part No.	Description
SYSTEM COMPONENTS		
RMP3 433 FCC	A-2249-0230	RMP3 transmission module with tool kit.
RMP3 S 433 FCC	A-2249-0231	RMP3 transmission module and tool kit. shank switch version (**without shank and adaptor plate**)
Shank adaptor	A-2107-0031	Shank adaptor plate for attachment to MP18 style shanks.
Shank adaptor	A-2249-0134	Shank adaptor plate kit for shank switch for attachment to MP18-S style shanks.
RMM2 side exit	A-2137-0170	RMM2 antenna - side exit cable.
RMM2 rear exit	A-2137-0470	RMM2 antenna - rear exit cable.
MI16	A-2137-0160	MI16 interface with connector.
OM16 kit	A-2137-0401	OM16 optical module and mounting bracket.
Battery	P-BT03-0001	Duracell MN1604, PP3, 9V.
Stylus	A-5000-3709	PS3-1C stylus, Ø6 ball x 50mm long with ceramic stem.
Weak link kit	A-2085-0068	Kit comprising : stylus weak link stem x two, spanner and instruction sheet.
Weak link stem	M-2085-0069	Stylus weak link stem for use with steel shaft styli.
Spanner	P-TL09-0003	Spanner for weak link stem.
Styli	—	See Data Sheet H-1000-3200.
PSU3 power supply	—	See Data Sheet H-2000-2200
Software	—	See Data Sheet H-2000-2289.

ADDENDUM 1

Radio system component compatibility

Complete MP14 and MP16 probe systems may be exchanged with complete MP18 and MP18-S probe systems.

Component compatibility
NOT ALL MP18 components are compatible with components used with the earlier MP14 radio transmission system.

Components with identical model name/number are interchangeable between systems.

Earlier MP14 systems incorporating an RMP, RMM and the MI14 interface **DO NOT** function with current systems using the RMP2 (used with MP16), RMP3 (used with MP18), RMM2, MI16 interface and the OM16 optical module.

Probe/RMP2/RMP3
The RMP2 and RMP3 will communicate with the RMM and RMM2, provided they are set to operate on the same channel.

The MP18 probe is smaller and lighter than the MP14 and MP16 probes.

RMM and RMM2 antenna
Both antenna use the same base. The RMM2 antenna is shorter than the RMM antenna.

Interface unit
The MI14 interface has been replaced by the MI16 interface, both units are the same size. All electrical outputs and inputs to the MI16 Interface remain unchanged from the MI14 Interface.

(Note that a 16 pin plug is required for connection to the MI16 Interface rather than the 14 pin connector used on the MI14 Interface. The two extra contacts allow connection to the OM16 Optical Module).

ADDENDUM 2

Shank manufacturing details for MP18

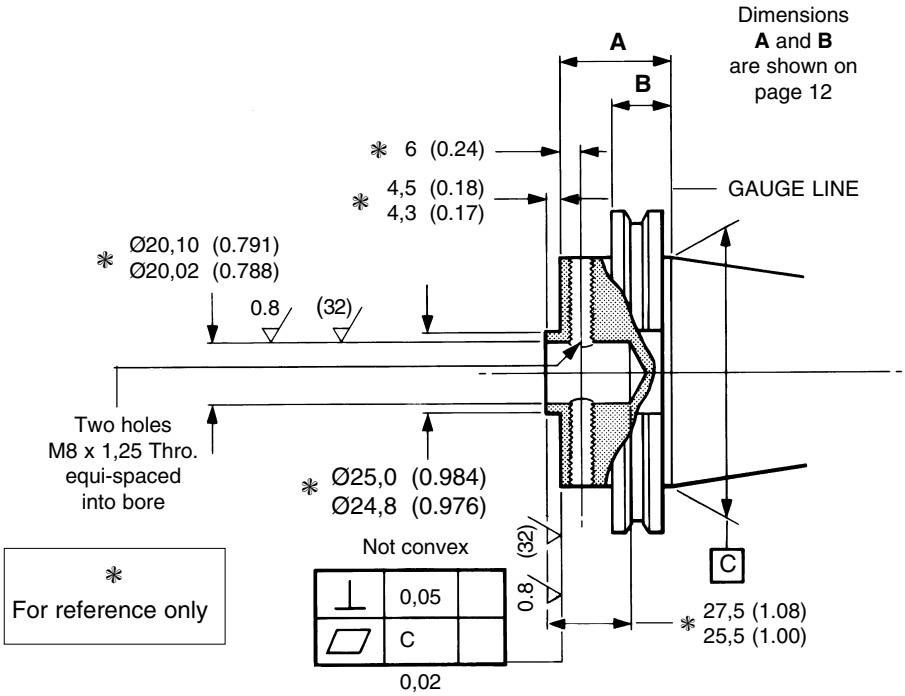

Shank manufacturing details to prepare shank for MP18 shank adaptor

(shank without shank switch)

ADDENDUM 3

SELECTION OF MI16 SENSITIVITY

The MI16 MK3 version has an integral switch which allows the selection of the radio reception sensitivity level.
The switch is located on the rear panel.

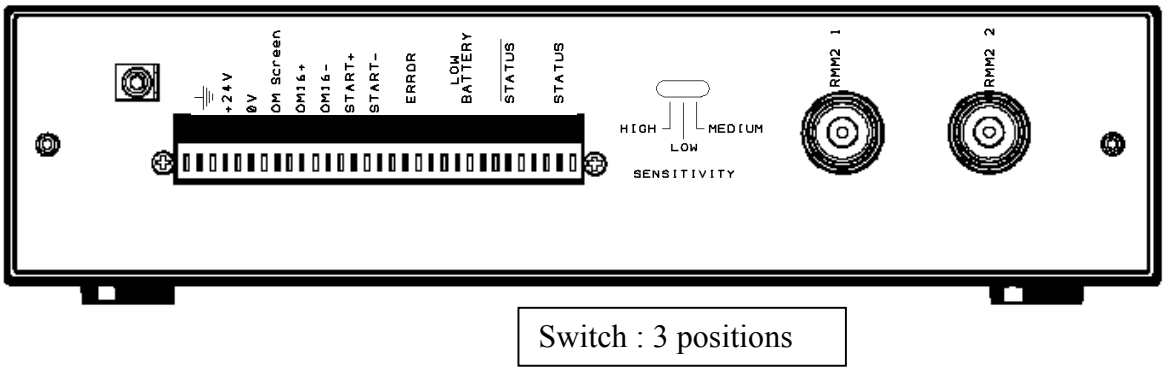

Switch : 3 positions

The sensitivity can be selected from three levels:

HIGH : The reception sensitivity is strong.
- ð The reception distance is longer.
- ð The parasitic sensitivity is increased.

LOW : The reception sensitivity is lower.
- ð The reception distance is smaller.
- ð The parasitic sensitivity is diminished.

MEDIUM : This position is a compromise between the two previous.

ADVICE ON SELECTION OF SWITCH POSITION

The choice of the switch position is dependent on the probe power version sold in the different markets.
The following positions are recommended:

HIGH = USA Market

LOW = CEE Market

MEDIUM = JAPAN Market

Note : The choice of the MI16 interface sensitivity does not replace the procedures for the antenna installation (see RMM2 ANTENNA-Operating envelope and installation).

RENISHAW

www.renishaw.com

Renishaw plc, New Mills, Wotton-under-Edge, Gloucestershire, GL12 8JR, **United Kingdom.**
International Tel +44 1453 524 524 **National Tel** 01453 524 524 [07000 RENISHAW]
International Fax +44 1453 524 901 **National Fax** 01453 524 901
Telex 437120 RENMET G **email** genenq@renishaw.com

GROUP COMPANIES

Renishaw Latino Americana Ltda.,
Calçada dos Crisântemos 22,
C.C. Alphaville,
C.e.p. 06453-000, Barueri SP,
Brazil.
Tel +55 11 7295 2866
Fax +55 11 7295 1641
email brazil@renishaw.com

Renishaw (Hong Kong) Ltd.,
Unit 4A, 3/F, New Bright Building,
11 Sheung Yuet Road,
Kowloon Bay,
Hong Kong.
The People's Republic of China.
Tel +852 2753 0638
Fax +852 2756 8786
email hongkong@renishaw.com

Renishaw S.A.,
15 rue Albert Einstein,
Champs sur Marne,
77437 Marne la Vallée,
Cedex 2,
France.
Tel +33 1 64 61 84 84
Fax +33 1 64 61 65 26
email france@renishaw.com

Renishaw GmbH,
Karl-Benz Strasse 12,
72124 Pliezhausen,
Germany.
Tel +49 7127 9810
Fax +49 7127 88237
email
germany@renishaw.com

Renishaw S.p.A.,
Via dei Prati 5,
10044 Pianezza,
Torino,
Italy.
Tel +39 011 9 66 10 52
Fax +39 011 9 66 40 83
email italy@renishaw.com

Renishaw KK,
Across City Nakano-Sakaue,
38-1, Chuo 1-chome,
Nakano-ku,
Tokyo 164-0011,
Japan.
Tel +81 3 5332 6021
Fax +81 3 5332 6025
email japan@renishaw.com

Renishaw Iberica S.A.,
Edificio Océano,
Calle Garrotxa 10-12,
Parque Más Blau,
08820 Prat de LLobregat,
Barcelona,
Spain.
Tel +34 93 478 21 31
Fax +34 93 478 16 08
email spain@renishaw.com

Renishaw A.G.,
Poststrasse 5,
CH 8808 Pfäffikon,
Switzerland.
Tel +41 55 410 66 66
Fax +41 55 410 66 69
email switzerland@renishaw.com

Renishaw Inc.,
5277 Trillium Blvd,
Hoffman Estates, Illinois 60192,
U.S.A.
Tel +1 847 843 3666
Fax +1 847 843 1744
email usa@renishaw.com

REPRESENTATIVE OFFICES

Australia Melbourne
Tel +61 3 9553 8267
Fax +61 3 9592 6738
email australia@renishaw.com

The People's Republic of China
Beijing
Tel +86 10 6410 7993
Fax +86 10 6410 7992
email china@renishaw.com

Indonesia Jakarta
Tel +62 21 428 70153
Fax +62 21 424 3934
email indonesia@renishaw.com

Singapore
Tel +65 897 5466
Fax +65 897 5467
email singapore@renishaw.com

REPRESENTATIVE OFFICES

Taiwan Taichung city
Tel +886 4 251 3665
Fax +886 4 251 3621
email taiwan@renishaw.com

India Bangalore
Tel +91 80 509 5419
Fax +91 80 509 5421
email india@renishaw.com

LIAISON OFFICE

South Korea Seoul
Tel +82 2 565 6878
Fax +82 2 565 6879
email southkorea@renishaw.com

Renishaw reserves the right to change specifications without notice.

© Renishaw 2000 Issue date 09.00