**Quick-start guide**

H-6587-8500-01-A

RENISHAW

apply innovation™

# RMP60

| | | | |
|---|---|---|---|
| **EN** | | Publications for this product are available by scanning the barcode or visiting **www.renishaw.com/rmp60**. | |
| **DE** | | Für dieses Produkt stehen weitere Informationen zur Verfügung. Scannen Sie dazu den Barcode oder besuchen Sie **www.renishaw.de/rmp60**. | |
| **ES** | | Para acceder a las publicaciones sobre este producto escanee el código de barras o visite **www.renishaw.es/rmp60**. | |
| **FR** | | Les documentations pour ce produit sont disponibles en scannant le code barres ou en visitant **www.renishaw.fr/rmp60**. | |
| **IT** | | Le pubblicazioni relative a questo prodotto sono disponibili scansionando il codice a lato oppure visitando il sito: **www.renishaw.it/rmp60**. | |
| **日本語** | | 本製品に関する資料については、バーコードをスキャンするか **www.renishaw.jp/rmp60** をご覧ください。 | |

Issued: xx.xxxx

| | | | |
|---|---|---|---|
| **PL** | | Dostęp do dokumentacji tego produktu można uzyskać, skanując kod kreskowy lub odwiedzając witrynę **www.renishaw.pl/rmp60**. | |
| **CS** | | Publikace pro tento produkt jsou k dispozici po naskenování QR kódu nebo na stránce **www.renishaw.cz/rmp60**. | |
| **RU** | | Если вас интересует информация об этом продукте, отсканируйте штрих-код или посетите сайт **www.renishaw.ru/rmp60**. | |
| 中文 (繁體) | | 可透過下列方式獲得此產品的出版物<br>透過掃描條碼，或造訪:<br>**www.renishaw.com.tw/rmp60**。 | |
| **中文 (简体)** | | 可通过以下方式获得此产品的相关文档:<br>扫描二维码，或访问<br>**www.renishaw.com.cn/rmp60**。 | |
| 한국어 | | 본 제품에 대한 간행물은<br>바코드를 스캔하거나 다음을 방문하여 확인하실 수있습니다<br>**www.renishaw.co.kr/rmp60**. | |

This page is intentionally left blank.

## Safety

### Information to the user

The RMP60 is supplied with two non-rechargeable AA alkaline batteries. Lithium-thionyl chloride non-rechargeable AA batteries may also be used in the RMP60, Refer to the *RMP60 radio machine probe* installation guide (Renishaw part no. H-6587-8501). Lithium batteries must be approved to BS EN 62133:2013 (IEC 62133:2012). Once the charge in the batteries is depleted, do not attempt to recharge them.

The use of this symbol on the batteries, packaging or accompanying documents indicates that used batteries should not be mixed with general household waste. Please dispose of the used batteries at a designated collection point. This will prevent potential negative effects on the environment and human health which could otherwise arise from inappropriate waste handling. Please contact your local authority or waste disposal service concerning the separate collection and disposal of batteries. All lithium and rechargeable batteries must be fully discharged or protected from short circuiting prior to disposal.

Ensure replacement batteries are of the correct type and are fitted in accordance with the instructions in the installation guide; refer to the *RMP60 radio machine probe* installation guide (Renishaw part no. H-6587-8501) for further information. For specific battery operating, safety and disposal guidelines, refer to the battery manufacturer's literature.

- Ensure that all batteries are always inserted with the correct polarity.
- Do not store batteries in direct sunlight or rain.
- Do not expose to heat or dispose of the batteries in a fire.
- Avoid forced discharge of the battery.
- Do not short-circuit or force discharge the batteries.
- Do not disassemble, pierce, deform or apply excessive pressure to the batteries.
- Do not swallow the batteries.
- Keep the batteries out of the reach of children.
- Do not allow batteries to get wet.
- Do not mix new and used batteries or battery types, as this will result in reduced life and damage to the batteries.
- If a battery is damaged, exercise caution when handling to avoid contact with electrolyte.

Ensure that you comply with international and national battery transport regulations when transporting batteries or the products.

**NOTE:** Lithium batteries are classified as dangerous goods and strict controls apply to their shipment by air. To reduce the risk of shipment delays, if you need to return the RMP60 to Renishaw for any reason, do not return any batteries.

In all applications involving the use of machine tools, eye protection is recommended.

The RMP60 has a glass window. Handle with care if broken to avoid injury.

**Information to the machine supplier/installer**

It is the machine supplier's responsibility to ensure that the user is made aware of any hazards involved during operation, including those mentioned in Renishaw product literature, and to ensure that adequate guards and safety interlocks are provided.

Under certain circumstances, the probe signal may falsely indicate a probe seated condition. Do not rely on probe signals to halt the movement of the machine.

**Information to the equipment installer**

All Renishaw equipment is designed to comply with the relevant EU and FCC regulatory requirements. It is the responsibility of the equipment installer to ensure that the following guidelines are adhered to, in order for the product to function in accordance with these regulations:

- any interface MUST be installed in a position away from any potential sources of electrical noise, i.e. power transformers, servo drives etc;
- all 0 V/ground connections should be connected to the machine "star point" (the "star point" is a single point return for all equipment ground and screen cables). This is very important and failure to adhere to this can cause a potential difference between grounds;
- all screens must be connected as outlined in the user instructions;
- cables must not be routed alongside high current sources, i.e. motor power supply cables etc, or be near high-speed data lines;
- cable lengths should always be kept to a minimum.

**Equipment operation**

If this equipment is used in a manner not specified by the manufacturer, the protection provided by the equipment may be impaired.

| **Batteries** | AA alkaline × 2 | AA lithium-thionyl chloride × 2 | | |
|---|---|---|---|---|
| | ✓ | ✓ | Saft | LS 14500 |
| | | | Tadiran | SL-760/S |
| | | | | TL-5903/S, TL-2100/S |
| | | | Xeno | XL-060F |

**NOTE:** Maximum battery life is achieved when lithium-thionyl chloride batteries are used.

## Fitting the stylus

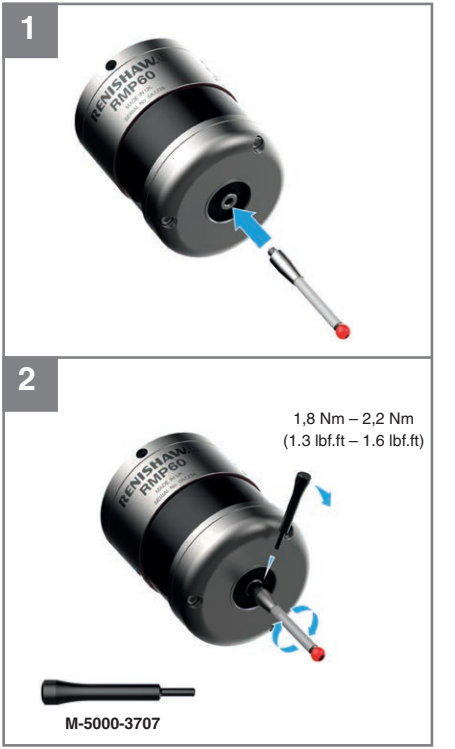

## Installing the batteries

✶ Take care not to short the battery contacts as this may be a fire hazard. Ensure the contact strips are located securely.

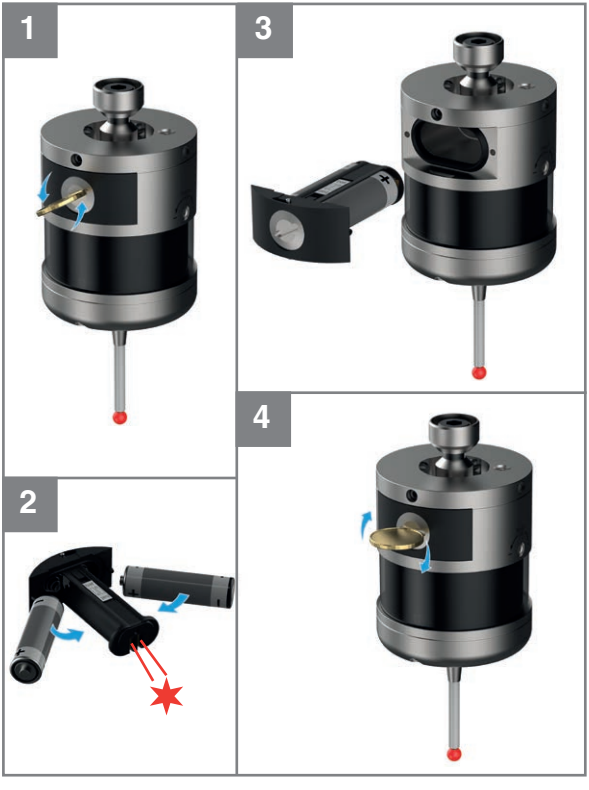

| | |
|---|---|
| **EN** | **Configuring the probe**<br><br>Probe settings can be reviewed and configured by using the Opti Logic technique or Trigger Logic™ technique.<br>The Probe Setup app enables the application of Opti Logic and provides interactive instructions and informative videos to apply Trigger Logic to review and configure settings and to partner the probe.<br><br>Download on the App Store<br>GET IT ON Google Play |

## Configuring the probe with Opti Logic

Opti Logic is accessed via the Probe Setup app.

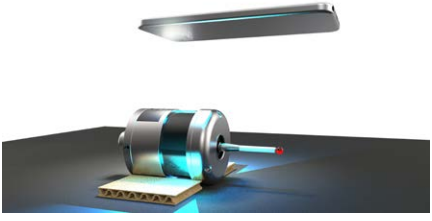

For full details about Opti Logic, refer to the Probe Setup app which is available for download on the App Store or Google Play.

Download on the App Store

GET IT ON Google Play

## Reviewing the probe settings

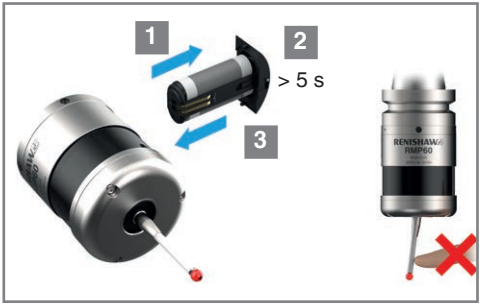


| Key to the symbols | |
|---|---|
| ● | LED short flash |
| ▬ | LED long flash |

**LED check**

● ● ●

↓

**Switch-on method**

| Radio on (omitted if **"Multiple probe mode"** was selected) | or | Shank on | or | Spin on |
|---|---|---|---|---|
| ● ● ▬ | | ● ● ▬ | | ● ● ▬ |

↓

**Switch-off method**

| Radio off or Spin off or Shank off | or | Short timeout 12 s | or | Medium timeout 33 s | or | Long timeout 134 s |
|---|---|---|---|---|---|---|
| ● ● ▬ | | ● ● ▬ | | ● ● ▬ | | ● ● ▬ |

↓

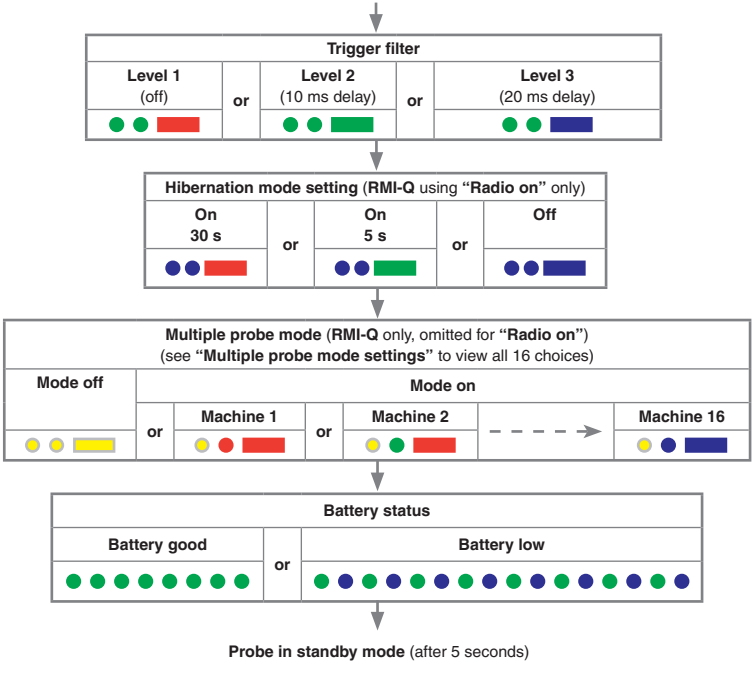
Trigger filter
Level 1
(off)
or
Level 2
(10 ms delay)
or
Level 3
(20 ms delay)
Hibernation mode setting (RMI-Q using "Radio on" only)
On
30 s
or
On
5 s
or
Off
Multiple probe mode (RMI-Q only, omitted for "Radio on")
(see "Multiple probe mode settings" to view all 16 choices)
Mode off
Mode on
or
Machine 1
or
Machine 2
Machine 16
Battery status
Battery good
or
Battery low
Probe in standby mode (after 5 seconds)

## **Multiple probe mode settings** (RMI-Q application only)

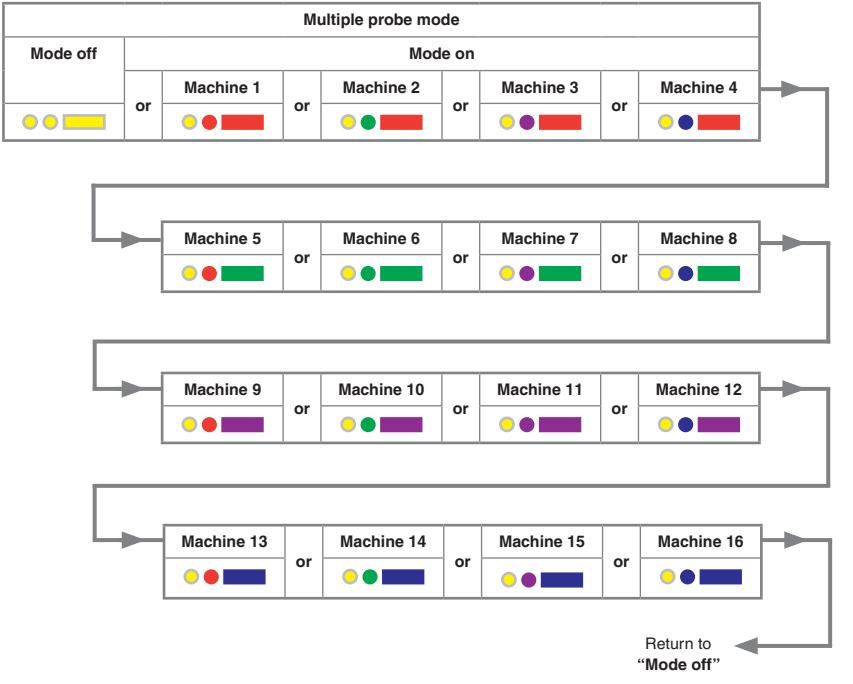

This page is intentionally left blank.

## Probe partnering function

Using Trigger Logic™ the probe partnering function enables the probe to be partnered with RMI-Q or RMI-QE.

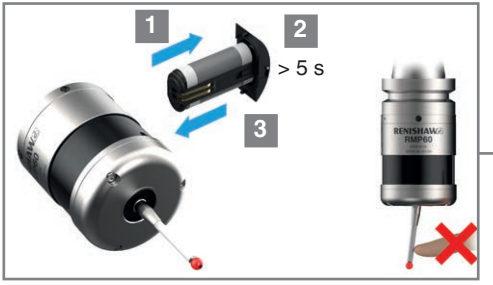


**LED check**

| Key to the symbols | |
|---|---|
| ● | LED short flash |
| ▬ | LED long flash |
| ⇨ | Deflect the stylus for less than 4 seconds to move to the next menu option. |
| ⬇ | To exit, leave the stylus untouched for more than 120 seconds. |
| ⬇ | Partnering successful. Probe is now in standby. |

All probe settings will be shown, ending with "**Battery status**" being displayed.

| Battery status | | |
|---|---|---|
| **Battery good** | **or** | **Battery low** |
| ● ● ● ● ● ● ● ● | | ● ● ● ● ● ● ● ● ● ● ● ● ● ● ● |

Whilst the **"Battery status"** is being displayed, deflect and release the stylus to enter **"Partnering mode off"**. Probe status will flash red to acknowledge this.

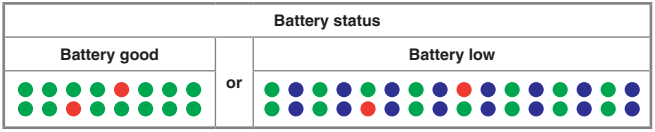


At this point turn on either the RMI-Q or RMI-QE.

**With RMI-Q switched on**

RMI-Q

**After 8 seconds**

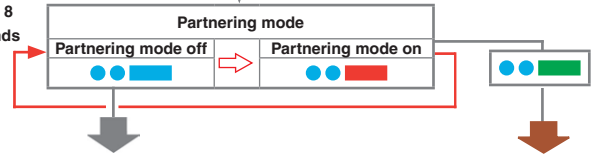


**Partnering successful**

**120 seconds probe in standby**

**20 seconds probe in standby**

If partnering is unsuccessful **"Partnering mode off"** will be displayed again after 8 seconds. Deflect the stylus for less than 4 seconds to select **"Partnering mode on"** again.

**Or for RMI-QE see next page**

## With RMI-QE switched on

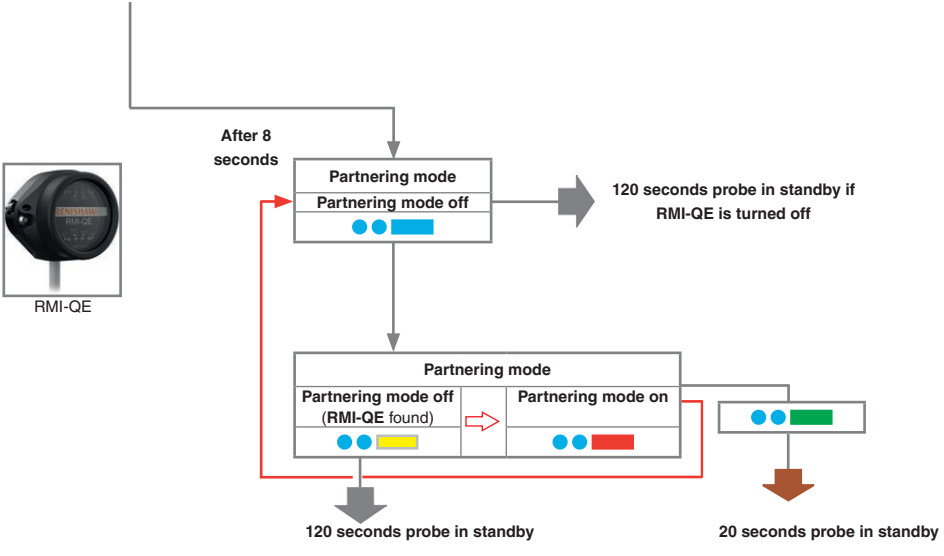


If partnering is unsuccessful **"Partnering mode off"** will be displayed again after 8 seconds.
Deflect the stylus for less than 4 seconds to select **"Partnering mode on"** again.

This page is intentionally left blank.

## RMP60 – RMI-Q partnership

System set-up can be achieved by using Trigger Logic™.

RMI-Q

**Partnering mode**

**Partnering mode off**

Switch on the RMI-Q

**SYSTEM STATUS LED**

RMI-Q in **"Partnering mode"** with empty probe location

or

**SYSTEM STATUS LED**

RMI-Q in **"Partnering mode"** with full probe location

Deflect the stylus to select **"Partnering mode on"**. Ensure this is done within 60 seconds of the RMI-Q status LED flashing green.

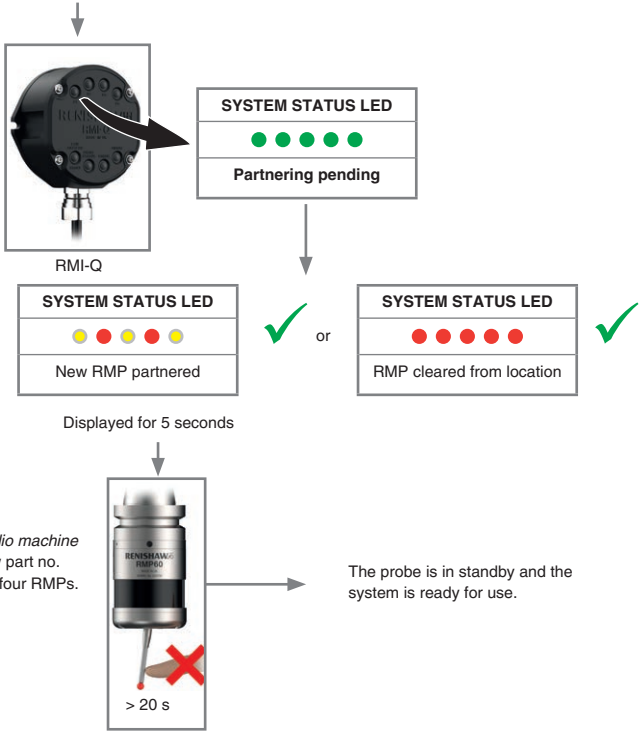


**NOTE:** Please refer to the *RMI-Q radio machine interface* installation guide (Renishaw part no. H-5687-8504) when partnering up to four RMPs.

## RMP60 – RMI-QE partnership

System set-up can be achieved by using Trigger Logic™.

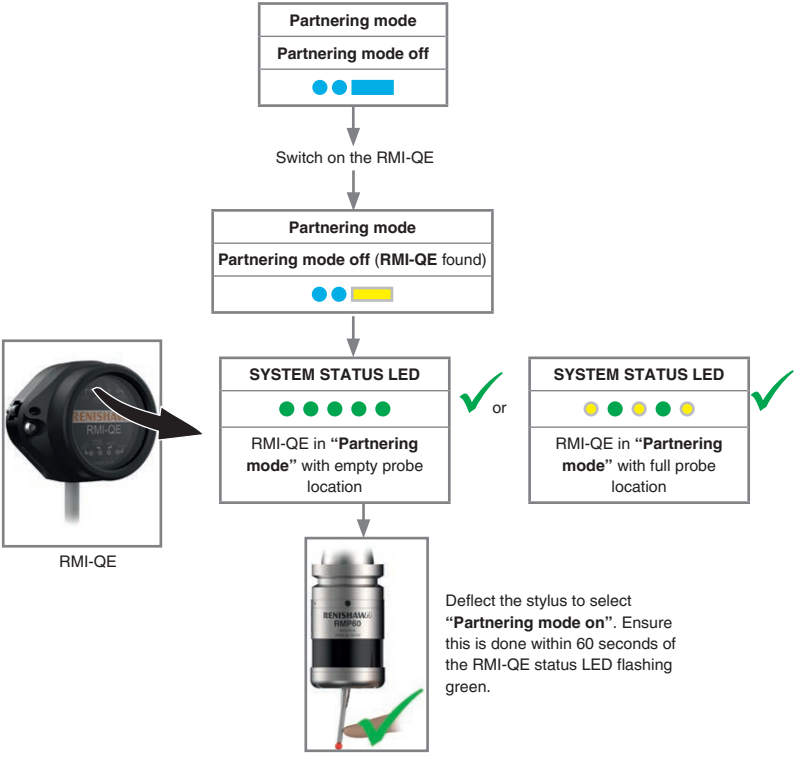

RMI-QE

**SYSTEM STATUS LED**

**Partnering pending**

**SYSTEM STATUS LED**

New RMP partnered

or

**SYSTEM STATUS LED**

RMP cleared from location

Displayed for 5 seconds

The probe is in standby and the system is ready for use.

**NOTE:** Please refer to the *RMI-QE radio machine interface* installation guide (Renishaw part no. H-6551-8501) when partnering up to four RMPs.

## Changing the probe settings when using with a RMI-Q

Probe settings can be changed using Trigger Logic™.

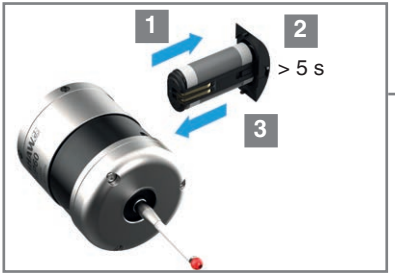


**LED check**

Deflect the stylus and hold it deflected until after the battery status has been displayed at the end of the review sequence.

| Key to the symbols | |
|---|---|
| ● | LED short flash |
| ▬ | LED long flash |
| ⇨ | Deflect the stylus for less than 4 seconds to move to the next menu option. |
| ⇩ | Deflect the stylus for more than 4 seconds to move to the next menu. |
| ⬇ | To exit, leave the stylus untouched for more than 120 seconds. |
| ⇩ | To exit, leave the stylus untouched for more than 20 seconds. |

**Battery status**

| Battery good | or | Battery low |
|---|---|---|
| ● ● ● ● ● ● ● ● | | ● ● ● ● ● ● ● ● ● ● ● ● ● ● ● ● |

To partner the probe and/or change the probe settings, go to the next page.

**CAUTION:** Do not remove the batteries whilst in configuration mode. To exit, leave the stylus untouched for more than 20 seconds.

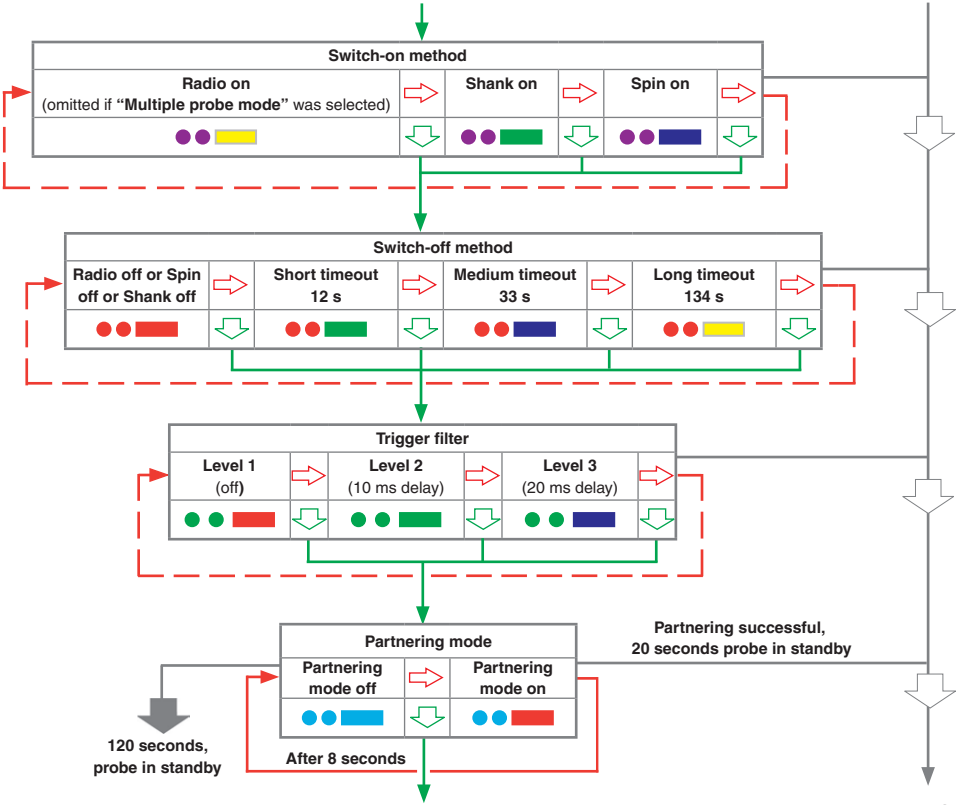
Switch-on method
Radio on
(omitted if "Multiple probe mode" was selected)
Shank on
Spin on
Switch-off method
Radio off or Spin off or Shank off
Short timeout 12 s
Medium timeout 33 s
Long timeout 134 s
Trigger filter
Level 1 (off)
Level 2 (10 ms delay)
Level 3 (20 ms delay)
Partnering mode
Partnering mode off
Partnering mode on
Partnering successful, 20 seconds probe in standby
120 seconds, probe in standby
After 8 seconds

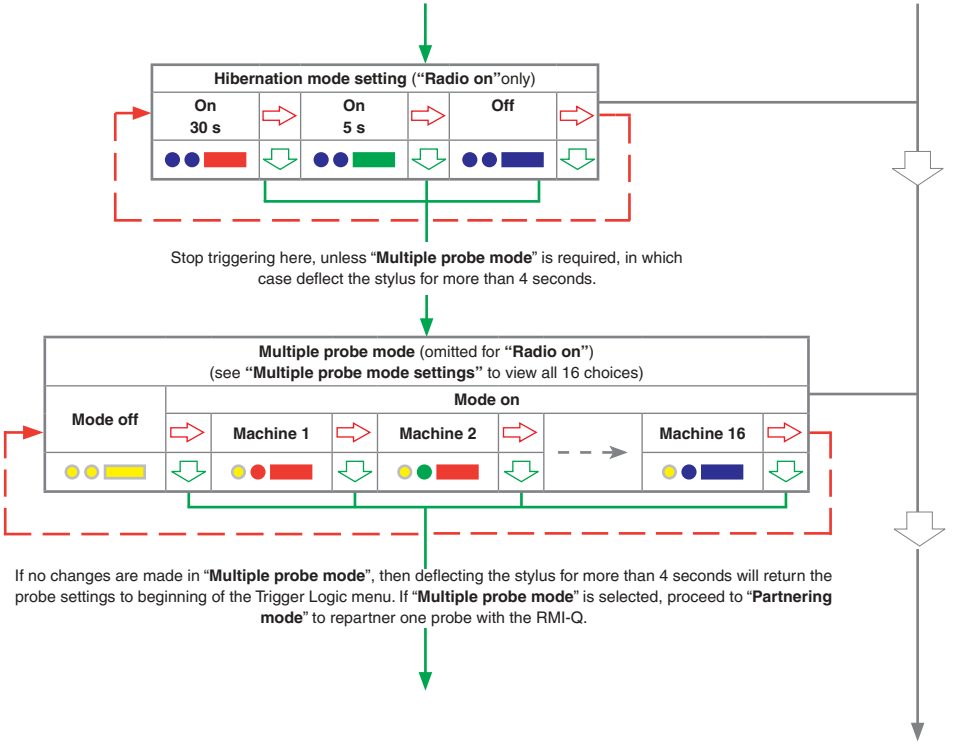
Hibernation mode setting (“Radio on”only)
On
30 s
On
5 s
Off
Stop triggering here, unless “Multiple probe mode” is required, in which case deflect the stylus for more than 4 seconds.
Multiple probe mode (omitted for “Radio on”)
(see “Multiple probe mode settings” to view all 16 choices)
Mode off
Mode on
Machine 1
Machine 2
Machine 16
If no changes are made in “Multiple probe mode”, then deflecting the stylus for more than 4 seconds will return the probe settings to beginning of the Trigger Logic menu. If “Multiple probe mode” is selected, proceed to “Partnering mode” to repartner one probe with the RMI-Q.

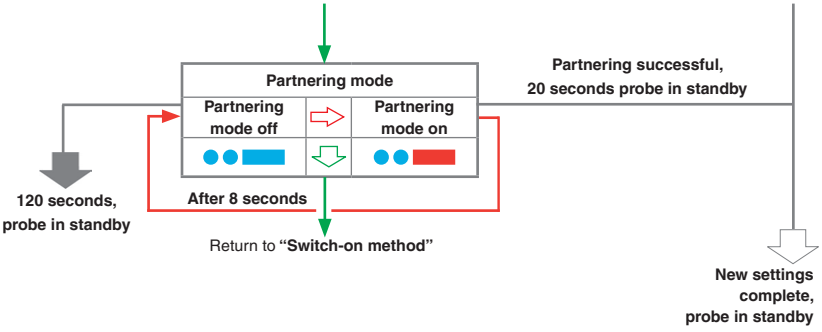


**NOTES:**

If using "**Multiple probe mode**" , refer to the *RMI-Q radio machine interface* installation guide (Renishaw part no. H-5687-8504).

Further probes require the same "**Multiple probe mode**" setting, but there is no need to be partnered with the RMI-Q.

To partner an RMP60 with an RMI-Q see RMP60 – RMI-Q partnership. Once partnering has been successful, the RMP60 will revert to "**Partnering mode off**".

## Changing the probe settings when using with a RMI-QE

Probe settings can be changed using Trigger Logic™.

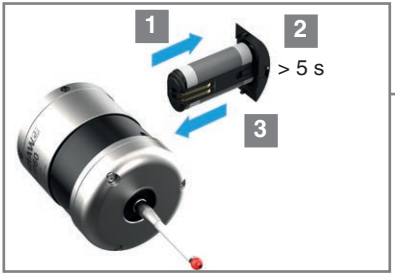


**LED check**

Deflect the stylus and hold it deflected until after the battery status has been displayed at the end of the review sequence.

| Key to the symbols | |
|---|---|
| ● | LED short flash |
| ▬ | LED long flash |
| ⇨ | Deflect the stylus for less than 4 seconds to move to the next menu option. |
| ⇩ | Deflect the stylus for more than 4 seconds to move to the next menu. |
| ⬇ | To exit, leave the stylus untouched for more than 120 seconds. |
| ⇩ | To exit, leave the stylus untouched for more than 20 seconds. |

| Battery status | | |
|---|---|---|
| Battery good | or | Battery low |
| ● ● ● ● ● ● ● ● | | ● ● ● ● ● ● ● ● ● ● ● ● ● ● ● ● |

To partner the probe and/or change the probe settings, go to the next page.

**CAUTION:** Do not remove the batteries whilst in configuration mode. To exit, leave the stylus untouched for more than 20 seconds.

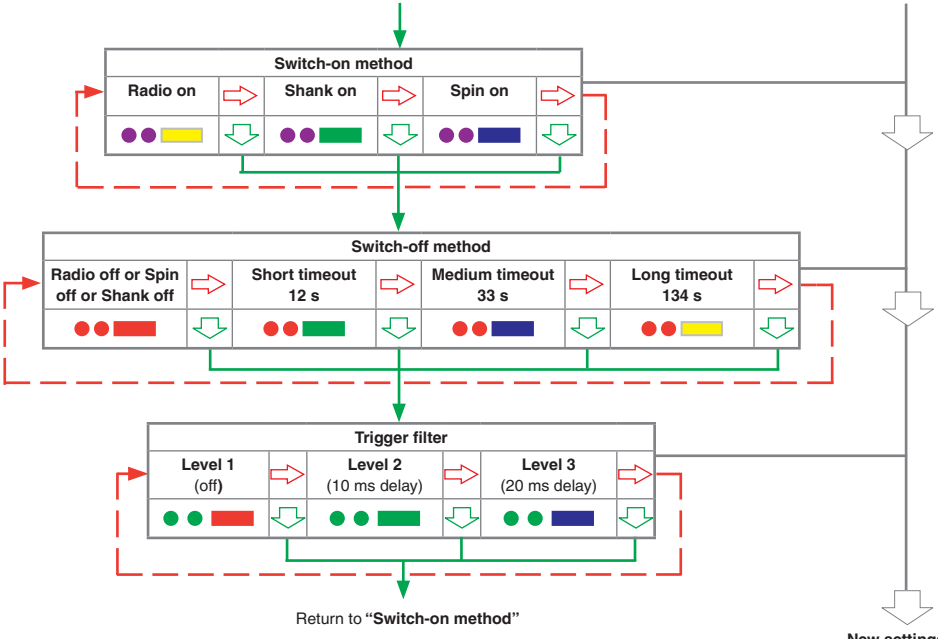


**NOTE:**

To partner an RMP60 with an RMI-QE see RMP60 – RMI-QE partnership. Once partnering has been successful, the RMP60 will revert to "**Partnering mode off**".

## Mounting the probe on a shank

✶ Shank switch only

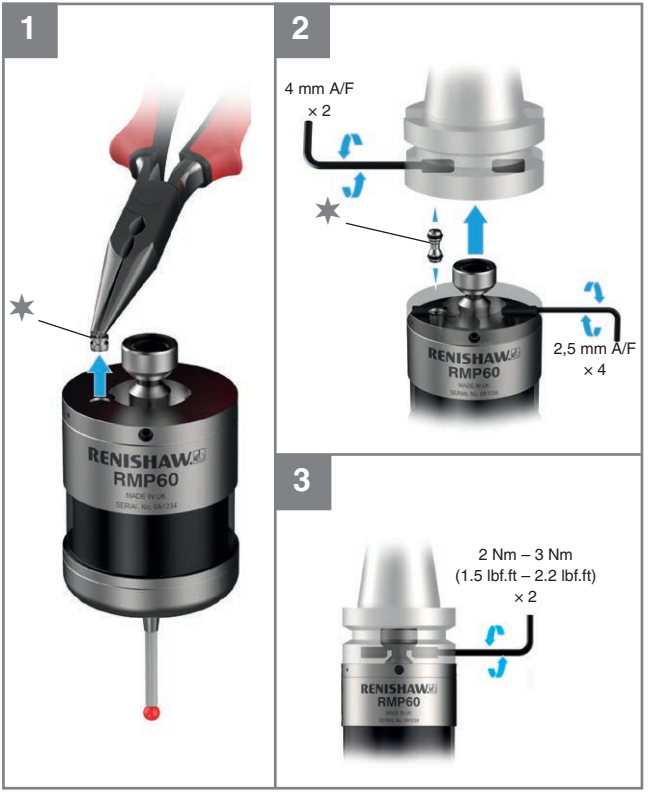

## Stylus on-centre adjustment

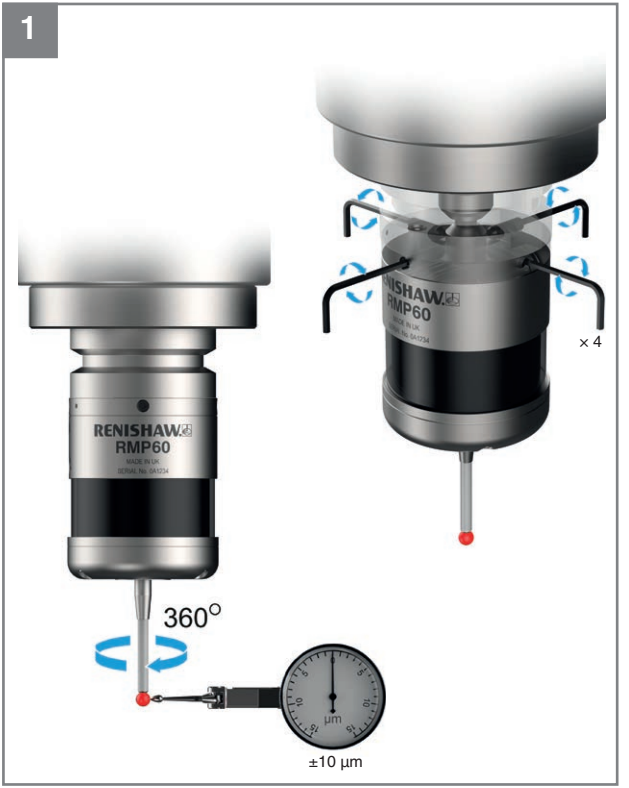

2

RENISHAW
RMP60
MADE IN UK
SERIAL No. 0A1234
360°
µm
±10 µm
× 2
6 Nm – 8 Nm
(4.4 lbf.ft – 5.9 lbf.ft)

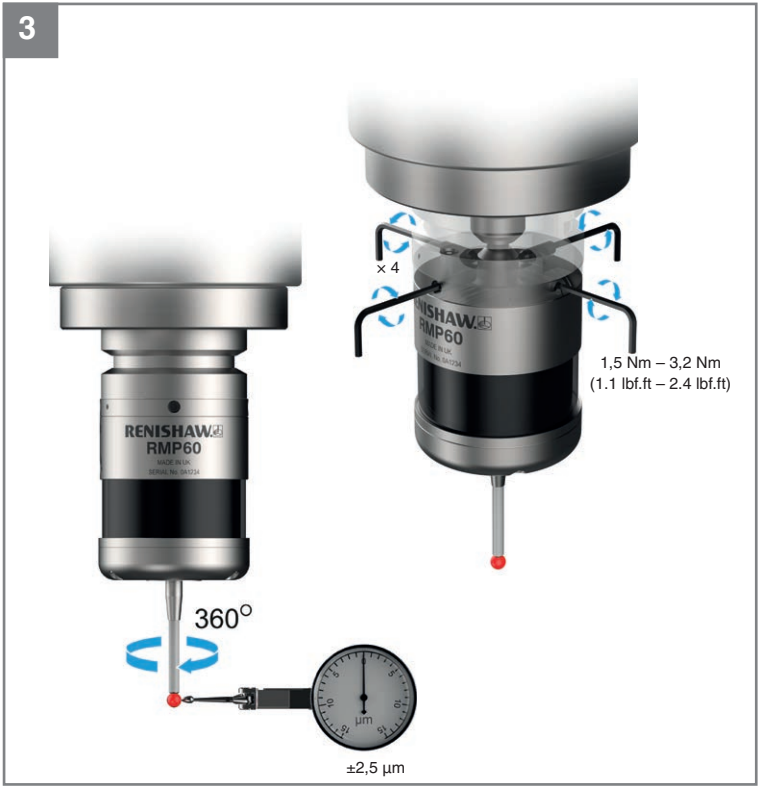
3
× 4
RENISHAW
RMP60
1,5 Nm – 3,2 Nm
(1.1 lbf.ft – 2.4 lbf.ft)
RENISHAW
RMP60
MADE IN UK
SERIAL No: 041034
360°
µm
±2,5 µm

## Stylus trigger force and adjustment

## Cleaning

Use a clean cloth.

# RMI-Q visual diagnostics

| P1, P2, P3, P4 SYSTEM STATUS LEDs | |
|---|---|
| **Off** | Probe number empty |
| | Probe number full, in standby |
| | Probe number full, operating |
| | Probe number full, 0.5 s compatibility error |
| | Selection error |
| | Partnering/clearing pending, full |
| | Partnering pending, empty |
| | Partnering complete, probe full |
| | Clearing complete, probe empty |

| KEY TO THE SYMBOLS | |
|---|---|
| | Continuously on |
| | Flashing |

| LOW BATTERY/START LED | |
|---|---|
| **Off** | Battery is okay and no M-code start/stop in progress |
| | Battery low |
| | M-code start/ stop in progress |
| | Battery low and M-code start/ stop in progress |
| | Overload error |

| SIGNAL LED | |
|---|---|
| **Off** | No probes operating |
| | Good communications |
| | Poor communications |
| | Overload error |

| PROBE STATUS LED | |
|---|---|
| | Probe triggered |
| | Probe seated |
| | Overload error |

| ERROR LED | |
|---|---|
| **Off** | No error |
| | Error |
| | Overload error |

# RMI-QE visual diagnostics

| P1, P2, P3, P4 SYSTEM STATUS LEDs | |
|---|---|
| Off | Probe number empty |
| | Probe number full, in standby |
| | Probe number full, operating |
| | Probe number full, 0.5 s compatibility error |
| | Selection error |
| | Partnering/clearing pending, full |
| | Partnering pending, empty |
| | Partnering complete, probe full |
| | Clearing complete, probe empty |

| KEY TO THE SYMBOLS | |
|---|---|
| | Continuously on |
| | Flashing |

| LOW BATTERY/START LED | |
|---|---|
| Off | Battery is okay and no M-code start/stop in progress |
| | Battery low |
| | M-code start/ stop in progress |
| | Battery low and M-code start/ stop in progress |
| | Overload error |

| SIGNAL LED | |
|---|---|
| Off | No probes operating |
| | Good communications |
| | Poor communications |
| | Overload error |

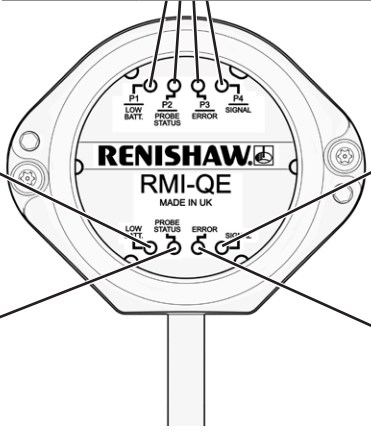


| PROBE STATUS LED | |
|---|---|
| | Probe triggered |
| | Probe seated |
| | Overload error |

| ERROR LED | |
|---|---|
| Off | No error |
| | Error |
| | Overload error |

This page is intentionally left blank.

© 2020 Renishaw plc. All rights reserved.

This document may not be copied or reproduced in whole or in part, or transferred to any other media or language, by any means, without the prior written permission of Renishaw plc.

The publication of material within this document does not imply freedom from the patent rights of Renishaw plc.

## Disclaimer

RENISHAW HAS MADE CONSIDERABLE EFFORTS TO ENSURE THE CONTENT OF THIS DOCUMENT IS CORRECT AT THE DATE OF PUBLICATION BUT MAKES NO WARRANTIES OR REPRESENTATIONS REGARDING THE CONTENT. RENISHAW EXCLUDES LIABILITY, HOWSOEVER ARISING, FOR ANY INACCURACIES IN THIS DOCUMENT.

## Trade marks

**RENISHAW** and the probe symbol used in the RENISHAW logo are registered trade marks of Renishaw plc in the United Kingdom and other countries. **apply innovation** and names and designations of other Renishaw products and technologies are trade marks of Renishaw plc or its subsidiaries.

Google Play and the Google Play logo are trademarks of Google LLC.

Apple and the Apple logo are trademarks of Apple Inc., registered in the U.S. and other countries. App Store is a service mark of Apple Inc., registered in the U.S. and other countries.

All other brand names and product names used in this document are trade names, trade marks, or registered trade marks of their respective owners.

## Warranty

Equipment requiring attention under warranty must be returned to your equipment supplier.

Unless otherwise specifically agreed in writing between you and Renishaw, if you purchased the equipment from a Renishaw company, the warranty provisions contained in Renishaw's CONDITIONS OF SALE apply. You should consult these conditions in order to find out the details of your warranty but, in summary, the main exclusions from the warranty are if the equipment has been:

- neglected, mishandled or inappropriately used; or
- modified or altered in any way except with the prior written agreement of Renishaw.

If you purchased the equipment from any other supplier, you should contact them to find out what repairs are covered by their warranty.

## China RoHS

For more information on China RoHS visit:
**www.renishaw.com/mtpchinarohs**

## EU declaration of conformity

Renishaw plc declares under its sole responsibility that the RMP60 is in conformity with all relevant Union legislation.

The full text of the EU declaration of conformity is available at:
**www.renishaw.com/mtpdoc**

## WEEE directive

The use of this symbol on Renishaw products and/or accompanying documentation indicates that the product should not be mixed with general household waste upon disposal. It is the responsibility of the end user to dispose of this product at a designated collection point for waste electrical and electronic equipment (WEEE) to enable reuse or recycling. Correct disposal of this product will help to save valuable resources and prevent potential negative effects on the environment. For more information, please contact your local waste disposal service or Renishaw distributor.

## REACH regulation

Information required by Article 33(1) of Regulation (EC) No. 1907/2006 ("REACH") relating to products containing substances of very high concern (SVHCs) is available at:
**www.renishaw.com/REACH**

## FCC Information to user (USA only)

**47 CFR Section 15.19**

This device complies with part 15 of the FCC Rules. Operation is subject to the following two conditions:

1. This device may not cause harmful interference, and
2. This device must accept any interference received, including interference that may cause undesired operation.

**47 CFR Section 15.21**

The user is cautioned that any changes or modifications not expressly approved by Renishaw plc or authorised representative could void the user's authority to operate the equipment.

**Patents**

Features of RMP60 and features of similar products are the subject of one or more of the following patents and/or patent applications:

CN 100466003
CN 101287958
CN 101482402
EP 0695926
EP 1185838
EP 1373995
EP 1425550
EP 1457786
EP 1477767
EP 1477768
EP 1576560
EP 1701234
EP 1734426
EP 1804020
EP 1931936
EP 1988439
EP 2216761
WO 2004/057552
WO 2007/028964
IN 215787
JP 3967592
JP 4237051
JP 4575781
JP 4754427
JP 4773677
JP 4851488
JP 5238749
JP 5390719
KR 1001244
TW I333052
US 2011/0002361
US 5669151
US 6776344
US 6941671
US 7145468
US 7285935
US 7441707
US 7486195
US 7665219
US 7812736
US 7821420

**雷尼绍（上海）贸易有限公司**

中国上海市静安区江场三路288号
18幢楼1楼
200436

T +86 21 6180 6416
F +86 21 6180 6418
E shanghai@renishaw.com

www.renishaw.com.cn

## 安全须知

### 用户须知

RMP60配有两节非充电型AA碱性电池。锂亚硫酰氯非充电型AA电池也可用于RMP60（请参阅RMP60安装指南［雷尼绍文档编号 H-6587-8512]）。锂电池必须符合（BS EN 62133:2013 [IEC 62133:2012]）标准。电池电量耗尽之后，请勿尝试给电池充电。

在电池、包装或随附文档上使用本符号，表示废旧电池不可与普通生活垃圾混合。 请在指定的收集点处置废旧电池。 这样可以防止由于废品处理不当对环境和人类健康造成的潜在不良影响。 请联系当地相关政府部门或废品处置服务商，了解电池的单独回收与处置规定。 在处置前，必须使所有的锂电池和充电电池完全放电或采取防短路措施。

请确保备用电池型号正确，并按照本手册 中的说明和产品上所示进行安装。（雷尼绍文档编号H-6587-8512），了解更多信息。 有关具体的电池作业、安全和处置指导原则，请参阅电池制造商的资料。

- 确保所有安装的电池正负极方向正确。
- 请勿将电池存放在阳光直射或淋雨的地方。
- 请勿将电池加热或弃入火中处置。
- 避免将电池强制放电。
- 请勿使电池短路或强制放电。
- 请勿对电池进行拆解、穿透、施加过度压力，或使其变形。
- 请勿吞咽电池。
- 请将电池放在儿童无法接触的地方。
- 请将电池放在儿童无法接触的地方。
- 不要将新旧电池或不同的电池类型混用，因为这会缩短电池寿命并损坏电池。
- 在运输电池或本产品时，请确保符合国际和国家电池运输条例。

在运输电池或本产品时，请确保符合国际和国家电池运输条例。

**注：** 锂电池被定义为危险品，空运有严格的控制。为了减少运输延期的风险，无论出于何种原因，若您需要将产品返回RMP60雷尼绍，请勿包含任何电池。

在所有涉及使用机床的应用中，建议采取保护眼睛的措施。

RMP60有一个玻璃窗口。如果玻璃破碎，请务必小心，以免受伤。

### 机床供应商/安装商须知

机床制造商有责任确保用户了解操作中存在的任何危险，包括雷尼绍产品说明书中所述的危险，并应确保提供充分的防护装置和安全联动装置。

在某些情况下，测头信号可能错误指示测头已复位状态。切勿单凭测头信号来停止机床运动。

### 设备安装商须知

雷尼绍所有设备的设计均符合相关的EU和FCC监管要求l为使产品按照这些规定工作，设备安装商有责任保证遵守以下指导原则：

- 任何接口的安装位置**必须**远离任何潜在的电噪声源，如变压器、伺服系统驱动装置等；
- 所有0伏/接地连接都应当连接到机床接地终端上（“接地终端”是所有设备地线和屏蔽电缆的单点回路）。这一点非常重要，不遵守此规定会造成接地之间存在电位差；
- 所有屏蔽装置都必须按使用说明书中所述进行连接；
- 电缆线路不得与电机电源电缆等高电流源并行或靠近高速数据传输线；
- 电缆长度应始终保持最短。

### 设备操作

如果设备使用方式与制造商要求的方式不符，设备提供的保护功能可能会减弱。

# Radio approvals

| | | |
|---|---|---|
| Canada: | RMP60QE | IC ID: 3928A-RMP60QE |
| | RMP60MQE | IC ID: 3928A-RMP60QE |
| | PP60QE | IC ID: 3928A-RMP60QE |

This device complies with Industry Canada licence-exempt RSS standard(s). Operation is subject to the following two conditions: (1) this device may not cause interference, and (2) this device must accept any interference, including interference that may cause undesired operation of the device.

Le présent appareil est conforme aux CNR d'Industrie Canada applicables aux appareils radio exempts de licence. L'exploitation est autorisée aux deux conditions suivantes : (1)l'appareil ne doit pas produire de brouillage, et (2) l'utilisateur de l'appareil doit accepter tout brouillage radioélectrique subi, même si le brouillage est susceptible d'en compromettre le fonctionnement.

| | | |
|---|---|---|
| Japan: | RMP60QE | R 205-200013 |
| | RMP60MQE | R 205-200013 |
| | PP60QE | R 205-200013 |

This device is granted pursuant to the Japanese Radio Law and the Japanese Telecommunications Business Law This device should not be modified (otherwise the granted designation number will become invalid).

| | | |
|---|---|---|
| USA: | RMP60QE | FCC ID: KQGMP60QE |
| | RMP60MQE | FCC ID: KQGMP60QE |
| | PP60QE | FCC ID: KQGMP60QE |

**Renishaw plc**
New Mills, Wotton-under-Edge
Gloucestershire, GL12 8JR
United Kingdom

T +44 (0)1453 524524
F +44 (0)1453 524901
E uk@renishaw.com
www.renishaw.com

RENISHAW
apply innovation™

**For worldwide contact details, visit**
**www.renishaw.com/contact**

H-6587-8500-01