Datasheet

AC4490

Version 4.7

Revision History

Version	Date	Notes	Contributors	Approver
4.2	16 Dec 2013	Separated into two separate docs (Hardware Integration Guide and User Guide). Information in this document was originally part of the User Guide. Added a Related Documents section. Note: Starting at Rev 4.2 to match the current User Guide.		Sue White
4.3	09 Apr 2014	Updated Serial Interface information to: Serial Interface and Digital I/O: 3.3V TTL only, all part numbers UART baud rates from 1200 bps to 115,200 bps		Chris Downey
4.4	28 Apr 2014	Updated Serial Interface information to: Serial Interface and I/O: 3.3V TTL UART baud rates from 1200 bps to 115,200 bps		Chris Downey
4.5	4 Aug 2014	Added Approved Antenna List		Chris Downey
4.6	18 May 2017	Removed references to EOL part numbers		Jonathan Kaye
4.7	21 Oct 2022	Updates for Revision 2.0 hardware (AC4490-1000M, AC4490LR-1000M): Added Approved Antenna List (for revision 2.0 of hardware). Added Revision 2.0 Hardware section. Updated to Datasheet Updated to latest documentation template Reviewed and updated regulatory sections 12.4, 12.5, 12.6.	Dave Drogowski Ryan Urness Raj Khatri	Jonathan Kaye

© Copyright 2022 Laird Connectivity
All Rights Reserved
Americas: +1-800-492-2320
Europe: +44-1628-858-940
Hong Kong: +852-2762-4823

CONTENTS

1 AC4490 RF Transceiver 5
1.1 Overview 5
2 Features 5
2.1 Networking and Security 5
2.2 Easy to Use 5
3 Detailed Specifications 5
4 Electrical Specifications 7
5 Hardware 10
5.1 Pin Definitions 10
5.2 Pin Descriptions 12
6 Serial Interface 14
6.1 Serial Communications 14
6.2 Asynchronous Operation 14
6.3 Parity 14
6.4 Serial Interface Baud Rate 15
7 Radio Interface 16
7.1 Protocol Status / Receive Acknowledgement 16
7.2 Flow Control 16
8 Security 18
9 AC4490 Mechanical and Layout 20
9.1 Mechanical Drawings 20
10 AC4490 Timing Diagrams 23
11 Ordering Information 24
11.1 Product Marketing Name 24
11.2 Developer Kit Part Number 24
12 Compliance Information 24
12.1 AC4490- 1x1 24
12.2 Agency Identification Numbers 24
12.3 Approved Antenna List 25
12.4 FCC Requirements for Modular Approval 25
12.5 ISED Requirements for Modular Approval 27
12.6 Antenna Requirements 28
12.7 Channel Warning 29
13 Revision 2.0 Hardware (AC4490-1000M, AC4490LR-1000M) 29
14 Appendix I: 5V to 3.3V Levels 29
14.1 Voltage Level Conversion IC's 29

© Copyright 2022 Laird Connectivity
All Rights Reserved
Americas: +1-800-492-2320
Europe: +44-1628-858-940
Hong Kong: +852-2762-4823

14.2 Passive Resistor Voltage Divider 29
15 Appendix II: Sample Power Supply 30
15.1 Bill of Materials 30
15.2 Schematic 31
15.3 PCB Layout 31
16 Appendix III: Product Throughput 33
17 Related Documents and Files 34
18 Additional Assistance 34

© Copyright 2022 Laird Connectivity
All Rights Reserved
Americas: +1-800-492-2320
Europe: +44-1628-858-940
Hong Kong: +852-2762-4823

1 AC4490 RF Transceiver

The compact AC4490 900 MHz transceiver can replace miles of cable in harsh industrial environments. Using field-proven frequency hopping spread spectrum (FHSS) technology which needs no additional FCC licensing in the Americas, OEMs can easily make existing systems wireless with little or no RF expertise.

1.1 Overview

The AC4490 is a cost effective, high performance, frequency hopping spread spectrum transceiver designed for integration into OEM systems operating under FCC part 15.247 regulations for the 900 MHz ISM band.

AC4490 transceivers provide an asynchronous TTL level serial interface for OEM Host communications, which include both system and configuration data. The Host supplies system data for transmission to other Host(s). Configuration data is stored in the on-board EEPROM. All frequency hopping, synchronization, and RF system data transmission/reception is performed by the transceiver.

To boost data integrity and security, the AC4490 uses Laird's field-proven FHSS technology featuring optional Data-Encryption Standards (DES). Fully transparent, these transceivers operate seamlessly in serial cable replacement applications.

AC4490 transceivers can operate in Point-to-Point, Point-to-Multipoint, Client-Server, or Peer-to-Peer architecture. One transceiver is configured as a server with one or many client-configured transceivers synchronized to it. To establish synchronization between transceivers, the server emits a beacon; upon detecting a beacon an RF link is established and a GPIO is toggled to signify to the host that the link is active.

This document contains information about the hardware and software interface between a Laird AC4490 transceiver and an OEM Host. Information includes the theory of operation, specifications, interface definition, configuration information and mechanical drawings. The OEM is responsible for ensuring the final product meets all appropriate regulatory agency requirements listed herein before selling any product.

Note: Unless mentioned by name, the AC4490 module is referred to as the "radio" or "transceiver". Individual naming is used to differentiate product specific features. The host (PC / Microcontroller / Any device to which the AC4490 module is connected) will be referred to as "OEM Host".

2 Features

2.1 Networking and Security

- Generic I/O digital lines and integrated DAC/ADC functions
- Retries and Acknowledgements
- API Commands to control packet routing and acknowledgement on a packet-by-packet basis
- Frequency Hopping Spread Spectrum for security and interference rejection
- Customizable RF Channel number and system ID
- Dynamic link analysis, remote radio discovery
- Low latency and high throughput
- Hardware Protocol Status monitoring

2.2 Easy to Use

- Continuous 76.8 Kbps RF data stream
- Software selectable interface baud rates from 1200 bps to 115.2 Kbps
- Low cost, low power and small size ideal for high volume, portable and battery powered applications
- All modules are qualified for Industrial temperatures (-40° C to 85° C)
- Advanced configuration available using AT commands

3 Detailed Specifications

Table 1: AC4490 Specification table

GENERAL	
20 Pin Interface Connector	Molex 87759-0030, mates with Samtec SMM-110-02-S-D
RF Connector	MMCX jack Johnson Components 135-3711-822

© Copyright 2022 Laird Connectivity
All Rights Reserved
Americas: +1-800-492-2320
Europe: +44-1628-858-940
Hong Kong: +852-2762-4823

GENERAL	
Antenna	AC4490-1x1: Customer must provide AC4490-200: External antenna with MMCX plug or integral antenna AC4490-1000: External antenna with MMCX plug
Serial Interface and I/O	3.3V TTL UART baud rates from 1200 bps to 115,200 bps
Power Consumption (typical)	Duty Cycle (Tx = Transmit, Rx = Receive)

	10%Tx	50%Tx	100%	100%Rx	Pwr-down	Deep Sleep
1x1	33 mA	54 mA	80 mA	28 mA	15 mA	3 mA
200	38 mA	68 mA	106 mA	30 mA	19 mA	6 mA
1000	130 mA	650 mA	1300 mA	30 mA	19 mA	6 mA

Channels	3 Channel Sets comprising 56 total channels. AC4490-1x1: 3 Channel Sets AC4490-200: 3 Channel Sets AC4490-1000: 2 Channel Sets
Security	One byte System ID. 56-bit DES encryption key
Interface Buffer Size	Input/Output: 256 bytes each

TRANCEIVER	
Frequency Band	902 – 928 MHz
RF Data Rate	76.8 Kbps fixed
RF Technology	Frequency Hopping Spread Spectrum (FHSS)

Output Power

	Conducted (no antenna)	EIRP (3 dBi gain antenna)
1x1	10 mW typical	20 mW typical
200	100 mW typical	200 mW typical
1000	743 mW typical	1486 mW typical

Supply Voltage

1x1	VCC: 3.3 V, ±50 mV ripple VPA: 3.3 V, ±50 mV ripple
200	VCC: 3.3 – 5.5 V, ±50 mV ripple VPA: 3.3 – 5.5 V, ±50 mV ripple
1000*	VCC: 3.3 – 5.5 V ±50 mV ripple VPA: 3.3 ±3%, ±100 mV ripple

* VCC & VPA may be tied together, provided the supply voltage never falls below 3.3 V and is capable of supplying 1.5 A of current. VCC & VPA are internally connected on the AC4490-200 only.

Sensitivity

RF Data Rate	Typical
76.8 Kbps	-100 dBm
76.8 Kbps (AC4490LR-1000)	-110 dBm

Note: Receive sensitivity listed for US and Australian modes. Radios ordered per

© Copyright 2022 Laird Connectivity
All Rights Reserved
Americas: +1-800-492-2320
Europe: +44-1628-858-940
Hong Kong: +852-2762-4823

TRANCEIVER		
	Brazilian regulations have a receive sensitivity of -80 dBm.	
EEPROM write cycles	20000	
Hop period	20 ms	
Range, Outdoor Line of Site (based on 3dBi gain antenna)	1x1	Up to 1 mile
	200	Up to 4 miles
	1000	Up to 20 miles
	LR1000	Up to 40 miles
	Note: Distance based on US and Australian Modes	

ENVIRONMENTAL	
Temperature (Operational)	-40° C to +80° C (-40° F to +176° F)
Temperature (Storage)	-50° C to +85° C (-58°F to +185° F)
Humidity (non-condensing)	10% - 90%

PHYSICAL		
Dimensions	Transceiver w/ MMCX connector:	1.65” x 1.9” x 0.20”
	Transceiver w/ integral antenna:	1.65” x 2.65” x 0.20”
	AC4490-1x1:	1.00” x 1.00” x 0.162”

CERTIFICATIONS		
	AC4490-200	AC4490-1000 /AC4490LR-1000
FCC Part 15.247	KQL-4x90200	KQL-AC4490
Industry Canada (IC)	2268C-4x90200	2268C-44901000

Caution! ESD Sensitive Component. Proper ESD precautions should be used when handling this device to prevent permanent damage.

External ESD protection is required to protect this device from damage as required to pass IEC 61000-4-2 or ISO 10605 based on end system application.

4 Electrical Specifications

Table 2: Input Voltage Characteristics

Signal Name	AC44901x1 / AC4490-1000M				AC4490-200X				Unit
	High Min.	High Max.	Low Min.	Low Max.	High Min.	High Max.	Low Min.	Low Max.	
RXD	2.31	3.3	0	0.99	2	5.5	0	0.8	V
GI0	2.31	3.3	0	0.99	2	5.5	0	0.8	V
RTS	2.31	3.3	0	0.99	2	5.5	0	0.8	V
$\overline{\text{Test}}$	2.31	3.3	0	0.99	2	5.5	0	0.8	V

© Copyright 2022 Laird Connectivity
All Rights Reserved
Americas: +1-800-492-2320
Europe: +44-1628-858-940
Hong Kong: +852-2762-4823

Signal Name	AC44901x1 / AC4490-1000M				AC4490-200X				Unit
	High Min.	High Max.	Low Min.	Low Max.	High Min.	High Max.	Low Min.	Low Max.	
GI1	2.31	3.3	0	0.99	2	5.5	0	0.8	V
UP_RESET	0.8	3.3	0	0.6	0.8	5	0	0.6	V
$\overline{\text{CMD}}$ /Data	2.31	3.3	0	0.99	2	5.5	0	0.8	V
AD In	N/A	3.3	0	N/A	N/A	3.3	0	N/A	V

Table 3: Output Voltage Characteristics

Signal Name	Module Pin	1x1 Pin	Type	High Min.	Low Max.	Unit
GO0	1	19	O	2.5 @ 8 mA	0.4 @ 8 mA	V
TXD	2	6	O	2.5 @ 2 mA	0.4 @ 2 mA	V
$\overline{\text{Hop Frame}}$	6	1	O	2.5 @ 2 mA	0.4 @ 2 mA	V
$\overline{\text{CTS}}$	7	9	O	2.5 @ 2 mA	0.4 @ 2 mA	V
GO1	9	19	O	2.5 @ 2 mA	0.4 @ 2 mA	V
RSSI	13	12	O	See Figure 1	See Figure 1	V
DA_Out	19	20	O	N/A	N/A	V[1]
$\overline{\text{In Range}}$	20	18	O	2.5 @ 2 mA	0.4 @ 2 mA	V

1. DA_Out is an unbuffered, high impedance output and must be buffered by the OEM Host when used.

© Copyright 2022 Laird Connectivity
All Rights Reserved
Americas: +1-800-492-2320
Europe: +44-1628-858-940
Hong Kong: +852-2762-4823

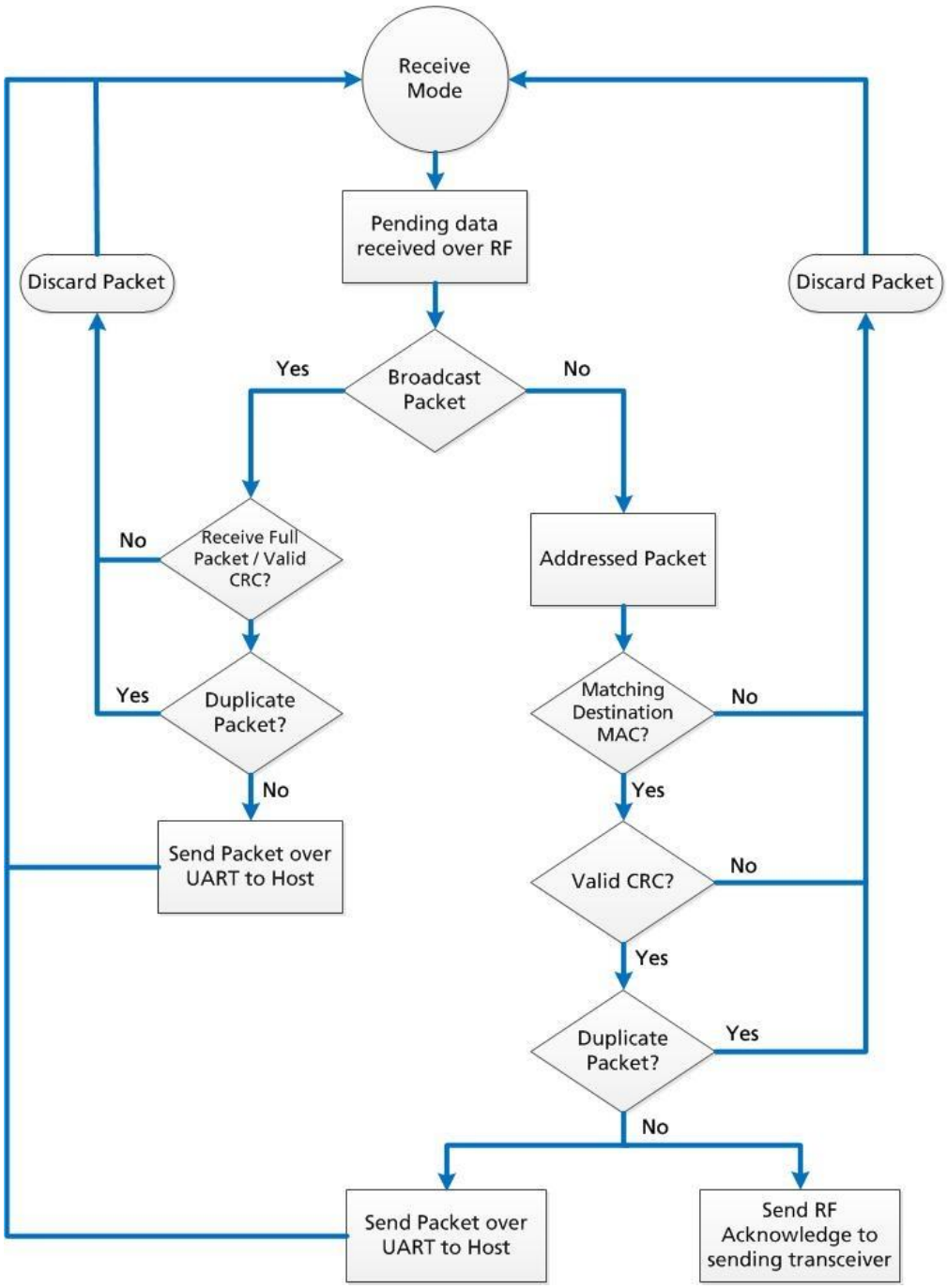

Figure 1: Pending RF Buffer Flow

© Copyright 2022 Laird Connectivity
All Rights Reserved
Americas: +1-800-492-2320
Europe: +44-1628-858-940
Hong Kong: +852-2762-4823

5 HARDWARE

5.1 Pin Definitions

The AC4490 has a simple interface that allows OEM host communications with the transceiver and shows the connector pin numbers and associated functions.

Table 4: AC4490 Pin Definitions

Module Pin	1x1 Pin	Type	Signal Name	Function
1	4	O	GO0	Generic Output pin
2	6	O	TXD	Serial data output from the module to the OEM Host.
3	7	I	RXD	Serial data input to the module from the OEM Host.
4	5[1]		GI0	Generic Input pin
5	3	GND	GND	Signal Ground
6		O	$\overline{\text{Hop Frame}}$	Pulses low when the transceiver is hopping frequencies.
7	9	O	$\overline{\text{CTS}}$	Clear to Send – Active Low when the transceiver is ready to accept data for transmission. CTS should be monitored by the OEM Host & data flow to the radio should cease when CTS is High.
8	10[1]	I	RTS	Request to Send – When enabled in EEPROM, the OEM Host can take this High when it is not ready to accept data from the transceiver. **Note:** Keeping RTS High for too long can cause data loss.
9	19	O	GO1	Generic Output pin
10	2	PWR	VCC	Powers the radio and microcontroller. Must be connected. **1x1**: 3.3 V, +/- 50 mV ripple **200**: 3.3 – 5.5 V, +/- 50 mV ripple (Pin 10 is internally connected to Pin 11) **1000**: 3.3 – 5.5V, +/-50mV ripple
11	11	PWR	VPA	Powers the power-amplifier and draws most current when in TX mode. Must be connected. **1x1**: 3.3 V, +/- 50 mV ripple **200**: 3.3 – 5.5 V, +/- 50 mV ripple (Pin 11 is internally connected to Pin 10) **1000**: 3.3 V +/- 3%, +/- 100 mV ripple
12	23	I	$\overline{\text{Test}}$	Test Mode – When pulled logic Low and then applying power or resetting, the transceiver's serial interface is forced to a 9600, 8-N-1 rate. To exit, the transceiver must be reset or power-cycled with Test Mode logic High.
13	12	O	RSSI	Received Signal Strength - An analog output giving an instantaneous indication of received signal strength. Only valid while in Receive Mode.
14	21[1]	I	GI1	Generic Input pin
15	16	I	UP_RESET	RESET – Controlled by the AC4490 for power-on reset if left unconnected. After a stable power-on reset, a logic High pulse will

© Copyright 2022 Laird Connectivity
All Rights Reserved
Americas: +1-800-492-2320
Europe: +44-1628-858-940
Hong Kong: +852-2762-4823

Module Pin	1x1 Pin	Type	Signal Name	Function
				reset the transceiver.
16	13	GND	GND	Signal Ground
17	17	I	$\overline{\text{CMD}}$ /Data	When logic Low, the transceiver interprets OEM Host data as command data. When logic High, the transceiver interprets OEM Host data as transmit data.
18	15[2]	I	AD In	10-bit Analog Data Input
19	20[3]	O	DA_Out	10-bit Analog Data Output
20	18	O	$\overline{\text{In_Range}}$	When logic Low, a client is in range of a server on same Channel and System ID. Always low on a server radio.
N/A	14	RF	RF Port	RF Interface
N/A	22	I	$\overline{\text{Reset}}$	Active Low version of UP_RESET. If RESET is used, UP_RESET should be left floating and if UP_RESET is used, RESET should be left floating.

1. Must be tied to VCC or GND if not used. Should never be permitted to float.
2. If used, requires a shunt 0.1 µF capacitor at pin 15 followed by a series 1 k resistor.
3. If used, requires a series 1 k resistor at pin 20 followed by a shunt 0.1 µF capacitor.

Notes: All I/O is 3.3 V TTL with exception of 5 V inputs on AC4490-200.
All inputs are weakly pulled High (10 k) and may be left floating during normal operation.
Minimum connections: VCC, VPA, GND, TXD, & RXD.
Signal direction depends on the transceiver.
Leave unused pins disconnected.

© Copyright 2022 Laird Connectivity
All Rights Reserved
Americas: +1-800-492-2320
Europe: +44-1628-858-940
Hong Kong: +852-2762-4823

5.2 Pin Descriptions

5.2.1 Generic I/O

Both GI0 and GI1 pins serve as generic input pins and both GO0/1 pins server as generic output pins. Reading and writing of these pins can be performed using CC Commands. These pins alternatively serve as control pins when modem mode is enabled.

5.2.2 TXD & RXD

Serial TTL	The AC4490-200 accepts 3.3 or 5 V DC TTL level asynchronous serial data on the RXD pin and interprets that data as either command data or transmit data. Data is sent from the transceiver, at 3.3V levels, to the OEM host via the TXD pin. **Note:** The AC4490-1000 and AC4490-1x1 transceivers **only** accept 3.3 V level signals.

5.2.3 $\overline{\text{CTS}}$

The AC4490 has an interface buffer size of 256 bytes. If the buffer fills up and more bytes are sent to the transceiver before the buffer can be emptied, data loss occurs. The transceiver prevents this loss by asserting CTS High as the buffer fills up and asserting CTS Low as the buffer is emptied. CTS On and CTS On Hysteresis control the operation of CTS. CTS On specifies the amount of bytes that must be in the buffer for CTS to be disabled (logic High). Even while CTS is disabled, the OEM host can send data to the transceiver, but it should do so carefully.

Note: The CTS On and CTS On Hysteresis bytes of the EEPROM can be set to 1, in which case CTS goes high as data is sent in and low when the buffer is empty.

5.2.4 GND

Signal Ground. Pins are internally connected.

5.2.5 RTS

With RTS disabled, the transceiver sends any received data to the OEM host when it is received. However, some OEM hosts are not able to accept data from the transceiver all of the time. With RTS enabled, the OEM host can prevent the transceiver from sending data by setting RTS logic High. Once RTS is set logic Low, the transceiver can send packets to the OEM host as they are received.

Note: Leaving RTS logic high for too long can cause data loss once the 256 byte receive buffer fills up.

5.2.6 $\overline{\text{Test}}$

When pulled logic Low before applying power or resetting, the transceiver's serial interface is forced to 9600 baud, 8-N-1 (8 data bits, No parity, 1 stop bit). To exit, the transceiver must be reset or power-cycled with Test pin logic High. This pin is used to recover transceivers from unknown baud rates only. It should not be used in normal operation. Instead, the transceiver Interface Baud Rate should be programmed to 9600 baud if that rate is desired for normal operation.

Note: Laird does not recommend permanently grounding the Forced_9600 pin. This mode was intended for recovering transceivers from unknown settings and was not intended to be used in real-time communications. The following modes are affected:

Modem mode = disabled
Parity mode = disabled
Interface Timeout = 0x40

It is also possible that future modes will be disabled by grounding Forced_9600.

© Copyright 2022 Laird Connectivity
All Rights Reserved
Americas: +1-800-492-2320
Europe: +44-1628-858-940
Hong Kong: +852-2762-4823

5.2.7 RSSI

Instantaneous RSSI

Received Signal Strength Indicator can be used by the OEM Host as an indication of instantaneous signal strength at the receiver. The OEM Host must calibrate RSSI without an RF signal present at the receiver.

Calibration is accomplished by following these steps:

1. Power up only one transceiver in the coverage area.
2. Measure the RSSI to obtain the minimum value with no other signal present.
3. Power up another transceiver and begin sending data from that transceiver to the transceiver being measured. Make sure the two transceivers are separated by approximately ten feet.
4. Measure the peak RSSI, while the transceiver is actively receiving data from the remote transceiver, to obtain a maximum value at full signal strength.

The following equation approximates the RSSI curve:

$$\textit{Signal Strength (dBm)} = (-46.9 \times VRSSI) - 53.9$$

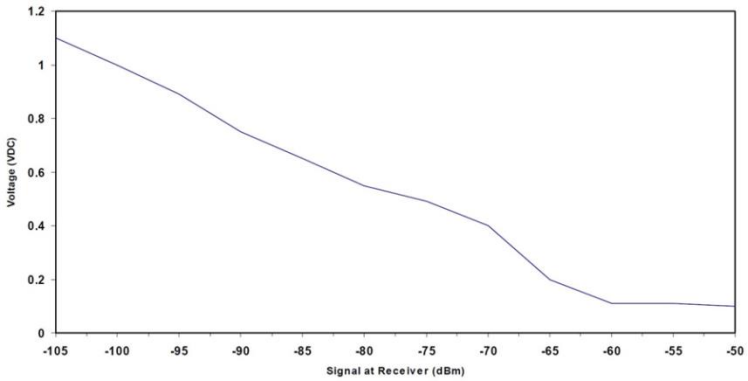

Figure 2: RSSI Voltage vs. Received Signal Strength

Validated RSSI

Because RSSI is only valid when the local transceiver is receiving an RF packet from a remote transceiver, instantaneous RSSI is tricky to use. Therefore, the transceiver stores the most recent valid RSSI value. The OEM host issues the Report Last Good RSSI command to request that value. Additionally, validated RSSI can be obtained from Receive Packet and Send Data Complete API commands and from the Probe command. Validated RSSI is not available at the RSSI pin.

5.2.8 UP_Reset

UP_Reset provides a direct connection to the reset pin on the AC4490 microprocessor and is used to force a soft reset.

5.2.9 $\overline{\text{CMD}}$ /Data

When $\overline{\text{CMD}}$ is held High the transceiver interprets incoming OEM Host data as transmit data to be sent to other transceivers.

When $\overline{\text{CMD}}$ Data is held Low the transceiver interprets OEM Host data as command data.

5.2.10 AD In

AD In can be used as a cost savings to replace Analog-to-Digital converter hardware. Reading of this pin can be performed locally using the Read ADC command. See the AC4490 User Guide for command descriptions.

© Copyright 2022 Laird Connectivity
All Rights Reserved
Americas: +1-800-492-2320
Europe: +44-1628-858-940
Hong Kong: +852-2762-4823

5.2.11 $\overline{\text{In Range}}$

Asserts logic Low when a client transceiver is in range of a server radio operating on the same RF Channel and System ID. If a client cannot hear a server for the amount of time defined by Range Refresh, it will drive $\overline{\text{In_Range}}$ high and enter search mode looking for a server. When a server is detected, $\overline{\text{In_Range}}$ will always report Low on server transceivers.

6 Serial Interface

For the OEM host and a transceiver to communicate via serial interface they must share a serial data rate. Refer to the following sections to ensure that the OEM host data rate matches the serial interface baud rate.

6.1 Serial Communications

The AC4490 is a TTL device which may connect to a compatible UART (Universal Asynchronous Receiver Transmitter) or level translator to connect to serial devices. The UART mainly transmits or receives serial data.

6.2 Asynchronous Operation

Since there is no separate clock in asynchronous operation, the receiver must use a fixed baud rate and START and STOP bits to synchronize with the transmitter. Figure 3 shows a typical asynchronous mode signal.

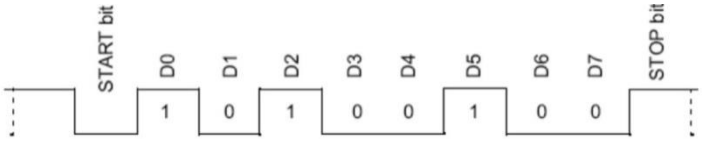

Figure 3: Asynchronous Mode Signal

The UART outputs and inputs logic level signals on the TX and RX pins. The signal is high when no data is being transmitted and low when transmission begins. The signal stays low for the duration of the START bit and is followed by the data bits (LSB first). The STOP bit follows the last data bit and is always high. When the STOP bit finishes, the START bit of the next transmission can occur.

6.3 Parity

A parity bit is used to provide error checking for a single bit error. When a single bit is used, parity can be either even or odd. Even parity means that the number of ones in the data plus the parity equals an even number and vice-versa. The ninth data bit can be used as a parity bit if the data format requires eight data bits and a parity bit as shown in Figure 4.

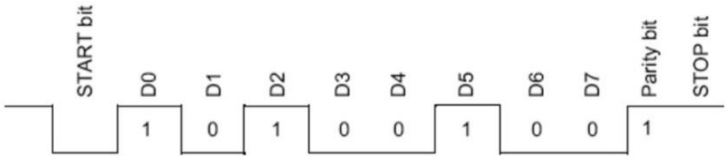

Figure 4: Even Parity Bit

Note: Enabling parity cuts throughput and the interference buffer in half.

Table 5 displays supported asynchronous serial data formats:

Table 5: Supported Serial Formats

Data Bits	Parity	Stop Bits	Transceiver Programming Requirements
8	N	1	Parity Disabled
7	N	2	Parity Disabled

© Copyright 2022 Laird Connectivity
All Rights Reserved
Americas: +1-800-492-2320
Europe: +44-1628-858-940
Hong Kong: +852-2762-4823

Data Bits	Parity	Stop Bits	Transceiver Programming Requirements
7	E, O, M, S	1	Parity Disabled
9	N	1	Parity Enabled
8	N	2	Parity Enabled
8	E, O, M, S	1	Parity Enabled
7	E, O, M, S	2	Parity Enabled
Mark (M) corresponds to 1 & Space (S) corresponds to 0			

6.4 Serial Interface Baud Rate

This two-byte value determines the baud rate used for communicating over the serial interface between the OEM Host and the transceiver. This rate is independent of the RF baud rate, which is fixed at 76.8 Kbps. Table 6 lists values for some common baud rates.

Note: Baud rates below 1200 baud are not supported.

For a baud rate to be valid, the calculated baud rate must be within ±3% of the OEM host baud rate. If the Test pin (pin 12) is pulled Logic Low at reset, the baud rate will be forced to 9600. For baud rate values other than those shown in Table 6, the following equations can be used:

$$\text{BAUD} = \frac{14.7456 \times 10^6}{64 \times Desired\ Baud}$$

$$BaudH = Always\ 0$$

$$BaudL = Low\ 8\ bits\ of\ BAUD\ (base\ 16)$$

Table 6: Baud Rate / Interface Timeout

Baud Rate	BaudL (0x42)	BaudH (0x43)	Minimum Interface Timeout (0x58)	Stop Bit Delay (0x3F)
115200	0xFE	0x00	0x02	0xFF
57600[1]	0xFC	0x00	0x02	0x03
38400	0xFA	0x00	0x02	0x08
28800	0xF8	0x00	0x02	0x0E
19200	0xF4	0x00	0x03	0x19
14400	0xF0	0x00	0x04	0x23
9600	0xE8	0x00	0x05	0x39
4800	0xD0	0x00	0x09	0x7A
2400	0xA0	0x00	0x11	0xFC
1200	0x40	0x00	0x21	0x00[2]

1. 57600 is the default baud rate
2. 0x00 yields a stop bit of 421 µSec. The stop bit at 1200 baud should be 833 µSec.

6.4.1 OEM Host Data Rate

The OEM host data rate is the rate with which the OEM host and transceiver communicate over the serial interface. This rate is independent of the RF baud rate, which is fixed at 76.8 Kbps. Possible values range from 1200 bps to 115200 bps.

© Copyright 2022 Laird Connectivity
All Rights Reserved
Americas: +1-800-492-2320
Europe: +44-1628-858-940
Hong Kong: +852-2762-4823

7 Radio Interface

7.1 Protocol Status / Receive Acknowledgement

Note: Implemented in firmware v6.3 and later.

When enabled in EEPROM, GO0 and GO1 perform the functions of Protocol Status and Receive Acknowledgement.

7.1.1 Protocol Status

Every time the radio hops to hop bin 0, the radio asserts GO0 Low for the entire hop bin. GO0 goes low at the falling edge of the hop frame at the start of bin 0 and goes high with the rising edge of hop frame at the end of bin 0. During all other hops, GO0 is high.

Note: This mode is incompatible with Modem mode.

7.1.2 Receive Acknowledgement

The radio uses GO1 to signal that a valid RF acknowledgement has been received from the remote radio. GO1 is normally low and goes high within approximately 75 µSec of receiving a valid RF acknowledgement. It remains high until the end (rising edge) of the next hop.

Note: This mode is incompatible with Modem mode.

7.2 Flow Control

7.2.1 CTS On/CTS On Hysteresis (Flow Control)

Flow control refers to the control of data flow between transceivers. It is the method used to handle data in the transmit/receive buffer and determines how data flow between the transceivers is started and stopped. Often, one transceiver is capable of sending data at a higher rate than the other can receive it. Flow control allows the slower device to tell the faster device when to pause and resume data transmission.

When a transceiver has data to send, it sends a Ready To Send signal and waits for a Clear To Send response from the receiving unit. If the receiving radio is ready to accept data it will assert its CTS low. CTS will be reasserted when the buffer contains the number of bytes specified by CTS_OFF (EEPROM address 0x5D). These signals are sent apart from the data itself on separate wires.

Flow control refers to the control of data flow between transceivers. It is the method used to handle data in the transmit/receive buffer and determines how data flow between the transceivers is started and stopped. Often, one transceiver is capable of sending data faster than the other can receive it. Flow control allows the slower device to tell the faster device when to pause and resume data transmission.

If RTS Enable is enabled, the receiver will monitor RTS. If the OEM asserts its CTS (transceivers RTS) high, the transceiver will wait to send data over the serial bus to the OEM host until the RTS is asserted low. CTS should be monitored by the OEM host since this is the manner the transceiver signals the OEM Host that it's transmit buffer may be full. If it asserts CTS high, the OEM host should stop sending data over the serial bus. If CTS is asserted low, the OEM host can send data over the serial bus because the transmit buffer is not at its limit.

Tip: Can I implement a design using just TXD, RXD, and GND (three-wire Interface)?

Yes. However, it is strongly recommended that your hardware monitor the CTS pin of the radio. CTS is taken High by the radio when its interface buffer is getting full. Your hardware should stop sending at this point to avoid a buffer overrun (and subsequent loss of data).

© Copyright 2022 Laird Connectivity
All Rights Reserved
Americas: +1-800-492-2320
Europe: +44-1628-858-940
Hong Kong: +852-2762-4823

You can perform a successful design without monitoring CTS. However, you need to take into account the amount of latency the radio adds to the system, any additional latency caused by Transmit Retries or Broadcast Attempts, how often you send data, non-delivery network timeouts and interface data rate. Polled type networks, where the server host requests data from the client host and the client host responds, are good candidates for avoiding the use of CTS. This is because no single transceiver can monopolize the RF link. Asynchronous type networks, where any radio can send to another radio at any point in time, are much more difficult to implement without the use of CTS.

© Copyright 2022 Laird Connectivity
All Rights Reserved
Americas: +1-800-492-2320
Europe: +44-1628-858-940
Hong Kong: +852-2762-4823

8 SECURITY

The AC4490 product family utilizes a Frequency Hopping Spread Spectrum (FHSS) technology which provides the foundation for secure digital wireless communications. This section describes how spread spectrum technology works and explains how an OEM can enable specific security features available in the AC4490.

8.1.1 Spread Spectrum History

Spread Spectrum dates back to World War II when a German scientist was granted a patent on a simple frequency hopping continuous wave (CW) system. The allies also experimented with Spread Spectrum in World War II. These early research and development efforts tried to provide countermeasures for radar, navigation beacons, and communications. The U. S. military has used SS signals over satellites for at least 25 years.

8.1.2 How Spread Spectrum Works

SS radio communications has long been a favorite technology of the military because it resists jamming and is difficult to intercept. This very same technology is now being widely used in the commercial, industrial, and consumer markets.

The reason for this is because SS signals are distributed over a wide range of frequencies and then collected onto their original frequency at the receiver, making them so inconspicuous as to be transparent. Just as they are unlikely to be intercepted by a military opponent, they are also unlikely to interfere with other signals intended for business and consumer users – even signals transmitted on the same frequencies.

Spread signals are intentionally made to be a much wider band than the information they are carrying and they use special pseudo-noise codes to make them more noise-like. It is this characteristic that makes SS signals difficult to detect, intercept, and demodulate. SS signals are hard to detect on narrowband equipment because the signal's energy is spread over a much wider bandwidth. Further, SS signals are harder to jam (interfere with) than narrowband signals and have a much lower probability to be intercepted, which is why the military has used Spread Spectrum for so many years.

The spread of energy over a wide band makes SS signals less likely to interfere with narrowband communications. Narrowband communications, conversely, cause little to no interference to SS systems because the receiver effectively integrates the signal over a wide bandwidth to recover it.

Besides being hard to intercept and jam, spread spectrum signals are hard to exploit or imitate. Signal exploitation is the ability of a non-network member to listen to and use information from the network without being a valid network member or participant. Imitation is the act of falsely or maliciously introducing false traffic or messages into a network.

SS signals are also more secure than narrowband radio communications. Thus SS signals can have any degree of desired message privacy. Messages can also be encrypted to any level of desired secrecy. The very nature of SS allows military or intelligence levels of privacy and security with minimal complexity. While these characteristics may not be important to everyday business or consumer needs, they are important to understand.

8.1.3 Frequency Hopping Spread Spectrum

A FHSS radio does what its name implies: it “hops” from frequency to frequency over a wide band. The specific order in which frequencies are occupied is a function of a code sequence, and the rate of hopping from one frequency to another is a function of the information rate.

8.1.4 AC4490 Security Features

As mentioned at the beginning of this section, the AC4490 uses FHSS technology. In addition, Laird has implemented three levels of security in the AC4490. All three levels of security are associated with their own EEPROM parameter that can programmed for permanent operation or be changed during system operation in volatile memory. The first two levels of security must be configured to establish a network of transceivers and are defined as the Channel Number and System ID.

The Channel Number represents a specific hopping sequence and provides physical separation between collocated networks. Thus, all transceivers in a network must be programmed to the same channel number. There are a total of 48 channel numbers.

System ID is similar to a password character or network number and makes network eavesdropping more difficult. A receiving radio does not go in range of or communicate with another radio on a different system ID. There are a total of 256 system ID values.

© Copyright 2022 Laird Connectivity
All Rights Reserved
Americas: +1-800-492-2320
Europe: +44-1628-858-940
Hong Kong: +852-2762-4823

If FHSS technology, channel number, and system ID are not enough to secure your data, the AC4490 supports the Data Encryption Standard (DES), which is the third level of security. Encryption is the process of encoding an information bit stream to secure the data content. The algorithm described in this standard specifies both encrypting and decrypting operations which are based on a binary number called a key.

A key of 56 bits is used to encrypt and decrypt the data. The encryption algorithm specified in this standard is commonly known among those using the standard. The unique key chosen for use in a particular application makes the results of encrypting data using the algorithm unique. Selection of a different key causes the encrypted data that is produced for any given set of inputs to be different. The cryptographic security of the data depends on the security provided for the key used to encrypt and decrypt the data.

Data can be recovered from the encrypted data only by using exactly the same key used to encrypt it. Unauthorized recipients of the encrypted data who know the algorithm but do not have the correct key cannot derive the original data algorithmically. However, anyone who does have the key and the algorithm can easily decrypt the encrypted data and obtain the original data. A standard algorithm based on a secure key thus provides a basis for exchanging encrypted data by issuing the key used to encrypt it to those authorized to have the data.

© Copyright 2022 Laird Connectivity
All Rights Reserved
Americas: +1-800-492-2320
Europe: +44-1628-858-940
Hong Kong: +852-2762-4823

9 AC4490 Mechanical and Layout

9.1 Mechanical Drawings

Interface Connector	20 pin OEM Interface connector (Molex 87759-0030, mates with Samtec SMM-110-02-S-D
MMCX Jack	20 pin OEM Interface connector (Molex 87759-0030, mates with Samtec SMM-110-02-S-D

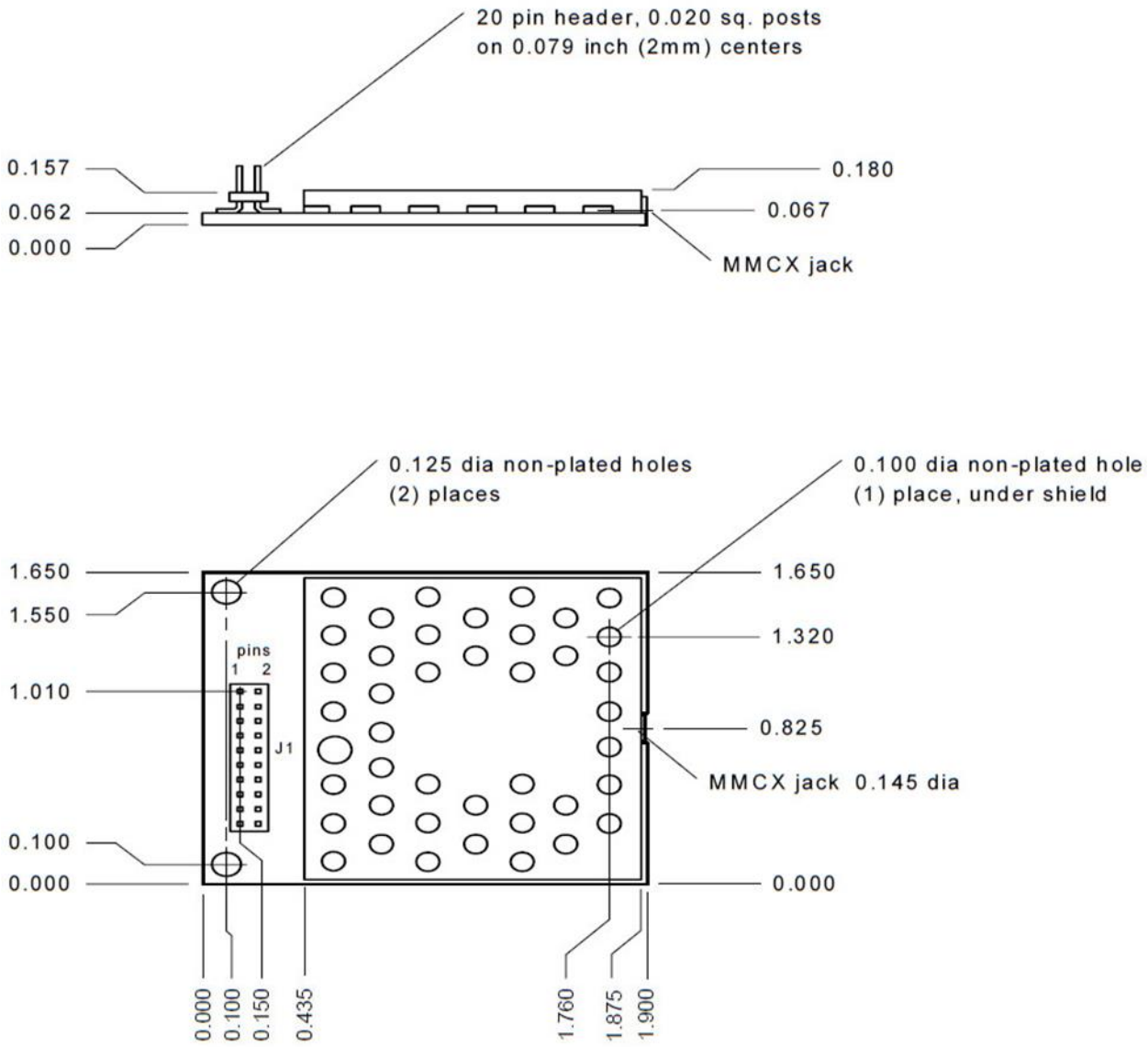

Figure 5: AC4490 (with MMCX connector) Mechanical

© Copyright 2022 Laird Connectivity
All Rights Reserved
Americas: +1-800-492-2320
Europe: +44-1628-858-940
Hong Kong: +852-2762-4823

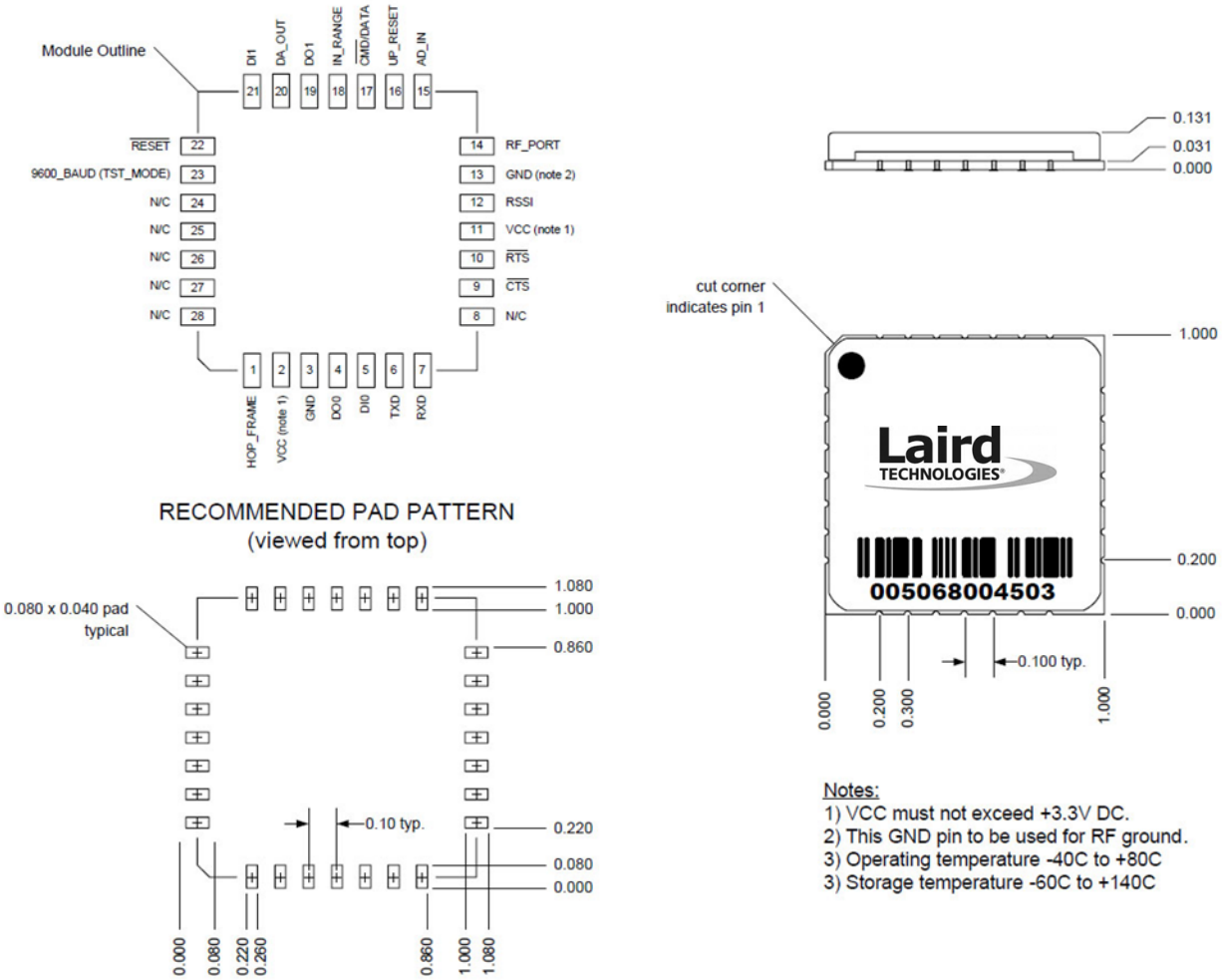

Figure 6: AC4490 - 1x1 Mechanical

© Copyright 2022 Laird Connectivity
All Rights Reserved
Americas: +1-800-492-2320
Europe: +44-1628-858-940
Hong Kong: +852-2762-4823

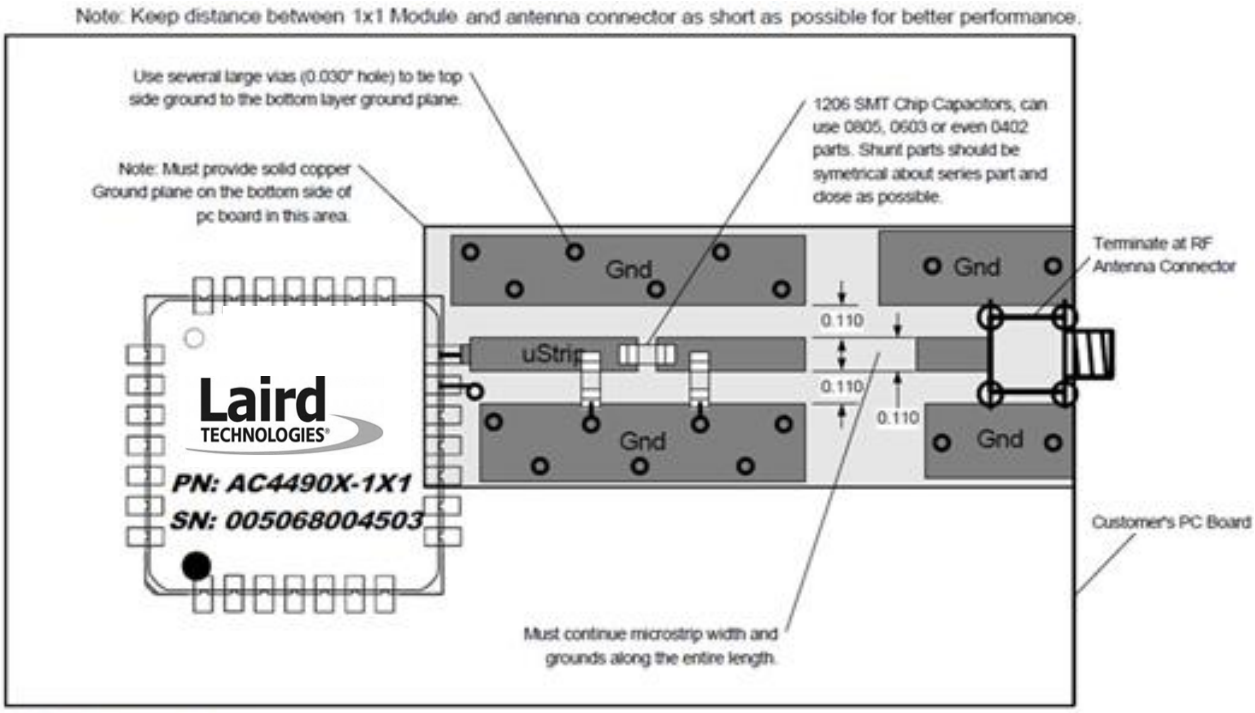

PCB THickness Notes:
For 0.062 thick PC board microstrip width and spacing is 0.110 inches.

For 0.031 thick PC board microstrip width and spacing is 0.055 inches.

Figure 7: AC4490 1x1 PCB Considerations

© Copyright 2022 Laird Connectivity
All Rights Reserved
Americas: +1-800-492-2320
Europe: +44-1628-858-940
Hong Kong: +852-2762-4823

10 AC4490 Timing Diagrams

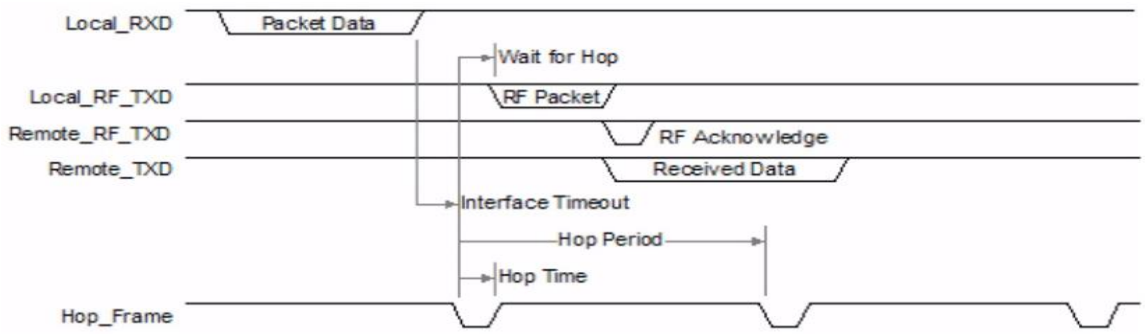

Figure 8: Addressed Mode with Timeout

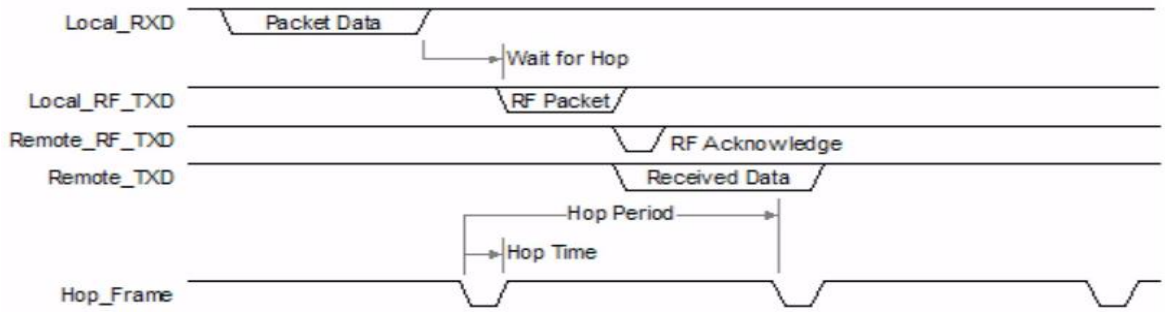

Figure 9: Addressed Mode with Fixed Packet Length

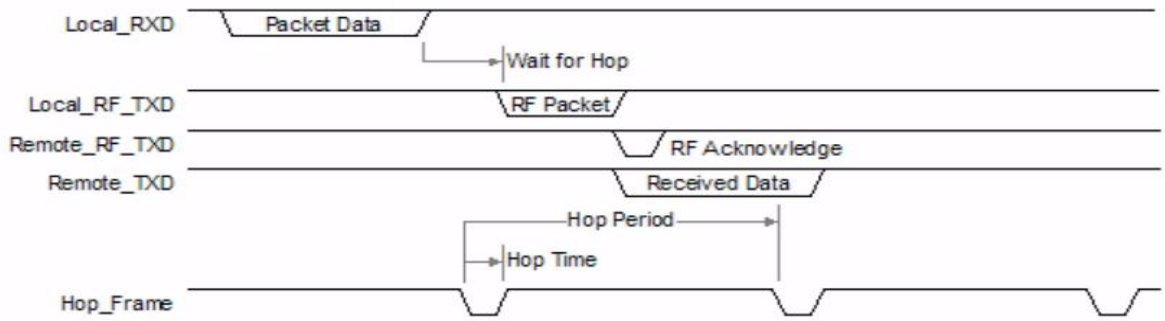

Figure 10: Broadcast Mode with Timeout

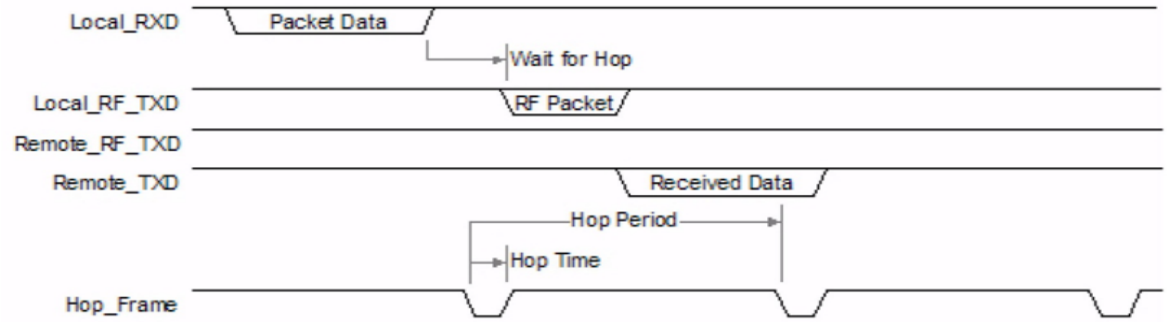

Figure 11: Broadcast Mode with Fixed Packet Length

© Copyright 2022 Laird Connectivity
All Rights Reserved
Americas: +1-800-492-2320
Europe: +44-1628-858-940
Hong Kong: +852-2762-4823

11 Ordering Information

Part	Type	Interface	Antenna Option	Output Power
AC4490-1000M	Module	3.3V TTL	MMCX Connector	1000 mW
AC4490-200M	Module	3.3V TTL	MMCX Connector	200 mW (US, Canada Only)
AC4490LR-1000M	Module	3.3V TTL	MMCX Connector	1000 mW (Long Range)
DVK-AC4490LR-1000M	Development Kit	3.3V TTL	MMCX Connector	1000 mW (Long Range)

11.1 Product Marketing Name

Model name	Product name
AC4490-1000M	902 - 928 MHz FHSS, 0 - 1 W, MMCX
AC4490LR-1000M	902 - 928 MHz FHSS, 0 - 1 W, MMCX, Long Range

11.2 Developer Kit Part Number

DVK-AC4490LR-1000M

Developer's kit includes (2) transceivers, (2) development boards, (2) 7.5 VDC unregulated power supplies, (2) serial cables, (2) USB cables, (2) antennas, downloadable configuration/testing software and integration engineering support.

12 Compliance Information

12.1 AC4490- 1x1

Due to the RF antenna trace residing on the OEM Host PCB, the FCC will not grant modular approval for the AC4490-1x1 and requires the OEM to submit their completed design for approval. Contact Laird for the approval procedure.

12.2 Agency Identification Numbers

Agency compliancy is a very important requirement for any product development. Laird has obtained modular approval for its products so the OEM only has to meet a few requirements to be eligible to use that approval. The corresponding agency identification numbers and approved antennas are listed below.

Table 7: Agency Identification Numbers

Part Number	US/FCC	Canada/IC
AC4490-200	KQL-4x90200	2268C-4x90200
AC4490-1000 AC4490LR-1000	KQL-AC4490	2268C-44901000

© Copyright 2022 Laird Connectivity
All Rights Reserved
Americas: +1-800-492-2320
Europe: +44-1628-858-940
Hong Kong: +852-2762-4823

12.3 Approved Antenna List

The following antennas are approved for use with the AC4490 as identified. The OEM may choose another vendor's antenna of like type and equal or lesser gain as a listed antenna and still maintain compliance.

Table 8: AC4490 Approved Antennas (for revision 1.0 hardware)

Laird Part #	Manufacturer Part #	Manufacturer	Type	Gain (dBi)	200M	1000M
0600-00019	S467FL-5-RMM-915S	Nearson	1/2 Wave Dipole	2	X	X
0600-00025	S467FL-5-RMM-915	Nearson	1/2 Wave Dipole	2	X	X
0600-00024	S467AH-915S	Nearson	1/2 Wave Dipole	2	X	X
0600-00027	S467AH-915R	Nearson	1/2 Wave Dipole	2	X	X
0600-00028	S161AH-915R	Nearson	1/2 Wave Dipole	2.5	X	X
0600-00029	S161AH-915	Nearson	1/2 Wave Dipole	2.5	X	X
0600-00030	S331AH-915	Nearson	1/4 Wave Dipole	1	X	X
-	1020B5812-04 Flavus	gigaAnt	Microstrip	-0.5	-	-
-	Y2283[1]	Comtelco	Yagi	6dBd	X	X
-	Y2283A0915-10RP	Comtelco	Yagi	6dBd	X	X
-	SG101N915[1]	Nearson	Omni	5	X	X
-	SG101NT-915	Nearson	Omni	5	X	X
-	GM113	V.Torch	Omni	3.5	X	-
-	PC8910NRTN	Cushcraft	Yagi	11dBd	-	-
-	ANT-DB1-RMS	Antenna Factor	Monopole	3	X	-

1. Strictly requires professional installation.

Table 9: AC4490 Approved Antennas (for revision 2.0 hardware for -1000M)

Laird Part #	Manufacturer Part #	Manufacturer	Type	Gain (dBi)	1000M
0600-00019	S467FL-5-RMM-915S	Nearson	1/2 Wave Dipole	2	X
0600-00025	S467FL-5-RMM-915	Nearson	1/2 Wave Dipole	2	X
	S467AH-915	Nearson	1/2 Wave Dipole	2	X
0600-00024	S467AH-915S	Nearson	1/2 Wave Dipole	2	X
0600-00028	S161AH-915R	Nearson	1/2 Wave Dipole	2.5	X
0600-00029	S161AH-915	Nearson	1/2 Wave Dipole	2.5	X

12.4 FCC Requirements for Modular Approval

Federal Communication Commission Interference Statement

This equipment has been tested and found to comply with the limits for a Class B digital device, pursuant to Part 15 of the FCC Rules. These limits are designed to provide reasonable protection against harmful interference in a residential installation. This equipment generates, uses and can radiate radio frequency energy and, if not installed and used in accordance with the instructions, may cause harmful interference to radio communications. However, there is no guarantee that interference will not occur in a particular installation. If this equipment does cause harmful interference to radio or television reception, which can be determined by turning the equipment off and on, the user is encouraged to try to correct the interference by one of the following measures:

© Copyright 2022 Laird Connectivity
All Rights Reserved
Americas: +1-800-492-2320
Europe: +44-1628-858-940
Hong Kong: +852-2762-4823

- Reorient or relocate the receiving antenna.
- Increase the separation between the equipment and receiver.
- Connect the equipment into an outlet on a circuit different from that to which the receiver is connected.
- Consult the dealer or an experienced radio/TV technician for help.

FCC Caution: Any changes or modifications not expressly approved by the party responsible for compliance could void the user's authority to operate this equipment.

This device complies with Part 15 of the FCC Rules. Operation is subject to the following two conditions: (1) This device may not cause harmful interference, and (2) this device must accept any interference received, including interference that may cause undesired operation.

IMPORTANT NOTE:

FCC Radiation Exposure Statement:

This equipment complies with FCC radiation exposure limits set forth for an uncontrolled environment. This equipment should be installed and operated with minimum distance 20cm between the radiator & your body.

This transmitter must not be co-located or operating in conjunction with any other antenna or transmitter.

Integration instructions for host product manufacturers

Applicable FCC rules to module

FCC Part 15.247

Summarize the specific operational use conditions

The module is must be installed in mobile device.

This device is intended only for OEM integrators under the following conditions:

1. The antenna must be installed such that 20 cm is maintained between the antenna and users, and
2. The transmitter module may not be co-located with any other transmitter or antenna

As long as 2 conditions above are met, further transmitter test will not be required. However, the OEM integrator is still responsible for testing their end-product for any additional compliance requirements required with this module installed.

IMPORTANT NOTE: In the event that these conditions can not be met (for example certain laptop configurations or co-location with another transmitter), then the FCC authorization is no longer considered valid and the FCC ID can not be used on the final product. In these circumstances, the OEM integrator will be responsible for re-evaluating the end product (including the transmitter) and obtaining a separate FCC authorization. The OEM integrator has to be aware not to provide information to the end user regarding how to install or remove this RF module in the user's manual of the end product which integrates this module.

The end user manual shall include all required regulatory information/warning as show in this manual.

Limited module procedures

Not applicable

Trace antenna designs

Not applicable

RF exposure considerations

20 cm separation distance and co-located issue shall be met as mentioned in "Summarize the specific operational use conditions".

Product manufacturer shall provide below text in end-product manual

"This equipment complies with FCC radiation exposure limits set forth for an uncontrolled environment. This equipment should be installed and operated with minimum distance 20cm between the radiator & your body."

Label and Compliance Information

Product manufacturers need to provide a physical or e-label stating

"Contains FCC ID: KQL-AC4490 / KQL-4x90200" with finished product

© Copyright 2022 Laird Connectivity
All Rights Reserved
Americas: +1-800-492-2320
Europe: +44-1628-858-940
Hong Kong: +852-2762-4823

Information on Test Modes and Additional Testing Requirements

Test tool: Laird Configuration and Test Utility Software (Range Test tab) shall be used to set the module to transmit continuously.

Additional Testing, Part 15 Subpart B Disclaimer

The module is only FCC authorized for the specific rule parts listed on the grant, and that the host product manufacturer is responsible for compliance to any other FCC rules that apply to the host not covered by the modular transmitter grant of certification. The final host product still requires Part 15 Subpart B compliance testing with the modular transmitter installed.

For certified antenna list, see Table 8 for all revision 1.0 hardware and Table 9 for revision 2.0 hardware (AC4490-1000M / AC4490LR-1000M).

12.5 ISED Requirements for Modular Approval

This device contains licence-exempt transmitter(s)/receiver(s) that comply with Innovation, Science and Economic Development Canada's licence-exempt RSS(s). Operation is subject to the following two conditions:

1. This device may not cause interference
2. This device must accept any interference, including interference that may cause undesired operation of the device

L'émetteur/récepteur exempt de licence contenu dans le présent appareil est conforme aux CNR d'Innovation, Sciences et Développement économique Canada applicables aux appareils radio exempts de licence. L'exploitation est autorisée aux deux conditions suivantes :

1. *L'appareil ne doit pas produire de brouillage;*
2. *L'appareil doit accepter tout brouillage radioélectrique subi, même si le brouillage est susceptible d'en compromettre le fonctionnement.*

Radiation Exposure Statement:

This equipment complies with Canada radiation exposure limits set forth for an uncontrolled environment. This equipment should be installed and operated with minimum distance 20cm between the radiator & your body.

Déclaration d'exposition aux radiations:

Cet équipement est conforme Canada limites d'exposition aux radiations dans un environnement non contrôlé. Cet équipement doit être installé et utilisé à distance minimum de 20cm entre le radiateur et votre corps.

This device is intended only for OEM integrators under the following conditions:

1. The transmitter module may not be co-located with any other transmitter or antenna.

As long as 1 condition above are met, further transmitter test will not be required. However, the OEM integrator is still responsible for testing their end-product for any additional compliance requirements required with this module installed.

Cet appareil est conçu uniquement pour les intégrateurs OEM dans les conditions suivantes:

1. *Le module émetteur peut ne pas être coïmplanté avec un autre émetteur ou antenne.*

Tant que les 1 condition ci-dessus sont remplies, des essais supplémentaires sur l'émetteur ne seront pas nécessaires. Toutefois, l'intégrateur OEM est toujours responsable des essais sur son produit final pour toutes exigences de conformité supplémentaires requis pour ce module installé.

IMPORTANT NOTE:

In the event that these conditions can not be met (for example certain laptop configurations or co-location with another transmitter), then the Canada authorization is no longer considered valid and the ISED ID can not be used on the final product. In these circumstances, the OEM integrator will be responsible for re-evaluating the end product (including the transmitter) and obtaining a separate Canada authorization.

NOTE IMPORTANTE:

Dans le cas où ces conditions ne peuvent être satisfaites (par exemple pour certaines configurations d'ordinateur portable ou de certaines co-localisation avec un autre émetteur), l'autorisation du Canada n'est plus considéré comme valide et l'ID IC ne peut pas être utilisé sur le produit final. Dans ces circonstances, l'intégrateur OEM sera chargé de réévaluer le produit final (y compris l'émetteur) et l'obtention d'une autorisation distincte au Canada.

© Copyright 2022 Laird Connectivity
All Rights Reserved
Americas: +1-800-492-2320
Europe: +44-1628-858-940
Hong Kong: +852-2762-4823

End Product Labeling

The final end product must be labeled in a visible area with the following: “Contains ISED: 2268C-44901000 / 2268C-4x90200”.

Plaque signalétique du produit final

Le produit final doit être étiqueté dans un endroit visible avec l'inscription suivante: "Contient des ISED: 2268C-44901000 / 2268C-4x90200".

Manual Information to the End User

The OEM integrator has to be aware not to provide information to the end user regarding how to install or remove this RF module in the user’s manual of the end product which integrates this module.

The end user manual shall include all required regulatory information/warning as show in this manual.

Manuel d'information à l'utilisateur final

L'intégrateur OEM doit être conscient de ne pas fournir des informations à l'utilisateur final quant à la façon d'installer ou de supprimer ce module RF dans le manuel de l'utilisateur du produit final qui intègre ce module.

Le manuel de l'utilisateur final doit inclure toutes les informations réglementaires requises et avertissements comme indiqué dans ce manuel.

(For transmitters equipped with detachable antennas)

This radio transmitter [ISED: 2268C-44901000 / 2268C-4x90200] has been approved by Innovation, Science and Economic Development Canada to operate with the antenna types listed below, with the maximum permissible gain indicated. Antenna types not included in this list that have a gain greater than the maximum gain indicated for any type listed are strictly prohibited for use with this device.

Le présent émetteur radio ISED: 2268C-44901000 / 2268C-4x90200] a été approuvé par Innovation, Sciences et Développement économique Canada pour fonctionner avec les types d'antenne énumérés ci dessous et ayant un gain admissible maximal. Les types d'antenne non inclus dans cette liste, et dont le gain est supérieur au gain maximal indiqué pour tout type figurant sur la liste, sont strictement interdits pour l'exploitation de l'émetteur.

For certified antenna list, see Table 8 for all revision 1.0 hardware and Table 9 for revision 2.0 hardware (AC4490-1000M / AC4490LR-1000M).

12.6 Antenna Requirements

WARNING for Hardware Revision 1.0: This device has been tested with an MMCX connector with the above listed antennas. When integrated into the OEM’s product, these fixed antennas require professional installation preventing end-users from replacing them with non-approved antennas. Antenna Y2283 and SG101N915 strictly require professional installation. Any antenna not in the previous table must be tested to comply with FCC Section 15.203 for unique antenna connectors and Section 15.247 for emissions. Contact Laird Connectivity for assistance.

Caution: Any change or modification not expressly approved by Laird Connectivity could void the user's authority to operate the equipment.

For certified antenna list, see Table 8 for all revision 1.0 hardware.

WARNING for Hardware Revision 2.0: This device has been tested with an MMCX connector with the above listed antennas. When integrated into the OEM’s product, these fixed antennas require professional installation preventing end-users from replacing them with non-approved antennas. Any antenna not in the previous table must be tested to comply with FCC Section 15.203 and Section 15.247 for emissions. Contact Laird Connectivity for assistance.

Caution: Any change or modification not expressly approved by Laird Connectivity could void the user's authority to operate the equipment.

For certified antenna list, see Table 9 for revision 2.0 hardware (AC4490-1000M / AC4490LR-1000M).

© Copyright 2022 Laird Connectivity
All Rights Reserved
Americas: +1-800-492-2320
Europe: +44-1628-858-940
Hong Kong: +852-2762-4823

12.7 Channel Warning

The OEM must prevent the end-user from selecting a channel not approved for use by the governing body in the country in which this product is implemented.

13 Revision 2.0 Hardware (AC4490-1000M, AC4490LR-1000M)

The Qorvo RF power amplifier (RF2173) used on old pre-revision 2.0 hardware is now EoL (End of Life) and the redesigned revision 2.0 hardware uses a new Qorvo RF power amplifier (RF6886).

Additionally, revision 2.0 hardware has the following changes to help ease sourcing issues:

- Changed RF filters (LPF ceramic and BPF SAW) but with similar specifications.
- 14.7456MHz crystal changed and body size reduction, but with similar specification.
- Passive component body size reduction
- and therefore, PCB layout changed.

Revision 2.0 hardware is form, fit, function equivalent to older pre-revision 2.0 hardware. See PCN 7B - 2022.

14 Appendix I: 5V to 3.3V Levels

All inputs on the AC4490-200 & AC4490-1000, AC4490LR-1000 are weakly pulled High via 10 kohm resistors. The AC4490-200 has 5 V inputs while the AC4490-1000, AC4490LR & AC4490-1x1 have 3.3 V inputs. The AC4490-200 uses an octal buffer to drop the 5 V to the required 3.3 V level; the -1000 and -1x1 leave this to the OEM.

Some of the most common voltage conversion methods are described below.

14.1 Voltage Level Conversion IC's

This is the easiest and most efficient method. Laird recommends the TI SN74LVC244A Octal Buffer/Driver. Inputs can be driven from either 3.3 V or 5 V systems, allowing the device to be used in a mixed 3.3/5 V system.

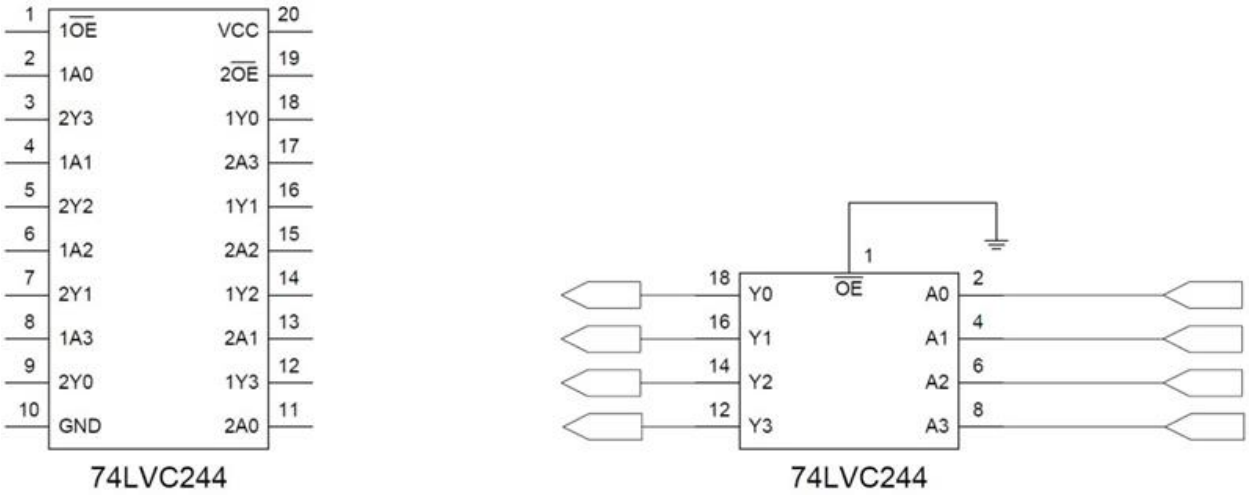

Figure 12: Voltage Level Conversion

14.2 Passive Resistor Voltage Divider

While a resistor voltage divider can successfully drop the 5 V to the required 3.3 V, it will draw static current at all times. Typically, this method is only suitable for one-way 5 V to 3.3 V conversion. When choosing the resistor values, one needs to include the radio's internal 10 kohm resistors on the input signals.

© Copyright 2022 Laird Connectivity
All Rights Reserved
Americas: +1-800-492-2320
Europe: +44-1628-858-940
Hong Kong: +852-2762-4823

15 Appendix II: Sample Power Supply

Below is a simple switching power supply that provides enough current to easily power any Laird OEM module. It utilizes low cost, off-the-shelf components that fit into a small area. This supply has an input voltage range of +6 volts to +18 volts and will output +3.4 volts at 1.5 amps.

Included is a Bill of Materials with manufacturer's name and part numbers, Schematic and a sample PCB Layout. It is important to follow the layout suggestions and use large areas of copper to connect the devices as shown in the layout. It is also important to hook up the ground traces as shown and use multiple vias to connect input and output capacitors to the bottom side ground plane.

If the input voltage is less than 12 volts, C1 and C2 can be replaced with a single 100µF 20 volt capacitor (same part number as C7). This will reduce board space and costs further. If you are powering an AC5124 module, R1 can be changed to a 373 ohm 1% resistor. This will change the output to +5 volts at 1.0 amps.

15.1 Bill of Materials

Table 10: Power Supply Bill of Materials

Qty	Reference	Value	Description	Mfg.	Mfg. Part number
1	R1	210	Res, 0603, 210, 1/16 W, 1%	KOA	RK73H1JT2100F
1	R2	127	Res, 0603, 127, 1/16 W, 1%	KOA	RK73H1JT1270F
2	C1 C2	47µF	Cap, Tant, 7343, 47 µF, 35 V	AVX	TPSE476M035R0200
3	C3 C4 C5	0.1µF	Cap, Cer, 0603, 0.1uF, Y5V, 25 V	Murata	GRM39Y5V104Z025AD
1	C6	3300pF	Cap, Cer, 0603, 3300 pF, X7R, 50 V	Murata	GRM39X7R332K050AD
1	C7	100µF	Cap, Tant, 7343, 100 µF, 20 V	Kemet	T491X107K020A5
1	D1	B230/A	Diode, SMB, B230/A, 2A, Schottkey	Diodes, Inc.	B230/A
1	D2	LL4148	Diode, MELF, LL4148, Switch Diode	Diodes, Inc.	LL4148
1	L1	15µH	Xfmr, 2P, SMT, 15uH, 2A	Coiltronics	UP2.8B150
1	U1	CS51413	IC, CS51413, 8P, SO, Switch Reg Ctrl.	On-Semicond.	CS51413

© Copyright 2022 Laird Connectivity
All Rights Reserved
Americas: +1-800-492-2320
Europe: +44-1628-858-940
Hong Kong: +852-2762-4823

15.2 Schematic

15.2.1 Switching Power Supply

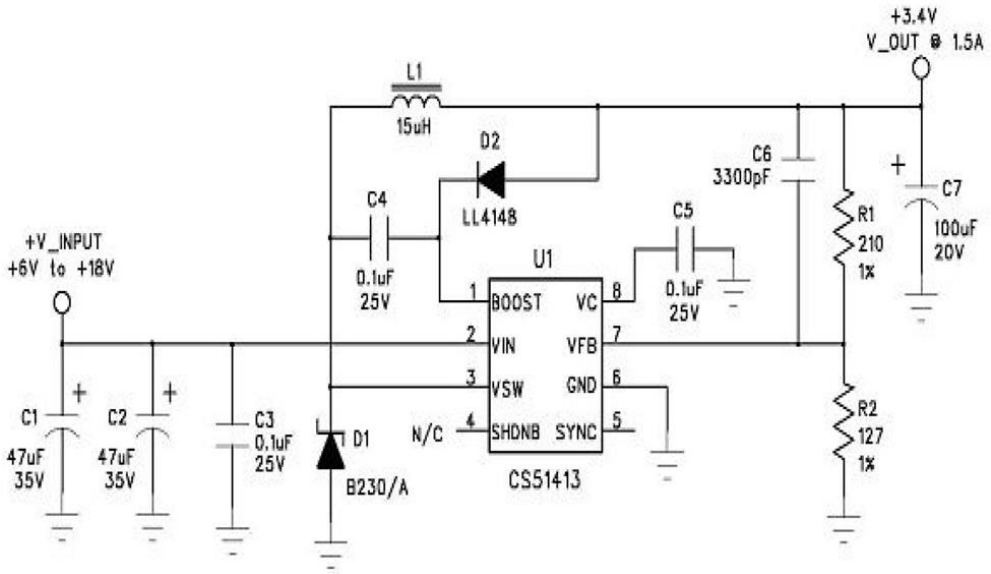

Figure 13: Power Supply Schematic

15.3 PCB Layout

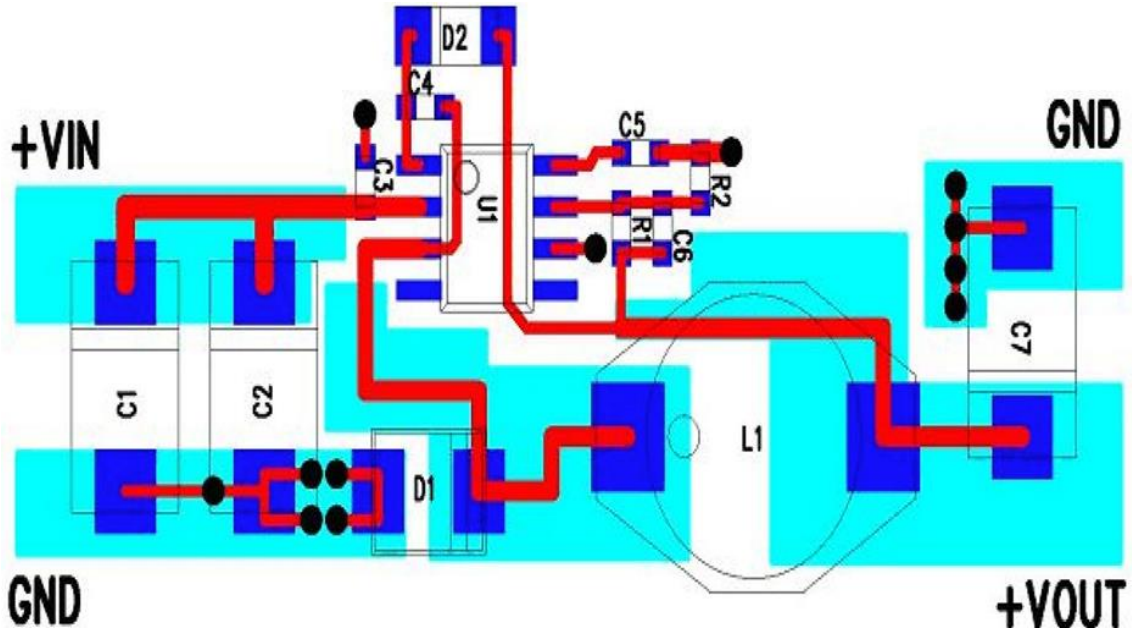

Figure 14: PCB Layout

© Copyright 2022 Laird Connectivity
All Rights Reserved
Americas: +1-800-492-2320
Europe: +44-1628-858-940
Hong Kong: +852-2762-4823

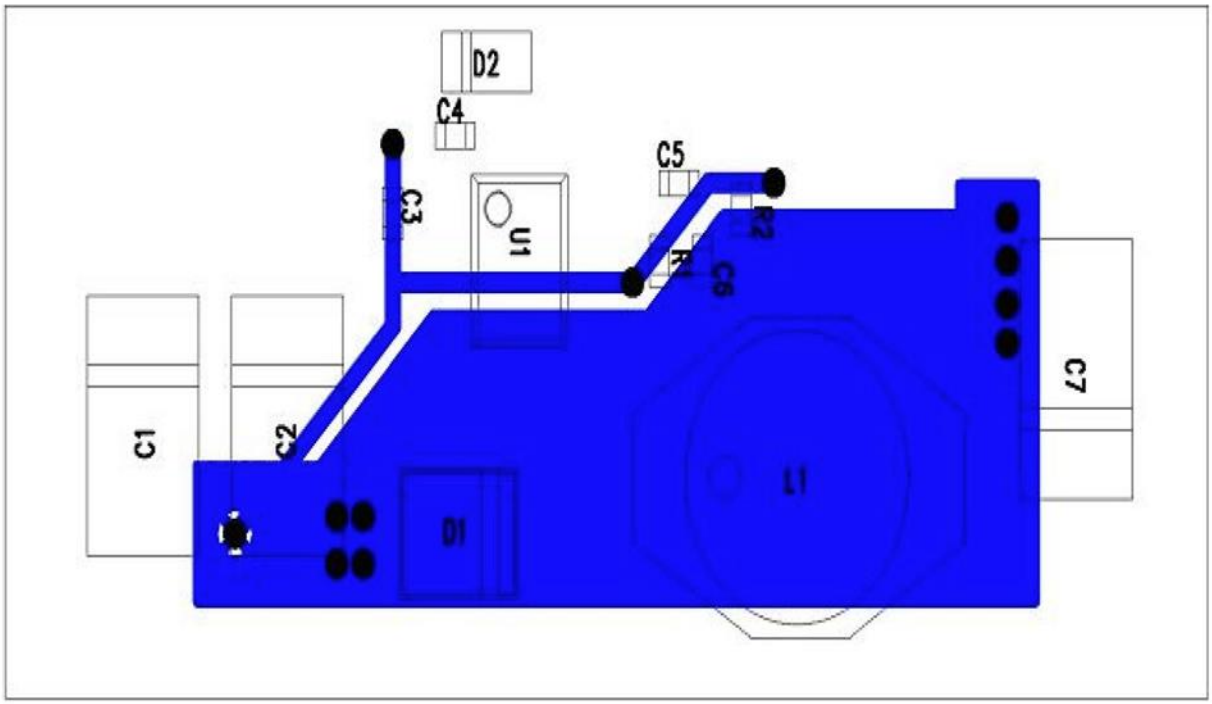

Figure 15: PCB Layout

© Copyright 2022 Laird Connectivity
All Rights Reserved
Americas: +1-800-492-2320
Europe: +44-1628-858-940
Hong Kong: +852-2762-4823

16 Appendix III: Product Throughput

Table 11: Product Matrix

Part Number	AC4490-1x1	AC4490-200	AC4490-1000
Size	1.0" x 1.0" x 0.125"	1.9" x 1.65" x 0.20"	1.9" x 1.65" x 0.20"
Range	Up to 1 mile	Up to 4 miles	Up to 20 miles
Throughput	32 Kbps	32 Kbps	32 Kbps
Current Draw RX	28 mA	30 mA	30 mA
Current Draw TX	80 mA	106 mA	1300 mA
Current Draw (Sleep Mode)	15 mA / 3 mA	19 mA / 6 mA	19 mA / 6 mA
Chan	48	48	32
Band	900 MHz	900 MHz	900 MHz
3.3V	Yes	Yes	Yes
Unit	Module	Module	Module
Approvals	None; needs OEM end approval	FCC / IC	FCC / IC
API	Yes	Yes	Yes
Integrated Antenna Available	No	Yes	No

© Copyright 2022 Laird Connectivity
All Rights Reserved
Americas: +1-800-492-2320
Europe: +44-1628-858-940
Hong Kong: +852-2762-4823

17 Related Documents and Files

The following additional AC4490 technical documents are available from the AC4490 product page: (Documentation and Datasheet tabs) located on the Laird website: https://www.lairdconnect.com/ac4490

- Product Brief
- AC4490 Datasheet
- Statement of Compliance to EU WEEE Directive and RoHS Directive

The following downloads are also available from the RAMP Product Information tab:

- Laird Configuration Utility
- USB Drivers
- AC4490 RF Diagnostic Suite

18 Additional Assistance

Please contact your local sales representative or our support team for further assistance:

Laird Connectivity
Support Center: https://www.lairdconnect.com/resources/support

Email: wireless.support@lairdconnectivity.com

Phone: Americas: +1-800-492-2320
Europe: +44-1628-858-940
Hong Kong: +852-2762-4823

Web: https://www.lairdconnect.com/products

Note: Information contained in this document is subject to change.

© Copyright 2022 Laird Connectivity. All Rights Reserved. Any information furnished by Laird and its agents is believed to be accurate and reliable. All specifications are subject to change without notice. Responsibility for the use and application of Laird materials or products rests with the end user since Laird and its agents cannot be aware of all potential uses. Laird makes no warranties as to non-infringement nor as to the fitness, merchantability, or sustainability of any Laird materials or products for any specific or general uses. Laird, Laird Technologies, Inc., or any of its affiliates or agents shall not be liable for incidental or consequential damages of any kind. All Laird products are sold pursuant to the Laird Terms and Conditions of Sale in effect from time to time, a copy of which will be furnished upon request. When used as a tradename herein, *Laird* means Laird PLC or one or more subsidiaries of Laird PLC. Laird™, Laird Technologies™, corresponding logos, and other marks are trademarks or registered trademarks of Laird. Other marks may be the property of third parties. Nothing herein provides a license under any Laird or any third party intellectual property right.