Datasheet

AC4790

Version 3.0

Revision History

Version	Date	Notes	Contributors	Approver
1.0		Initial Release		Chris Downey
1.1		Changes and Revisions		Chris Downey
2.0	19 Dec 2013	Separated Hardware Integration Guide (HIG) from User Guide information (created two separate documents). Add Related Documents section.		Chris Downey
2.1	21 Oct 2022	Updates for Revision 2.0 hardware (AC4790-1000M, AC4790LR-1000M) Added Approved Antenna List (for revision 2.0 of hardware). Added Revision 2.0 and Revision 3.0 Hardware section. Added Table 7: AC4790-1000M (revision 1.0, 2.0, and 3.0 hardware) RF power table Updated to latest template. Reviewed and updated regulatory sections 10.4, 10.5, 10.6.	Dave Drogowski Ryan Urness Raj Khatri	Jonathan Kaye
3.0	29 Mar 2024	Converted to Ezurio template. Updates for Revision 3.0 hardware (AC4490-1000M, AC4490LR-1000M): Added Revision 3.0 Hardware to Revision 2.0 and Revision 3.0 Hardware section Added Table 7: AC4790-1000M (revision 1.0, 2.0, and 3.0 hardware) RF power table	Dave Drogowski Raj Khatri	Dave Drogowski

© Copyright 2024 Ezurio
All Rights Reserved
Americas: +1-800-492-2320
Europe: +44-1628-858-940
Hong Kong: +852-2762-4823

Contents

1 AC4790 Transceiver 5
1.1 Overview 5
1.2 Features 5
2 Detailed Specifications 6
3 Electrical Specifications 8
4 Hardware 9
4.1 AC4790 Pinout 9
4.2 Detailed Pin Definitions 10
5 Serial Interface 11
5.1 Serial Communications 12
5.2 Asynchronous Operation 12
5.3 Parity 12
5.4 OEM Host Data Rate 13
5.5 Serial Interface Baud Rate 13
6 AC4790 Mechanical and Layout 13
6.1 Mechanical Drawings 13
7 OUTPUT POWER 18
8 Timing Diagrams 20
9 Ordering Information 22
9.1 Product Marketing Name 22
9.2 Developer Kit Part Numbers 22
10 Compliance Information 22
10.1 AC4790 – 1X1 22
10.2 Agency Identification Numbers 22
10.3 Approved Antenna List 23
10.4 FCC Requirements for Modular Approval 23
10.5 ISED Requirements for Modular Approval 24
10.6 Antenna Requirements 25
10.7 Channel Warning 26
11 Revision 2.0 and Revision 3.0 Hardware (AC4790-1000M, AC4790LR-1000M) 27
11.1 Revision 2.0 hardware 27
11.2 Revision 3.0 hardware 27
12 Appendix I: 5V to 3.3V Levels 27
12.1 Voltage Level Conversion IC's 27
12.2 Passive Resistor Voltage Divider 27
13 Appendix II: Sample Power Supply 27
13.1 Bill of Materials 28
13.2 Schematic 29
13.3 PCB Layout 29
14 Appendix III: Product Throughput 30
15 Related Documents and Files 31
16 Additional Information 32

© Copyright 2024 Ezurio
All Rights Reserved
Americas: +1-800-492-2320
Europe: +44-1628-858-940
Hong Kong: +852-2762-4823

© Copyright 2024 Ezurio
All Rights Reserved
Americas: +1-800-492-2320
Europe: +44-1628-858-940
Hong Kong: +852-2762-4823

1 AC4790 Transceiver

The compact AC4790 900MHz transceiver replaces miles of cable in harsh industrial environments. Using field-proven FHSS technology, which needs no additional FCC licensing in the Americas, OEMs can easily make existing systems wireless with little or no RF expertise.

1.1 Overview

The AC4790 is a member of our RAMP OEM transceiver family. The AC4790 is a cost effective, high performance, frequency hopping spread spectrum (FHSS) transceiver designed for integration into OEM systems operating under FCC part 15.247 regulations for the 900 MHz ISM band.

AC4790 transceivers operate in a masterless architecture. When an AC4790 has data to transmit, it enters transmit mode and starts transmitting a sync pulse intended for an individual radio or broadcasts to all transceivers within the same network and range. Intended receivers synchronize to this sync pulse, a session begins, and data is transmitted. This instinctive dynamic peer-to-peer networking architecture enables several transceiver pairs to carry on simultaneous conversations on the same network.

To boost data integrity and security, the AC4790 uses our FHSS technology featuring optional Data Encryption Standards (DES). Fully transparent, these transceivers operate seamlessly in serial cable replacement applications. Communications include both system and configuration data via an asynchronous TTL serial interface for OEM host communications. Configuration data is stored in an on-board EEPROM and most parameters can be changed on the fly. All frequency hopping, synchronization, and RF system data transmission/reception is performed by the transceiver, transparent to the OEM host.

This document contains information about the hardware interface between an AC4790 transceiver and an OEM host. Refer to the AC4790 User Guide for software and configuration information.

The OEM is responsible for ensuring the final product meets all appropriate regulatory agency requirements listed herein before selling any product.

Note: Unless mentioned specifically by name, the AC4790 modules are referred to as the *radio* or *transceiver*. Individual naming is used to differentiate product-specific features. The host (any device to which the AC4790 is connected, such as a PC) are referred to as *OEM host*.

1.2 Features

1.2.1 Networking and Security

- Masterless: True peer-to-peer, point-to-multipoint, point-to-point
- Retries and acknowledgements
- API commands to control packet routing and acknowledgement on a packet-by-packet basis
- FHSS for security and interference rejection
- Customizable RF Channel number and system ID
- Hardware Protocol Status monitoring
- Two generic input and output digital lines and integrated ADC functions

1.2.2 Easy to Use

- Continuous 76.8 kbps RF stream rate
- Software selectable interface baud rates from 1200 bps to 115.2 kbps
- Low cost, low power, and small size ideal for high volume, portable and battery powered
- applications
- All modules are qualified for Industrial temperatures (-40 °C to 80 °C)
- Advanced configuration available using AT commands

© Copyright 2024 Ezurio
All Rights Reserved
Americas: +1-800-492-2320
Europe: +44-1628-858-940
Hong Kong: +852-2762-4823

2 Detailed Specifications

Table 1: AC4790 Specification table

GENERAL	
20-Pin Interface Connector	Molex 87759-0030, mates with Samtec SMM-110-02-S-D
MMCX RF Connector	Johnson Components 135-3711-822
Antenna	AC4790-1x1: Customer must provide AC4790-200: MMCX Connector AC4790-1000: MMCX Connector AC4790LR-1000: MMCX Connector See Approved Antenna List
Serial Interface Data Rate	Baud rates from 1200 bps to 115200 bps
Power Consumption (typical)	Duty Cycle (TX = Transmit; Rx = Receive)

	10% TX	**50% TX**	**100% TX**	**100% RX**
AC4790-1x1:	33mA	54mA	80mA	28mA
AC4790-200:	38mA	68mA	106mA	30mA
AC4790-1000:	130mA	650mA	1300mA	30mA

Channels	AC4790-1x1/-200: 16 channels, US/Canada AC4790-1x1/-1000M: 32 channels, US/Canada AC4790-1x1/-200/-1000: 8 channels, Australia/US/Canada
Security	One byte System ID. 56-bit DES encryption key.
Interface Buffer Size	Input/Output: 256 bytes each

TRANSCEIVER		
Frequency Band	902 – 928 MHz	US/Canada
	915 – 928 MHz	Australia, US/Canada (optional)
RF Rate	76.8 kbps fixed	
RF User Data Rate	~25 kbps average	
RF Technology	Frequency Hopping Spread Spectrum (FHSS)	
Output Power		

	Conducted (no antenna)	**EIRP (3dBi gain antenna)**
AC4790-1x1:	10 mW typical	20 mW typical
AC4790-200:	100 mW typical	200 mW typical
AC4790-1000:	743 mW typical	1486 mW typical

Supply Voltage	AC4790-1x1:	3.3V, ±50 mV ripple
	AC4790-200:	3.3 – 5.5V, ±50 mV ripple
	AC4790-1000M/ AC4790LR-1000M*:	Pin 10: 3.3 – 5.5V ±50 mV ripple Pin 11: 3.3 ±3%, ±100 mV ripple
	* Pins 10 and 11 may be tied together, provided the supply voltage never falls below 3.3V, is capable of supplying 1.5A of current, and has a +/-50mV ripple spec.	
Sensitivity	-100 dBm typical @ 76.8 kbps RF Data Rate -110 dBm typical @ 76.8 kbps RF Data Rate (AC4790LR-200/AC470LR-1000)	

© Copyright 2024 Ezurio
All Rights Reserved
Americas: +1-800-492-2320
Europe: +44-1628-858-940
Hong Kong: +852-2762-4823

EEPROM write cycles	20000
Initial Transceiver Sync time/Hop period	25 ms/50 ms
Range, Line of Sight (based on 3 dBi gain antenna)	AC4790-1x1: Up to 1 mile AC4790-200: Up to 4 miles AC4790LR-200: Up to 8 miles AC4790-1000: Up to 20 miles AC4790LR-1000: Up to 40 miles

ENVIRONMENTAL	
Temperature (Operational)	-40°C to 80°C
Temperature (Storage)	-50°C to 85°C
Humidity (non-condensing)	10% to 90%
PHYSICAL	
Dimensions	Transceiver with MMCX Connector: 1.65” x 1.9” x 0.20” AC4790-1x1: 1.00” x 1.00” x 0.162”

CERTIFICATIONS		
	AC4490-200	AC4790-1000M/AC479LR-1000M
FCC Part 15.247	KQL-4x90200	KQL-AC4490
Industry Canada (IC)	2268C-4x90200	2268C-44901000

Caution! ESD Sensitive Component. Proper ESD precautions should be used when handling this device to prevent permanent damage.

External ESD protection is required to protect this device from damage as required to pass IEC 61000-4-2 or ISO 10605 based on end system application.

© Copyright 2024 Ezurio
All Rights Reserved
Americas: +1-800-492-2320
Europe: +44-1628-858-940
Hong Kong: +852-2762-4823

3 Electrical Specifications

Table 2: Input Voltage Characteristics

Signal Name	AC47901x1 / AC4790-1000M				AC4790-200X				Unit
	High Min.	High Max.	Low Min.	Low Max.	High Min.	High Max.	Low Min.	Low Max.	
RS485A/B	N/A	12	-7	N/A	N/A	12	-7	N/A	V
RXD	2.31	3.3	0	0.99	2	5.5	0	0.8	V
GI0	2.31	3.3	0	0.99	2	5.5	0	0.8	V
RTS	2.31	3.3	0	0.99	2	5.5	0	0.8	V
Test	2.31	3.3	0	0.99	2	5.5	0	0.8	V
GI1	2.31	3.3	0	0.99	2	5.5	0	0.8	V
UP_RESET	0.8	3.3	0	0.6	0.8	5	0	0.8	V
Command/Data	2.31	3.3	0	0.99	2	5.5	0	0.8	V
AD In	N/A	3.3	0	N/A	N/A	3.3	0	N/A	V

Table 3: Output Voltage Characteristics

Signal Name	Module Pin	1x1 Pin	Type	High Min.	Low Max.	Unit
Go0	1	19	O	2.5 @ 8 mA	0.4 @ 8 mA	V
TXD	2	6	O	2.5 @ 2 mA	0.4 @ 2 mA	V
RS485A/B	2, 3	N/A	I/O	3.3 @ 1/8 Unit Load	N/A	V
CTS	7	9	O	2.5 @ 2 mA	0.4 @ 2 mA	V
GO1	9	19	O	2.5 @ 2 mA	0.4 @ 2 mA	V
RSSI	13	12	O	See RSSI	See RSSI	V
Session Status	20	18	O	2.5 @ 2 mA	0.4 @ 2 mA	V
GO0	1	19	O	2.5 @ 8 mA	0.4 @ 8 mA	V

© Copyright 2024 Ezurio
All Rights Reserved
Americas: +1-800-492-2320
Europe: +44-1628-858-940
Hong Kong: +852-2762-4823

4 Hardware

4.1 AC4790 Pinout

The AC4790 has a simple interface that allows OEM host communications with the transceiver. Table 4 shows the connector pin numbers and associated functions. The I/O direction is with respect to the transceiver. All outputs are 3.3 VDC levels and inputs are 5 VDC TTL (with the exception of AC4790-1x1 and AC4790-1000 transceivers, which have 3.3 V inputs). All inputs are weakly pulled High and may be left floating during normal operation (with the exceptions listed for the AC4790-1x1).

Table 4: AC4790 Pinout

Pin #	1x1 Pin	Type	Signal Name	Function
1	4	O	GO0	Session status if Protocol Status is enabled. Otherwise, generic output.
2	6	O	TXD	Transmitted data out of the transceiver
		I/O	RS485A (True)[1]	Non-inverted RS485 representation of serial data
3	7	I	RXD	Data input to the transceiver
		I/O	RS485B(Invert)[1]	Mirror image of RS485A
4	5[2]		GI0	Generic Input pin
5	3	GND	GND	Signal Ground
6		O	Do Not Connect	Has internal connection, for **Ezurio use only.**
7	9	O	CTS	Clear-to-Send – Active Low when the transceiver is ready to accept data for transmission.
8	10[2]	I	RTS	Request-to-Send – When enabled in EEPROM, the OEM host can take this High when it is not ready to accept data from the transceiver. **Note:** Keeping RTS High for too long can cause data loss.
9	19	O	GO1	Received Acknowledge status pin if Protocol Status is enabled. Otherwise, generic output.
10	2	PWR	VCC1	AC4790-1x1: 3.3V, ±50mV ripple AC4790-200: 3.3 – 5.5V, ±50mV ripple **(Pin 10 is internally connected to Pin 11)** AC4790-1000: 3.3 – 5.5V, ±50mV ripple
11	11	PWR	VCC2	AC4790-1x1: 3.3V, ±50mV ripple AC4790-200: 3.3 – 5.5V, ±50mV ripple **(Pin 11 is internally connected to Pin 10)** AC4790-1000: 3.3V ±3%, ±100mV ripple
12	23	I	Test	Test Mode – When pulled logic Low and then applying power or resetting, the transceiver's serial interface is forced to a 9600, 8-N-1 rate. To exit, the transceiver must be reset or power-cycled with Test Mode logic High.
13	12	O	RSSI	Received Signal Strength - An analog output giving an instantaneous indication of received signal strength. Only valid while in Receive Mode.
14	21[2]	I	GI1	Generic Input pin
15	16	I	UP_RESET	RESET – Controlled by the AC4790 for power-on reset if left unconnected. After a stable power-on reset, a logic High pulse will reset the transceiver.
16	13	GND	GND	Signal Ground
17	17	I	CMD/Data	When logic Low, the transceiver interprets OEM host data as command data. When logic High, the transceiver interprets OEM host data as transmit data.
18	15[3]	I	AD In	10 bit Analog Data Input
19	1,8,20	N/C	Do Not Connect	Has internal connection, for **Ezurio use only**.

© Copyright 2024 Ezurio
All Rights Reserved
Americas: +1-800-492-2320
Europe: +44-1628-858-940
Hong Kong: +852-2762-4823

Pin #	1x1 Pin	Type	Signal Name	Function
	24-28			
20	18	O	Session Status	When logic Low, the transceiver is in session
N/A	14	RF	RF Port	RF Interface
N/A	22	I	Reset	Active Low version of UP_RESET. If RESET is used, UP_RESET should be left floating and if UP_RESET is used, RESET should be left floating.

1. When ordered with a RS485 interface (not available on the AC4790-1x1).
2. Must be tied to VCC or GND if not used. Should never be permitted to float.
3. If used, requires a shunt 0.1µF capacitor at pin 15 followed by a series 1k resistor.

4.2 Detailed Pin Definitions

4.2.1 Generic I/O

Both GI0 and GI1 pins serve as generic input pins. When Protocol Status (byte 0xC2 of EEPROM) is disabled, GO0 & GO1 serve as generic outputs. When Protocol Status is enabled, pins GO0 and GO1 alternatively serve as the Session Status and Receive Acknowledge Status pins, respectively. Reading and writing of these pins can be performed using CC Commands.

4.2.1.1 Hardware Protocol Status

When the GO0 pin is configured as the Session Status pin, GO0 is normally Low. GO0 will go High when a session is initiated and remain High until the end of the session. When the GO1 pin is configured as the Receive Acknowledge Status pin, GO1 is normally Low and GO1 will go High upon receiving a valid RF Acknowledgement and will remain High until the end (rising edge) of the next hop.

4.2.2 TXD & RXD

Serial TTL	The AC4790-200 accepts 3.3 or 5VDC TTL level asynchronous serial data on the RXD pin and interprets that data as either Command Data or Transmit Data. Data is sent from the transceiver, at 3.3V levels, to the OEM host via the TXD pin. **Note:** The AC4790-1000 & AC4790-1x1 transceivers **only** accept 3.3V level signals.
RS485	When equipped with an onboard RS485 interface chip, TXD and RXD become the Half Duplex RS485 pins. The transceiver interface will be in Receive mode except when it has data to send to the OEM host. TXD is the non-inverted representation of the data (RS485A) and RXD is a mirror image of TXD (RS485B). The transceiver will still use RTS (if enabled).

4.2.3 $\overline{\text{CTS}}$

The AC4790 has an interface buffer size of 256 bytes. If the buffer fills up and more bytes are sent to the transceiver before the buffer can be emptied, data is lost. The transceiver prevents this loss by asserting CTS High as the buffer fills up and taking CTS Low as the buffer is emptied. CTS On and CTS Off control the operation of CTS. CTS On specifies the amount of bytes that must be in the buffer for CTS to be disabled (logic High). Even while CTS is disabled, the OEM host can send data to the transceiver, but it should do so carefully.

Note: The CTS On/Off bytes of the EEPROM can be set to 1, in which case CTS will go High as data is sent in and Low when buffer is empty.

4.2.4 RTS

With RTS disabled, the transceiver will send any received data to the OEM host as soon as it is received. However, some OEM hosts are not able to accept data from the transceiver all of the time. With RTS enabled, the OEM host can prevent the transceiver from sending it data by disabling RTS (logic High). Once RTS is enabled (logic Low), the transceiver can send packets to the OEM host as they are received.

Note: Leaving RTS disabled for too long can cause data loss once the transceiver's 256 byte receive buffer fills up.

© Copyright 2024 Ezurio
All Rights Reserved
Americas: +1-800-492-2320
Europe: +44-1628-858-940
Hong Kong: +852-2762-4823

4.2.5 $\overline{\text{Test}}$ / 9600 Baud

When pulled logic Low before applying power or resetting, the transceiver's serial interface is forced to a 9600, 8-N-1 (8 data bits, No parity, 1 stop bit). To exit, the transceiver must be reset or power-cycled with Test pin logic High. This pin is used to recover transceivers from unknown baud rates only. It should not be used in normal operation. Instead the transceiver Interface Baud Rate should be programmed to 9600 baud if that rate is desired for normal operation. The Test/9600 pin should be used for recovery purposes only as some functionality is disabled in this mode.

4.2.6 RSSI

Instantaneous RSSI	Received Signal Strength Indicator is used by the OEM host as an indication of instantaneous signal strength at the receiver. The OEM host must calibrate RSSI without an RF signal being presented to the receiver. Calibration is accomplished by following these steps: 1. Power up only one transceiver in the coverage area. 2. Measure the RSSI signal to obtain the minimum value with no other signal present. 3. Power up another transceiver and begin sending data from that transceiver to the transceiver being measured. 4. Separate the transceivers by approximately ten feet. 5. Measure the peak RSSI, while the transceiver is in session, to obtain a maximum value at full signal strength.
Validated RSSI	As RSSI is only valid when the local transceiver is receiving an RF packet from a remote transceiver, instantaneous RSSI can be very tricky to use. Therefore, the transceiver stores the most recent valid RSSI value. The OEM host issues the Report Last Good RSSI command to request that value. Additionally, validated RSSI can be obtained from Receive Packet and Send Data Complete API commands and from the Probe command. Validated RSSI is not available at the RSSI pin. The following equation approximates the RSSI curve, which is illustrated in Figure 1. **Signal Strength (dBm) = (-46.9 × VRSSI) – 53.9** 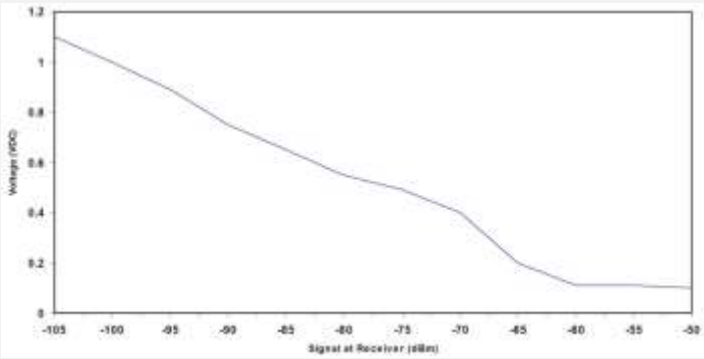 ***Figure 1: RSSI Voltage vs. Received Signal Strength***

4.2.7 UP_Reset

UP_Reset provides a direct connection to the reset pin on the AC4790 microprocessor and is used to force a soft reset. For a valid reset, reset must be asserted High for a minimum of 10 ms.

4.2.8 $\overline{\text{CMD}}$ /Data

When logic High, the transceiver interprets incoming OEM host data as transmit data to be sent to other transceivers and their OEM hosts. When logic Low, the transceiver interprets OEM host data as command data.

4.2.9 AD In

AD In can be used as a cost savings to replace Analog-to-Digital converter hardware. Reading of this pin can be performed locally using the Read ADC command found in the On-the-Fly Control Command Reference.

4.2.10 Session Status

Session Status reports logic Low during a session and logic High when not in session. The inverse of this pin can be obtained from pin GO0 when Protocol Status is enabled.

5 Serial Interface

In order for the OEM host and a transceiver to communicate over the serial interface they must be set to the same serial data rate. Refer to the following sections to ensure that the OEM host data rate matches the serial interface baud rate.

© Copyright 2024 Ezurio
All Rights Reserved
Americas: +1-800-492-2320
Europe: +44-1628-858-940
Hong Kong: +852-2762-4823

5.1 Serial Communications

The AC4790 is a TTL device which can be interfaced to a compatible UART (microcontroller) or level translator to allow connection to serial devices. UART stands for Universal Asynchronous Receiver Transmitter and its main function is to transmit or receive serial data.

5.2 Asynchronous Operation

Since there is no separate clock in asynchronous operation, the receiver needs a method of synchronizing with the transmitter. This is achieved by having a fixed baud rate and by using START and STOP bits. A typical asynchronous mode signal is shown in Figure 2: Asynchronous Mode Signal.

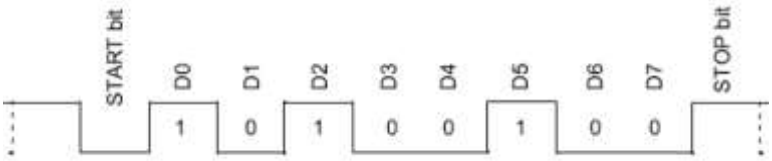

Figure 2: Asynchronous Mode Signal

The UART outputs and inputs logic-level signals on the Tx and Rx pins. The signal is High when no data is being transmitted and goes Low when transmission begins.

The signal stays Low for the duration of the START bit and is followed by the data bits, LSB first. The STOP bit follows the last data bit and is always High. After the STOP bit has completed, the START bit of the next transmission can occur.

5.3 Parity

A parity bit is used to provide error checking for a single bit error. When a single bit is used, parity can be either even or odd. Even parity means that the number of ones (1) in the data and parity add up to an even number and vice-versa. The ninth data bit can be used as a parity bit if the data format requires eight data bits and a parity bit as shown in Figure 3. See Table 5 for supported serial data formats.

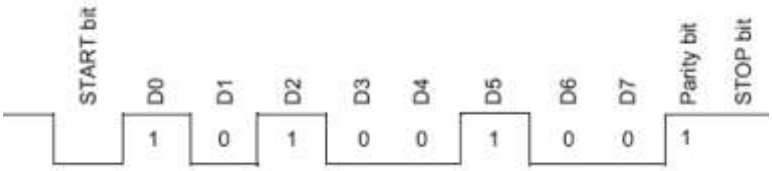

Figure 3: Even Parity Bit

Note: Enabling parity cuts throughput and the interface buffer in half.

© Copyright 2024 Ezurio
All Rights Reserved
Americas: +1-800-492-2320
Europe: +44-1628-858-940
Hong Kong: +852-2762-4823

5.4 OEM Host Data Rate

The OEM Host Data Rate is the rate with which the OEM host and transceiver communicate over the serial interface. This rate is independent of the RF rate, which is fixed at 76.8 kbps. Possible values range from 1200 bps to 115200 bps.

Note: Enabling Parity cuts throughput in half and the Interface Buffer size in half.

Table 5 lists supported asynchronous serial data formats.

Table 5: Supported Serial Formats

Data Bits	Parity	Stop Bits	Transceiver Programming Requirements
8	N	1	Parity Disabled
7	N	2	Parity Disabled
7	E, O, M, S	1	Parity Disabled
9	N	1	Parity Enabled
8	N	2	Parity Enabled
8	E, O, M, S	1	Parity Enabled
7	E, O, M, S	2	Parity Enabled
Mark (M) corresponds to 1 & Space (S) corresponds to 0			

5.5 Serial Interface Baud Rate

This two-byte value determines the baud rate used for communicating over the serial interface to a transceiver. Table 6 lists values for some common baud rates. Baud rates below 1200 baud are not supported. For a baud rate to be valid, the calculated baud rate must be within ±3% of the OEM host baud rate. If the Test pin (Pin 12) is pulled logic Low at reset, the baud rate will be forced to 9600. The RF rate is fixed at 76.8kbps and is independent of the interface baud rate. For baud rate values other than those shown in Table 6, the following equations can be used:

$$\text{BAUD} = \frac{14.7456 \times 10^6}{64 \times Desired\ Baud}$$

$$BaudH = Always\ 0$$

$$BaudL = Low\ 8\ bits\ of\ BAUD\ (base\ 16)$$

Table 6: Baud Rate / Interface Timeout

Baud Rate	BaudL (0x42)	BaudH (0x43)	Minimum Interface Timeout (0x58)	Stop Bit Delay (0x3F)
115200	0xFE	0x00	0x02	0xFF
57600[1]	0xFC	0x00	0x02	0x03
38400	0xFA	0x00	0x02	0x08
28800	0xF8	0x00	0x02	0x0E
19200	0xF4	0x00	0x03	0x19
14400	0xF0	0x00	0x04	0x23
9600	0xE8	0x00	0x05	0x39
4800	0xD0	0x00	0x09	0x7A
2400	0xA0	0x21	0x11	0xFC
1200	0x40	0x21	0x21	0x00[2]

1. 57600 is the default baud rate
2. 0x00 will yield a stop bit of 421µS. The stop bit at 1200 baud should actually be 833µS.

6 AC4790 Mechanical and Layout

6.1 Mechanical Drawings

Interface Connector	20 pin OEM Interface connector (Molex 87759-0030, mates with Samtec SMM-110-02-S-D

© Copyright 2024 Ezurio
All Rights Reserved
Americas: +1-800-492-2320
Europe: +44-1628-858-940
Hong Kong: +852-2762-4823

MMCX Jack	Antenna Connector (Johnson Components 135-3711-822) AC4790 (with MMCX connector) Mechanical

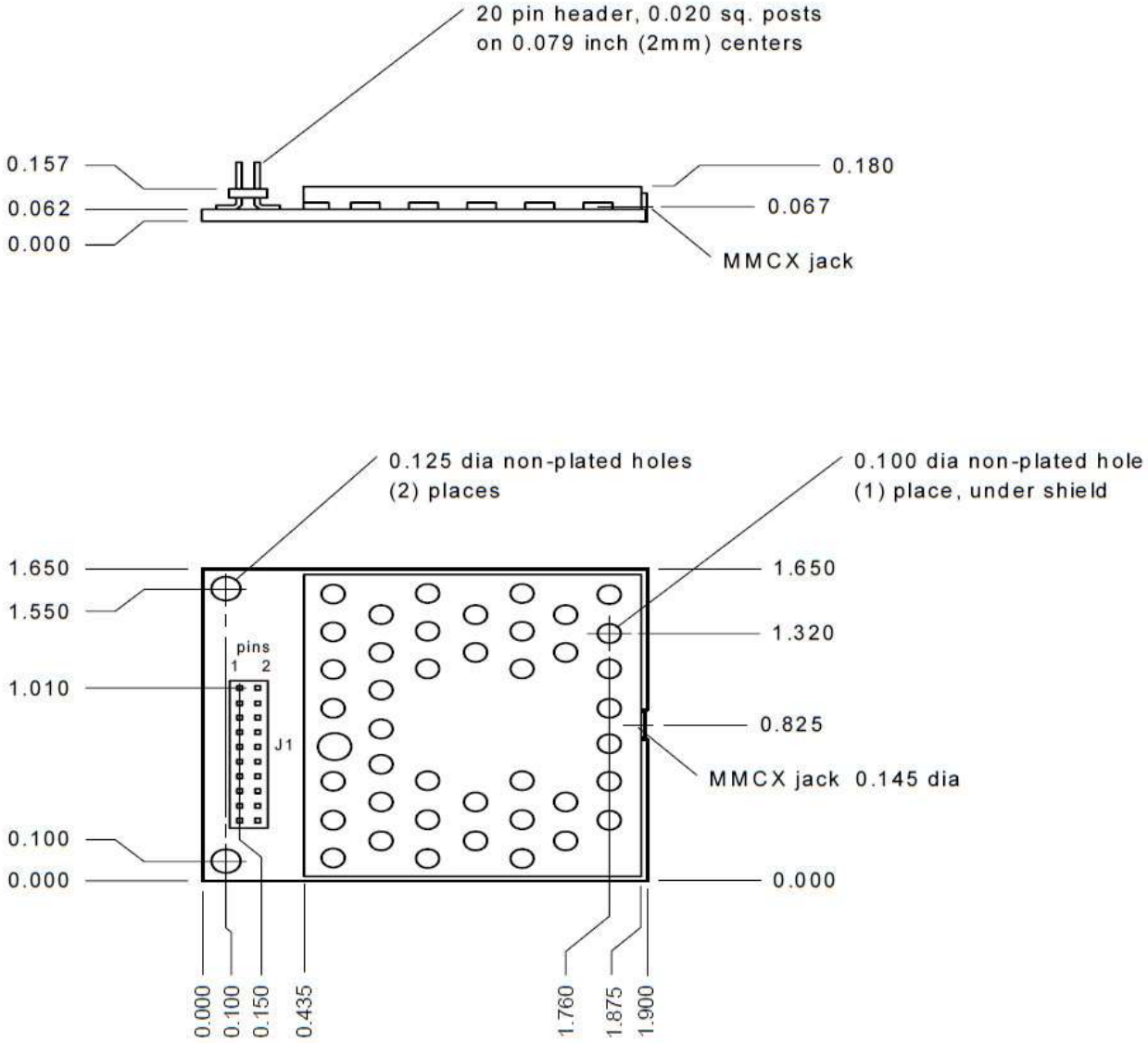

Figure 4: AC4790 (with MMCX connector) Mechanical

© Copyright 2024 Ezurio
All Rights Reserved
Americas: +1-800-492-2320
Europe: +44-1628-858-940
Hong Kong: +852-2762-4823

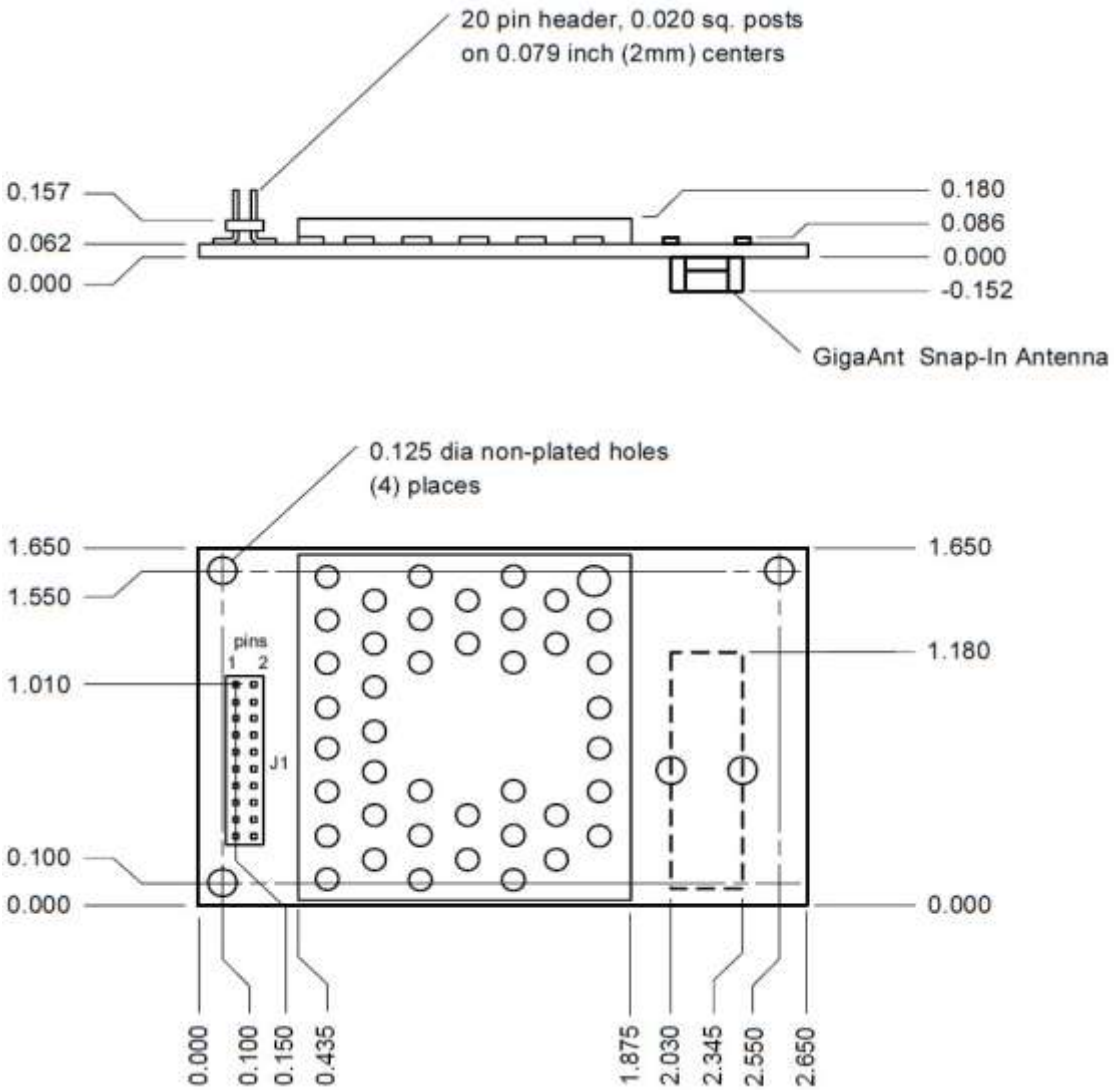

Figure 5: AC4790 with integral gigaAnt Antenna (on bottom) Mechanical

© Copyright 2024 Ezurio
All Rights Reserved
Americas: +1-800-492-2320
Europe: +44-1628-858-940
Hong Kong: +852-2762-4823

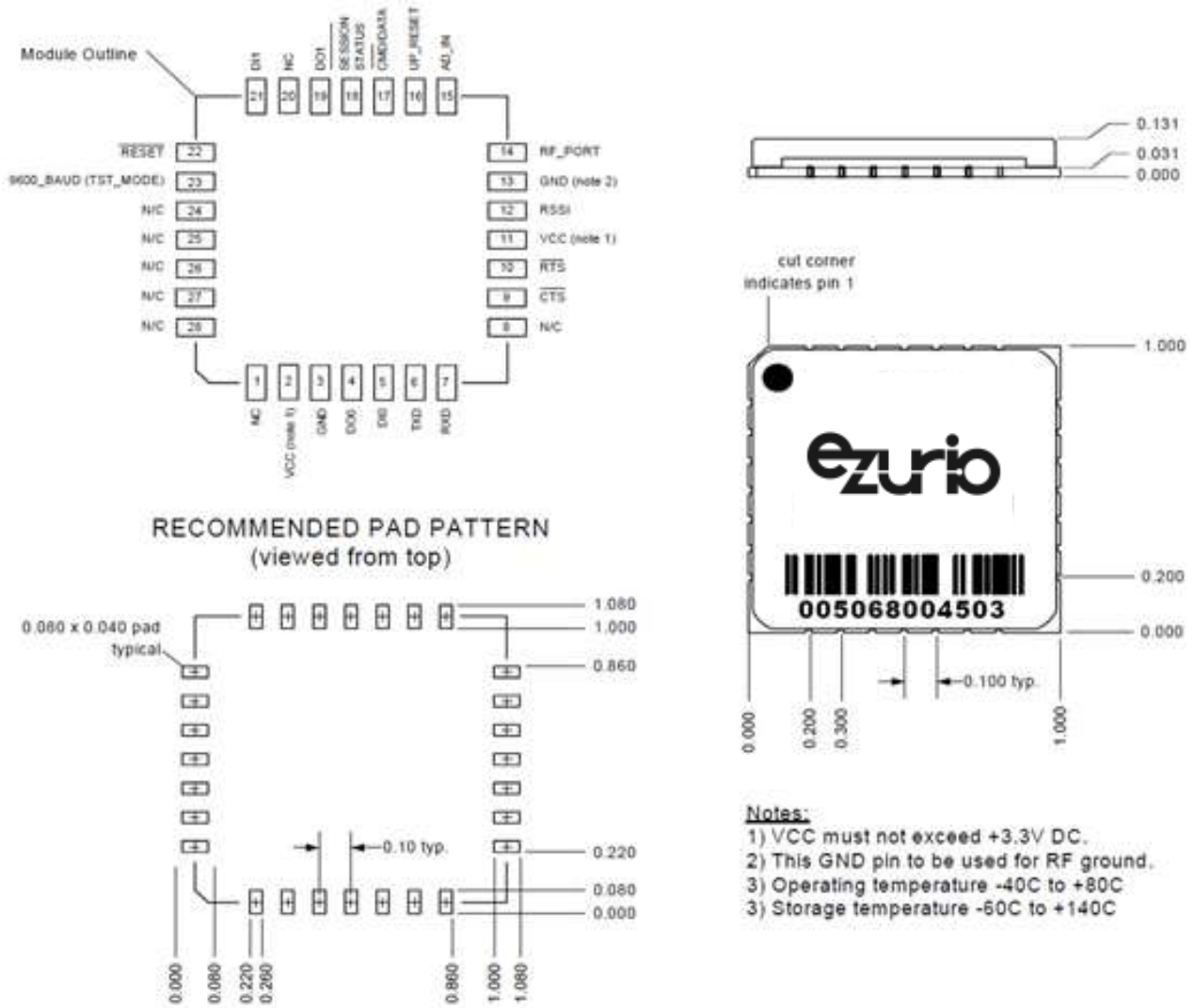

Figure 6: AC4790 1x1 Mechanical

© Copyright 2024 Ezurio
All Rights Reserved
Americas: +1-800-492-2320
Europe: +44-1628-858-940
Hong Kong: +852-2762-4823

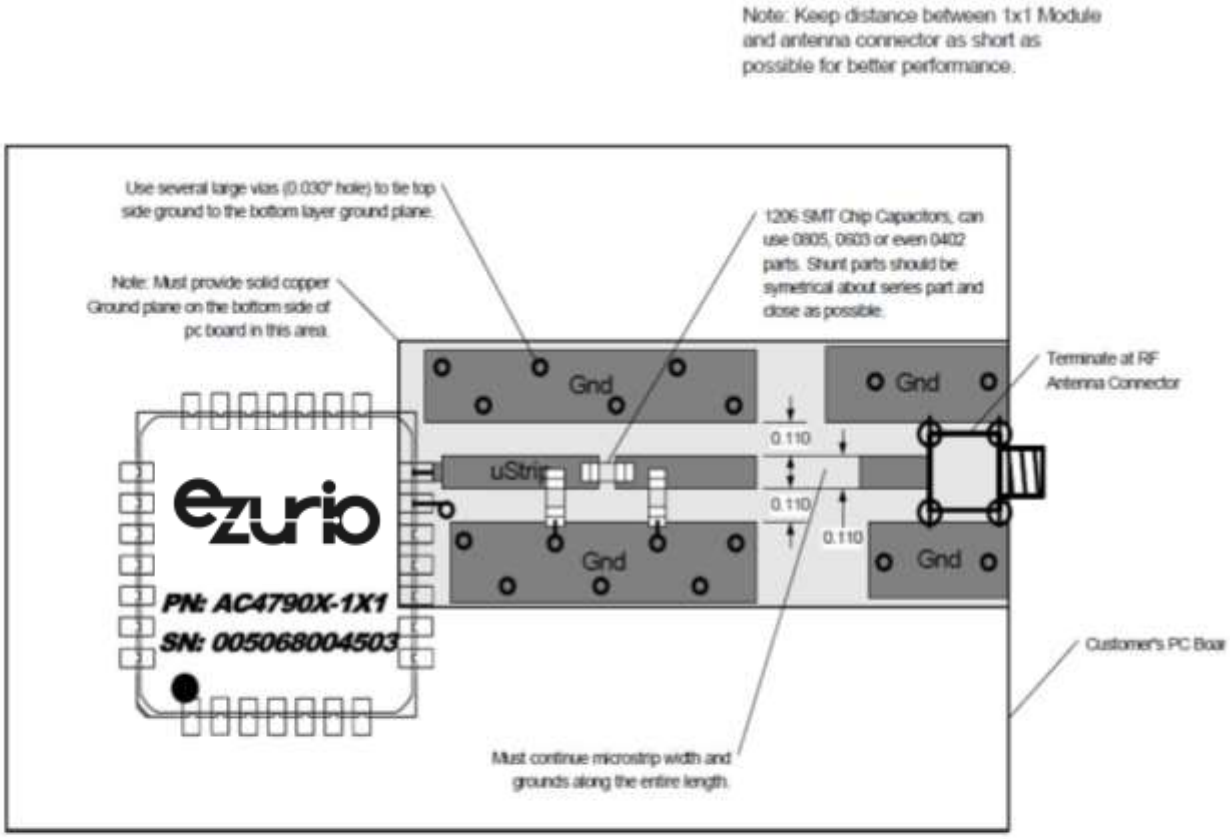

PCB THickness Notes:
For 0.062 thick PC board microstrip width and spacing is 0.110 inches.

For 0.031 thick PC board microstrip width and spacing is 0.055 inches.

Figure 7: AC4790 - 1x1 PCB Considerations

© Copyright 2024 Ezurio
All Rights Reserved
Americas: +1-800-492-2320
Europe: +44-1628-858-940
Hong Kong: +852-2762-4823

7 OUTPUT POWER

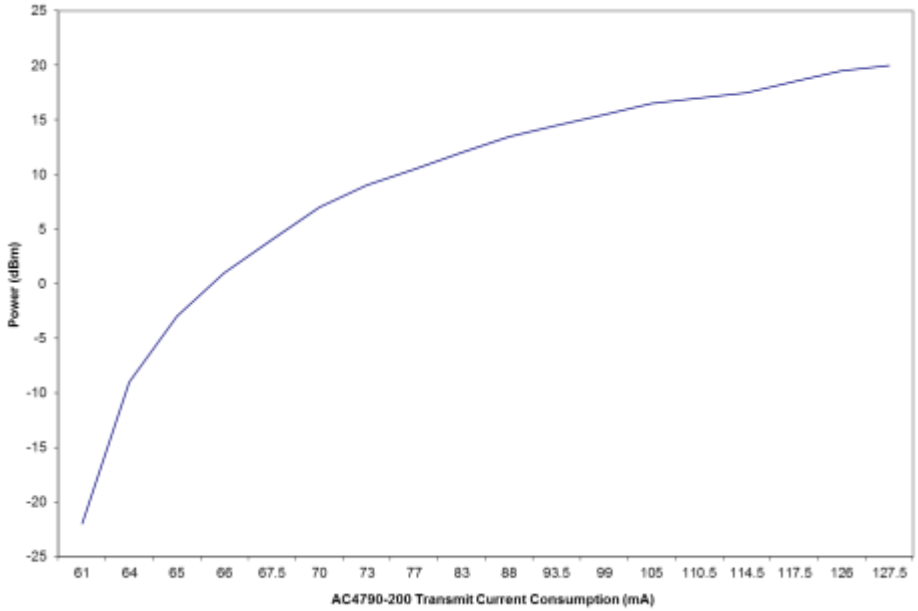

Figure 8: 4790-200M

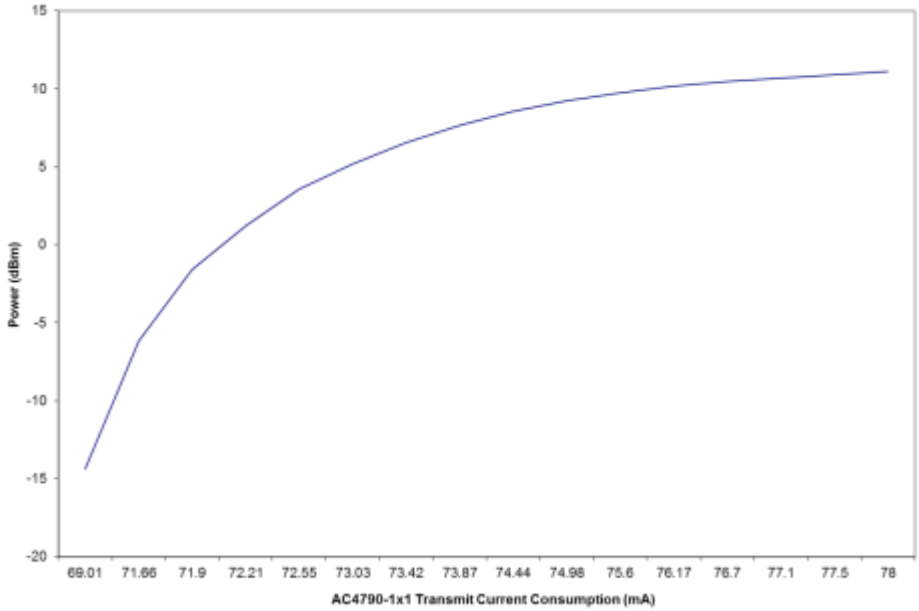

Figure 9: 4790-1x1

© Copyright 2024 Ezurio
All Rights Reserved
Americas: +1-800-492-2320
Europe: +44-1628-858-940
Hong Kong: +852-2762-4823

Table 7: AC4790-1000M (revision 1.0, 2.0, and 3.0 hardware)

Revision 1.0 Hardware				Revision 2.0 Hardware				Revision 3.0 Hardware			
EEPROM Value (Hex)	**Current (mA)**	**dBm**	**mW**	**EEPROM Value (Hex)**	**Current (mA)**	**dBm**	**mW**	**EEPROM Value (Hex)**	**Current (mA)**	**dBm**	**mW**
00	440	-5	0.31	0	400	-9.7	0.10	0	185	-7	0.19
01 (Low Power)	450	9.5	8.91	1	410	6.0	3.98	1	215	12.1	16.21
02	460	15.3	33.88	2	420	11.0	12.58	2	280	17.1	51.28
03	470	18.2	66.06	3	430	14.2	26.30	3	360	20.1	102.32
04	480	20.3	107.15	4	440	16.1	40.73	4	442	22.2	165.95
05	510	21.8	151.35	5	470	17.8	60.25	5	514	23.8	239.88
06	530	22	158.48	6	490	19.2	83.17	6	579	25.0	316.22
07 (Quarter Power)	560	24	251.18	7	520	20.4	109.64	7	652	26.2	416.86
08	590	25.1	323.59	8	560	21.5	141.25	8	704	27.0	501.18
09	620	25.8	380.18	9	590	22.3	169.82	9	766	27.6	575.43
0A (Half Power)	660	26.5	446.68	A	630	23.1	204.17	A	897	28.3	676.08
B	700	27.1	512.86	B	660	23.8	239.88	B	868	28.9	776.24
C	730	27.7	588.84	C	690	24.5	281.83				
D	760	28.2	660.69	D	720	25.1	323.59				
E	800	28.5	707.94	E	750	25.7	371.53				
				F	790	26.1	407.38				
				50	950	28.3	876.08				

Note: Maximum RF TX power of 28 dBm is calibrated and programmed in production per module, this is the same for revision 1.0 and 2.0 hardware. However, Half power (26dBm)=eeprom value 0A, Quarter power (23dBm)=eeprom value 07 and Low power (10dBm)=eeprom value 01 settings gives a lower RF TX power on AC4790-1000M revision 2.0 hardware. Customer must set the appropriate EEPROM hex value on AC4790-1000M revision 2.0 hardware to get half power (26dBm), quarter power (23dBm), and low power (10dBm) modes.

© Copyright 2024 Ezurio
All Rights Reserved
Americas: +1-800-492-2320
Europe: +44-1628-858-940
Hong Kong: +852-2762-4823

8 Timing Diagrams

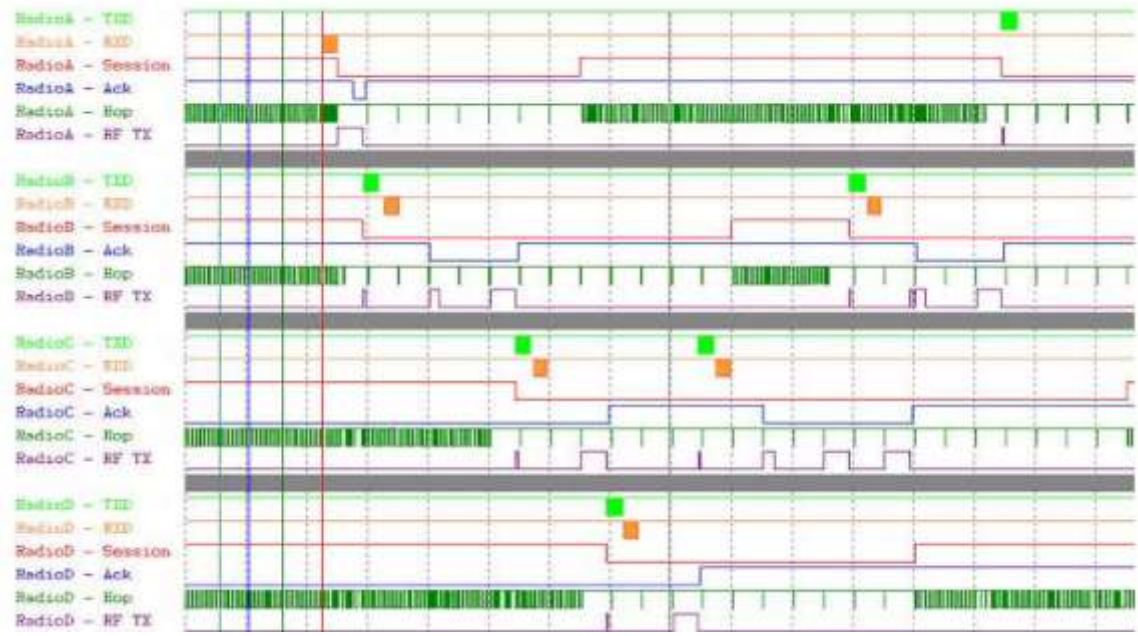

Session Count = 8, Retries = 3

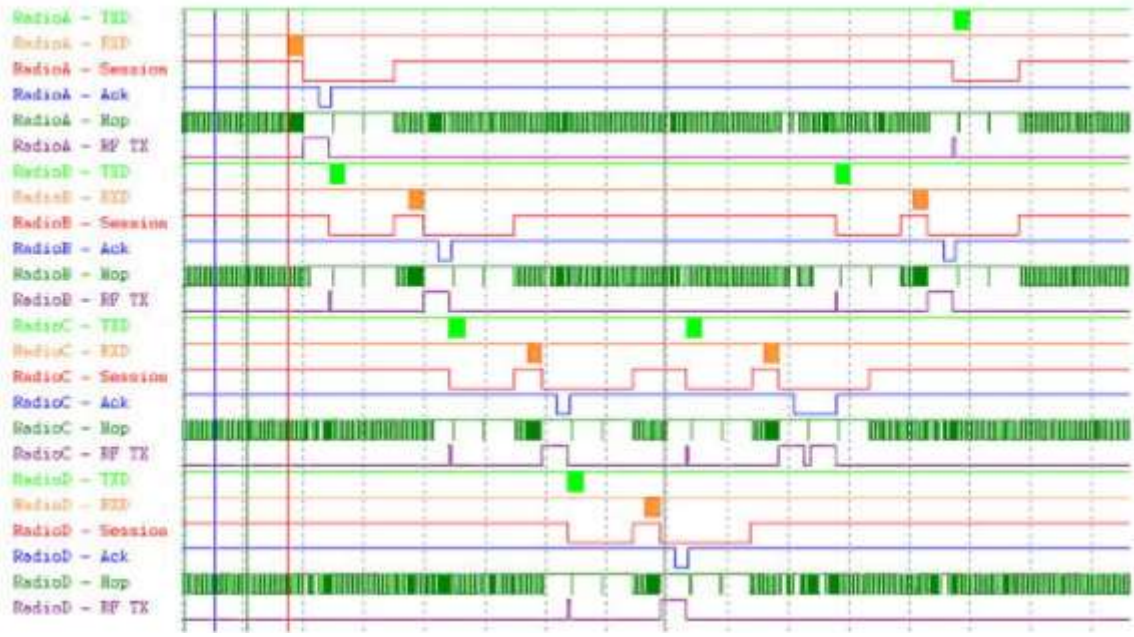

Session Count = 3, Retries = 3

© Copyright 2024 Ezurio
All Rights Reserved
Americas: +1-800-492-2320
Europe: +44-1628-858-940
Hong Kong: +852-2762-4823

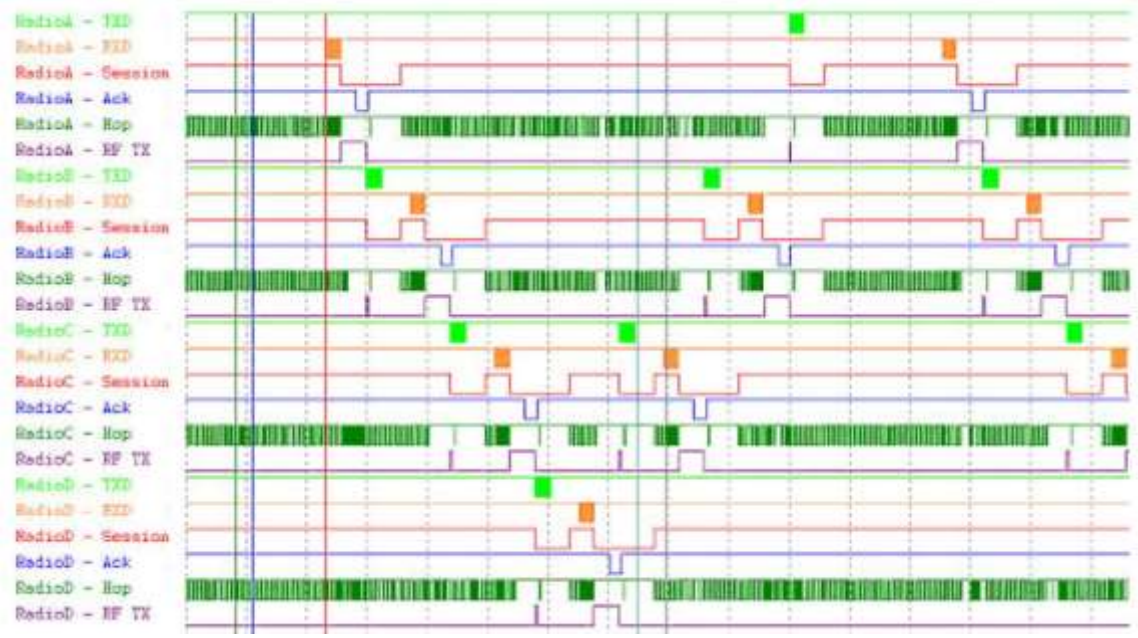

Session Count = 2, Retries = 2

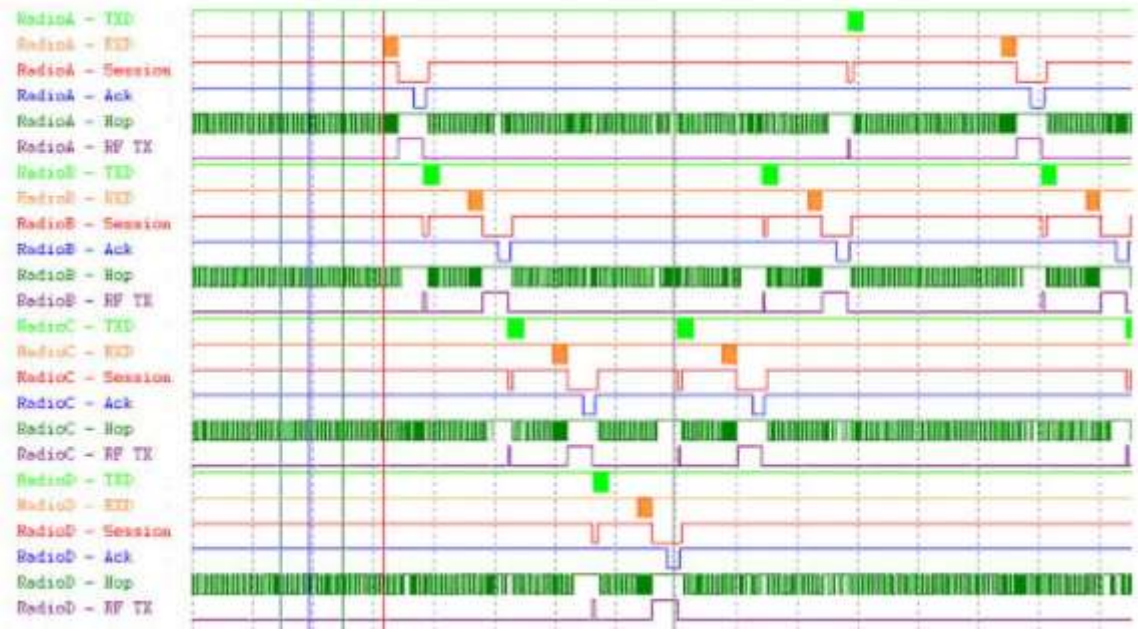

Session Count = 1, Retries = 1

© Copyright 2024 Ezurio
All Rights Reserved
Americas: +1-800-492-2320
Europe: +44-1628-858-940
Hong Kong: +852-2762-4823

9 Ordering Information

Part	Type	Interface	Antenna Option	Output Power
AC4790-1000M	Module	3.3V TTL	MMCX Connector	1000 mW
AC4790LR-1000M	Module	3.3V TTL	MMCX Connector	1000 mW (Long Range)
AC4790-200M	Module	3.3V TTL	MMCX Connector	200 mW (US, Canada Only)

9.1 Product Marketing Name

Model name	Product name
AC4790-1000M	902 - 928 MHz FHSS, 0 - 1 W, MMCX
AC4790LR-1000M	902 - 928 MHz FHSS, 0 - 1 W, MMCX, Long Range

9.2 Developer Kit Part Numbers

All of the above part numbers can be ordered as a development kit by prefacing the part number with “SDK-”. As an example, part number AC4790-200A can be ordered as a development kit using the part number: SDK-AC4790-200A.

All developer’s kits include (2) transceivers, (2) development boards, (2) 7.5V DC unregulated power supplies, (2) serial cables, (2) USB cables, (2) antennas, configuration/testing software and integration engineering support.

10 Compliance Information

10.1 AC4790 – 1X1

Since the RF antenna trace resides on the OEM host PCB, the FCC will not grant modular approval for the AC4790- 1x1 and requires the OEM to submit their completed design for approval. Contact us for the approval procedure.

10.2 Agency Identification Numbers

Agency compliancy is a very important requirement for any product development. We have obtained modular approval for its products so the OEM only has to meet a few requirements to be eligible to use that approval. The corresponding agency identification numbers and approved antennas are listed in Table 8.

Table 8: Agency Identification Numbers

Part Number	US/FCC	Canada/IC
AC4790-200A	KQLAC4490-100	2268C-AC4490
AC4790-200/AC4790LR-200	KQL-4x90200	2268C-4x90200
AC4790-1000 AC4790LR-1000	KQL-AC4490	2268C-44901000

© Copyright 2024 Ezurio
All Rights Reserved
Americas: +1-800-492-2320
Europe: +44-1628-858-940
Hong Kong: +852-2762-4823

10.3 Approved Antenna List

The following antennas are approved for use with the AC4790 as identified. The OEM may choose another vendor's antenna of like type and equal or lesser gain as a listed antenna and still maintain compliance.

Table 9: AC4790 Approved Antennas (for revision 1.0 hardware)

Part #	Manufacturer Part #	Manufacturer	Type	Gain (dBi)	200M	1000M
0600-00019	S467FL-5-RMM-915S	Nearson	1/2 Wave Dipole	2	X	X
0600-00025	S467FL-5-RMM-915	Nearson	1/2 Wave Dipole	2	X	X
0600-00024	S467AH-915S	Nearson	1/2 Wave Dipole	2	X	X
0600-00027	S467AH-915R	Nearson	1/2 Wave Dipole	2	X	X
0600-00028	S161AH-915R	Nearson	1/2 Wave Dipole	2.5	X	X
0600-00029	S161AH-915	Nearson	1/2 Wave Dipole	2.5	X	X
0600-00030	S331AH-915	Nearson	1/4 Wave Dipole	1	X	X
-	1020B5812-04 Flavus	gigaAnt	Microstrip	-0.5	-	-
-	Y2283[1]	Comtelco	Yagi	6dBd	X	X
-	Y2283A0915-10RP	Comtelco	Yagi	6dBd	X	X
-	SG101N915[1]	Nearson	Omni	5	X	X
-	SG101NT-915	Nearson	Omni	5	X	X
-	GM113	V.Torch	Omni	3.5	X	-
-	PC8910NRTN	Cushcraft	Yagi	11dBd	-	-
-	ANT-DB1-RMS	Antenna Factor	Monopole	3	X	-

1. Strictly requires professional installation.

Table 10: AC4490 Approved Antennas (for revision 2.0 hardware -1000M)

Part #	Manufacturer Part #	Manufacturer	Type	Gain (dBi)	1000M
0600-00019	S467FL-5-RMM-915S	Nearson	1/2 Wave Dipole	2	X
0600-00025	S467FL-5-RMM-915	Nearson	1/2 Wave Dipole	2	X
	S467AH-915	Nearson	1/2 Wave Dipole	2	X
0600-00024	S467AH-915S	Nearson	1/2 Wave Dipole	2	X
0600-00028	S161AH-915R	Nearson	1/2 Wave Dipole	2.5	X
0600-00029	S161AH-915	Nearson	1/2 Wave Dipole	2.5	X

10.4 FCC Requirements for Modular Approval

Federal Communication Commission Interference Statement

This equipment has been tested and found to comply with the limits for a Class B digital device, pursuant to Part 15 of the FCC Rules. These limits are designed to provide reasonable protection against harmful interference in a residential installation. This equipment generates, uses and can radiate radio frequency energy and, if not installed and used in accordance with the instructions, may cause harmful interference to radio communications. However, there is no guarantee that interference will not occur in a particular installation. If this equipment does cause harmful interference to radio or television reception, which can be determined by turning the equipment off and on, the user is encouraged to try to correct the interference by one of the following measures:

- Reorient or relocate the receiving antenna.
- Increase the separation between the equipment and receiver.
- Connect the equipment into an outlet on a circuit different from that to which the receiver is connected.
- Consult the dealer or an experienced radio/TV technician for help.

FCC Caution: Any changes or modifications not expressly approved by the party responsible for compliance could void the user's authority to operate this equipment.

This device complies with Part 15 of the FCC Rules. Operation is subject to the following two conditions: (1) This device may not cause harmful interference, and (2) this device must accept any interference received, including interference that may cause undesired operation.

© Copyright 2024 Ezurio
All Rights Reserved
Americas: +1-800-492-2320
Europe: +44-1628-858-940
Hong Kong: +852-2762-4823

IMPORTANT NOTE:

FCC Radiation Exposure Statement:

This equipment complies with FCC radiation exposure limits set forth for an uncontrolled environment. This equipment should be installed and operated with minimum distance 20cm between the radiator & your body.

This transmitter must not be co-located or operating in conjunction with any other antenna or transmitter.

Integration instructions for host product manufacturers

Applicable FCC rules to module

FCC Part 15.247

Summarize the specific operational use conditions

The module is must be installed in mobile device.

This device is intended only for OEM integrators under the following conditions:

1. The antenna must be installed such that 20 cm is maintained between the antenna and users, and
2. The transmitter module may not be co-located with any other transmitter or antenna

As long as 2 conditions above are met, further transmitter test will not be required. However, the OEM integrator is still responsible for testing their end-product for any additional compliance requirements required with this module installed.

IMPORTANT NOTE: In the event that these conditions can not be met (for example certain laptop configurations or co-location with another transmitter), then the FCC authorization is no longer considered valid and the FCC ID can not be used on the final product. In these circumstances, the OEM integrator will be responsible for re-evaluating the end product (including the transmitter) and obtaining a separate FCC authorization. The OEM integrator has to be aware not to provide information to the end user regarding how to install or remove this RF module in the user's manual of the end product which integrates this module.

The end user manual shall include all required regulatory information/warning as show in this manual.

Limited module procedures

Not applicable

Trace antenna designs

Not applicable

RF exposure considerations

20 cm separation distance and co-located issue shall be met as mentioned in "Summarize the specific operational use conditions".

Product manufacturer shall provide below text in end-product manual

"This equipment complies with FCC radiation exposure limits set forth for an uncontrolled environment. This equipment should be installed and operated with minimum distance 20cm between the radiator & your body."

Label and Compliance Information

Product manufacturers need to provide a physical or e-label stating

"Contains FCC ID: KQL-AC4490 / KQL-4x90200 / KQLAC4490-100" with finished product

Information on Test Modes and Additional Testing Requirements

Test tool: Configuration and Test Utility Software (Range Test tab) shall be used to set the module to transmit continuously.

Additional Testing, Part 15 Subpart B Disclaimer

The module is only FCC authorized for the specific rule parts listed on the grant, and that the host product manufacturer is responsible for compliance to any other FCC rules that apply to the host not covered by the modular transmitter grant of certification. The final host product still requires Part 15 Subpart B compliance testing with the modular transmitter installed.

For certified antenna list, see Table 9 for all revision 1.0 hardware and Table 10 for revision 2.0 hardware (AC4790-1000M / AC4790LR-1000M).

10.5 ISED Requirements for Modular Approval

This device contains licence-exempt transmitter(s)/receiver(s) that comply with Innovation, Science and Economic Development Canada's licence-exempt RSS(s). Operation is subject to the following two conditions:

1. This device may not cause interference
2. This device must accept any interference, including interference that may cause undesired operation of the device

L'émetteur/récepteur exempt de licence contenu dans le présent appareil est conforme aux CNR d'Innovation, Sciences et Développement économique Canada applicables aux appareils radio exempts de licence. L'exploitation est autorisée aux deux conditions suivantes :

1. *L'appareil ne doit pas produire de brouillage;*
2. *L'appareil doit accepter tout brouillage radioélectrique subi, même si le brouillage est susceptible d'en compromettre le fonctionnement.*

© Copyright 2024 Ezurio
All Rights Reserved
Americas: +1-800-492-2320
Europe: +44-1628-858-940
Hong Kong: +852-2762-4823

Radiation Exposure Statement:

This equipment complies with Canada radiation exposure limits set forth for an uncontrolled environment. This equipment should be installed and operated with minimum distance 20cm between the radiator & your body.

Déclaration d'exposition aux radiations:

Cet équipement est conforme Canada limites d'exposition aux radiations dans un environnement non contrôlé. Cet équipement doit être installé et utilisé à distance minimum de 20cm entre le radiateur et votre corps.

This device is intended only for OEM integrators under the following conditions:

1. The transmitter module may not be co-located with any other transmitter or antenna.

As long as 1 condition above are met, further transmitter test will not be required. However, the OEM integrator is still responsible for testing their end-product for any additional compliance requirements required with this module installed.

Cet appareil est conçu uniquement pour les intégrateurs OEM dans les conditions suivantes:

1. *Le module émetteur peut ne pas être coïmplanté avec un autre émetteur ou antenne.*

Tant que les 1 condition ci-dessus sont remplies, des essais supplémentaires sur l'émetteur ne seront pas nécessaires. Toutefois, l'intégrateur OEM est toujours responsable des essais sur son produit final pour toutes exigences de conformité supplémentaires requis pour ce module installé.

IMPORTANT NOTE:

In the event that these conditions can not be met (for example certain laptop configurations or co-location with another transmitter), then the Canada authorization is no longer considered valid and the ISED ID can not be used on the final product. In these circumstances, the OEM integrator will be responsible for re-evaluating the end product (including the transmitter) and obtaining a separate Canada authorization.

NOTE IMPORTANTE:

Dans le cas où ces conditions ne peuvent être satisfaites (par exemple pour certaines configurations d'ordinateur portable ou de certaines co-localisation avec un autre émetteur), l'autorisation du Canada n'est plus considéré comme valide et l'ID IC ne peut pas être utilisé sur le produit final. Dans ces circonstances, l'intégrateur OEM sera chargé de réévaluer le produit final (y compris l'émetteur) et l'obtention d'une autorisation distincte au Canada.

End Product Labeling

The final end product must be labeled in a visible area with the following: “Contains ISED: 2268C-44901000 / 2268C-4x90200 / 2268C-AC4490”.

Plaque signalétique du produit final

Le produit final doit être étiqueté dans un endroit visible avec l'inscription suivante: "Contient des ISED: 2268C-44901000 / 2268C-4x90200 / 2268C-AC4490".

Manual Information to the End User

The OEM integrator has to be aware not to provide information to the end user regarding how to install or remove this RF module in the user’s manual of the end product which integrates this module.

The end user manual shall include all required regulatory information/warning as show in this manual.

Manuel d'information à l'utilisateur final

L'intégrateur OEM doit être conscient de ne pas fournir des informations à l'utilisateur final quant à la façon d'installer ou de supprimer ce module RF dans le manuel de l'utilisateur du produit final qui intègre ce module.

Le manuel de l'utilisateur final doit inclure toutes les informations réglementaires requises et avertissements comme indiqué dans ce manuel.

(For transmitters equipped with detachable antennas)

This radio transmitter [ISED: 2268C-44901000 / 2268C-4x90200 / 2268C-AC4490] has been approved by Innovation, Science and Economic Development Canada to operate with the antenna types listed below, with the maximum permissible gain indicated. Antenna types not included in this list that have a gain greater than the maximum gain indicated for any type listed are strictly prohibited for use with this device.

Le présent émetteur radio ISED: 2268C-44901000 / 2268C-4x90200 / 2268C-AC4490] a été approuvé par Innovation, Sciences et Développement économique Canada pour fonctionner avec les types d'antenne énumérés ci dessous et ayant un gain admissible maximal. Les types d'antenne non inclus dans cette liste, et dont le gain est supérieur au gain maximal indiqué pour tout type figurant sur la liste, sont strictement interdits pour l'exploitation de l'émetteur.

For certified antenna list, see Table 9 for all revision 1.0 hardware and Table 10 for revision 2.0 hardware (AC4790-1000M / AC4790LR-1000M).

10.6 Antenna Requirements

WARNING for Hardware Revision 1.0: This device has been tested with an MMCX connector with the above listed antennas. When integrated into the OEM’s product, these fixed antennas require professional installation preventing end-users from replacing them with non-approved antennas. Antenna Y2283 and SG101N915 strictly require professional installation. Any antenna not in the previous table must be tested to comply with FCC Section 15.203 for unique antenna connectors and Section 15.247 for emissions. Contact us for assistance.

Caution: Any change or modification not expressly approved by Ezurio could void the user's authority to operate the equipment.

For certified antenna list, see Table 9 for all revision 1.0 hardware.

© Copyright 2024 Ezurio
All Rights Reserved
Americas: +1-800-492-2320
Europe: +44-1628-858-940
Hong Kong: +852-2762-4823

WARNING for Hardware Revision 2.0: This device has been tested with an MMCX connector with the above listed antennas. When integrated into the OEM's product, these fixed antennas require professional installation preventing end-users from replacing them with non-approved antennas. Any antenna not in the previous table must be tested to comply with FCC Section 15.203 and Section 15.247 for emissions. Contact us for assistance.

Caution: Any change or modification not expressly approved by Ezurio could void the user's authority to operate the equipment.

For certified antenna list, see Table 10 for revision 2.0 hardware (AC4790-1000M / AC4790LR-1000M).

WARNING for Hardware Revision 3.0: This device has been tested with an MMCX connector with the above listed antennas. When integrated into the OEM's product, these fixed antennas require professional installation preventing end-users from replacing them with non-approved antennas. Any antenna not in the previous table must be tested to comply with FCC Section 15.203 and Section 15.247 for emissions. Contact us for assistance.

Caution: Any change or modification not expressly approved by Ezurio could void the user's authority to operate the equipment.

For certified antenna list, see Table 10 for revision 2.0 hardware (AC4790-1000M / AC4790LR-1000M).

10.7 Channel Warning

The OEM must prevent the end-user from selecting a channel not approved for use by the governing body in the country in which this product is implemented.

© Copyright 2024 Ezurio
All Rights Reserved
Americas: +1-800-492-2320
Europe: +44-1628-858-940
Hong Kong: +852-2762-4823

11 Revision 2.0 and Revision 3.0 Hardware (AC4790-1000M, AC4790LR-1000M)

11.1 Revision 2.0 hardware

The Qorvo RF power amplifier (RF2173) used on old pre-revision 2.0 hardware is now EoL (End of Life) and the redesigned revision 2.0 hardware uses a new Qorvo RF power amplifier (RF6886).

Additionally, revision 2.0 hardware has the following changes to help ease sourcing issues:

- Changed RF filters (LPF ceramic and BPF SAW) but with similar specifications.
- 14.7456MHz crystal changed and body size reduction, but with similar specification.
- Passive component body size reduction
- and therefore, PCB layout changed.

Revision 2.0 hardware is form, fit, function equivalent to older pre-revision 2.0 hardware. See PCN 7B - 2022.

11.2 Revision 3.0 hardware

The Qorvo RF power amplifier (RF6886) used on revision 2.0 hardware is now EoL (End of Life) and the redesigned revision 3.0 hardware uses a Guerrilla RF (GRF5509):

Revision 3.0 hardware is form, fit, function equivalent to the revision 2.0 hardware. See PCN….

12 Appendix I: 5V to 3.3V Levels

All inputs on the AC4790-200 & AC4790-1000, AC4790LR-1000 are weakly pulled high via 10k ohm resistors. The AC4790-200 has 5 V inputs while the AC4790-1000, AC4470LR & AC4790-1x1 have 3.3 V inputs. The AC4790-200 uses an octal buffer to drop the 5 V to the required 3.3 V level; the -1000 and -1x1 leave this to the OEM.

Some of the most common voltage conversion methods are described in the following sections.

12.1 Voltage Level Conversion IC's

This is the easiest and most efficient method. Ezurio recommends the TI SN74LVC244A Octal Buffer/Driver. Inputs can be driven from 3.3 or 5 V systems, allowing the device to be used in a mixed 3.3/5 V system.

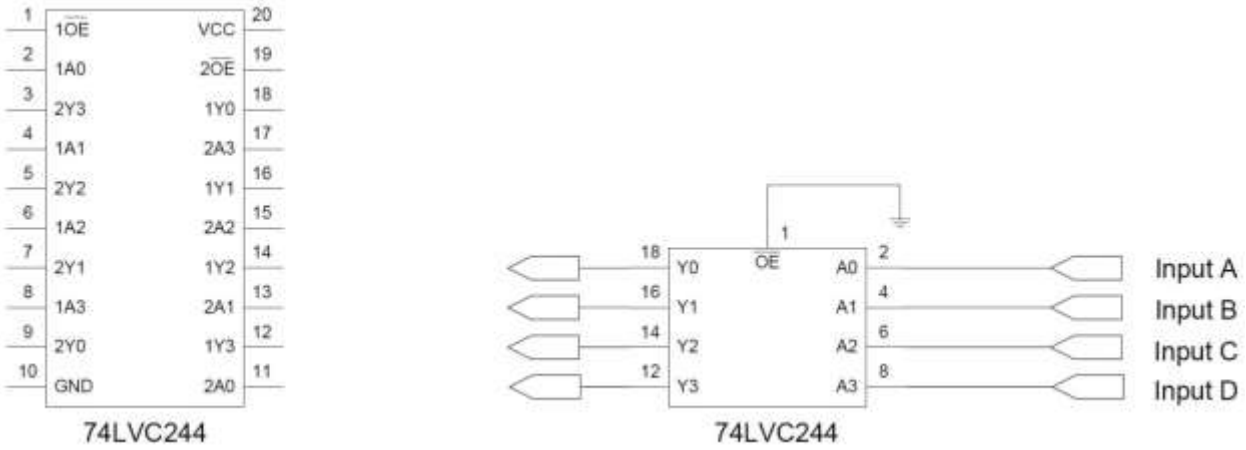

Figure 10: 74LVC255 Integrated Circuits

12.2 Passive Resistor Voltage Divider

While a resistor voltage divider can successfully drop the 5 V to the required 3.3 V, it will draw static current all of the time. Typically this method is only suitable for one-way 5 V to 3.3 V conversion. When choosing the resistor values, one needs to include the radio's internal 10kohm resistors on the input signals.

13 Appendix II: Sample Power Supply

This appendix describes a simple switching power supply that provides enough current to easily power any Ezurio OEM module. It utilizes low cost, off-the-shelf components that fit into a small area. This supply has an input voltage range of +6 volts to +18 volts and outputs +3.4 volts at 1.5 amps.

© Copyright 2024 Ezurio
All Rights Reserved
Americas: +1-800-492-2320
Europe: +44-1628-858-940
Hong Kong: +852-2762-4823

Included is a schematic, bill of materials with manufacture's name and part numbers, and a sample PCB layout. It is important to follow the layout suggestions and use large areas of copper to connect the devices as shown in the layout. It is also important to hook up the ground traces as shown and use multiple vias to connect input and output capacitors to the bottom side ground plane.

If the input voltage is fewer than 12 volts then C1 and C2 can be replaced with a single 100 uF 20 volt capacitor (same part number as C7). This reduces board space and lowers costs further. If you are powering an AC5124 module, R1 can be changed to a 373 ohm 1% resistor. This changes the output to +5 volts at 1.0 amps.

13.1 Bill of Materials

Table 11: Power Supply Bill of Materials

Qty	Reference	Value	Description	Mfg.	Mfg. part number
1	R1	210	Res, 0603, 210, 1/16W, 1%	KOA	RK73H1JT2100F
1	R2	127	Res, 0603, 127, 1/16W, 1%	KOA	RK73H1JT1270F
2	C1 C2	47uF	Cap, Tant, 7343, 47uF, 35V	AVX	TPSE476M035R0200
3	C3 C4 C5	0.1 uF	Cap, Cer, 0603, 0.1uF, Y5V, 25V	Murata	GRM39Y5V104Z025AD
1	C6	3300 pF	Cap, Cer, 0603, 3300pF, X7R, 50V	Murata	GRM39X7R332K050AD
1	C7	100 uF	Cap, Tant, 7343, 100uF, 20V	Kemet	T491X107K020A5
1	D1	B230/A	Diode, SMB, B230/A, 2A, Schottkey	Diodes, Inc.	B230/A
1	D2	LL4148	Diode, MELF, LL4148, Switch Diode	Diodes, Inc.	LL4148
1	L1	15 uH	Xfmr, 2P, SMT, 15uH, 2A	Coiltronics	UP2.8B150
1	U1	CS51413	IC, CS51413, 8P, SO, Switch Reg Ctrl	On-Semicond	CS51413

© Copyright 2024 Ezurio
All Rights Reserved
Americas: +1-800-492-2320
Europe: +44-1628-858-940
Hong Kong: +852-2762-4823

13.2 Schematic

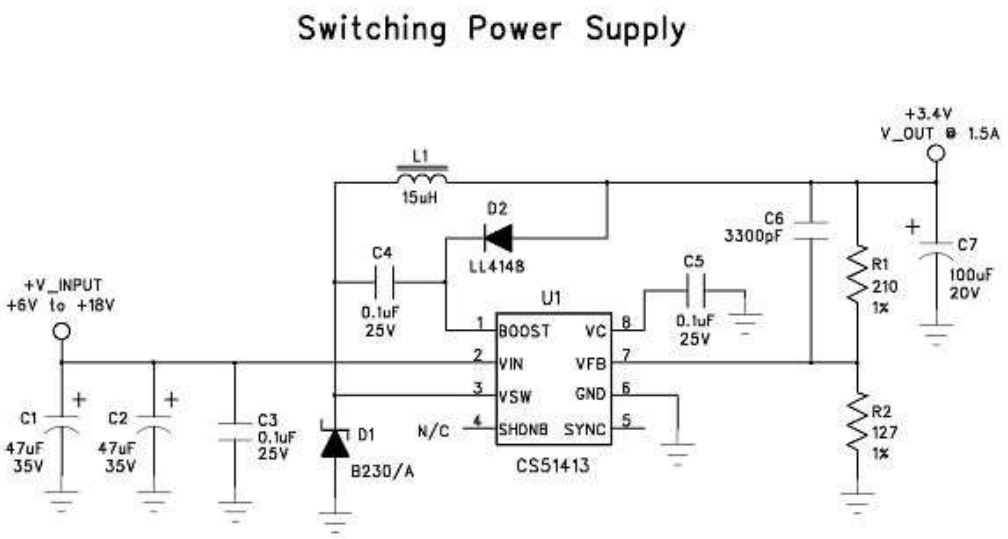

13.3 PCB Layout

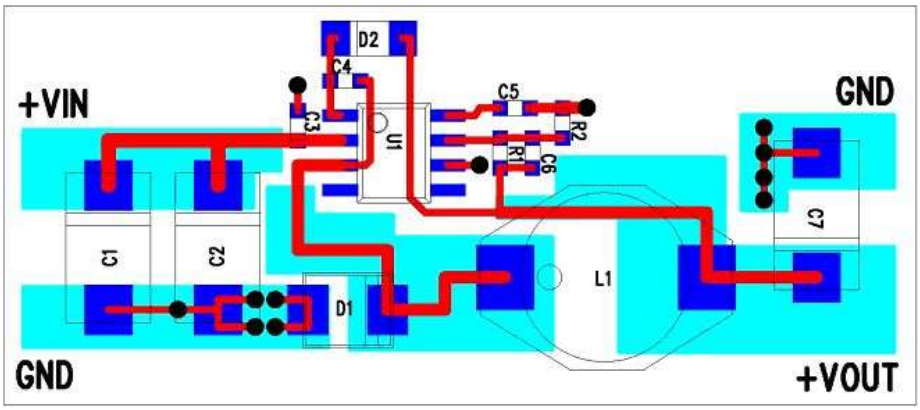

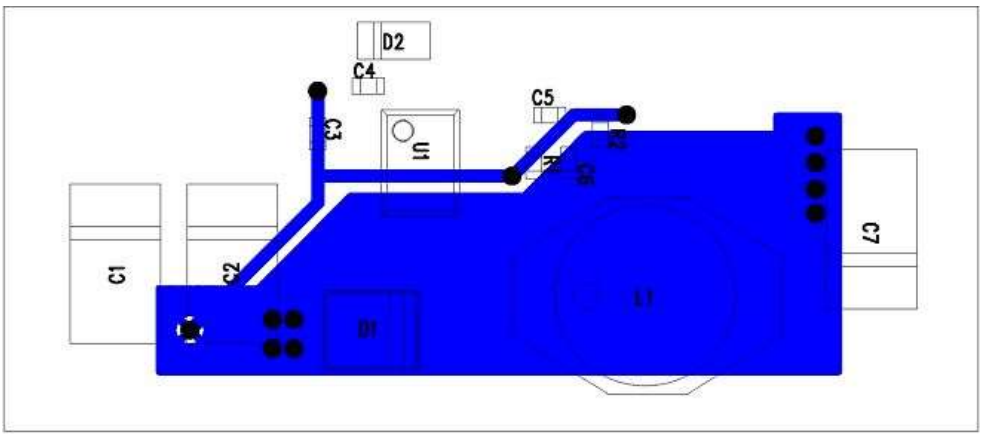

© Copyright 2024 Ezurio
All Rights Reserved
Americas: +1-800-492-2320
Europe: +44-1628-858-940
Hong Kong: +852-2762-4823

14 Appendix III: Product Throughput

Table 12: Product Matrix

Part Number	AC 4790- 1x1	AC4790- 200	AC4790-1000
Cost	< $40	< $50	< $60
Size	1.0" x 1.0" x 0.125"	1.9" x 1.65" x 0.20"	1.9" x 1.65" x 0.20"
Range	Up to 1 mile	Up to 4 miles	Up to 20 miles
Throughput	32kbps	20kbps	20kbps
Current Draw RX	28mA	30mA	30mA
Current Draw TX	80mA	106mA	1300mA
Current Draw in Sleep Mode	N/A	N/A	N/A
Chan	48	48	32
Band	900MHz	900MHz	900MHz
3.3V	Yes	Yes	Yes
Unit	Module	Module	Module
Approvals	None; requires end approval by OEM	FCC/IC	FCC/IC
API	Yes	Yes	Yes
Integrated Antenna Available	No	Yes	No
RS485 Output Available	Yes	Yes	Yes

© Copyright 2024 Ezurio
All Rights Reserved
Americas: +1-800-492-2320
Europe: +44-1628-858-940
Hong Kong: +852-2762-4823

15 Related Documents and Files

The following additional AC4790 technical documents are also available from the AC4790 product page at https://www.ezurio.com/ac4790

- AC4790 Product Brief
- AC4790 Datasheet
- Statement of Compliance to EU WEEE Directive and RoHS Directive

The following downloads are also available from the software downloads tab of the AC4790 product page:

- Configuration Utility
- USB Drivers

© Copyright 2024 Ezurio
All Rights Reserved
Americas: +1-800-492-2320
Europe: +44-1628-858-940
Hong Kong: +852-2762-4823

16 Additional Information

Please contact your local sales representative or our support team for further assistance:

Headquarters	Ezurio 50 S. Main St. Suite 1100 Akron, OH 44308 USA
Phone	Americas: +1-800-492-2320 Europe: +44-1628-858-940 Hong Kong: +852-2762-4823
Website	http://www.ezurio.com
Technical Support	http://www.ezurio.com/resources/support
Sales Contact	http://www.ezurio.com/contact

Note: Information contained in this document is subject to change.

Ezurio's products are subject to standard Terms & Conditions.

http://www.ezurio.com

© Copyright 2024 Ezurio All Rights Reserved. Any information furnished by Ezurio and its agents is believed to be accurate but cannot be guaranteed. All specifications are subject to change without notice. Responsibility for the use and application of Ezurio materials or products rests with the end user since Ezurio and its agents cannot be aware of all potential uses. Ezurio makes no warranties as to non-infringement nor as to the fitness, merchantability, or sustainability of any Ezurio materials or products for any specific or general uses. Ezurio or any of its affiliates or agents shall not be liable for incidental or consequential damages of any kind. All Ezurio products are sold pursuant to the Ezurio Terms and Conditions of Sale in effect from time to time, a copy of which will be furnished upon request. Nothing herein provides a license under any Ezurio or any third-party intellectual property right. Ezurio and its associated logos are trademarks owned by Ezurio and/or its affiliates.

© Copyright 2024 Ezurio
All Rights Reserved