FCC Measurement/Technical Report on

CMBTRX1

FCC ID: KR5CMBTRX1
IC: 7812D-CMBTRX1

Test Report Reference: MDE_CONTI_2135_FCC_01

Test Laboratory:
7layers GmbH
Borsigstrasse 11
40880 Ratingen
Germany

Deutsche Akkreditierungsstelle
D-PL-12140-01-01
D-PL-12140-01-02
D-PL-12140-01-03

Note:
The following test results relate only to the devices specified in this document. This report shall not be reproduced in parts without the written approval of the test laboratory.

Table of Contents

1 Applied Standards and Test Summary 3

1.1 Applied Standards 3

1.2 FCC-IC Correlation Table 4

1.3 Measurement Summary 4

2 Revision History / Signatures 7

3 Administrative Data 8

3.1 Testing Laboratory 8

3.2 Project Data 8

3.3 Applicant Data 8

3.4 Manufacturer Data 8

4 Test object Data 9

4.1 General EUT Description 9

4.2 EUT Main components 9

4.3 Ancillary Equipment 10

4.4 Auxiliary Equipment 10

4.5 EUT Setups 10

4.6 Operating Modes / Test Channels 11

4.7 Product labelling 11

5 Test Results 12

5.1 Occupied Bandwidth (6 dB) 12

5.2 Occupied Bandwidth (99%) 14

5.3 Peak Power Output 16

5.4 Transmitter Spurious Radiated Emissions 20

5.5 Band Edge Compliance Conducted 27

5.6 Band Edge Compliance Radiated 30

5.7 Power Density 33

6 Test Equipment 37

7 Antenna Factors, Cable Loss and Sample Calculations 40

7.1 LISN R&S ESH3-Z5 (150 kHz – 30 MHz) 40

7.2 Antenna R&S HFH2-Z2 (9 kHz – 30 MHz) 41

7.3 Antenna R&S HL562 (30 MHz – 1 GHz) 42

7.4 Antenna R&S HF907 (1 GHz – 18 GHz) 43

7.5 Antenna EMCO 3160-09 (18 GHz – 26.5 GHz) 44

7.6 Antenna EMCO 3160-10 (26.5 GHz – 40 GHz) 45

8 Measurement Uncertainties 46

9 Photo Report 47

1 APPLIED STANDARDS AND TEST SUMMARY

1.1 APPLIED STANDARDS

Type of Authorization
Certification for an Intentional Radiator.

Applicable FCC Rules

Prepared in accordance with the requirements of FCC Rules and Regulations as listed in 47 CFR Ch.1 Parts 2 and 15 (10-1-20 Edition). The following subparts are applicable to the results in this test report.

Part 2, Subpart J - Equipment Authorization Procedures, Certification

Part 15, Subpart C – Intentional Radiators

§ 15.201 Equipment authorization requirement

§ 15.207 Conducted limits

§ 15.209 Radiated emission limits; general requirements

§ 15.247 Operation within the bands 902-928 MHz, 2400-2483.5 MHz

Note:
The tests were selected and performed with reference to the FCC Public Notice "Guidance for Compliance Measurements on Digital Transmission System, Frequency Hopping Spread Spectrum System, and Hybrid System Devices Operating under Section 15.247 of the FCC Rules, 558074 D01 15.247 Meas Guidance v05r02, 2019-04-02". ANSI C63.10–2013 is applied.

1.2 FCC-IC CORRELATION TABLE

Correlation of measurement requirements for DTS (e.g. WLAN 2.4 GHz, BT LE) equipment from FCC and IC

DTS equipment

Measurement	FCC reference	IC reference
Conducted emissions on AC Mains	§ 15.207	RSS-Gen Issue 5: 8.8
Occupied bandwidth	§ 15.247 (a) (2)	RSS-247 Issue 2: 5.2 (a)
Peak conducted output power	§ 15.247 (b) (3), (4)	RSS-247 Issue 2: 5.4 (d)
Transmitter spurious RF conducted emissions	§ 15.247 (d)	RSS-Gen Issue 5: 6.13 / 8.9/8.10; RSS-247 Issue 2: 5.5
Transmitter spurious radiated emissions	§ 15.247 (d); § 15.209 (a)	RSS-Gen Issue 5: 6.13 / 8.9/8.10; RSS-247 Issue 2: 5.5
Band edge compliance	§ 15.247 (d)	RSS-247 Issue 2: 5.5
Power density	§ 15.247 (e)	RSS-247 Issue 2: 5.2 (b)
Antenna requirement	§ 15.203 / 15.204	RSS-Gen Issue 5: 8.3
Receiver spurious emissions	–	–

1.3 MEASUREMENT SUMMARY

47 CFR CHAPTER I FCC PART 15 Subpart C §15.247 **§ 15.247 (a) (2)**

Occupied Bandwidth (6 dB)
The measurement was performed according to ANSI C63.10, chapter 11.8.1 **Final Result**

OP-Mode Radio Technology, Operating Frequency	Setup	Date	FCC	IC
Bluetooth LE 1 Mbps, high	S01_AA01	2021-12-06	Passed	Passed
Bluetooth LE 1 Mbps, low	S01_AA01	2021-12-06	Passed	Passed
Bluetooth LE 1 Mbps, mid	S01_AA01	2021-12-06	Passed	Passed

47 CFR CHAPTER I FCC PART 15 Subpart C §15.247 **IC RSS-Gen & IC TRC-43; Ch. 6.7 & Ch. 8**

Occupied Bandwidth (99%)
The measurement was performed according to ANSI C63.10, chapter 6.9.3 **Final Result**

OP-Mode Radio Technology, Operating Frequency	Setup	Date	FCC	IC
Bluetooth LE 1 Mbps, high	S01_AA01	2021-12-06	N/A	Performed
Bluetooth LE 1 Mbps, low	S01_AA01	2021-12-06	N/A	Performed
Bluetooth LE 1 Mbps, mid	S01_AA01	2021-12-06	N/A	Performed

47 CFR CHAPTER I FCC PART 15 Subpart C §15.247 **§ 15.247 (b) (3)**

Peak Power Output
The measurement was performed according to ANSI C63.10, chapter 11.9.1.3 **Final Result**

OP-Mode Radio Technology, Operating Frequency, Measurement method	Setup	Date	FCC	IC
Bluetooth LE 1 Mbps, high, conducted	S01_AA01	2021-12-06	Passed	Passed
Bluetooth LE 1 Mbps, low, conducted	S01_AA01	2021-12-06	Passed	Passed
Bluetooth LE 1 Mbps, mid, conducted	S01_AA01	2021-12-06	Passed	Passed

47 CFR CHAPTER I FCC PART 15 Subpart C §15.247 **§ 15.247 (d)**

Transmitter Spurious Radiated Emissions
The measurement was performed according to ANSI C63.10, chapter 6.4, 6.5, 6.6.5 **Final Result**

OP-Mode Radio Technology, Operating Frequency, Measurement range	Setup	Date	FCC	IC
Bluetooth LE 1 Mbps, high, 1 GHz - 26 GHz	S01_AD01	2021-11-24	Passed	Passed
Bluetooth LE 1 Mbps, high, 30 MHz - 1 GHz	S01_AD01	2021-11-24	Passed	Passed
Bluetooth LE 1 Mbps, low, 1 GHz - 26 GHz	S01_AD01	2021-11-24	Passed	Passed

47 CFR CHAPTER I FCC PART 15 Subpart C §15.247 **§ 15.247 (d)**

Transmitter Spurious Radiated Emissions
The measurement was performed according to ANSI C63.10, chapter 6.4, 6.5, 6.6.5 **Final Result**

OP-Mode Radio Technology, Operating Frequency, Measurement range	Setup	Date	FCC	IC
Bluetooth LE 1 Mbps, low, 30 MHz - 1 GHz	S01_AD01	2021-11-24	Passed	Passed
Bluetooth LE 1 Mbps, mid, 1 GHz - 26 GHz	S01_AD01	2021-11-24	Passed	Passed
Bluetooth LE 1 Mbps, mid, 30 MHz - 1 GHz	S01_AD01	2021-11-24	Passed	Passed
Bluetooth LE 1 Mbps, mid, 9 kHz - 30 MHz	S01_AD01	2021-11-24	Passed	Passed

47 CFR CHAPTER I FCC PART 15 Subpart C §15.247 **§ 15.247 (d)**

Band Edge Compliance Conducted
The measurement was performed according to ANSI C63.10, chapter 11.11 **Final Result**

OP-Mode Radio Technology, Operating Frequency, Band Edge	Setup	Date	FCC	IC
Bluetooth LE 1 Mbps, high, high	S01_AA01	2021-12-06	Passed	Passed
Bluetooth LE 1 Mbps, low, low	S01_AA01	2021-12-06	Passed	Passed

47 CFR CHAPTER I FCC PART 15 Subpart C §15.247 **§ 15.247 (d)**

Band Edge Compliance Radiated
The measurement was performed according to ANSI C63.10, chapter 6.6.5 **Final Result**

OP-Mode Radio Technology, Operating Frequency, Band Edge	Setup	Date	FCC	IC
Bluetooth LE 1 Mbps, high, high	S01_AD01	2021-11-24	Passed	Passed

47 CFR CHAPTER I FCC PART 15 Subpart C §15.247 **§ 15.247 (e)**

Power Density
The measurement was performed according to ANSI C63.10, chapter 11.10.2 **Final Result**

OP-Mode Radio Technology, Operating Frequency	Setup	Date	FCC	IC
Bluetooth LE 1 Mbps, high	S01_AA01	2021-12-06	Passed	Passed
Bluetooth LE 1 Mbps, low	S01_AA01	2021-12-06	Passed	Passed
Bluetooth LE 1 Mbps, mid	S01_AA01	2021-12-06	Passed	Passed

N/A: Not applicable
N/P: Not performed

2 REVISION HISTORY / SIGNATURES

Report version control			
Version	**Release date**	**Change Description**	**Version validity**
initial	2022-03-09	--	valid
--	--	--	--

COMMENT: -

(responsible for accreditation scope)
Dipl.-Ing. Marco Kullik

(responsible for testing and report)
B.Sc. Jens Dörwald

7 layers GmbH, Borsigstr. 11
40880 Ratingen, Germany
Phone +49 (0)2102 749 0

3 ADMINISTRATIVE DATA

3.1 TESTING LABORATORY

Company Name:	7layers GmbH
Address:	Borsigstr. 11 40880 Ratingen Germany

The test facility is accredited by the following accreditation organisation:

Laboratory accreditation no:	DAkkS D-PL-12140-01-01| -02 | -03
FCC Designation Number:	DE0015
FCC Test Firm Registration:	929146
ISED CAB Identifier	DE0007; ISED#: 3699A
Responsible for accreditation scope:	Dipl.-Ing. Marco Kullik
Report Template Version:	2021-09-09

3.2 PROJECT DATA

Responsible for testing and report:	B.Sc. Jens Dörwald
Employees who performed the tests:	documented internally at 7Layers
Date of Report:	2022-03-09
Testing Period:	2021-11-24 to 2022-03-02

3.3 APPLICANT DATA

Company Name:	Continental Automotive GmbH
Address:	Siemensstraße 12 93055 Regensburg Germany
Contact Person:	Mrs. Alexandra Anisoreac

3.4 MANUFACTURER DATA

Company Name:	please see Applicant Data
Address:	
Contact Person:	

4 TEST OBJECT DATA

4.1 GENERAL EUT DESCRIPTION

Kind of Device product description	UWB (Ultra Wide Band) and BLE (Bluetooth Low Energy) transceiver module.
Product name	CMBTRX1
Type	-
Declared EUT data by the supplier	
Voltage Type	DC
Voltage Level	12 V
Antenna / Gain	5.8 dBi
Tested Modulation Type	GFSK
General product description	BLE (Bluetooth Low Energy) transceiver
Specific product description for the EUT	UWB (Ultra Wide Band) and BLE (Bluetooth Low Energy) transceiver module for car access and user localization purposes.
EUT ports (connected cables during testing):	DC
Tested datarates	1 Mbps
Special software used for testing	test software

4.2 EUT MAIN COMPONENTS

Sample Name	**Sample Code**	**Description**
EUT A	DE1439005aa01	conducted sample
Sample Parameter	**Value**	
Serial No.	20212861103	
HW Version	C1	
SW Version	06FF	
Comment	-	

Sample Name	**Sample Code**	**Description**
EUT B	DE1439005ad01	radiated sample
Sample Parameter	**Value**	
Serial No.	20212861002	
HW Version	C1	
SW Version	06FF	
Comment	-	

NOTE:The short description is used to simplify the identification of the EUT in this test report.

4.3 ANCILLARY EQUIPMENT

For the purposes of this test report, ancillary equipment is defined as equipment which is used in conjunction with the EUT to provide operational and control features to the EUT. It is necessary to configure the system in a typical fashion, as a customer would normally use it. But nevertheless Ancillary Equipment can influence the test results.

Device	**Details (Manufacturer, Type Model, OUT Code)**	**Description**
-	-	-

4.4 AUXILIARY EQUIPMENT

For the purposes of this test report, auxiliary equipment is defined as equipment which is used temporarily to enable operational and control features especially used for the tests of the EUT which is not used during normal operation or equipment that is used during the tests in combination with the EUT but is not subject of this test report. It is necessary to configure the system in a typical fashion, as a customer would normally use it.
But nevertheless Auxiliary Equipment can influence the test results.

Device	**Details (Manufacturer, Type Model, HW, SW, S/N)**	**Description**
-	-	-

4.5 EUT SETUPS

This chapter describes the combination of EUTs and equipment used for testing. The rationale for selecting the EUTs, ancillary and auxiliary equipment and interconnecting cables, is to test a representative configuration meeting the requirements of the referenced standards.

Setup	**Combination of EUTs**	**Description and Rationale**
S01_AA01	EUT A	conducted setup
S01_AD01	EUT B	radiated setup

4.6 OPERATING MODES / TEST CHANNELS

This chapter describes the operating modes of the EUTs used for testing.

	2.4 GHz ISM 2400 - 2483.5 MHz		
BT LE Test Channels:	**low**	**mid**	**high**
Channel:	0	20	39
Frequency [MHz]	2402	2442	2480

4.7 PRODUCT LABELLING

4.7.1 FCC ID LABEL

Please refer to the documentation of the applicant.

4.7.2 LOCATION OF THE LABEL ON THE EUT

Please refer to the documentation of the applicant.

5 TEST RESULTS

5.1 OCCUPIED BANDWIDTH (6 DB)

Standard **FCC Part 15 Subpart C**

The test was performed according to:
ANSI C63.10, chapter 11.8.1

5.1.1 TEST DESCRIPTION

The Equipment Under Test (EUT) was set up to perform the occupied bandwidth measurements.
The reference level is the level of the highest amplitude signal observed from the transmitter at either the fundamental frequency or first-order modulation products in all typical modes of operation, including the unmodulated carrier, even if atypical.
The results recorded were measured with the modulation which produce the worst-case (smallest) emission bandwidth.

The EUT was connected to the test system as described in the block diagram below. The complete attenuation of the measurement path is known and considered.

Analyser settings:
- Resolution Bandwidth (RBW): 100 kHz
- Video Bandwidth (VBW): 300 kHz
- Span: Two times nominal bandwidth
- Trace: Maxhold
- Sweeps: Till stable (min. 500, max. 15000)
- Sweeptime: Auto
- Detector: Peak

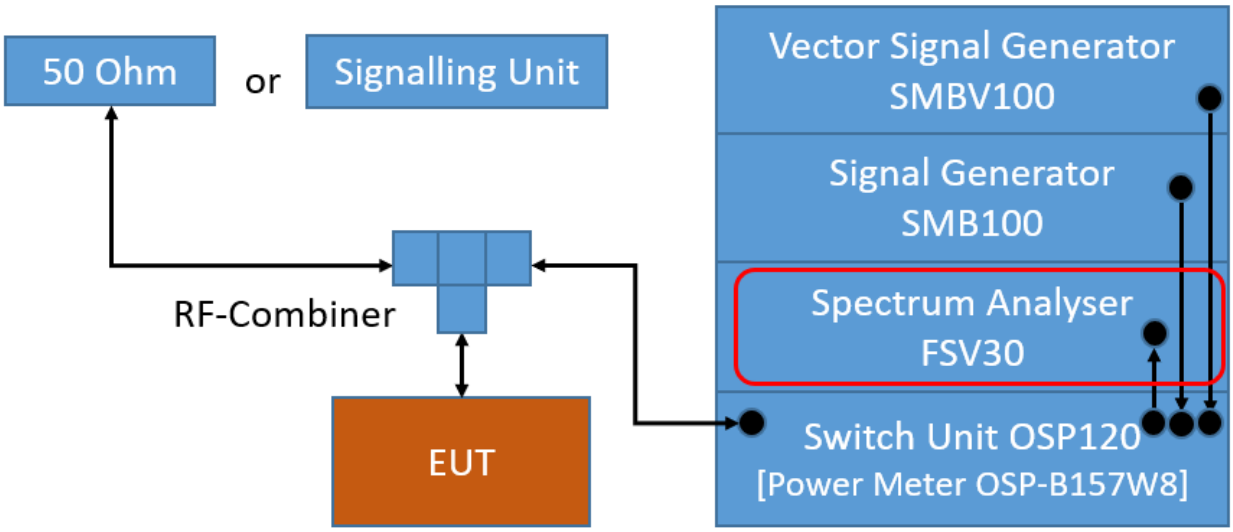

TS8997; Channel Bandwidth

5.1.2 TEST REQUIREMENTS / LIMITS

FCC Part 15, Subpart C, §15.247 (a) (2)
Systems using digital modulation techniques may operate in the 902-928 MHz and 2400-2483.5 MHz bands. The minimum 6 dB bandwidth shall be at least 500 kHz.

5.1.3 TEST PROTOCOL

Ambient temperature: 24 °C
Air Pressure: 1014 hPa
Humidity: 32 %

BT LE 1
Mbit/s

Band / Mode	Channel No.	Frequency [MHz]	6 dB Bandwidth [kHz]	Limit [kHz]	Margin to Limit [kHz]
2.4 GHz ISM	0	2402	792.079	500	292.079
	20	2442	776.237	500	276.237
	39	2480	776.237	500	260.396

Remark: Please see next sub-clause for the measurement plot.

5.1.4 MEASUREMENT PLOT (EXAMPLE PLOT, SHOWING WORST CASE, IF APPLICABLE)

S01_AA01, Channel = 39

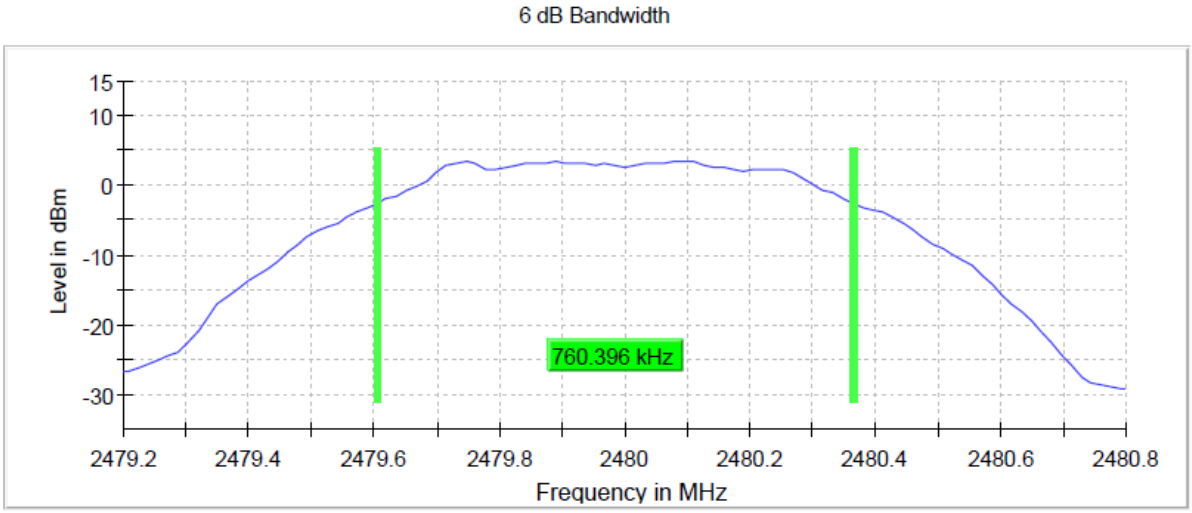

5.1.5 TEST EQUIPMENT USED

- R&S TS8997

5.2 OCCUPIED BANDWIDTH (99%)

Standard **FCC Part 15 Subpart C**

The test was performed according to:
ANSI C63.10, chapter 6.9.3

5.2.1 TEST DESCRIPTION

The Equipment Under Test (EUT) was set up to perform the occupied bandwidth measurements.
The reference level is the level of the highest amplitude signal observed from the transmitter at either the fundamental frequency or first-order modulation products in all typical modes of operation, including the unmodulated carrier, even if atypical.

The EUT was connected to the test system as described in the block diagram below. The complete attenuation of the measurement path is known and considered.

Analyser settings:

- Resolution Bandwidth (RBW): 1 to 5 % of the OBW
- Video Bandwidth (VBW): ≥ 3 times the RBW
- Span: 1.5 to 5 times the OBW
- Trace: Maxhold
- Sweeps: Till stable (min. 500, max. 75000)
- Sweeptime: Auto
- Detector: Peak

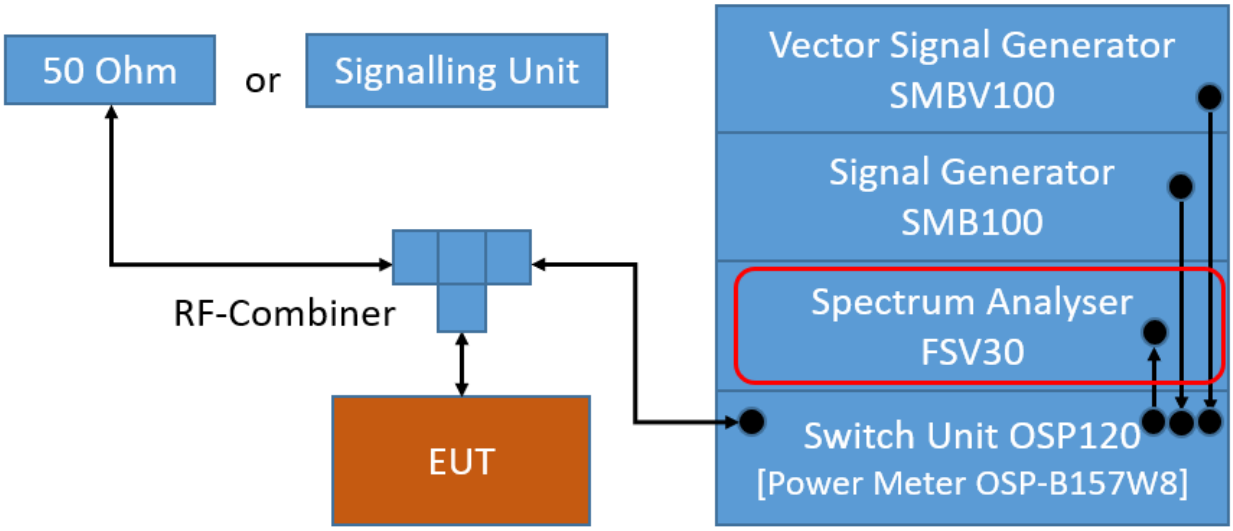

TS8997; Channel Bandwidth

5.2.2 TEST REQUIREMENTS / LIMITS

No applicable limit:

5.2.3 TEST PROTOCOL

Ambient temperature: 24 °C
Air Pressure: 1014 hPa
Humidity: 32 %
BT LE 1 Mbit/s

Band	Channel No.	Frequency [MHz]	99 % Bandwidth [MHz]
2.4 GHz ISM	0	2402	1.020
	20	2442	1.020
	39	2480	1.020

Remark: Please see next sub-clause for the measurement plot.

5.2.4 MEASUREMENT PLOT (EXAMPLE PLOT, SHOWING WORST CASE, IF APPLICABLE)

S01_AA01, Channel = mid

99 % Bandwidth

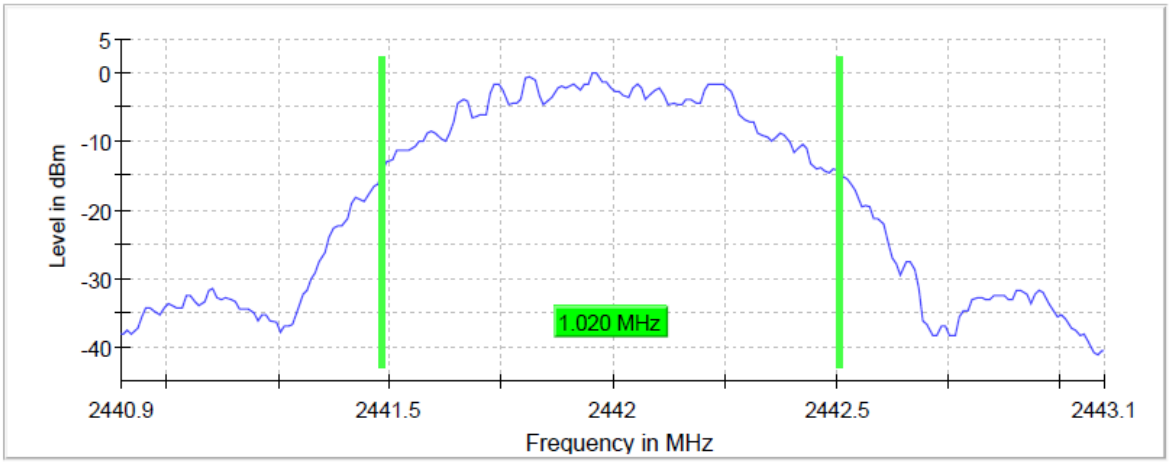

5.2.5 TEST EQUIPMENT USED

- R&S TS8997

5.3 PEAK POWER OUTPUT

Standard **FCC Part 15 Subpart C**

The test was performed according to:
ANSI C63.10, chapter 11.9.1.3

5.3.1 TEST DESCRIPTION

DTS EQUIPMENT:
The Equipment Under Test (EUT) was set up to perform the output power measurements. The results recorded were measured with the modulation which produces the worst-case (highest) output power.

Maximum peak conducted output power (e.g. Bluetooth Low Energy):

The EUT was connected to the test system as described in the block diagram below. The complete attenuation of the measurement path is known and considered.
The reference level of the spectrum analyser was set higher than the output power of the EUT.

Analyser settings:

- Resolution Bandwidth (RBW): ≥ DTS bandwidth
- Video Bandwidth (VBW): ≥ 3 times RBW or maximum of analyzer
- Span: ≥ 3 times RBW
- Trace: Maxhold
- Sweeps: Till stable (min. 300, max. 15000)
- Sweeptime: Auto
- Detector: Peak

Maximum conducted average output power (e.g. WLAN):

The EUT was connected to the test system as described in the block diagram below. The complete attenuation of the measurement path is known and considered.
Measurement is performed using the gated RF average power meter integrated in the OSP 120 module OSP-B157W8 with signal bandwidth >300 MHz.

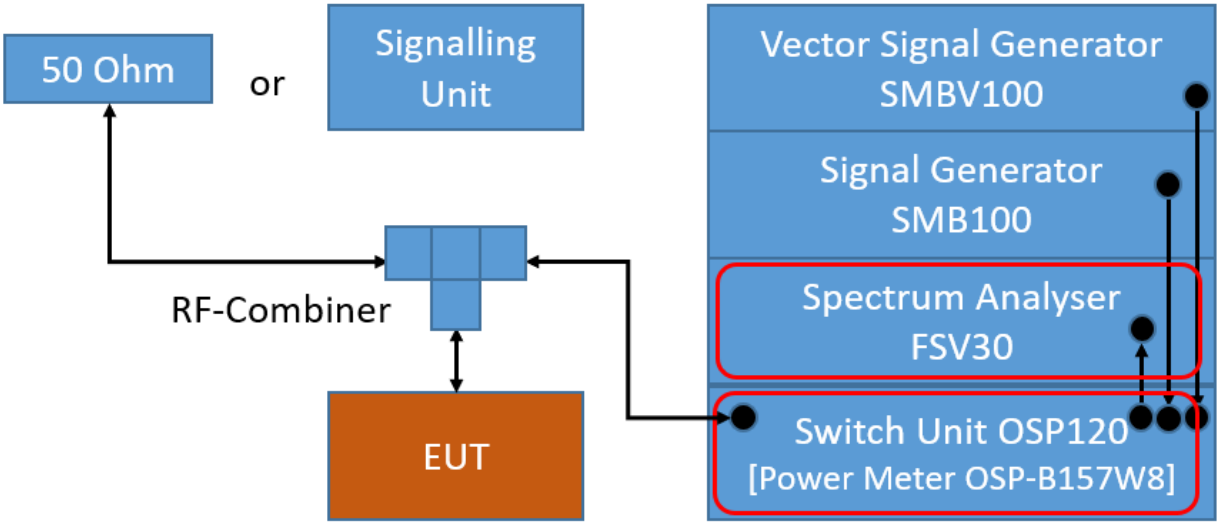

TS8997; Output Power

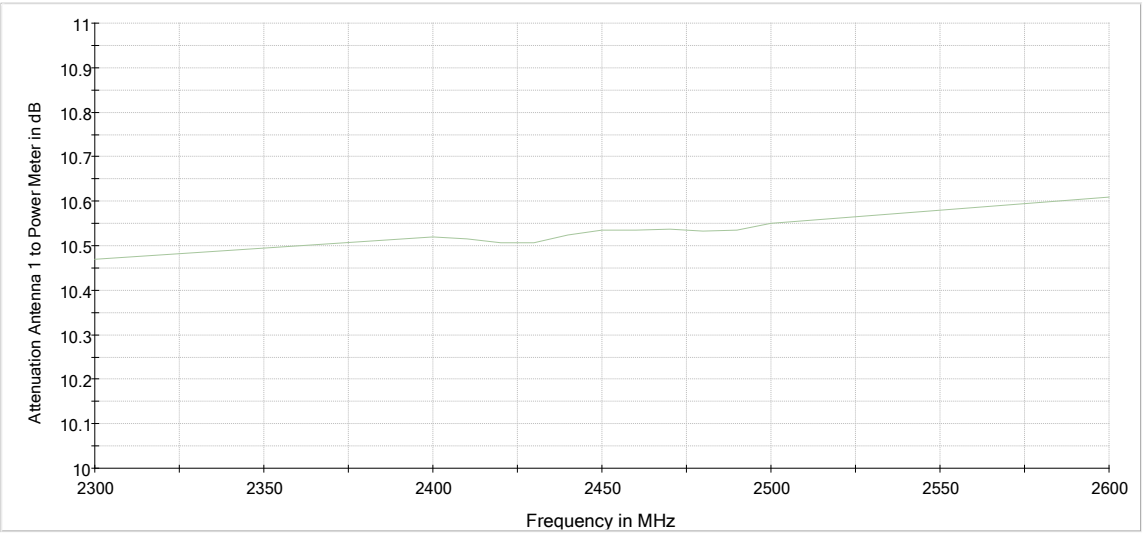

Attenuation of the measurement path to Power Meter

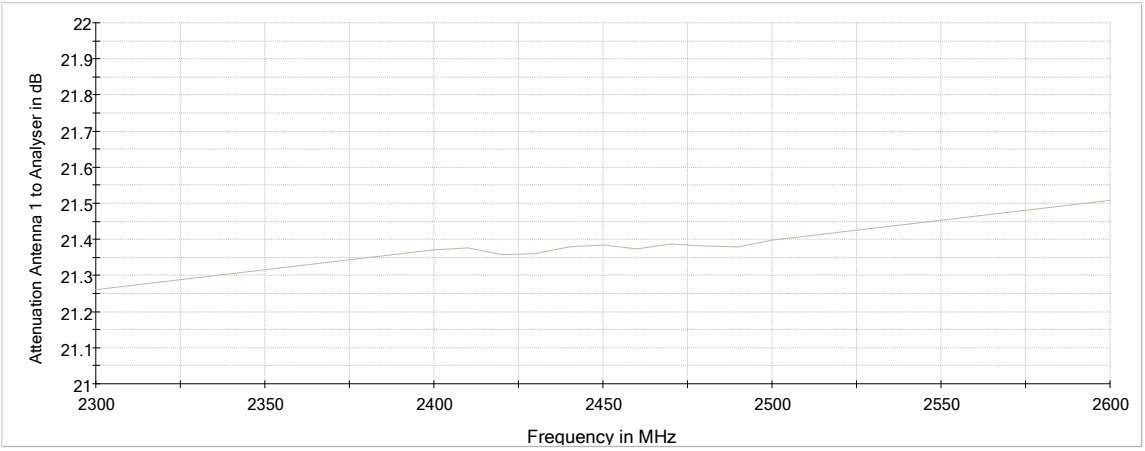

Attenuation of the measurement path to Analyzer

5.3.2 TEST REQUIREMENTS / LIMITS

DTS devices:
FCC Part 15, Subpart C, §15.247 (b) (3)
For systems using digital modulation techniques in the 902-928 MHz, 2400-2483.5 MHz and 5725-5850 MHz bands: 1 watt.

==> Maximum conducted peak output power: 30 dBm (excluding antenna gain, if antennas with directional gains that do not exceed 6 dBi are used).

Frequency Hopping Systems:
FCC Part 15, Subpart C, §15.247 (b) (1)
For frequency hopping systems operating in the 2400-2483.5 MHz band employing at least 75 non-overlapping hopping channels, and all frequency hopping systems in the 5725-5850 MHz band: 1 watt. For all other frequency hopping systems in the 2400-2483.5 MHz band: 0.125 watts.

FCC Part 15, Subpart C, §15.247 (b) (2)
For frequency hopping systems operating in the 902-928 MHz band: 1 watt for systems employing at least 50 hopping channels; and, 0.25 watts for systems employing less than 50 hopping channels, but at least 25 hopping channels, as permitted under paragraph (a)(1)(i) of this section.

Used conversion factor: Limit (dBm) = 10 log (Limit (W)/1mW)

5.3.3 TEST PROTOCOL

Ambient temperature: 24 °C
Air Pressure: 1014 hPa
Humidity: 32 %

BT LE 1 Mbit/s

Band	Channel No.	Frequency [MHz]	Peak Power [dBm]	Limit [dBm]	Margin to Limit [dB]	E.I.R.P [dBm]
2.4 GHz ISM	0	2402	2.6	30.0	27.4	8.4
	20	2442	3.3	30.0	26.7	9.1
	39	2480	2.8	30.0	27.2	8.6

Remark: Please see next sub-clause for the measurement plot.

5.3.4 MEASUREMENT PLOT (EXAMPLE PLOT, SHOWING WORST CASE, IF APPLICABLE)

S01_AA01, Channel = mid
Peak Power

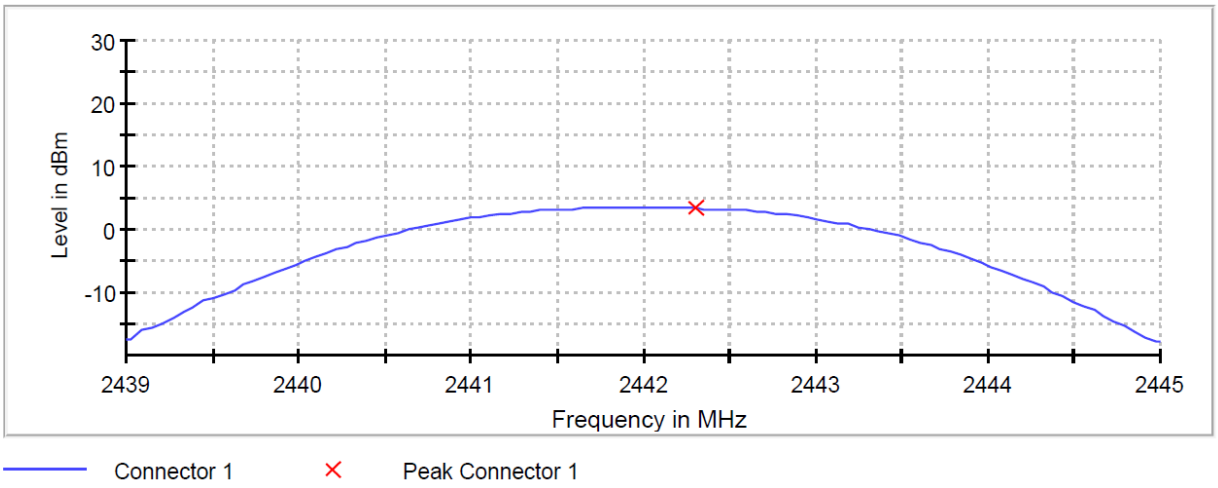

5.3.5 TEST EQUIPMENT USED

- R&S TS8997

5.4 TRANSMITTER SPURIOUS RADIATED EMISSIONS

Standard **FCC Part 15 Subpart C**

The test was performed according to:
ANSI C63.10, chapter 6.4, 6.5, 6.6.5

5.4.1 TEST DESCRIPTION

The test set-up was made in accordance to the general provisions of ANSI C63.10 in a typical installation configuration. The measurements were performed according the following sub-chapters of ANSI C63.10:

- < 30 MHz: Chapter 6.4
- 30 MHz – 1 GHz: Chapter 6.5
- > 1 GHZ: Chapter 6.6 (procedure according 6.6.5 used)

The measurement procedure is implemented into the EMI test software EMC32 from R&S. Exploratory tests are performed at 3 orthogonal axes to determine the worst-case orientation of a body-worn or handheld EUT. The final test on all kind of EUTs is also performed at 3 axes. A pre-check is performed while the EUT is powered.

Below 1 GHz:

The Equipment Under Test (EUT) was set up on a non-conductive table in the semi-anechoic chamber. The influence of the EUT support table that is used between 30–1000 MHz was evaluated.

1. Measurement up to 30 MHz

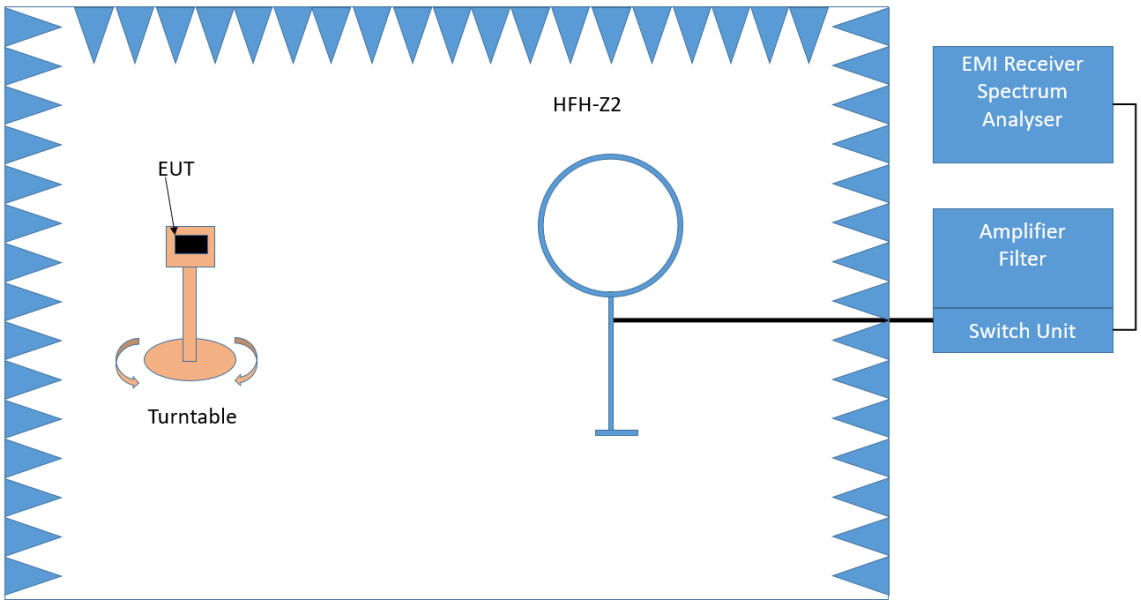

Test Setup; Spurious Emission Radiated (SAC), 9 kHz – 30 MHz

The Loop antenna HFH2-Z2 is used.

Step 1: pre measurement

- Anechoic chamber
- Antenna distance: 3 m
- Antenna height: 1 m
- Detector: Peak-Maxhold
- Frequency range: 0.009 - 0.15 MHz and 0.15 – 30 MHz
- Frequency steps: 0.05 kHz and 2.25 kHz
- IF–Bandwidth: 0.2 kHz and 9 kHz
- Measuring time / Frequency step: 100 ms (FFT-based)

Intention of this step is, to determine the radiated EMI-profile of the EUT. Afterwards the relevant emissions for the final measurement are identified.

Step 2: final measurement

For the relevant emissions determined in step 1, an additional measurement with the following settings will be performed. Intention of this step is to find the maximum emission level.

- Detector: Quasi-Peak (9 kHz – 150 kHz, Peak / Average 150 kHz- 30 MHz)
- Frequency range: 0.009 – 30 MHz
- Frequency steps: measurement at frequencies detected in step 1
- IF–Bandwidth: 0.2 - 10 kHz
- Measuring time / Frequency step: 1 s

2. Measurement above 30 MHz and up to 1 GHz

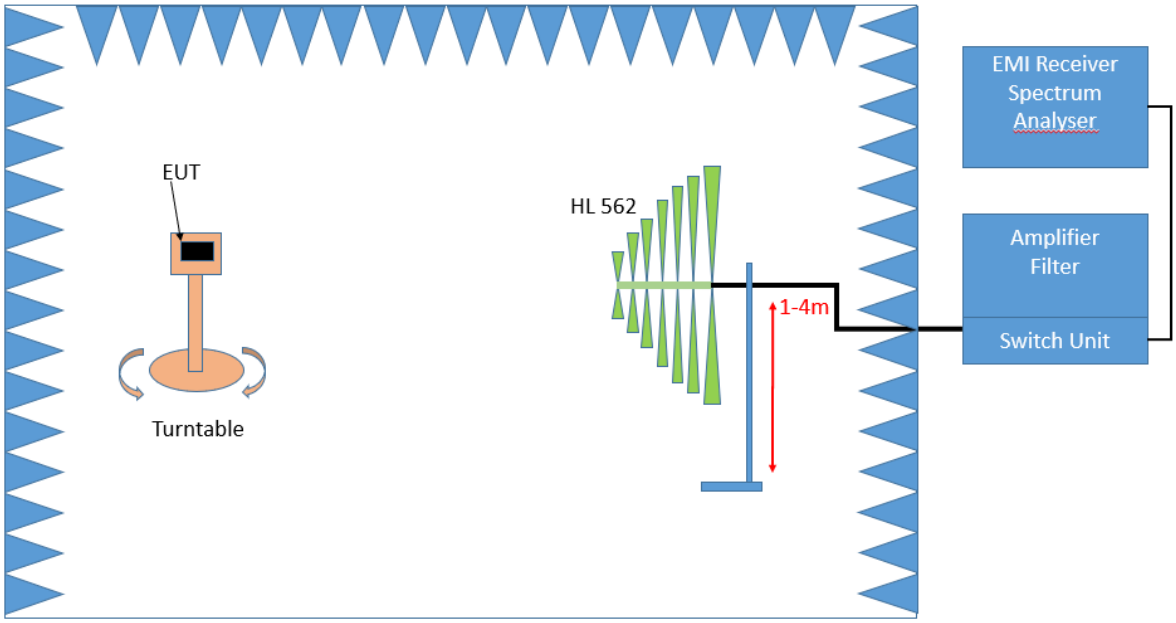

Test Setup; Spurious Emission Radiated (SAC), 30 MHz- 1GHz

Step 1: Preliminary scan

This is a preliminary test to identify the highest amplitudes relative to the limit.
Settings for step 1:
- Antenna distance: 3 m
- Detector: Peak-Maxhold / Quasipeak (FFT-based)
- Frequency range: 30 – 1000 MHz
- Frequency steps: 30 kHz
- IF–Bandwidth: 120 kHz

- Measuring time / Frequency step: 100 ms
- Turntable angle range: –180° to 90°
- Turntable step size: 90°
- Height variation range: 1 – 4 m
- Height variation step size: 1.5 m
- Polarisation: Horizontal + Vertical

Intention of this step is, to determine the radiated EMI-profile of the EUT. Afterwards the relevant emissions for the final measurement are identified.

Step 2: Adjustment measurement

In this step the accuracy of the turntable azimuth and antenna height will be improved. This is necessary to find out the maximum value of every frequency.

For each frequency, which was determined the turntable azimuth and antenna height will be adjusted. The turntable azimuth will slowly vary by ± 45° around this value. During this action, the value of emission is continuously measured. The turntable azimuth at the highest emission will be recorded and adjusted. In this position, the antenna height will also slowly vary by ± 100 cm around the antenna height determined. During this action, the value of emission is also continuously measured. The antenna height of the highest emission will also be recorded and adjusted.

- Detector: Peak – Maxhold
- Measured frequencies: in step 1 determined frequencies
- IF – Bandwidth: 120 kHz
- Measuring time: 100 ms
- Turntable angle range: 360 °
- Height variation range:1 – 4 m
- Antenna Polarisation: max. value determined in step 1

Step 3: Final measurement with QP detector

With the settings determined in step 2, the final measurement will be performed:

EMI receiver settings for step 3:

- Detector: Quasi-Peak (< 1 GHz)
- Measured frequencies: in step 1 determined frequencies
- IF – Bandwidth: 120 kHz
- Measuring time: 1 s

After the measurement a plot will be generated which contains a diagram with the results of the preliminary scan and a chart with the frequencies and values of the results of the final measurement.

Above 1 GHz:

The Equipment Under Test (EUT) was set up on a non-conductive support (tilt device) at 1.5 m height in the fully-anechoic chamber.
All steps were performed with one height (1.5 m) of the receiving antenna only.

3. Measurement above 1 GHz

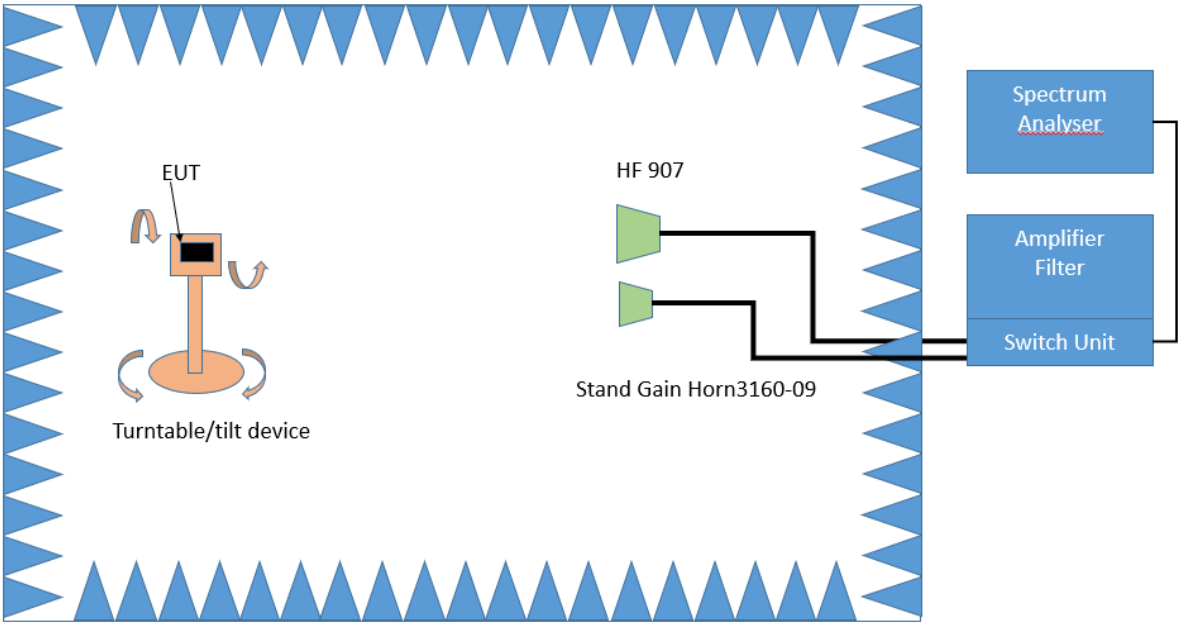

Test Setup; Spurious Emission Radiated (FAC), 1 GHz-26.5 GHz

Step 1:
The EUT is turned during the preliminary measurement across the elevation axis, with a step size of 90 °.
The turn table step size (azimuth angle) for the preliminary measurement is 45 °.
Spectrum analyser settings:
- Detector: Peak, Average
- RBW = 1 MHz
- VBW = 3 MHz

Step 2:
The turn table azimuth will slowly vary by ± 22.5°.
The elevation angle will slowly vary by ± 45°
Spectrum analyser settings:
- Detector: Peak

Step 3:
Spectrum analyser settings for step 3:
- Detector: Peak / CISPR Average
- Measured frequencies: in step 1 determined frequencies
- RBW = 1 MHz
- VBW = 3 MHz
- Measuring time: 1 s

5.4.2 TEST REQUIREMENTS / LIMITS

FCC Part 15, Subpart C, §15.247 (d)
... In addition, radiated emissions which fall in the restricted bands, as defined in Section 15.205(a), must also comply with the radiated emission limits specified in Section 15.209(a) (see Section 15.205(c)).

FCC Part 15, Subpart C, §15.209, Radiated Emission Limits

Frequency in MHz	Limit (µV/m)	Measurement distance (m)	Limits (dBµV/m)
0.009 – 0.49	2400/F(kHz)@300m	3	(48.5 – 13.8)@300m
0.49 – 1.705	24000/F(kHz)@30m	3	(33.8 – 23.0)@30m
1.705 – 30	30@30m	3	29.5@30m

The measured values are corrected with an inverse linear distance extrapolation factor (40 dB/decade) according FCC 15.31 (2).

Frequency in MHz	Limit (µV/m)	Measurement distance (m)	Limits (dBµV/m)
30 – 88	100@3m	3	40.0@3m
88 – 216	150@3m	3	43.5@3m
216 – 960	200@3m	3	46.0@3m
960 - 26000	500@3m	3	54.0@3m
26000 - 40000	500@3m	1	54.0@3m

The measured values above 26 GHz are corrected with an inverse linear distance extrapolation factor (20 dB/decade).

§15.35(b) ..., there is also a limit on the radio frequency emissions, as measured using instrumentation with a peak detector function, corresponding to 20 dB above the maximum permitted average limit....

Used conversion factor: Limit (dBµV/m) = 20 log (Limit (µV/m)/1µV/m)

5.4.3 TEST PROTOCOL

Ambient temperature: 20–28 °C
Air Pressure: 990–1010 hPa
Humidity: 30–40 %

BT LE 1 Mbit/s

Ch. No.	Ch. Center Freq. [MHz]	Spurious Freq. [MHz]	Spurious Level [dBµV/m]	Detec-tor	RBW [kHz]	Limit [dBµV/m]	Margin to Limit [dB]	Limit Type
0	2402	2385.5	59.3	PEAK	1000	74.0	14.7	RB
0	2402	2385.5	34.3	AV	1000	54.0	19.7	RB
20	2442	7325.9	58.0	PEAK	1000	74.0	16.0	RB
20	2442	7325.9	49.1	AV	1000	54.0	4.9	RB
39	2480	2483.5	51.7	PEAK	1000	74.0	22.3	RB
39	2480	2483.7	35.3	AV	1000	54.0	18.7	RB
39	2480	2496.7	59.3	PEAK	1000	74.0	14.7	RB
39	2480	2496.9	34.8	AV	1000	54.0	19.2	RB
39	2480	7439.0	53.1	PEAK	1000	74.0	20.9	RB
39	2480	7439.0	43.8	AV	1000	54.0	10.2	RB

Remark: Please see next sub-clause for the measurement plot.

5.4.4 MEASUREMENT PLOT (EXAMPLE PLOT, SHOWING WORST CASE, IF APPLICABLE)

S01_AD01, Channel = mid
9 kHz – 30 MHz

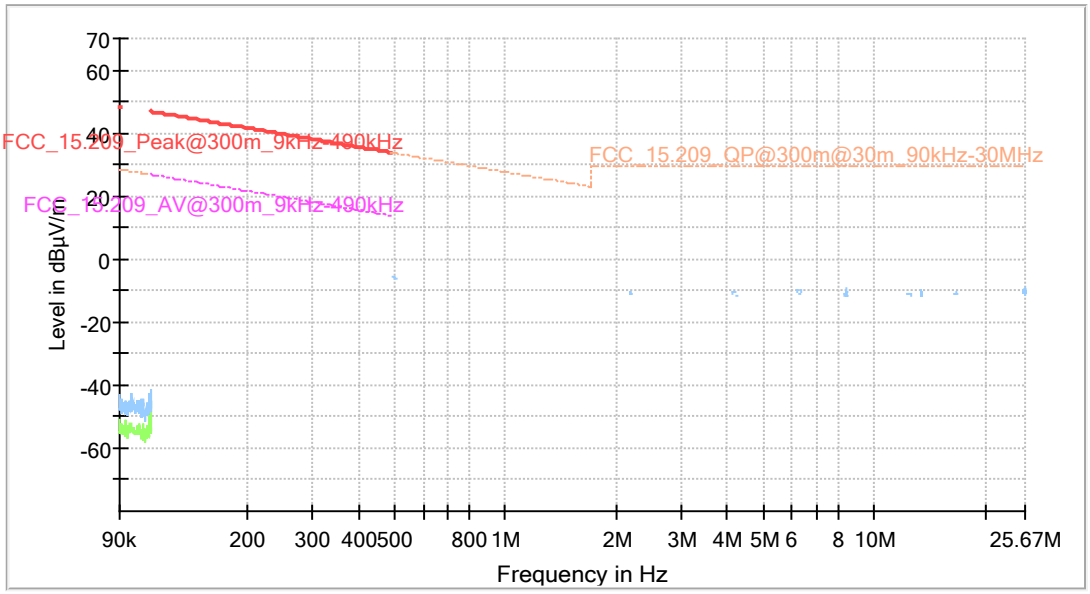

S01_AD01, Channel = mid
30 MHz – 1 GHz

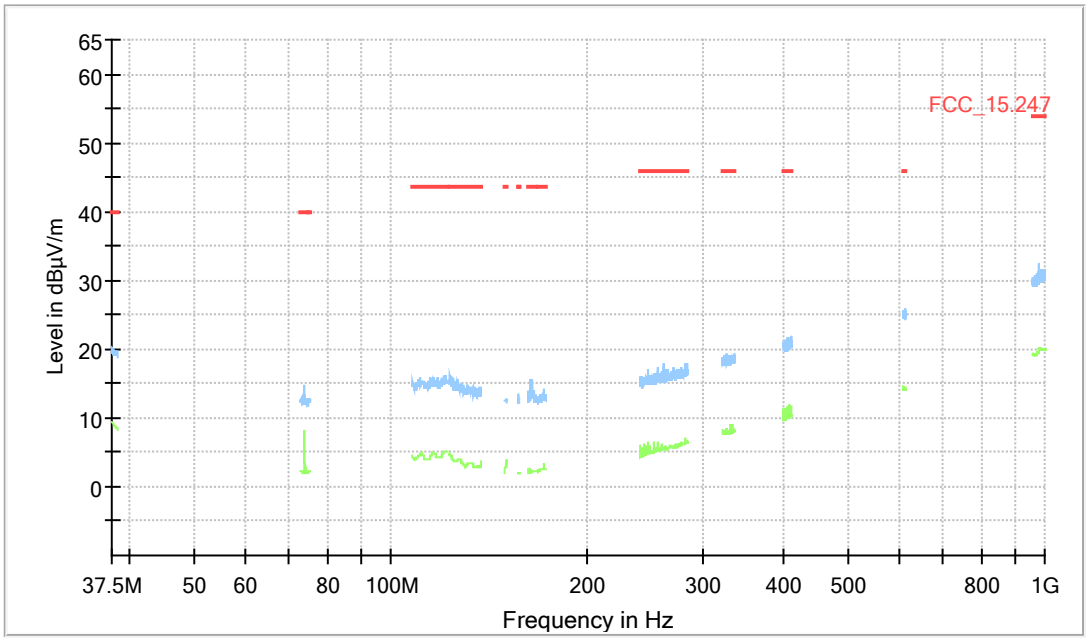

S01_AD01, Channel = mid
1 GHz – 26 GHz

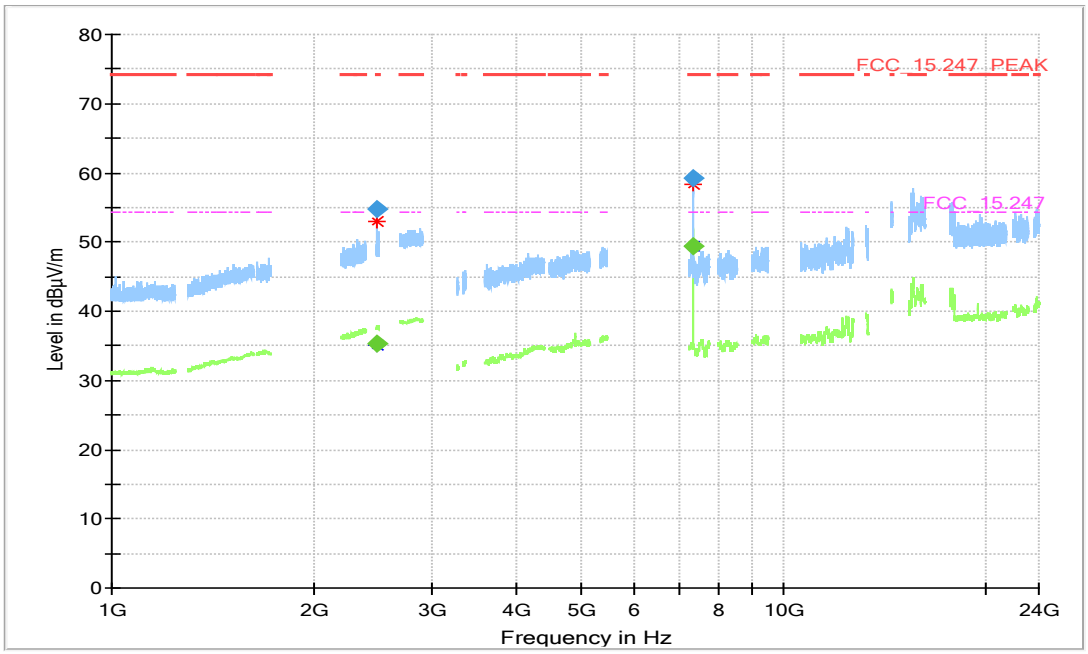

Frequency (MHz)	MaxPeak (dBµV/m)	CAverage (dBµV/m)	Limit (dBµV/m)	Margin (dB)	Meas. Time (ms)	Bandwidth (kHz)	Height (cm)	Pol	Azimuth (deg)	Elevation (deg)	Corr. (dB/m)
2489.688	---	35.1	54.00	18.94	1000.0	1000.000	150.0	V	51.0	84.0	5.3
2489.688	54.6	---	74.00	19.37	1000.0	1000.000	150.0	H	-38.0	0.0	5.3
7325.875	---	49.3	54.00	4.75	1000.0	1000.000	150.0	H	-28.0	84.0	-13.3
7326.500	58.9	---	74.00	15.08	1000.0	1000.000	150.0	H	-29.0	78.0	-13.3

5.4.5 TEST EQUIPMENT USED

- Radiated Emissions SAC H-Field
- Radiated Emissions SAC up to 1 GHz
- Radiated Emissions FAR 2.4 GHz FCC

5.5 BAND EDGE COMPLIANCE CONDUCTED

Standard **FCC Part 15 Subpart C**

The test was performed according to:
ANSI C63.10, chapter 11.11

5.5.1 TEST DESCRIPTION

For the conducted measurement, the Equipment Under Test (EUT) is placed in a shielded room. The reference power was measured in the test case "Spurious RF Conducted Emissions".

The EUT was connected to the test system as described in the block diagram below. The complete attenuation of the measurement path is known and considered.

Analyser settings:

- Lower Band Edge:
  Measured range: 2310.0 MHz to 2483.5 MHz
  Upper Band Edge
  Measured range: 2400.0 MHz to 2500 MHz
- Detector: Peak
- Resolution Bandwidth (RBW): 100 kHz
- Video Bandwidth (VBW): 300 kHz
- Sweeptime: Auto
- Sweeps: Till stable (min. 300, max. 15000)
- Trace: Maxhold

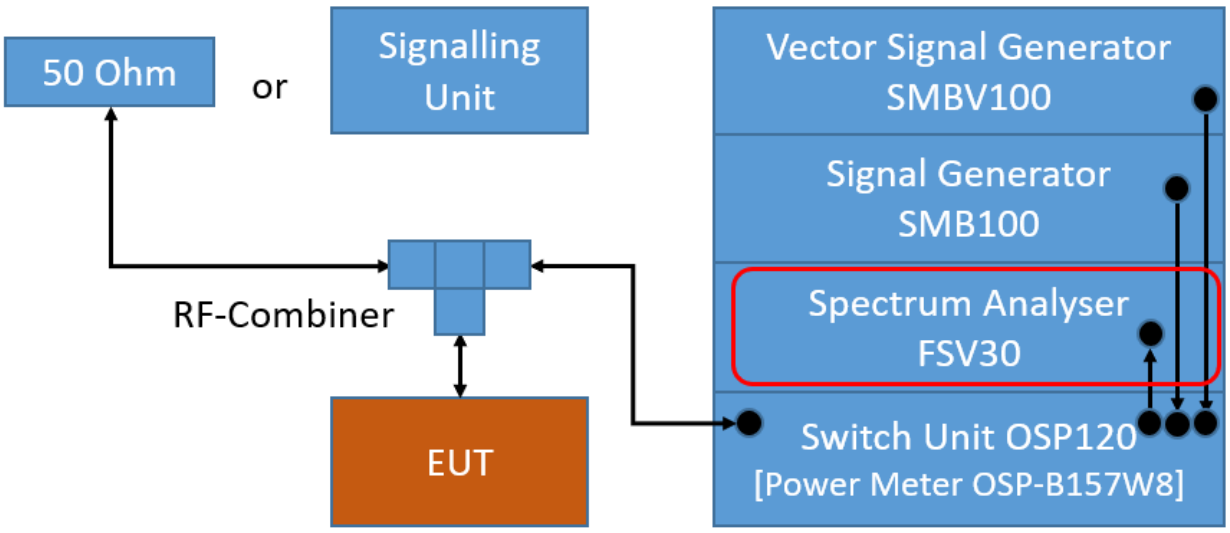

TS8997; Band Edge Conducted

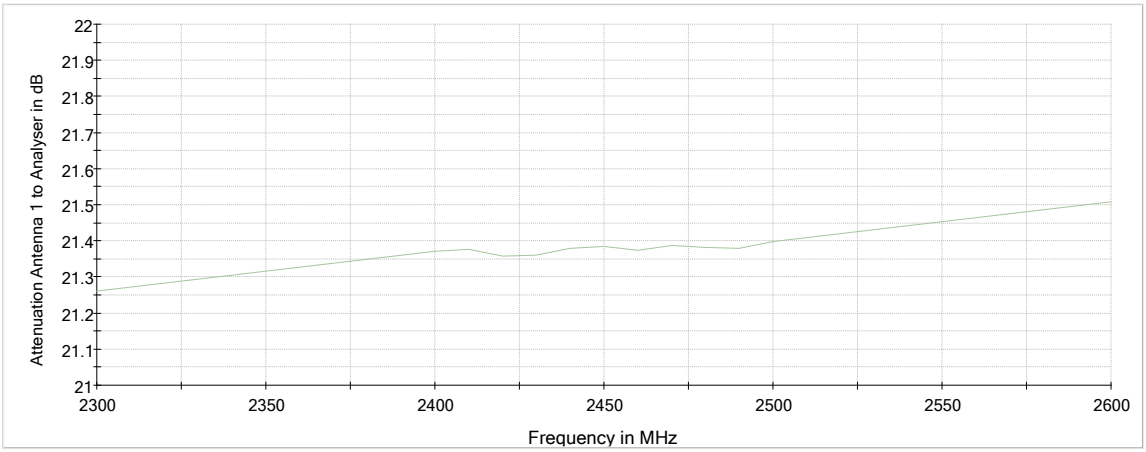

Attenuation of the measurement path

5.5.2 TEST REQUIREMENTS / LIMITS

FCC Part 15.247 (d)
"In any 100 kHz bandwidth outside the frequency band in which the spread spectrum or digitally modulated intentional radiator is operating, the radio frequency power that is produced by the intentional radiator shall be at least 20 dB below that in the 100 kHz bandwidth within the band that contains the highest level of the desired power, based on either an RF conducted or a radiated measurement, provided the transmitter demonstrates compliance with the peak conducted power limits. ...
If the transmitter complies with the conducted power limits based on the use of RMS averaging over a time interval, as permitted under paragraph (b)(3) of this section, the attenuation required under this paragraph shall be 30 dB instead of 20 dB. Attenuation below the general limits specified in Section 15.209(a) is not required. In addition, radiated emissions which fall in the restricted bands, as defined in Section 15.205(a), must also comply with the radiated emission limits specified in Section 15.209(a) (see Section 15.205(c))."

For the conducted measurement the RF power at the band edge shall be "at least 20 dB below that in the 100 kHz bandwidth within the band that contains the highest level of the desired power..."

5.5.3 TEST PROTOCOL

Ambient temperature: 24 °C
Air Pressure: 1014 hPa
Humidity: 32 %
BT LE 1 Mbit/s

Channel No.	Channel Center Frequency [MHz]	Band Edge Freq. [MHz]	Spurious Level [dBm]	Detector	RBW [kHz]	Ref. Level [dBm]	Limit [dBm]	Margin to Limit [dB]
0	2402	2400.0	-47.1	PEAK	100	8.1	-11.9	35.2
39	2480	2483.5	-47.2	PEAK	100	8.3	-11.7	35.5

Remark: Please see next sub-clause for the measurement plot.

5.5.4 MEASUREMENT PLOT (EXAMPLE PLOT, SHOWING WORST CASE, IF APPLICABLE)

S01_AA01, Channel = low

Band Edge

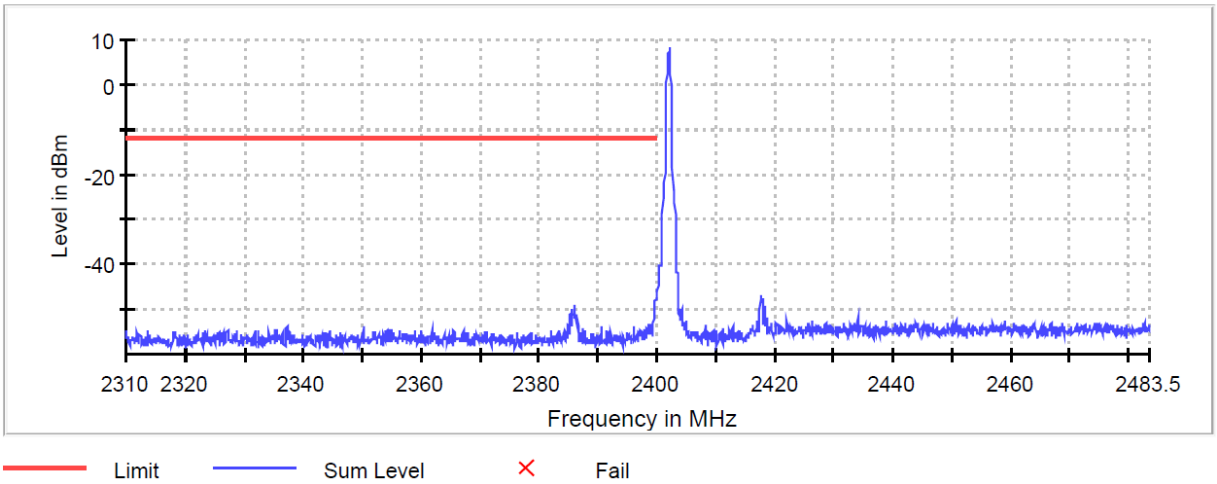

5.5.5 TEST EQUIPMENT USED

- R&S TS8997

5.6 BAND EDGE COMPLIANCE RADIATED

Standard **FCC Part 15 Subpart C**

The test was performed according to:
ANSI C63.10, chapter 6.6.5

5.6.1 TEST DESCRIPTION

The test set-up was made in accordance to the general provisions of ANSI C63.10 in a typical installation configuration. The measurements were performed according the following sub-chapter of ANSI C63.10:

- Chapter 6.10.5

The Equipment Under Test (EUT) was set up on a non-conductive support (tilt device) at 1.5 m height in the fully-anechoic chamber.
All steps were performed with one height (1.5 m) of the receiving antenna only (procedure according ANSI C63.10, chapter 6.6.5.

3. Measurement above 1 GHz

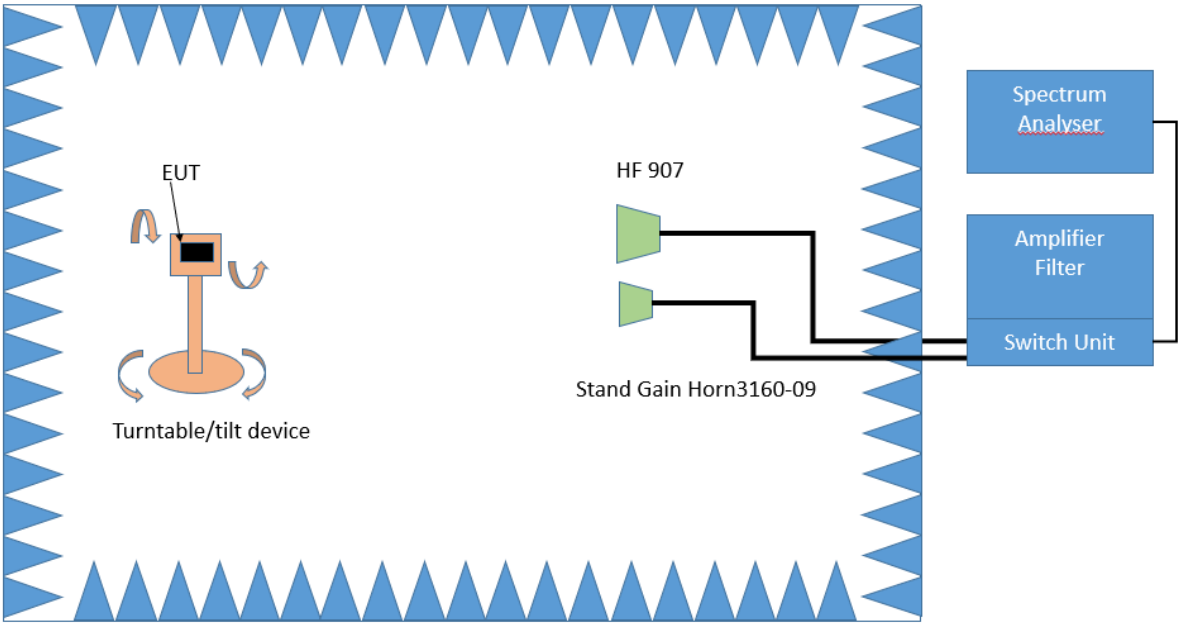

Test Setup; Spurious Emission Radiated (FAC), 1 GHz-26.5 GHz

Step 1:
The EUT is turned during the preliminary measurement across the elevation axis, with a step size of 90 °.
The turn table step size (azimuth angle) for the preliminary measurement is 45 °.
Spectrum analyser settings:
- Detector: Peak, Average
- RBW = 1 MHz
- VBW = 3 MHz

Step 2:
The turn table azimuth will slowly vary by ± 22.5°.
The elevation angle will slowly vary by ± 45°
Spectrum analyser settings:
- Detector: Peak

Step 3:
Spectrum analyser settings for step 3:
- Detector: Peak / CISPR Average
- Measured frequencies: in step 1 determined frequencies
- RBW = 1 MHz
- VBW = 3 MHz
- Measuring time: 1 s

5.6.2 TEST REQUIREMENTS / LIMITS

For band edges connected to a restricted band, the limits are specified in Section 15.209(a)

FCC Part 15, Subpart C, §15.209, Radiated Emission Limits

Frequency in MHz	Limit (µV/m)	Measurement distance (m)	Limits (dBµV/m)
0.009 – 0.49	2400/F(kHz)@300m	3	(48.5 – 13.8)@300m
0.49 – 1.705	24000/F(kHz)@30m	3	(33.8 – 23.0)@30m
1.705 – 30	30@30m	3	29.5@30m

The measured values are corrected with an inverse linear distance extrapolation factor (40 dB/decade) according FCC 15.31 (2).

Frequency in MHz	Limit (µV/m)	Measurement distance (m)	Limits (dBµV/m)
30 – 88	100@3m	3	40.0@3m
88 – 216	150@3m	3	43.5@3m
216 – 960	200@3m	3	46.0@3m
960 - 26000	500@3m	3	54.0@3m
26000 - 40000	500@3m	1	54.0@3m

The measured values above 26 GHz are corrected with an inverse linear distance extrapolation factor (20 dB/decade).

§15.35(b) ..., there is also a limit on the radio frequency emissions, as measured using instrumentation with a peak detector function, corresponding to 20 dB above the maximum permitted average limit....

Used conversion factor: Limit (dBµV/m) = 20 log (Limit (µV/m)/1µV/m)

5.6.3 TEST PROTOCOL

Ambient temperature: 20–28 °C
Air Pressure: 990–1010 hPa
Humidity: 30–40 %

BT LE 1 Mbit/s

Ch. No.	Ch. Center Freq. [MHz]	Band Edge Freq. [MHz]	Spurious Level [dBµV/m]	Detec-tor	RBW [kHz]	Limit [dBµV/m]	Margin to Limit [dB]
39	2480	2483.5	51.7	PEAK	1000	74.0	22.3
39	2480	2483.5	35.3	AV	1000	54.0	18.7

Remark: Please see next sub-clause for the measurement plot.

COMMENT:
For the "lower band edge" (nearest, lower restricted band to the 2.4 GHz ISM band) the measurement values are reported in section 5.4 "TRANSMITTER SPURIOUS RADIATED EMISSIONS" in case that the margin to the compliance limit is less than 20 dB.

5.6.4 MEASUREMENT PLOT (EXAMPLE PLOT, SHOWING WORST CASE, IF APPLICABLE)

S01_AD01, Channel = high

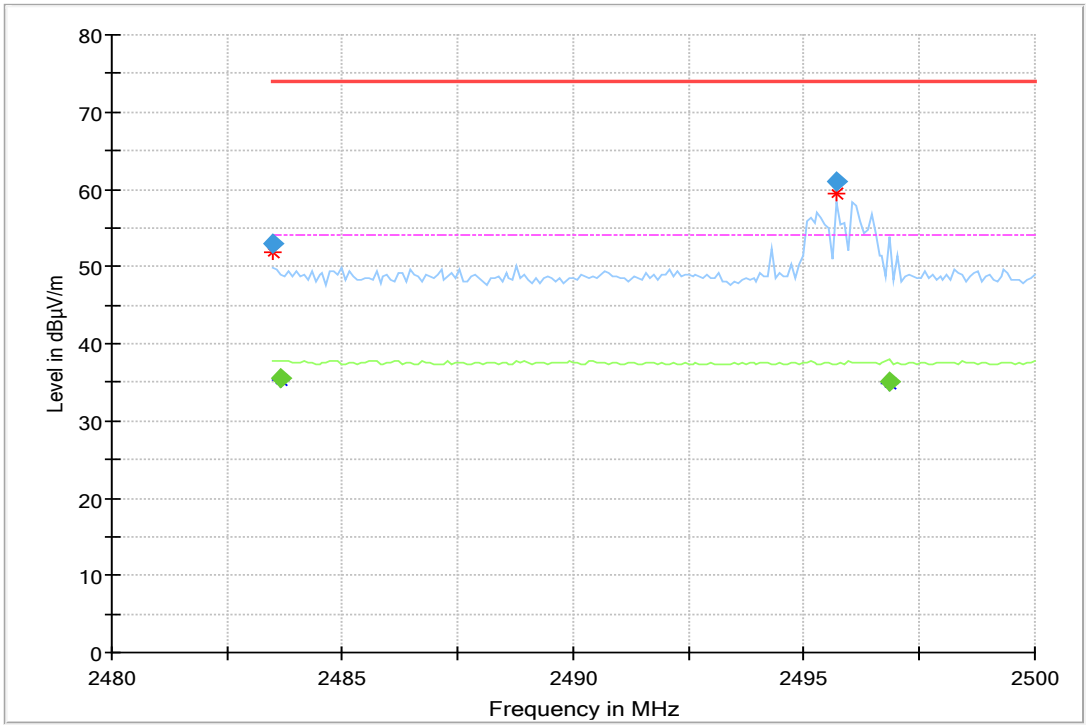

Frequency (MHz)	MaxPeak (dBµV/m)	CAverage (dBµV/m)	Limit (dBµV/m)	Margin (dB)	Meas. Time (ms)	Bandwidth (kHz)	Height (cm)	Pol	Azimuth (deg)	Elevation (deg)	Corr. (dB/m)
2483.500	52.9	---	74.00	21.06	1000.0	1000.000	150.0	H	38.0	88.0	5.3
2483.665	---	35.4	54.00	18.56	1000.0	1000.000	150.0	H	53.0	78.0	5.3
2495.710	61.0	---	74.00	12.98	1000.0	1000.000	150.0	H	52.0	-6.0	5.4
2496.865	---	35.0	54.00	19.02	1000.0	1000.000	150.0	H	-34.0	105.0	5.4

5.6.5 TEST EQUIPMENT USED

- Radiated Emissions FAR 2.4 GHz FCC

5.7 POWER DENSITY

Standard **FCC Part 15 Subpart C**

The test was performed according to:
ANSI C63.10, chapter 11.9.1.3

5.7.1 TEST DESCRIPTION

The Equipment Under Test (EUT) was set up in a shielded room to perform the Power Density measurements.
The results recorded were measured with the modulation which produces the worst-case (highest) power density.

The EUT was connected to the test system as described in the block diagram below. The complete attenuation of the measurement path is known and considered.

Maximum Peak Power Spectral Density (e.g. Bluetooth low energy):

Analyser settings:
- Resolution Bandwidth (RBW): 100 kHz, 10 kHz or 3 kHz
- Video Bandwidth (VBW): ≥ 3 times RBW
- Trace: Maxhold
- Sweeps: Till stable (min. 200, max. 15000)
- Sweeptime: Auto
- Detector: Peak

Maximum Average Power Spectral Density (e.g. WLAN):

Analyser settings:
- Resolution Bandwidth (RBW): 100 kHz, 10 kHz or 3 kHz
- Video Bandwidth (VBW): ≥ 3 times RBW
- Sweep Points: ≥ 2 times span / RBW
- Trace: Maxhold
- Sweeps: Till stable (max. 150)
- Sweeptime: ≤ Number of Sweep Points x minimum transmission duration
- Detector: RMS

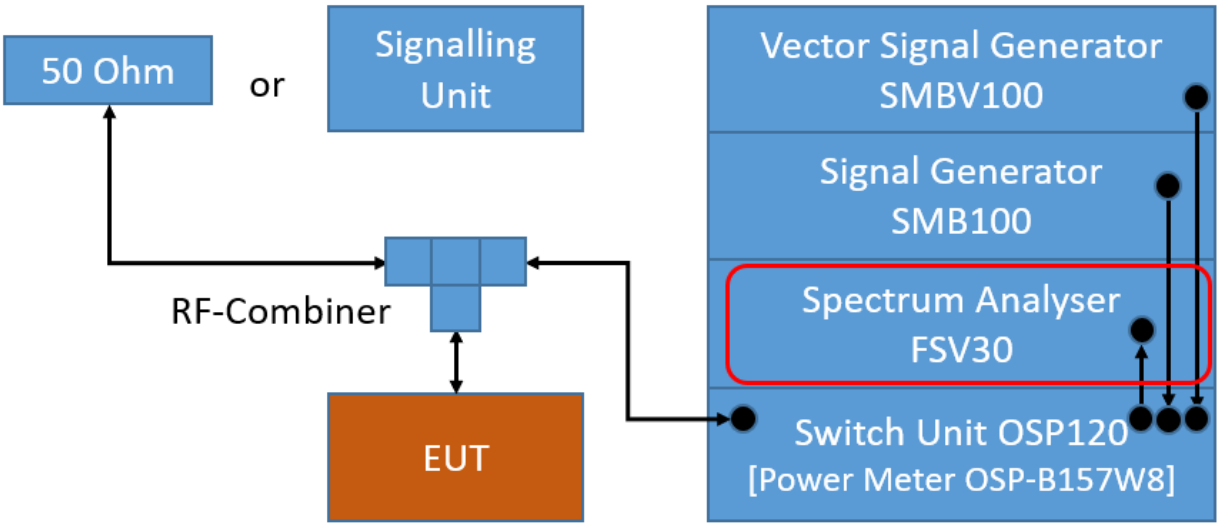

TS8997; Power Spectral Density

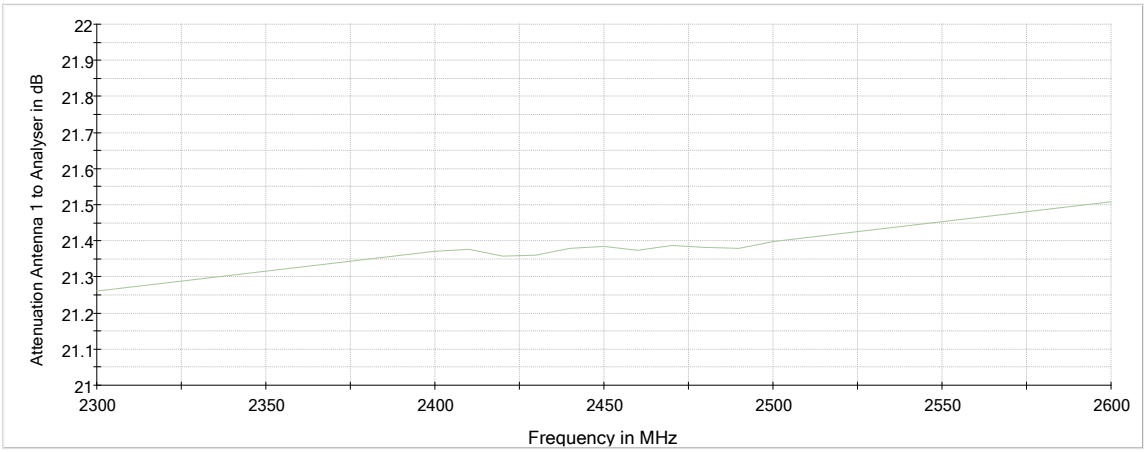

Attenuation of the measurement path

5.7.2 TEST REQUIREMENTS / LIMITS

FCC Part 15, Subpart C, §15.247 (e)

For digitally modulated systems, the peak power spectral density conducted from the intentional radiator to the antenna shall not be greater than 8 dBm in any 3 kHz band during any time interval of continuous transmission.
…
The same method of determining the conducted output power shall be used to determine the power spectral density.

FCC Part 15, Subpart C, §15.247 (f)

(f) For the purposes of this section, hybrid systems are those that employ a combination of both frequency hopping and digital modulation techniques.
…
The power spectral density conducted from the intentional radiator to the antenna due to the digital modulation operation of the hybrid system, with the frequency hopping operation turned off, shall not be greater than 8 dBm in any 3 kHz band during any time interval of continuous transmission

5.7.3 TEST PROTOCOL

Ambient temperature: 24 °C
Air Pressure: 1014 hPa
Humidity: 32 %

BT LE 1 Mbit/s

Band	Channel No.	Frequency [MHz]	Power Density [dBm / RBW]	RBW [kHz]	Limit [dBm/3kHz]	Margin to Limit [dB]
2.4 GHz ISM	0	2402	-6.3	10.0	8.0	14.3
	20	2442	-5.6	10.0	8.0	13.6
	39	2480	-6.1	10.0	8.0	14.1

Remark: Please see next sub-clause for the measurement plot.

5.7.4 MEASUREMENT PLOT (EXAMPLE PLOT, SHOWING WORST CASE, IF APPLICABLE)

S01_AA01, Channel = mid

Peak Power Spectral Density

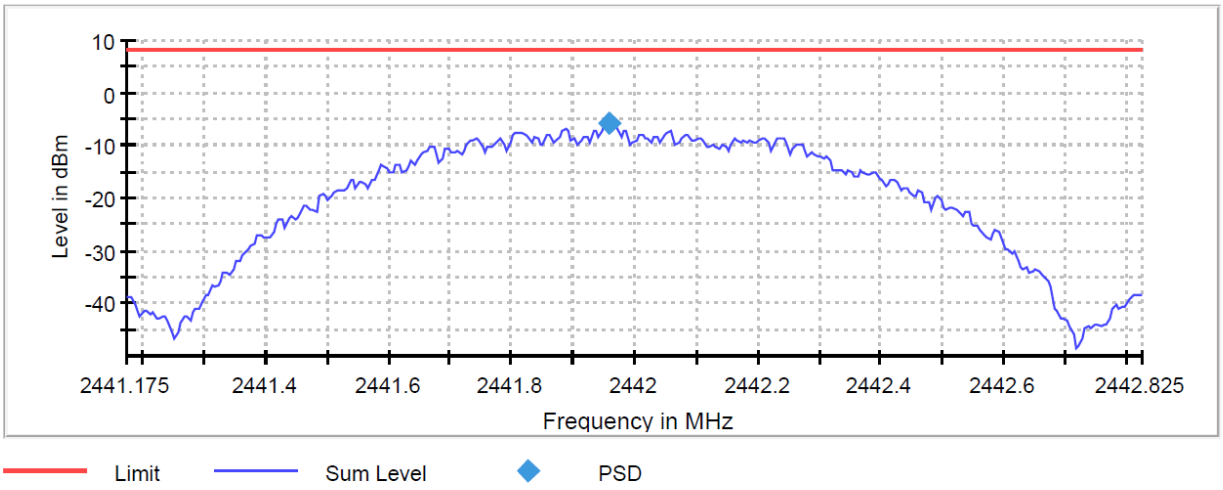

5.7.5 TEST EQUIPMENT USED

- R&S TS8997

6 TEST EQUIPMENT

1 R&S TS8997
2.4 and 5 GHz Bands Conducted Test Lab

Ref.No.	Device Name	Description	Manufacturer	Serial Number	Last Calibration	Calibration Due
1.1	MFS	Rubidium Frequency Normal MFS	Datum GmbH	002	2021-11	2022-11
1.2	Opus10 TPR (8253.00)	T/P Logger 13	Lufft Mess- und Regeltechnik GmbH	13936	2021-10	2023-10
1.3	SMB100A	Signal Generator 9 kHz - 6 GHz	Rohde & Schwarz	107695	2021-06	2024-06
1.4	EX520	Digital Multimeter 12	Extech Instruments Corp	05157876		
1.5	NGSM 32/10	Power Supply	Rohde & Schwarz GmbH & Co. KG	3456	2020-01	2022-01
1.6	Temperature Chamber VT 4002	Temperature Chamber Vötsch 03	Vötsch	58566002150010	2020-05	2022-05
1.7	FSW43	Signal analyser	Rohde & Schwarz GmbH & Co. KG	102013	2021-06	2023-06
1.8	Opus10 THI (8152.00)	T/H Logger 14	Lufft Mess- und Regeltechnik GmbH	13993	2021-08	2023-08
1.9	SMBV100A	Vector Signal Generator 9 kHz - 6 GHz	Rohde & Schwarz	259291	2019-11	2022-11
1.10	OSP120	Contains Power Meter and Switching Unit OSP-B157W8	Rohde & Schwarz	101158	2021-08	2024-08

2 Radiated Emissions FAR 2.4 GHz FCC
Radiated emission tests for 2.4 GHz ISM devices in a fully anechoic room

Ref.No.	Device Name	Description	Manufacturer	Serial Number	Last Calibration	Calibration Due
2.1	Opus10 TPR (8253.00)	T/P Logger 13	Lufft Mess- und Regeltechnik GmbH	13936	2021-10	2023-10
2.2	AMF-7D00101800-30-10P-R	Broadband Amplifier 100 MHz - 18 GHz	Miteq			
2.3	Anechoic Chamber 03	FAR, 8.80m x 4.60m x 4.05m (l x w x h)	Albatross Projects	P26971-647-001-PRB	2021-04	2023-04
2.4	JS4-18002600-32-5P	Broadband Amplifier 18 GHz - 26 GHz	Miteq	849785		
2.5	FSW 43	Spectrum Analyzer	Rohde & Schwarz	103779	2021-06	2023-06
2.6	3160-09	Standard Gain / Pyramidal Horn Antenna 26.5 GHz	EMCO Elektronic GmbH	00083069		
2.7	WHKX 7.0/18G-8SS	High Pass Filter	Wainwright Instruments GmbH	09		

Ref.No.	Device Name	Description	Manufacturer	Serial Number	Last Calibration	Calibration Due
2.8	TT 1.5 WI	Turn Table	Maturo GmbH	-		
2.9	5HC3500/18000-1.2-KK	High Pass Filter	Trilithic	200035008		
2.10	Opus 20 THI (8120.00)	ThermoHygro Datalogger	Lufft Mess- und Regeltechnik GmbH	115.0318.0802.033	2020-10	2022-10
2.11	TD1.5-10kg	EUT Tilt Device (Rohacell)	Maturo GmbH	TD1.5-10kg/024/3790709		
2.12	PAS 2.5 - 10 kg	Antenna Mast	Maturo GmbH	-		
2.13	AFS42-00101800-25-S-42	Broadband Amplifier 25 MHz - 18 GHz	Miteq	2035324		
2.14	HF 907	Double-ridged horn	Rohde & Schwarz	102444	2021-09	2024-09

3 Radiated Emissions SAC H-Field
Radiated emission tests in the H-Field in a semi anechoic room

Ref.No.	Device Name	Description	Manufacturer	Serial Number	Last Calibration	Calibration Due
3.1	Opus10 TPR (8253.00)	T/P Logger 13	Lufft Mess- und Regeltechnik GmbH	13936	2021-10	2023-10
3.2	ESW44	EMI Receiver / Spectrum Analyzer	Rohde & Schwarz GmbH & Co. KG	101603	2022-01	2024-01
3.3	Anechoic Chamber 01	SAC/FAR, 10.58 m x 6.38 m x 6.00 m	Frankonia	none		
3.4	Opus10 THI (8152.00)	T/H Logger 10	Lufft Mess- und Regeltechnik GmbH	12488	2021-08	2023-08
3.5	DS 420S	Turn Table 2 m diameter	HD GmbH	420/573/99		
3.6	HFH2-Z2	Loop Antenna + 3 Axis Tripod	Rohde & Schwarz GmbH & Co. KG	829324/006	2021-01	2024-01

4 Radiated Emissions SAC up to 1 GHz
Radiated emission tests up to 1 GHz in a semi anechoic room

Ref.No.	Device Name	Description	Manufacturer	Serial Number	Last Calibration	Calibration Due
4.1	Opus10 TPR (8253.00)	T/P Logger 13	Lufft Mess- und Regeltechnik GmbH	13936	2021-10	2023-10
4.2	ESW44	EMI Receiver / Spectrum Analyzer	Rohde & Schwarz GmbH & Co. KG	101603	2022-01	2024-01
4.3	Anechoic Chamber 01	SAC/FAR, 10.58 m x 6.38 m x 6.00 m	Frankonia	none		
4.4	HL 562 ULTRALOG	Biconical-log-per antenna (30 MHz - 3 GHz) with HL 562E biconicals	Rohde & Schwarz GmbH & Co. KG	830547/003	2021-09	2024-09

Ref.No.	Device Name	Description	Manufacturer	Serial Number	Last Calibration	Calibration Due
4.5	Opus10 THI (8152.00)	T/H Logger 10	Lufft Mess- und Regeltechnik GmbH	12488	2021-08	2023-08
4.6	DS 420S	Turn Table 2 m diameter	HD GmbH	420/573/99		
4.7	AM 4.0	Antenna Mast 4 m	Maturo GmbH	AM4.0/180/1192 0513		

The calibration interval is the time interval between “Last Calibration” and “Calibration Due”

7 ANTENNA FACTORS, CABLE LOSS AND SAMPLE CALCULATIONS

This chapter contains the antenna factors with their corresponding path loss of the used measurement path for all antennas as well as the insertion loss of the LISN.

7.1 LISN R&S ESH3-Z5 (150 KHZ – 30 MHZ)

Frequency		Corr.	LISN insertion loss ESH3-Z5	cable loss (incl. 10 dB atten-uator)
MHz		dB	dB	dB
0.15		10.1	0.1	10.0
5		10.3	0.1	10.2
7		10.5	0.2	10.3
10		10.5	0.2	10.3
12		10.7	0.3	10.4
14		10.7	0.3	10.4
16		10.8	0.4	10.4
18		10.9	0.4	10.5
20		10.9	0.4	10.5
22		11.1	0.5	10.6
24		11.1	0.5	10.6
26		11.2	0.5	10.7
28		11.2	0.5	10.7
30		11.3	0.5	10.8

Sample calculation

U_{LISN} (dB µV) = U (dB µV) + Corr. (dB)
U = Receiver reading
LISN Insertion loss = Voltage Division Factor of LISN
Corr. = sum of single correction factors of used LISN, cables, switch units (if used)
Linear interpolation will be used for frequencies in between the values in the table.

7.2 ANTENNA R&S HFH2-Z2 (9 KHZ – 30 MHZ)

Frequency	AF HFH-Z2)	Corr.	cable loss 1 (inside chamber)	cable loss 2 (outside chamber)	cable loss 3 (switch unit)	cable loss 4 (to receiver)	distance corr. (-40 dB/ decade)	d_{Limit} (meas. distance (limit)	d_{used} (meas. distance (used)
MHz	dB (1/m)	dB	dB	dB	dB	dB	dB	m	m
0.009	20.50	-79.6	0.1	0.1	0.1	0.1	-80	300	3
0.01	20.45	-79.6	0.1	0.1	0.1	0.1	-80	300	3
0.015	20.37	-79.6	0.1	0.1	0.1	0.1	-80	300	3
0.02	20.36	-79.6	0.1	0.1	0.1	0.1	-80	300	3
0.025	20.38	-79.6	0.1	0.1	0.1	0.1	-80	300	3
0.03	20.32	-79.6	0.1	0.1	0.1	0.1	-80	300	3
0.05	20.35	-79.6	0.1	0.1	0.1	0.1	-80	300	3
0.08	20.30	-79.6	0.1	0.1	0.1	0.1	-80	300	3
0.1	20.20	-79.6	0.1	0.1	0.1	0.1	-80	300	3
0.2	20.17	-79.6	0.1	0.1	0.1	0.1	-80	300	3
0.3	20.14	-79.6	0.1	0.1	0.1	0.1	-80	300	3
0.49	20.12	-79.6	0.1	0.1	0.1	0.1	-80	300	3
0.490001	20.12	-39.6	0.1	0.1	0.1	0.1	-40	30	3
0.5	20.11	-39.6	0.1	0.1	0.1	0.1	-40	30	3
0.8	20.10	-39.6	0.1	0.1	0.1	0.1	-40	30	3
1	20.09	-39.6	0.1	0.1	0.1	0.1	-40	30	3
2	20.08	-39.6	0.1	0.1	0.1	0.1	-40	30	3
3	20.06	-39.6	0.1	0.1	0.1	0.1	-40	30	3
4	20.05	-39.5	0.2	0.1	0.1	0.1	-40	30	3
5	20.05	-39.5	0.2	0.1	0.1	0.1	-40	30	3
6	20.02	-39.5	0.2	0.1	0.1	0.1	-40	30	3
8	19.95	-39.5	0.2	0.1	0.1	0.1	-40	30	3
10	19.83	-39.4	0.2	0.1	0.2	0.1	-40	30	3
12	19.71	-39.4	0.2	0.1	0.2	0.1	-40	30	3
14	19.54	-39.4	0.2	0.1	0.2	0.1	-40	30	3
16	19.53	-39.3	0.3	0.1	0.2	0.1	-40	30	3
18	19.50	-39.3	0.3	0.1	0.2	0.1	-40	30	3
20	19.57	-39.3	0.3	0.1	0.2	0.1	-40	30	3
22	19.61	-39.3	0.3	0.1	0.2	0.1	-40	30	3
24	19.61	-39.3	0.3	0.1	0.2	0.1	-40	30	3
26	19.54	-39.3	0.3	0.1	0.2	0.1	-40	30	3
28	19.46	-39.2	0.3	0.1	0.3	0.1	-40	30	3
30	19.73	-39.1	0.4	0.1	0.3	0.1	-40	30	3

Sample calculation

E (dB µV/m) = U (dB µV) + AF (dB 1/m) + Corr. (dB)
U = Receiver reading
AF = Antenna factor
Corr. = sum of single correction factors of used cables, switch unit, distance correction, amplifier (if applicable)
distance correction = -40 * LOG (d_{Limit}/ d_{used})
Linear interpolation will be used for frequencies in between the values in the table.
Table shows an extract of values

7.3 ANTENNA R&S HL562 (30 MHZ – 1 GHZ)

(d_{Limit} = 3 m)

Frequency	AF R&S HL562	Corr.	cable loss 1 (inside chamber)	cable loss 2 (outside chamber)	cable loss 3 (switch unit)	cable loss 4 (to receiver)	distance corr. (-20 dB/ decade)	d_{Limit} (meas. distance (limit)	d_{used} (meas. distance (used)
MHz	dB (1/m)	dB	dB	dB	dB	dB	dB	m	m
30	18.6	0.6	0.29	0.04	0.23	0.02	0.0	3	3
50	6.0	0.9	0.39	0.09	0.32	0.08	0.0	3	3
100	9.7	1.2	0.56	0.14	0.47	0.08	0.0	3	3
150	7.9	1.6	0.73	0.20	0.59	0.12	0.0	3	3
200	7.6	1.9	0.84	0.21	0.70	0.11	0.0	3	3
250	9.5	2.1	0.98	0.24	0.80	0.13	0.0	3	3
300	11.0	2.3	1.04	0.26	0.89	0.15	0.0	3	3
350	12.4	2.6	1.18	0.31	0.96	0.13	0.0	3	3
400	13.6	2.9	1.28	0.35	1.03	0.19	0.0	3	3
450	14.7	3.1	1.39	0.38	1.11	0.22	0.0	3	3
500	15.6	3.2	1.44	0.39	1.20	0.19	0.0	3	3
550	16.3	3.5	1.55	0.46	1.24	0.23	0.0	3	3
600	17.2	3.5	1.59	0.43	1.29	0.23	0.0	3	3
650	18.1	3.6	1.67	0.34	1.35	0.22	0.0	3	3
700	18.5	3.6	1.67	0.42	1.41	0.15	0.0	3	3
750	19.1	4.1	1.87	0.54	1.46	0.25	0.0	3	3
800	19.6	4.1	1.90	0.46	1.51	0.25	0.0	3	3
850	20.1	4.4	1.99	0.60	1.56	0.27	0.0	3	3
900	20.8	4.7	2.14	0.60	1.63	0.29	0.0	3	3
950	21.1	4.8	2.22	0.60	1.66	0.33	0.0	3	3
1000	21.6	4.9	2.23	0.61	1.71	0.30	0.0	3	3

(d_{Limit} = 10 m)

30	18.6	-9.9	0.29	0.04	0.23	0.02	-10.5	10	3
50	6.0	-9.6	0.39	0.09	0.32	0.08	-10.5	10	3
100	9.7	-9.2	0.56	0.14	0.47	0.08	-10.5	10	3
150	7.9	-8.8	0.73	0.20	0.59	0.12	-10.5	10	3
200	7.6	-8.6	0.84	0.21	0.70	0.11	-10.5	10	3
250	9.5	-8.3	0.98	0.24	0.80	0.13	-10.5	10	3
300	11.0	-8.1	1.04	0.26	0.89	0.15	-10.5	10	3
350	12.4	-7.9	1.18	0.31	0.96	0.13	-10.5	10	3
400	13.6	-7.6	1.28	0.35	1.03	0.19	-10.5	10	3
450	14.7	-7.4	1.39	0.38	1.11	0.22	-10.5	10	3
500	15.6	-7.2	1.44	0.39	1.20	0.19	-10.5	10	3
550	16.3	-7.0	1.55	0.46	1.24	0.23	-10.5	10	3
600	17.2	-6.9	1.59	0.43	1.29	0.23	-10.5	10	3
650	18.1	-6.9	1.67	0.34	1.35	0.22	-10.5	10	3
700	18.5	-6.8	1.67	0.42	1.41	0.15	-10.5	10	3
750	19.1	-6.3	1.87	0.54	1.46	0.25	-10.5	10	3
800	19.6	-6.3	1.90	0.46	1.51	0.25	-10.5	10	3
850	20.1	-6.0	1.99	0.60	1.56	0.27	-10.5	10	3
900	20.8	-5.8	2.14	0.60	1.63	0.29	-10.5	10	3
950	21.1	-5.6	2.22	0.60	1.66	0.33	-10.5	10	3
1000	21.6	-5.6	2.23	0.61	1.71	0.30	-10.5	10	3

Sample calculation

E (dB µV/m) = U (dB µV) + AF (dB 1/m) + Corr. (dB)
U = Receiver reading
AF = Antenna factor
Corr. = sum of single correction factors of used cables, switch unit, distance correction, amplifier (if applicable)
distance correction = -20 * LOG (d_{Limit}/ d_{used})
Linear interpolation will be used for frequencies in between the values in the table.
Tables show an extract of values.

7.4 ANTENNA R&S HF907 (1 GHZ – 18 GHZ)

Frequency	AF R&S HF907	Corr.	cable loss 1 (relay + cable inside chamber)	cable loss 2 (outside chamber)	cable loss 3 (switch unit, atten-uator & pre-amp)	cable loss 4 (to receiver)		
MHz	dB (1/m)	dB	dB	dB	dB	dB		
1000	24.4	-19.4	0.99	0.31	-21.51	0.79		
2000	28.5	-17.4	1.44	0.44	-20.63	1.38		
3000	31.0	-16.1	1.87	0.53	-19.85	1.33		
4000	33.1	-14.7	2.41	0.67	-19.13	1.31		
5000	34.4	-13.7	2.78	0.86	-18.71	1.40		
6000	34.7	-12.7	2.74	0.90	-17.83	1.47		
7000	35.6	-11.0	2.82	0.86	-16.19	1.46		

Frequency	AF R&S HF907	Corr.	cable loss 1 (relay inside chamber)	cable loss 2 (inside chamber)	cable loss 3 (outside chamber)	cable loss 4 (switch unit, atten-uator & pre-amp)	cable loss 5 (to receiver)	used for FCC 15.247
MHz	dB (1/m)	dB	dB	dB	dB	dB	dB	
3000	31.0	-23.4	0.47	1.87	0.53	-27.58	1.33	
4000	33.1	-23.3	0.56	2.41	0.67	-28.23	1.31	
5000	34.4	-21.7	0.61	2.78	0.86	-27.35	1.40	
6000	34.7	-21.2	0.58	2.74	0.90	-26.89	1.47	
7000	35.6	-19.8	0.66	2.82	0.86	-25.58	1.46	

Frequency	AF R&S HF907	Corr.	cable loss 1 (relay inside chamber)	cable loss 2 (High Pass)	cable loss 3 (pre-amp)	cable loss 4 (inside chamber)	cable loss 5 (outside chamber)	cable loss 6 (to receiver)
MHz	dB (1/m)	dB	dB	dB	dB	dB	dB	dB
7000	35.6	-57.3	0.56	1.28	-62.72	2.66	0.94	1.46
8000	36.3	-56.3	0.69	0.71	-61.49	2.84	1.00	1.53
9000	37.1	-55.3	0.68	0.65	-60.80	3.06	1.09	1.60
10000	37.5	-56.2	0.70	0.54	-61.91	3.28	1.20	1.67
11000	37.5	-55.3	0.80	0.61	-61.40	3.43	1.27	1.70
12000	37.6	-53.7	0.84	0.42	-59.70	3.53	1.26	1.73
13000	38.2	-53.5	0.83	0.44	-59.81	3.75	1.32	1.83
14000	39.9	-56.3	0.91	0.53	-63.03	3.91	1.40	1.77
15000	40.9	-54.1	0.98	0.54	-61.05	4.02	1.44	1.83
16000	41.3	-54.1	1.23	0.49	-61.51	4.17	1.51	1.85
17000	42.8	-54.4	1.36	0.76	-62.36	4.34	1.53	2.00
18000	44.2	-54.7	1.70	0.53	-62.88	4.41	1.55	1.91

Sample calculation

E (dB µV/m) = U (dB µV) + AF (dB 1/m) + Corr. (dB)
U = Receiver reading
AF = Antenna factor
Corr. = sum of single correction factors of used cables, switch unit, distance correction, amplifier (if applicable)
Linear interpolation will be used for frequencies in between the values in the table.
Tables show an extract of values.

7.5 ANTENNA EMCO 3160-09 (18 GHZ – 26.5 GHZ)

Frequency	AF EMCO 3160-09	Corr.	cable loss 1 (inside chamber)	cable loss 2 (pre-amp)	cable loss 3 (inside chamber)	cable loss 4 (switch unit)	cable loss 5 (to receiver)
MHz	dB (1/m)	dB	dB	dB	dB	dB	dB
18000	40.2	-23.5	0.72	-35.85	6.20	2.81	2.65
18500	40.2	-23.2	0.69	-35.71	6.46	2.76	2.59
19000	40.2	-22.0	0.76	-35.44	6.69	3.15	2.79
19500	40.3	-21.3	0.74	-35.07	7.04	3.11	2.91
20000	40.3	-20.3	0.72	-34.49	7.30	3.07	3.05
20500	40.3	-19.9	0.78	-34.46	7.48	3.12	3.15
21000	40.3	-19.1	0.87	-34.07	7.61	3.20	3.33
21500	40.3	-19.1	0.90	-33.96	7.47	3.28	3.19
22000	40.3	-18.7	0.89	-33.57	7.34	3.35	3.28
22500	40.4	-19.0	0.87	-33.66	7.06	3.75	2.94
23000	40.4	-19.5	0.88	-33.75	6.92	3.77	2.70
23500	40.4	-19.3	0.90	-33.35	6.99	3.52	2.66
24000	40.4	-19.8	0.88	-33.99	6.88	3.88	2.58
24500	40.4	-19.5	0.91	-33.89	7.01	3.93	2.51
25000	40.4	-19.3	0.88	-33.00	6.72	3.96	2.14
25500	40.5	-20.4	0.89	-34.07	6.90	3.66	2.22
26000	40.5	-21.3	0.86	-35.11	7.02	3.69	2.28
26500	40.5	-21.1	0.90	-35.20	7.15	3.91	2.36

Sample calculation

E (dB µV/m) = U (dB µV) + AF (dB 1/m) + Corr. (dB)
U = Receiver reading
AF = Antenna factor
Corr. = sum of single correction factors of used cables, switch unit, distance correction, amplifier (if applicable)
Linear interpolation will be used for frequencies in between the values in the table.
Table shows an extract of values.

7.6 ANTENNA EMCO 3160-10 (26.5 GHZ – 40 GHZ)

Frequency	AF EMCO 3160-10	Corr.	cable loss 1 (inside chamber)	cable loss 2 (outside chamber)	cable loss 3 (switch unit)	cable loss 4 (to receiver)	distance corr. (-20 dB/ decade)	d_{Limit} (meas. distance (limit)	d_{used} (meas. distance (used)
GHz	dB (1/m)	dB	dB	dB	dB	dB	dB	m	m
26.5	43.4	-11.2	4.4				-9.5	3	1.0
27.0	43.4	-11.2	4.4				-9.5	3	1.0
28.0	43.4	-11.1	4.5				-9.5	3	1.0
29.0	43.5	-11.0	4.6				-9.5	3	1.0
30.0	43.5	-10.9	4.7				-9.5	3	1.0
31.0	43.5	-10.8	4.7				-9.5	3	1.0
32.0	43.5	-10.7	4.8				-9.5	3	1.0
33.0	43.6	-10.7	4.9				-9.5	3	1.0
34.0	43.6	-10.6	5.0				-9.5	3	1.0
35.0	43.6	-10.5	5.1				-9.5	3	1.0
36.0	43.6	-10.4	5.1				-9.5	3	1.0
37.0	43.7	-10.3	5.2				-9.5	3	1.0
38.0	43.7	-10.2	5.3				-9.5	3	1.0
39.0	43.7	-10.2	5.4				-9.5	3	1.0
40.0	43.8	-10.1	5.5				-9.5	3	1.0

Sample calculation

E (dB µV/m) = U (dB µV) + AF (dB 1/m) + Corr. (dB)
U = Receiver reading
AF = Antenna factor
Corr. = sum of single correction factors of used cables, switch unit, distance correction, amplifier (if applicable)
Linear interpolation will be used for frequencies in between the values in the table.
distance correction = -20 * LOG (d_{Limit}/ d_{used})
Linear interpolation will be used for frequencies in between the values in the table.
Table shows an extract of values.

8 MEASUREMENT UNCERTAINTIES

Test Case	Parameter	Uncertainty
AC Power Line	Power	± 3.4 dB
Field Strength of spurious radiation	Power	± 5.5 dB
6 dB / 26 dB / 99% Bandwidth	Power Frequency	± 2.9 dB ± 11.2 kHz
Conducted Output Power	Power	± 2.2 dB
Band Edge Compliance	Power Frequency	± 2.2 dB ± 11.2 kHz
Frequency Stability	Frequency	± 25 Hz
Power Spectral Density	Power	± 2.2 dB

The measurement uncertainties for all parameters are calculated with an expansion factor (coverage factor) k = 1.96. This means, that the true value is in the corresponding interval with a probability of 95 %.

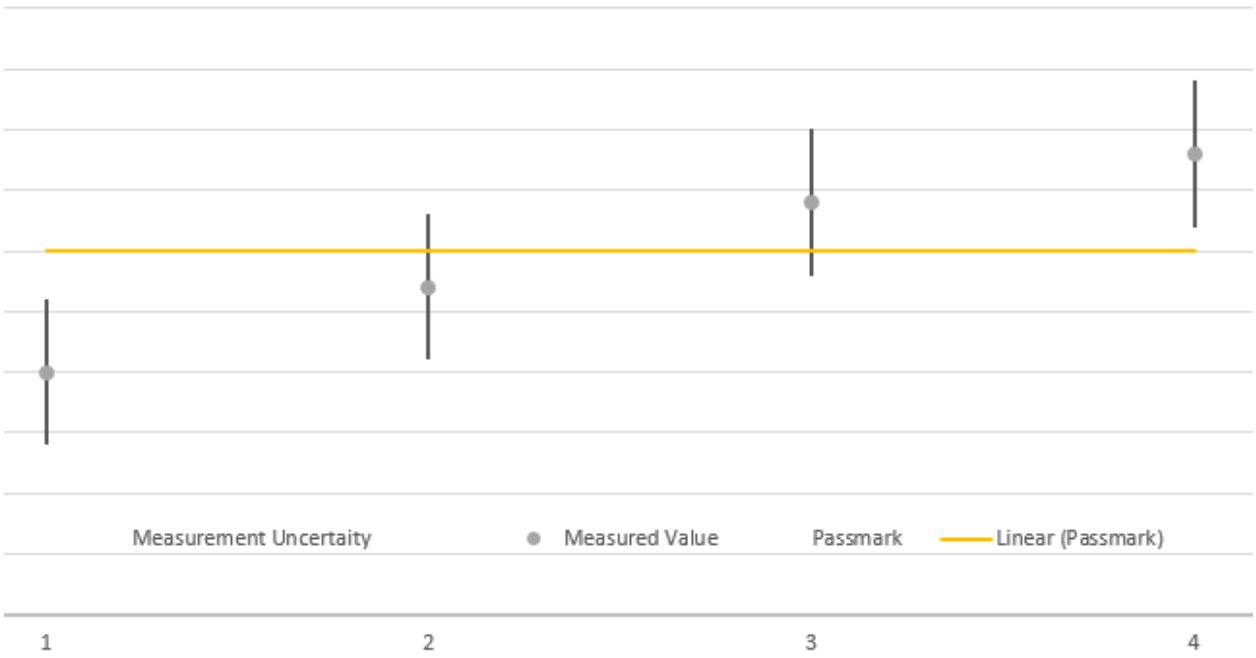

The verdicts in this test report are given according the above diagram:

Case	Measured Value	Uncertainty Range	Verdict
1	below pass mark	below pass mark	Passed
2	below pass mark	within pass mark	Passed
3	above pass mark	within pass mark	Failed
4	above pass mark	above pass mark	Failed

That means, the laboratory applies, as decision rule (see ISO/IEC 17025:2017), the so called shared risk principle.

9 PHOTO REPORT

Please see separate photo report.