Report No.: DDT-R18073105-1E1

Issued Date: Oct. 11, 2018

FCC AND IC CERTIFICATION TEST REPORT

FOR

Applicant	:	Continental Automotive GmbH
Address	:	Siemensstrasse 12 SV C TS RBG EMC-Laboratory
Equipment under Test	:	Tyre Pressure Monitoring Sensor
Model No.	:	TIS-15
Trade Mark	:	Continental
FCC ID	:	KR5TIS-15
IC ID	:	7812D-TIS15
Manufacturer	:	Continental Automotive GmbH
Address	:	Siemensstrasse 12 SV C TS RBG EMC-Laboratory

Issued By: Dongguan Dongdian Testing Service Co., Ltd.

Add: No. 17, Zongbu Road 2, Songshan Lake Sci&Tech, Industry Park, Dongguan City, Guangdong Province, China, 523808

Tel: +86-0769-38826678, **E-mail:** ddt@dgddt.com, http://www.dgddt.com

REPORT

TABLE OF CONTENTS

Test report declares....3
1 Summary of test results 6
2 General test information.... 7
2.1. Description of EUT 7
2.2. Accessories of EUT 7
2.3. Assistant equipment used for test.... 7
2.4. Block diagram of EUT configuration for test.... 7
2.5. Deviations of test standard 7
2.6. Test environment conditions.... 8
2.7. Test laboratory 8
2.8. Measurement uncertainty 8
3 Equipment used during test 9
4. On Time and Duty Cycle.... 10
4.1. Block diagram of test setup 10
4.2. Limits 10
4.3. Test Procedure.... 10
4.4. Test Result 10
4.5. Original test data 11
5. 20dB Bandwidth and 99% Bandwidth 12
5.1. Block diagram of test setup 12
5.2. Limits 12
5.3. Test Procedure.... 12
5.4. Test Result 12
5.5. Original test data 12
6 Stop transmitting time test 14
6.1. Block diagram of test setup 14
6.2. Limits 14
6.3. Test Procedure.... 14
6.4. Test Result 14
6.5. Original test data 14
7 Radiated emission 15
7.1. Block diagram of test setup 15
7.2. Limit.... 16
7.3. Test Procedure.... 17
7.4. Test result.... 19
8 Power Line Conducted Emission.... 23
8.1. Block diagram of test setup 23

8.2. Power Line Conducted Emission Limits 23
8.3. Test Procedure 23
8.4. Test Result 24
9 Antenna Requirements 25

TEST REPORT DECLARE

Applicant	:	Continental Automotive GmbH
Address	:	Siemensstrasse 12 SV C TS RBG EMC-Laboratory
Equipment under Test	:	Tyre Pressure Monitoring Sensor
Model No.	:	TIS-15
Trade mark	:	Continental
Manufacturer	:	Continental Automotive GmbH
Address	:	Siemensstrasse 12 SV C TS RBG EMC-Laboratory

Test Standard Used:

FCC Rules and Regulations Part 15 Subpart C.

RSS-210 Issue 9 August 2016

Test procedure used:

ANSI C63.10:2013

RSS-Gen Issue 5

We Declare:

The equipment described above is tested by Dongguan Dongdian Testing Service Co., Ltd. and in the configuration tested the equipment complied with the standards specified above. The test results are contained in this test report and Dongguan Dongdian Testing Service Co., Ltd. is assumed of full responsibility for the accuracy and completeness of these tests.

After test and evaluation, our opinion is that the equipment provided for test compliance with the requirement of the above FCC and IC standards.

Report No.:	DDT-R18073105-1E1		
Date of Receipt:	Jul. 31, 2018	**Date of Test:**	Jul. 31, 2018 ~ Oct. 11, 2018

Prepared By: ***Approved By:***

Ella Gong

Ella Gong/Engineer ***Damon Hu/EMC Manager***

Note: This report applies to above tested sample only. This report shall not be reproduced in parts without written approval of Dongguan Dongdian Testing Service Co., Ltd.

Revision history

Rev.	Revisions	Issue Date	Revised By
---	Initial issue	Oct. 11, 2018	

1 Summary of test results

Description of Test Item	Standard	Results
20dB Bandwidth and 99% Bandwidth	FCC Part 15: 15.215 ANSI C63.10:2013 RSS-210 Issue 9 RSS-Gen Issue 5	PASS
Stop Transmitting Time Test	FCC Part 15C: 15.231(a)(1) RSS-210 Issue 9	PASS
Radiated Emission	FCC Part 15: 15.209 FCC Part 15: 15.231(b) ANSI C63.10:2013 RSS-210 Issue 9 RSS-Gen Issue 5	PASS
Power Line Conducted Emissions	FCC Part 15: 15.207 ANSI C63.10:2013 RSS-210 Issue 9 RSS-Gen Issue 5	N/A
Antenna requirement	FCC Part 15: 15.203 RSS-210 Issue 9 RSS-Gen Issue 5	PASS
Note: N/A is an abbreviation for Not Applicable.		

2 General test information

2.1. Description of EUT

EUT* Name	:	Tyre Pressure Monitoring Sensor
Model Number	:	TIS-15
EUT function description	:	Please reference user manual of this device
Power supply	:	DC 3V
Operation frequency	:	433.92MHz
Modulation	:	FSK, ASK
Antenna Type	:	Integrated antenna
Sample Type	:	Series production

Note 1: EUT is the ab. of equipment under test.
Note 2: For FSK and ASK, based exploratory test, there is no significant difference of that two types test result, after the preliminary scan, some items final test were only performed with the worse case.

2.2. Accessories of EUT

Description of Accessories	Manufacturer	Model number	Serial No.	Other
N/A	N/A	N/A	N/A	N/A

2.3. Assistant equipment used for test

Assistant equipment	Manufacturer	Model number	Serial No.	Other
N/A	N/A	N/A	N/A	N/A

2.4. Block diagram of EUT configuration for test

EUT

Tested mode, channel, information		
Mode	Channel	Frequency (MHz)
TX mode	/	433.92

Note：New battery is used during all test

2.5. Deviations of test standard

No Deviation.

2.6. Test environment conditions

During the measurement the environmental conditions were within the listed ranges:

Temperature range:	21-25℃
Humidity range:	40-75%
Pressure range:	86-106kPa

2.7. Test laboratory

Dongguan Dongdian Testing Service Co., Ltd.

Add: No. 17, Zongbu Road 2, Songshan Lake Sci&Tech, Industry Park, Dongguan City, Guangdong Province, China, 523808

Tel: +86-0769-89201699, http://www.dgddt.com, Email: ddt@dgddt.com

CNAS Accreditation No. L6451; A2LA Accreditation No. 3870.01

Designation Number: CN1182; Test Firm Registration Number: 540522

Industry Canada site registration number: 10288A-1

2.8. Measurement uncertainty

Test Item	Uncertainty
Bandwidth	1.1%
Peak Output Power(Conducted)(Spectrum analyzer)	0.86dB (10 MHz ≤ f < 3.6GHz);
	1.38dB (3.6GHz ≤ f < 8GHz)
Peak Output Power(Conducted)(Power Sensor)	0.74dB
Power Spectral Density	0.74dB (10 MHz ≤ f < 3.6GHz);
	1.38dB (3.6GHz ≤ f < 8GHz)
Frequencies Stability	6.7×10^{-8} (Antenna couple method)
	5.5×10^{-8} (Conducted method)
Conducted spurious emissions	0.86dB (10 MHz ≤ f < 3.6GHz);
	1.40dB (3.6GHz ≤ f < 8GHz)
	1.66dB (8GHz≤ f < 22GHz)
Uncertainty for radio frequency (RBW<20kHz)	3×10^{-8}
Temperature	0.4℃
Humidity	2%
Uncertainty for Radiation Emission test (30MHz-1GHz)	4.70 dB (Antenna Polarize: V)
	4.84 dB (Antenna Polarize: H)
Uncertainty for Radiation Emission test (1GHz-40GHz)	4.10dB (1-6GHz)
	4.40dB (6GHz-18GHz)
	3.54dB (18GHz-26GHz)
	4.30dB (26GHz-40GHz)
Uncertainty for Power line conduction emission test	3.32dB (150kHz-30MHz)
Note: This uncertainty represents an expanded uncertainty expressed at approximately the 95% confidence level using a coverage factor of k=2.	

3 Equipment used during test

Equipment	Manufacturer	Model No.	Serial No.	Last Cal.	Cal. Interval
RF Connected Test (Tonscend RF Measurement System)					
Spectrum analyzer	R&S	FSU26	200071	Oct. 23, 2017	1 Year
Wideband Radio Communication tester	R&S	CMW500	117491	Jun. 29, 2018	1 Year
Vector Signal Generator	Agilent	E8267D	US49060192	Oct. 23, 2017	1 Year
Vector Signal Generator	Agilent	N5182A	MY48180737	Jun. 29, 2018	1 Year
Power Sensor	Agilent	U2021XA	MY55150010	Oct. 21, 2017	1 Year
Power Sensor	Agilent	U2021XA	MY55150011	Oct. 23, 2017	1 Year
DC Power Source	MATRIS	MPS-3005L-3	D813058W	Aug. 18, 2018	1 Year
Attenuator	Mini-Circuits	BW-S10W2	101109	Aug. 18, 2018	1 Year
RF Cable	Micable	C10-01-01-1	100309	Oct. 21, 2017	1 Year
Temp&Humi Programmable	ZHIXIANG	ZXGDJS-150L	ZX170110-A	Oct. 21, 2017	1 Year
Test Software	JS Tonscend	JS1120-3	Ver.2.7	N/A	N/A
Radiation 1#chamber					
EMI Test Receiver	R&S	ESU8	100316	Oct. 21, 2017	1 Year
Spectrum analyzer	Agilent	E4447A	MY50180031	Jun. 29, 2018	1 Year
Trilog Broadband Antenna	Schwarzbeck	VULB9163	9163-462	Nov. 09, 2017	1 Year
Active Loop antenna	Schwarzbeck	FMZB-1519	1519-038	Oct. 17, 2017	1 Year
Double Ridged Horn Antenna	R&S	HF907	100276	Oct. 17, 2017	1 Year
Broad Band Horn Antenna	Schwarzbeck	BBHA 9170	790	Nov. 09, 2017	1 Year
Pre-amplifier	A.H.	PAM-0118	360	Oct. 21, 2017	1 Year
Pre-amplifier	TERA-MW	TRLA-0040 G35	101303	Oct. 21, 2017	1 Year
RF Cable	HUBSER	CP-X2+ CP-X1	W11.03+ W12.02	Oct. 21, 2017	1 Year
RF Cable	N/A	SMAJ-SMA J-1M+ 11M	17070133+17070131	Nov. 08, 2017	1 Year
MI Cable	HUBSER	C10-01-01-1 M	1091629	Oct. 21, 2017	1 Year
Test software	Audix	E3	V 6.11111b	N/A	N/A
Power Line Conducted Emissions Test					
EMI Test Receiver	R&S	ESU8	100316	Oct. 21, 2017	1 Year
LISN 1	R&S	ENV216	101109	Oct. 21, 2017	1 Year
LISN 2	R&S	ESH2-Z5	100309	Oct. 21, 2017	1 Year
Pulse Limiter	R&S	ESH3-Z2	101242	Oct. 21, 2017	1 Year
CE Cable 1	HUBSER	N/A	W10.01	Oct. 21, 2017	1 Year
Test software	Audix	E3	V 6.11111b	N/A	N/A

4. On Time and Duty Cycle

4.1. Block diagram of test setup

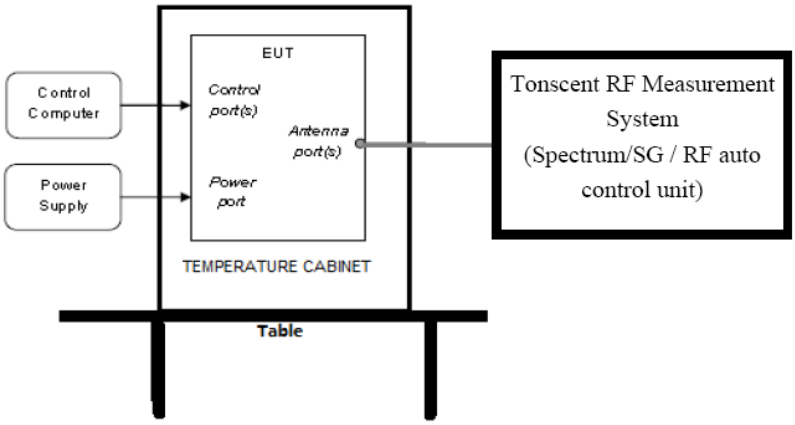

4.2. Limits

None: for reporting purposes only.

4.3. Test Procedure

Set the Centre frequency of the spectrum analyzer to the transmitting frequency;

Set the span=0MHz, RBW=1MHz, VBW=1MHz, Sweep time=200ms;

Trace mode = Single hold.

4.4. Test Result

Test Channel	Duty Cycle[%]	10log(1/x) Factor[dB]
433.92	0.10577	-19.51
Note 1: The transmitter duty cycle was measured using a spectrum analyser in the time domain and calculated by below Equation: δ(dB) = 20log(Δ)= 20 log(10.577/100)=-19.51dB δ is the duty cycle correction factor (dB) Δ is the duty cycle (dimensionless) Note 2: In cases where the pulse train exceeds 0.1 s, the measured field strength shall be determined during a 0.1 s interval		

4.5. Original test data

Duty Cycle

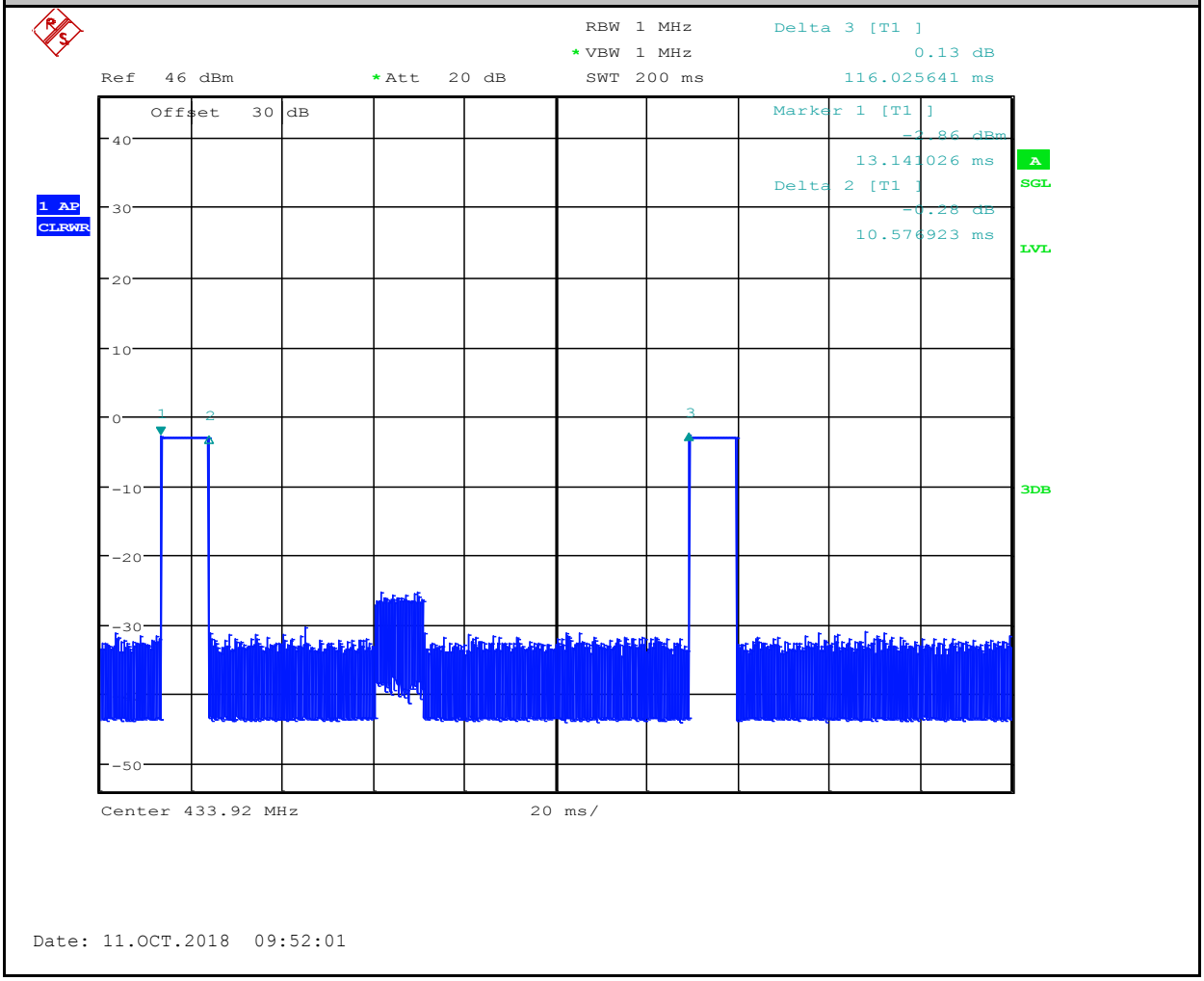

5. 20dB Bandwidth and 99% Bandwidth

5.1. Block diagram of test setup

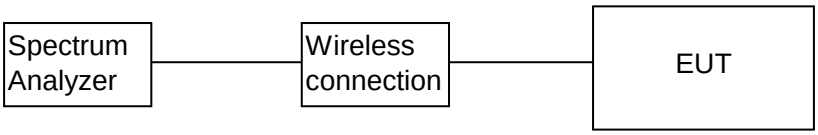

5.2. Limits

The bandwidth of the emission shall be no wider than 0.25% of the center frequency of devices operation above 70MHz and below 900MHz.

5.3. Test Procedure

(1) Connect EUT's antenna output to spectrum analyzer by RF cable.

(2) The bandwidth of the fundamental frequency was measured by spectrum analyzer with 3kHz RBW and 10kHz VBW. The 20dB bandwidth is defined as the total spectrum the power of which is higher than peak power minus 20dB.

5.4. Test Result

Frequency (MHz)	20 dB Bandwidth (kHz)	99% Bandwidth (kHz)	Limit (MHz): No wider than 0.25% of the center frequency	Conclusion
FSK	118.974	109.776	433.92*0.25%=1.0848MHz	PASS
ASK	80.168	210.625	433.92*0.25%=1.0848MHz	

5.5. Original test data

FSK

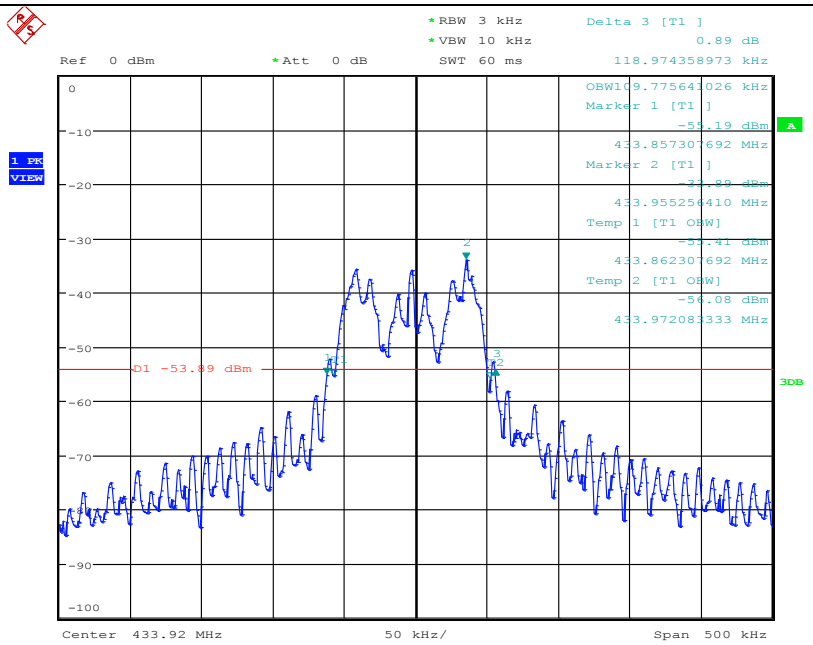

Date: 7.SEP.2018 14:23:38

ASK

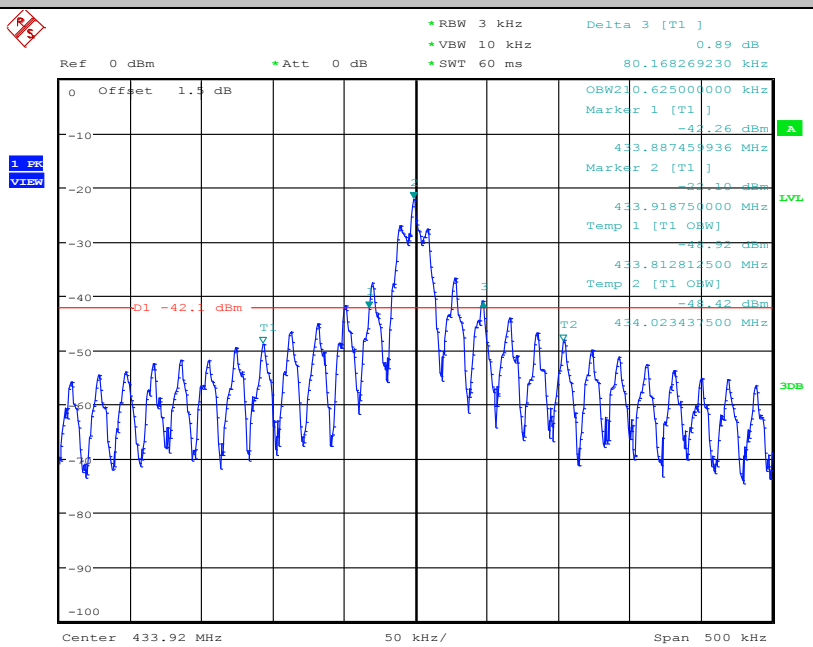

Date: 11.SEP.2018 15:05:35

6 Stop transmitting time test

6.1. Block diagram of test setup

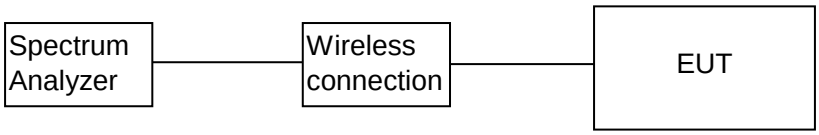

6.2. Limits

15.231(e), periodic transmissions: each transmission is not greater than 1 sec and silent period between transmissions is at least 30 times the duration of the transmission but in no case less than 10 sec.

6.3. Test Procedure

(1) The EUT's RF signal was coupled to spectrum analyzer by antenna connected to spectrum analyzer.

(2) Set the spectrum to zero span mode, and centered of EUT frequency.

(3) Measure the stop transmitting time after release EUT button.

6.4. Test Result

Frequency (MHz)	Burst Duration	Limit	Silent Period	Limit
433.92	480.765ms	≤1s	15.609s	>10s & >30* Burst Duration

6.5. Original test data

Graphs

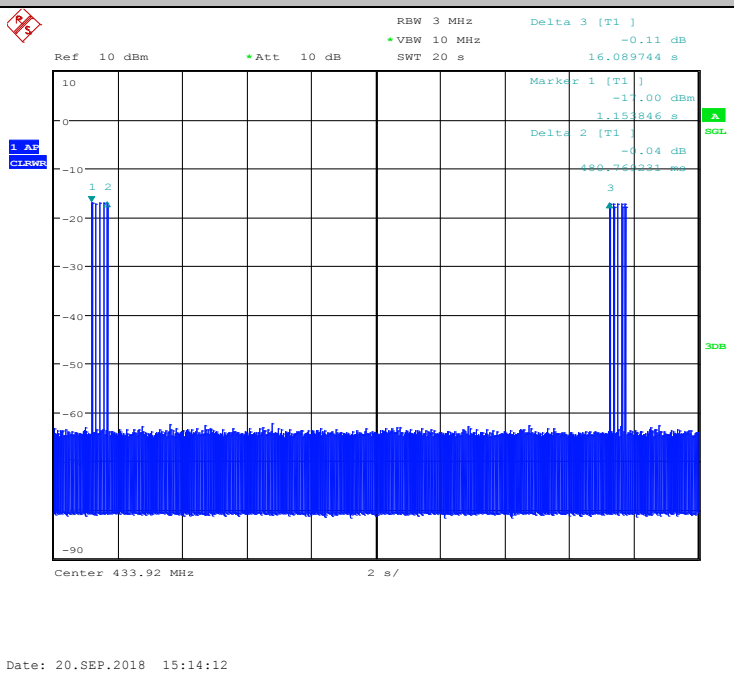

7 Radiated emission

7.1. Block diagram of test setup

In 3m Anechoic Chamber Test Setup Diagram for 9kHz-30MHz

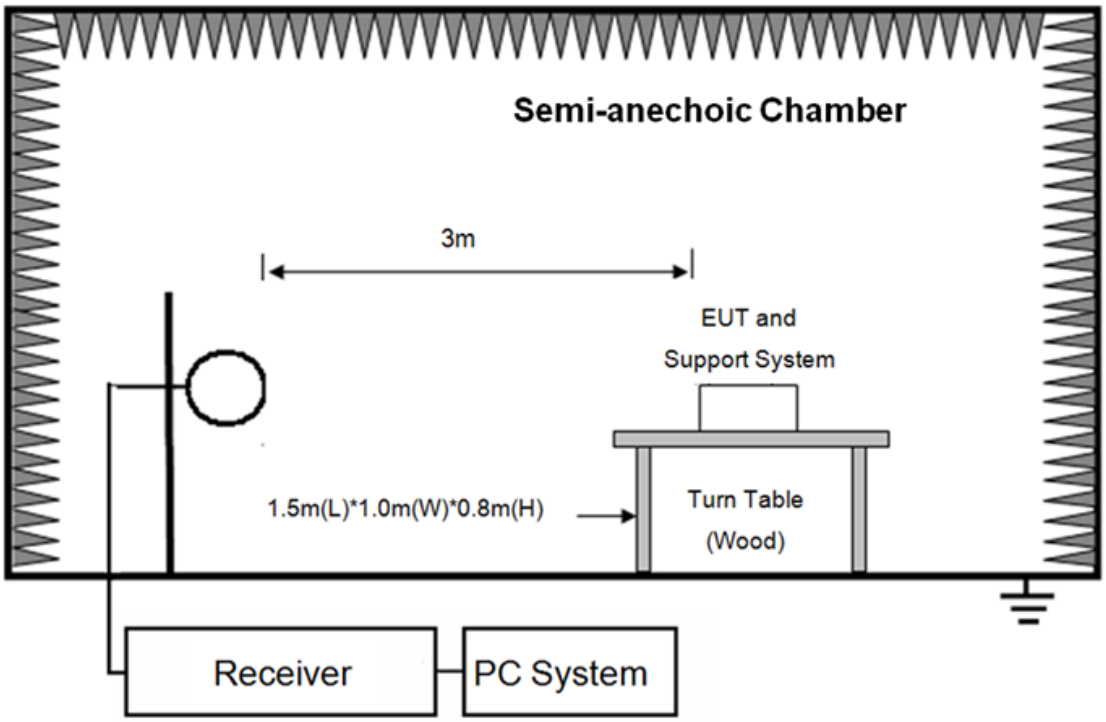

In 3m Anechoic Chamber Test Setup Diagram for below 1GHz

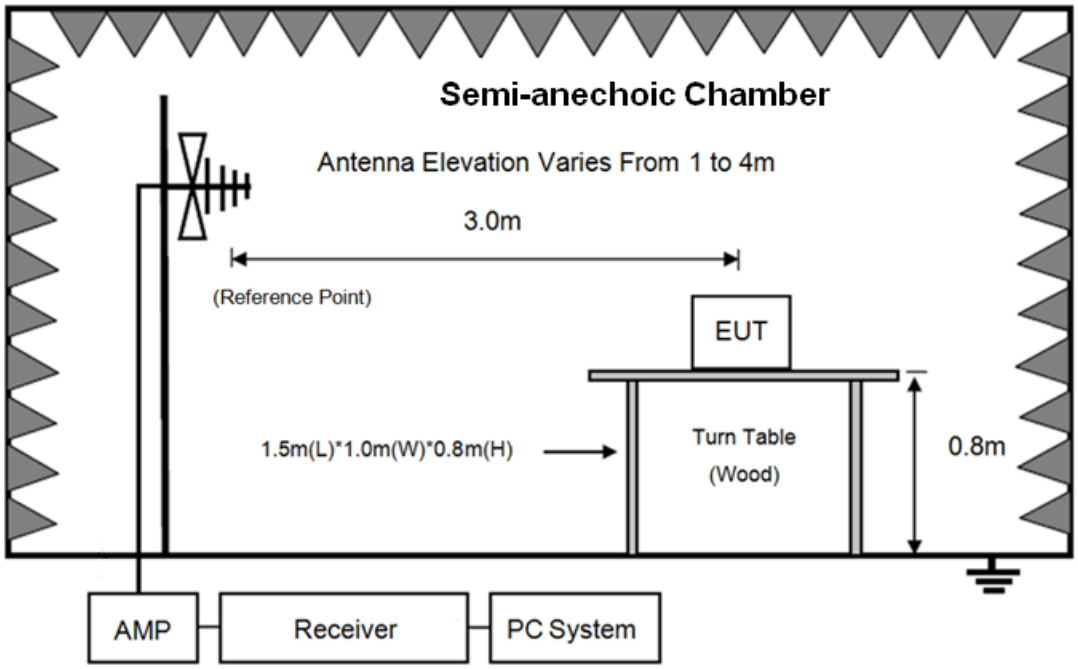

In 3m Anechoic Chamber Test Setup Diagram for frequency above 1GHz

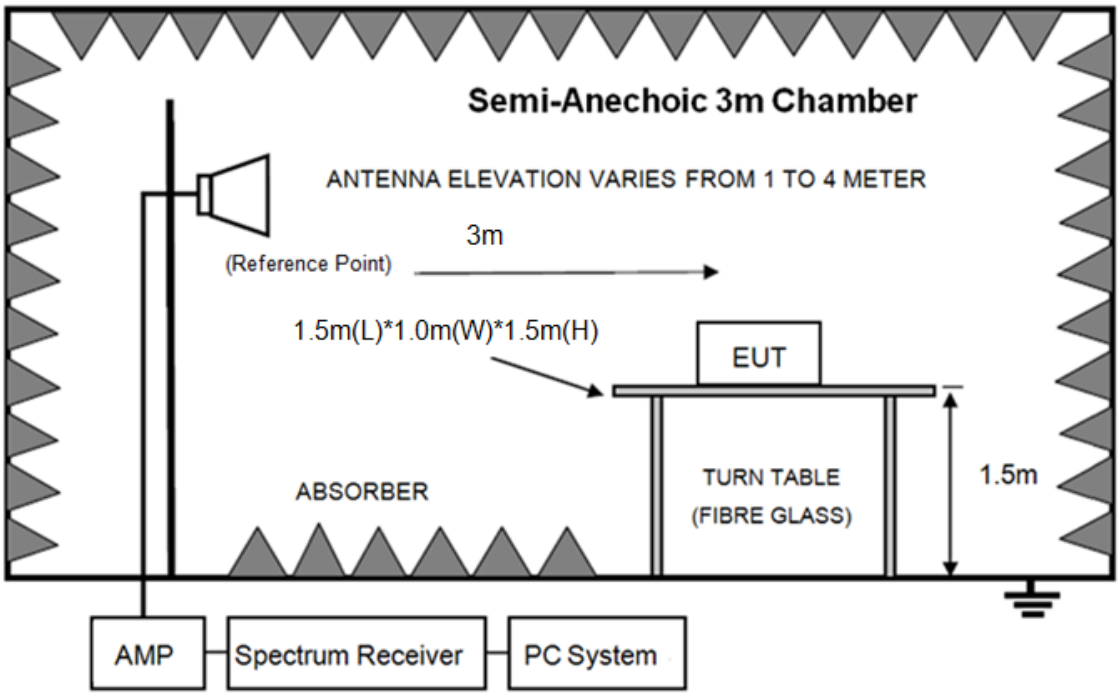

Note: For harmonic emissions test a appropriate high pass filter was inserted in the input port of AMP.

7.2. Limit

(1) FCC 15.205 Restricted frequency band

MHz	MHz	MHz	GHz
0.090-0.110	16.42-16.423	399.9-410	4.5-5.15
10.495-0.505	16.69475-16.69525	608-614	5.35-5.46
2.1735-2.1905	16.80425-16.80475	960-1240	7.25-7.75
4.125-4.128	25.5-25.67	1300-1427	8.025-8.5
4.1772&4.17775	37.5-38.25	1435-1626.5	9.0-9.2
4.2072&4.20775	73-74.6	1645.5-1646.5	9.3-9.5
6.215-6.218	74.8-75.2	1660-1710	10.6-12.7
6.26775-6.26825	108-121.94	1718.8-1722.2	13.25-13.4
6.31175-6.31225	123-138	2200-2300	14.47-14.5
8.291-8.294	149.9-150.05	2310-2390	15.35-16.2
8.362-8.366	156.52475-156.52525	2483.5-2500	17.7-21.4
8.37625-8.38675	156.7-156.9	2690-2900	22.01-23.12
8.41425-8.41475	162.0125-167.17	3260-3267	23.6-24.G
12.29-12.293	167.72-173.2	3332-3339	31.2-31.8
12.51975-12.52025	240-285	3345.8-3358	36.43-36.5
12.57675-12.57725	322-335.4	3600-4400	([2])
13.36-13.41			

(2) FCC 15.209 Limit.

FREQUENCY MHz	DISTANCE Meters	FIELD STRENGTHS LIMIT	
		μV/m	dB(μV)/m
0.009 ~ 0.490	300	2400/F(kHz)	67.6-20log(F)
0.490 ~ 1.705	30	24000/F(kHz)	87.6-20log(F)
1.705 ~ 30.0	30	30	29.54
30 ~ 88	3	100	40.0
88 ~ 216	3	150	43.5
216 ~ 960	3	200	46.0
960 ~ 1000	3	500	54.0
Above 1000	3	74.0 dB(μV)/m (Peak) 54.0 dB(μV)/m (Average)	

(3) FCC 15.231 section (e) limit

Fundamental Frequency (MHz)	Field Strength of Fundamental
433.92	AV:72.87dBuV/m @3m PK:92.87dBuV/m @3m

Note: (1)The emission limits shown in the above table are based on measurements employing a CISPR QP detector except for the frequency bands 9-90kHz, 110-490kHz and above 1000MHz.Radiated emissions limits in these three bands are based on measurements employing an average detector.

(2) At frequencies below 30MHz, measurement may be performed at a distance closer then that specified, and the limit at closer measurement distance can be extrapolated by below formula:

$Limit_{3m}$(dBuV/m)= $Limit_{300m}$(dBuV/m) + 40Log(300m/3m) = $Limit_{300m}$(dBuV/m) + 80
$Limit_{3m}$(dBuV/m)= $Limit_{30m}$(dBuV/m) + 40Log(30m/3m) = $Limit_{30m}$(dBuV/m) + 40

(3) Limit for this EUT
All the emissions appearing within 15.205 restricted frequency bands shall not exceed the limits shown in 15.209, all the other emissions include fundamental emission shall not exceed FCC 15.231 section (e) limit of comply with FCC 15.209 limit which permit higher emission level.

RSS-210 Issue 9 Annex D
(b)exceed 11,000 μV/m measured at 3 m with an average detector. The peak level of any emission within this specified frequency band shall not exceed 55,000 μV/m measured at 3 m; and

(c)The field strength of emissions on any frequencies outside this specified band shall not exceed the general field strength limits specified in RSS-Gen.

7.3. Test Procedure

(1) EUT was placed on a non-metallic table, 80 cm above the ground plane inside a semi-anechoic chamber for blow 1G and 150 cm above the ground plane inside a

semi-anechoic chamber for above 1G.

(2) Test antenna was located 3m from the EUT on an adjustable mast, and the antenna used as below table.

Test frequency range	Test antenna used	Test antenna distance
9kHz-30MHz	Active Loop antenna	3m
30MHz-1GHz	Trilog Broadband Antenna	3m
1GHz-18GHz	Double Ridged Horn Antenna(1GHz-18GHz)	3m
18GHz-40GHz	Horn Antenna(18GHz-40GHz)	1m

According ANSI C63.10:2013 clause 6.4.4.2 and 6,5.3, for measurements below 30 MHz, the loop antenna was positioned with its plane vertical from the EUT and rotated about its vertical axis for maximum response at each azimuth position around the EUT. And the loop antenna also be positioned with its plane horizontal at the specified distance from the EUT. The center of the loop is 1 m above the ground for measurement above 30MHz, the Trilog Broadband Antenna or Horn Antenna was located 3m from EUT, Measurements were made with the antenna positioned in both the horizontal and vertical planes of Polarization, and the measurement antenna was varied from 1 m to 4 m. in height above the reference ground plane to obtain the maximum signal strength.

(3) Below pre-scan procedure was first performed in order to find prominent frequency spectrum radiated emissions from 9kHz to 5GHz (tenth harmonic of fundamental frequency):

(a) Scanning the peak frequency spectrum with the antenna specified in step (3), and the EUT was rotated 360 degree, the antenna height was varied from 1m to 4m(Except loop antenna, it’s fixed 1m above ground.)

(b) Change work frequency or channel of device if practicable.

(c) Change modulation type of device if practicable.

(d) Change power supply range from 85% to 115% of the rated supply voltage

(e) Rotated EUT though three orthogonal axes to determine the attitude of EUT arrangement produces highest emissions.

(4) For final emissions measurements at each frequency of interest, the EUT was rotated and the antenna height was varied between 1m and 4m in order to maximize the emission. Measurements in both horizontal and vertical polarities were made and the data was recorded. In order to find the maximum emission, the relative positions of equipments and all of the interface cables were changed according to ANSI C63.10 2013 on Radiated Emission test.

(5) The emissions from 9kHz to 1GHz were measured based on CISPR QP detector except for the frequency bands 9-90kHz, 110-490kHz, for emissions from 9kHz-90kHz,110kHz-490kHz and above 1GHz were measured based on average detector, for emissions above 1GHz, peak emissions also be measured and need comply with Peak limit.

(6) The emissions from 9kHz to 1GHz, QP or average values were measured with EMI receiver with below RBW.

Frequency band	RBW
9kHz-150kHz	200Hz
150kHz-30MHz	9kHz
30MHz-1GHz	120kHz

(7) For emissions above 1GHz, both Peak and Average level were measured with Spectrum Analyzer, and the RBW is set at 1MHz, VBW is set at 3MHz for Peak measure; RMS detector RBW 1MHz VBW 3MHz for Average measure(according ANSI C63.10:2013 clause 4.2.3.2.3 procedure for average measure).

(8) X axis, Y axis, Z axis are tested, and worse setup X axis is reported.

7.4. Test result

PASS. (See below detailed test result)

Note1: According exploratory test no any obvious emission were detected from 9kHz to 30MHz.

Note2: For emissions above 1GHz. If peak results comply with AV limit, AV Result is deemed to comply with AV limit.

Note3:ASK and FSK data rate all have been tested，worse case is reported

Radiated Emission test (below 1GHz)

TR-4-E-009 Radiated Emission Test Result

Test Site	: DDT 3m Chamber 1#	D:\2018 RE1# Report Data\Q18073105-1E TIS-15\FCC BELOW1G.EM6	
Test Date	: 2018-08-13	**Tested By**	: Talent
EUT	: Tyre Pressure Monitoring Sensor	**Model Number**	: TIS-15
Power Supply	: DC 3V	**Test Mode**	: TX mode
Condition	: Temp:24.5'C, Humi:55.5%, Press:100.1kPa	**Antenna/Distance**	: 2017 VULB 9163 1#/3m/VERTICAL
Memo	:		

Data: 1

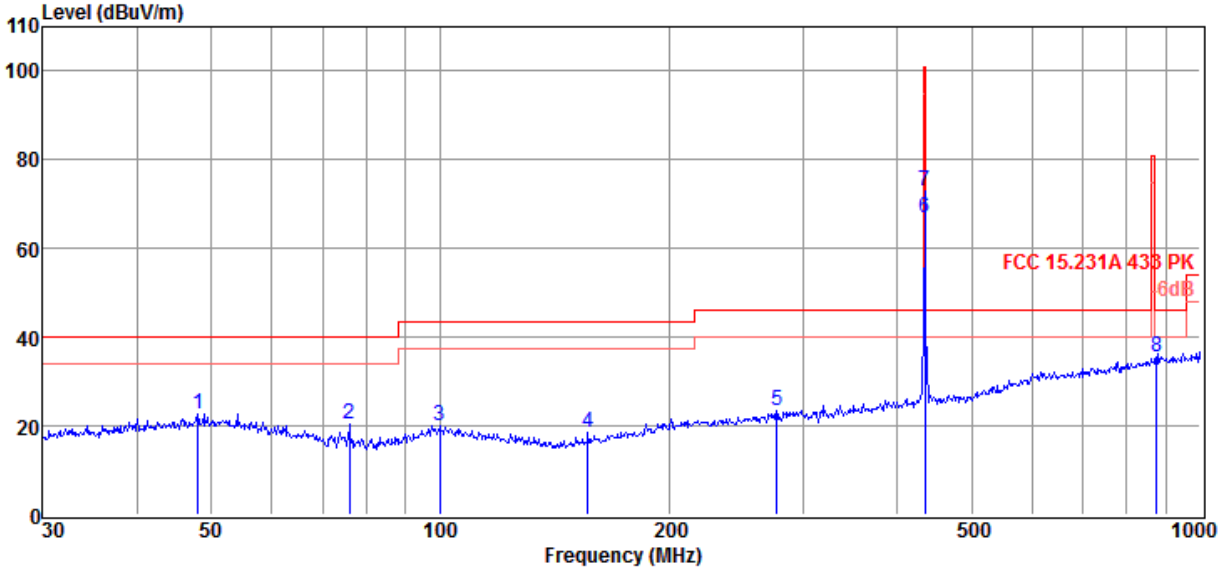

Item (Mark)	Freq. (MHz)	Read Level (dBµV)	Antenna Factor (dB/m)	Cable Loss dB	Result Level (dBµV/m)	Limit Line (dBµV/m)	Over Limit (dB)	Detector	Polarization
1	47.99	5.12	13.58	3.97	22.67	40.00	-17.33	Peak	VERTICAL
2	75.98	7.91	8.22	4.22	20.35	40.00	-19.65	Peak	VERTICAL
3	99.88	4.14	11.48	4.41	20.03	43.50	-23.47	Peak	VERTICAL
4	156.46	5.39	8.40	4.80	18.59	43.50	-24.91	Peak	VERTICAL
5	277.09	5.14	12.95	5.42	23.51	46.00	-22.49	Peak	VERTICAL
7	433.92	51.23	16.04	5.72	72.99	/	/	Peak	VERTICAL
8	875.25	5.53	22.29	7.53	35.35	46.00	-10.65	Peak	VERTICAL

Note: 1. Result Level = Read Level + Antenna Factor + Cable loss.
2. If Peak Result complies with QP limit, QP Result is deemed to comply with QP limit.
3. Test setup: RBW: 120 kHz, VBW: 300 kHz, Sweep time: auto.

TR-4-E-009 Radiated Emission Test Result

Test Site	: DDT 3m Chamber 1#	D:\2018 RE1# Report Data\Q18073105-1E TIS-15\FCC BELOW1G.EM6	
Test Date	: 2018-08-13	**Tested By**	: Talent
EUT	: Tyre Pressure Monitoring Sensor	**Model Number**	: TIS-15
Power Supply	: DC 3V	**Test Mode**	: TX mode
Condition	: Temp:24.5'C, Humi:55.5%, Press:100.1kPa	**Antenna/Distance**	: 2017 VULB 9163 1#/3m/HORIZONTAL
Memo	:		

Data: 2

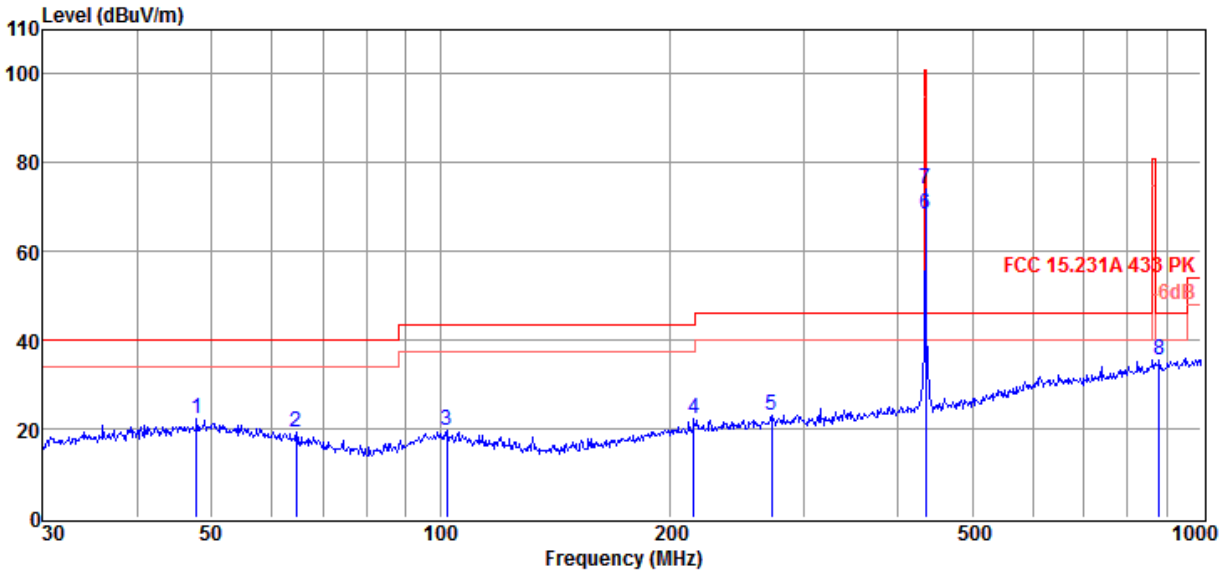

Item (Mark)	Freq. (MHz)	Read Level (dBµV)	Antenna Factor (dB/m)	Cable Loss dB	Result Level (dBµV/m)	Limit Line (dBµV/m)	Over Limit (dB)	Detector	Polarization
1	47.83	4.62	13.56	3.97	22.15	40.00	-17.85	Peak	HORIZONTAL
2	64.66	4.79	10.33	4.13	19.25	40.00	-20.75	Peak	HORIZONTAL
3	102.00	3.85	11.25	4.43	19.53	43.50	-23.97	Peak	HORIZONTAL
4	215.27	5.41	11.83	5.11	22.35	43.50	-21.15	Peak	HORIZONTAL
5	272.28	4.84	12.87	5.40	23.11	46.00	-22.89	Peak	HORIZONTAL
7	433.92	52.25	16.04	5.72	74.01	/	/	Peak	HORIZONTAL
8	881.41	5.58	22.37	7.55	35.50	46.00	-10.50	Peak	HORIZONTAL

Note: 1. Result Level = Read Level + Antenna Factor + Cable loss.
2. If Peak Result complies with QP limit, QP Result is deemed to comply with QP limit.
3. Test setup: RBW: 120 kHz, VBW: 300 kHz, Sweep time: auto.

Field Strength of The Fundamental Signal

Frequency (MHz)	PK Level (dBuV/m)	PK Limit Line (dBuV/m)	Over Limit (dB)	Polarization
433.92	74.01	92.87	-18.86	Horizontal
433.92	72.99	92.87	-19.88	Vertical

Frequency (MHz)	AV Level (dBuV/m)	AV Limit Line (dBuV/m)	Over Limit (dB)	Polarization
433.92	54.50	72.87	-18.37	Horizontal
433.92	53.48	72.87	-19.39	Vertical
Note: AV Level= PK Level+ Duty factor				

Radiated Emission test (above 1GHz)

Freq. (MHz)	Read level (dBµV)	Antenna Factor (dB/m)	PRM Factor (dB)	Cable Loss (dB)	Result Level (dBµV/m)	Limit (dBµV/m)	Margin (dB)	Detector type	Polarization
Tx mode									
5369.00	48.61	35.37	43.58	7.81	48.21	74.00	-25.79	Peak	HORIZONTAL
5760.00	48.20	35.60	43.34	8.06	48.52	74.00	-25.48	Peak	HORIZONTAL
7052.00	47.72	36.82	43.52	8.38	49.40	74.00	-24.60	Peak	HORIZONTAL
8208.00	47.33	37.24	43.86	9.47	50.18	74.00	-23.82	Peak	HORIZONTAL
9381.00	47.23	37.65	44.21	10.57	51.24	74.00	-22.76	Peak	HORIZONTAL
10282.00	48.21	38.37	44.36	10.94	53.16	74.00	-20.84	Peak	HORIZONTAL
5131.00	48.45	35.13	43.72	7.66	47.52	74.00	-26.48	Peak	VERTICAL
5709.00	49.24	35.58	43.37	8.03	49.48	74.00	-24.52	Peak	VERTICAL
6287.00	48.61	35.70	43.29	8.24	49.26	74.00	-24.74	Peak	VERTICAL
7273.00	47.67	36.91	43.58	8.58	49.58	74.00	-24.42	Peak	VERTICAL
8973.00	47.42	37.49	44.09	10.34	51.16	74.00	-22.84	Peak	VERTICAL
9500.00	47.79	37.70	44.25	10.63	51.87	74.00	-22.13	Peak	VERTICAL
Result: Pass									

Note: 1. Result Level = Read Level + Antenna Factor + Cable loss - PRM Factor.

2: For emissions above 1GHz. If peak results comply with AV limit, AV Result is deemed to comply with AV limit.

8 Power Line Conducted Emission

8.1. Block diagram of test setup

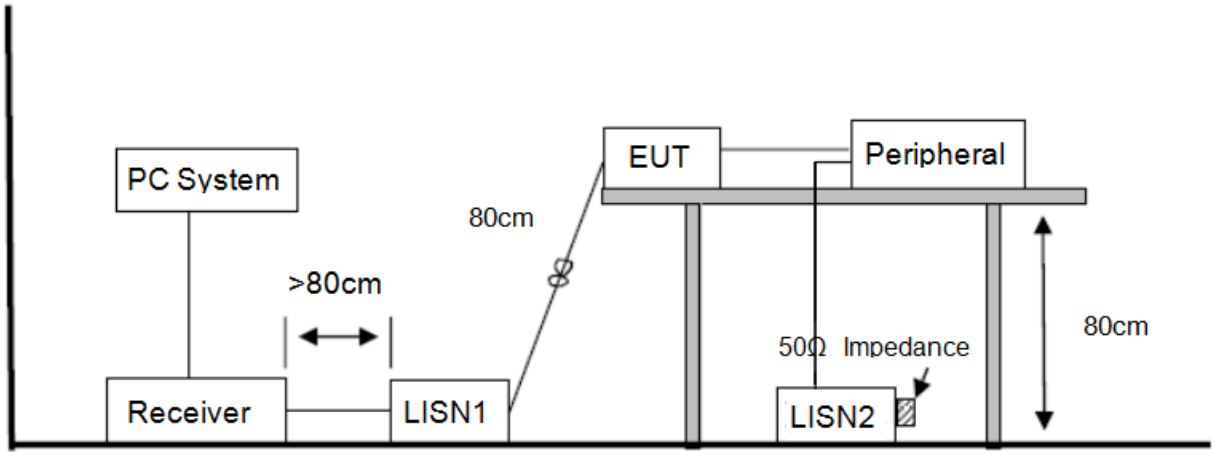

8.2. Power Line Conducted Emission Limits

Frequency	Quasi-Peak Level dB(μV)	Average Level dB(μV)
150kHz ~ 500kHz	66 ~ 56*	56 ~ 46*
500kHz ~ 5MHz	56	46
5MHz ~ 30MHz	60	50

Note 1: * Decreasing linearly with logarithm of frequency.

Note 2: The lower limit shall apply at the transition frequencies.

8.3. Test Procedure

The EUT and Support equipment, if needed, were put placed on a non-metallic table, 80cm above the ground plane.

Configuration EUT to simulate typical usage as described in clause 2.4 and test equipment as described in clause 10.2 of this report.

All I/O cables were positioned to simulate typical actual usage as per ANSI C63.10.

All support equipment power received from a second LISN.

Emissions were measured on each current carrying line of the EUT using an EMI Test Receiver connected to the LISN powering the EUT.

The Receiver scanned from 150 kHz to 30MHz for emissions in each of the test modes.

During the above scans, the emissions were maximized by cable manipulation.

The test mode(s) described in clause 2.4 were scanned during the preliminary test.

After the preliminary scan, we found the test mode producing the highest emission level.

The EUT configuration and worse cable configuration of the above highest emission levels were recorded for reference of the final test.

EUT and support equipment were set up on the test bench as per the configuration with highest emission level in the preliminary test.

A scan was taken on both power lines, Neutral and Line, recording at least the six highest emissions.

Emission frequency and amplitude were recorded into a computer in which correction factors were used to calculate the emission level and compare reading to the applicable limit.

The test data of the worst-case condition(s) was recorded.

The bandwidth of test receiver is set at 9 kHz.

8.4. Test Result

Not Applicable

Conducted limits are not required for devices which only employ battery power for operation according to 15.207(C)

9 Antenna Requirements

For intentional device, according to FCC 47 CFR Section 15.203, An intentional radiator shall be designed to ensure that no antenna other than that furnished by the responsible party shall be used with the device. The use of a permanently attached antenna or of an antenna that uses a unique coupling to the intentional radiator shall be considered sufficient to comply with the provisions of this section. The manufacturer may design the unit so that a broken antenna can be replaced by the user, but the use of a standard antenna jack or electrical connector is prohibited.

END OF REPORT