Step 8. Install the Safety Beam Sensors

The safety beam sensors [J4] can be installed in 3 different ways:

1) Door Track Installation (Preferred and easiest)
2) Wall Installation
3) Floor Installation

Door Track Installation:

Slide the curved portion of the sensor bracket around the outside edge of the door track. Snap into place so the sensor bracket is against the track.

NOTE. *Ensure both sensor brackets are the same height from the floor.*

Wall Installation:

1. Remove the curved portion from the sensor bracket.
2. Position the sensor bracket against the wall with the sensor facing the door. Make sure there is enough clearance for the beam to be unobstructed. Mark 2 mounting holes.

NOTE. *If additional clearance is needed, wooden blocks can be used. Make sure each bracket has the same amount of clearance so they align properly.*

3. Drill 3/16 inch pilot holes for each sensor bracket and attach the sensor brackets to the wall using lag screws.

Floor Installation:

1. Remove the curved portion from the sensor bracket.
2. Place both sensor brackets on the floor facing each other with the same distance from the wall without any obstruction.
3. Attach the sensor brackets to the floor using concrete anchors (not provided).

Door Track Installation

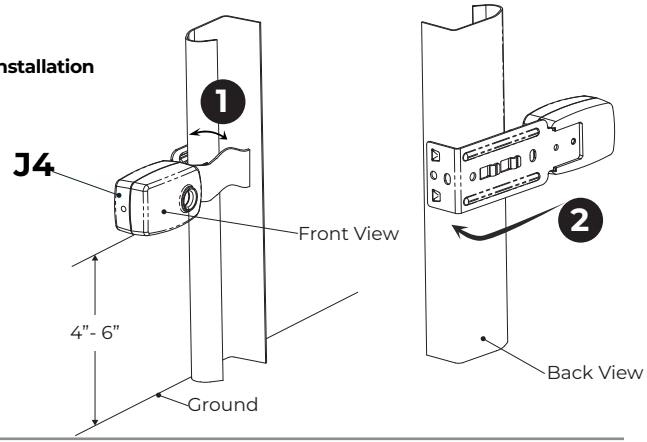

Wall / Floor Installation

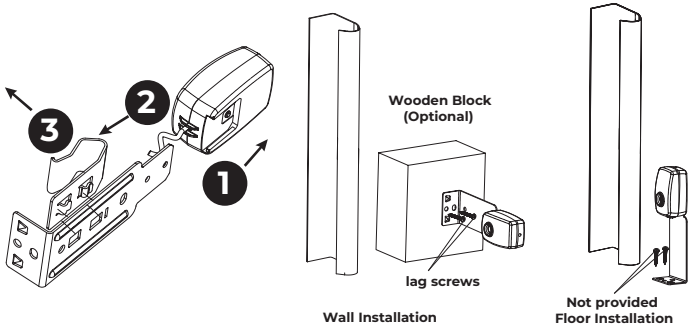

Step 9. Wire the Safety Beam Sensors

1. Run the wire from both sensors to the garage door opener. Attach the wire to the wall and ceiling with the wire clips.
2. Remove insulation from each set of wires. Separate the wires. Twist the two white non-marked wires together. Twist the two white marked wires together.
3. Connect 2 pairs of twisted wires to the safety beam sensor terminals on the garage door opener. To insert or remove the wires from the terminal, push in the tab with a screwdriver tip.
   Each pair of twisted wires can be connected to either terminal.

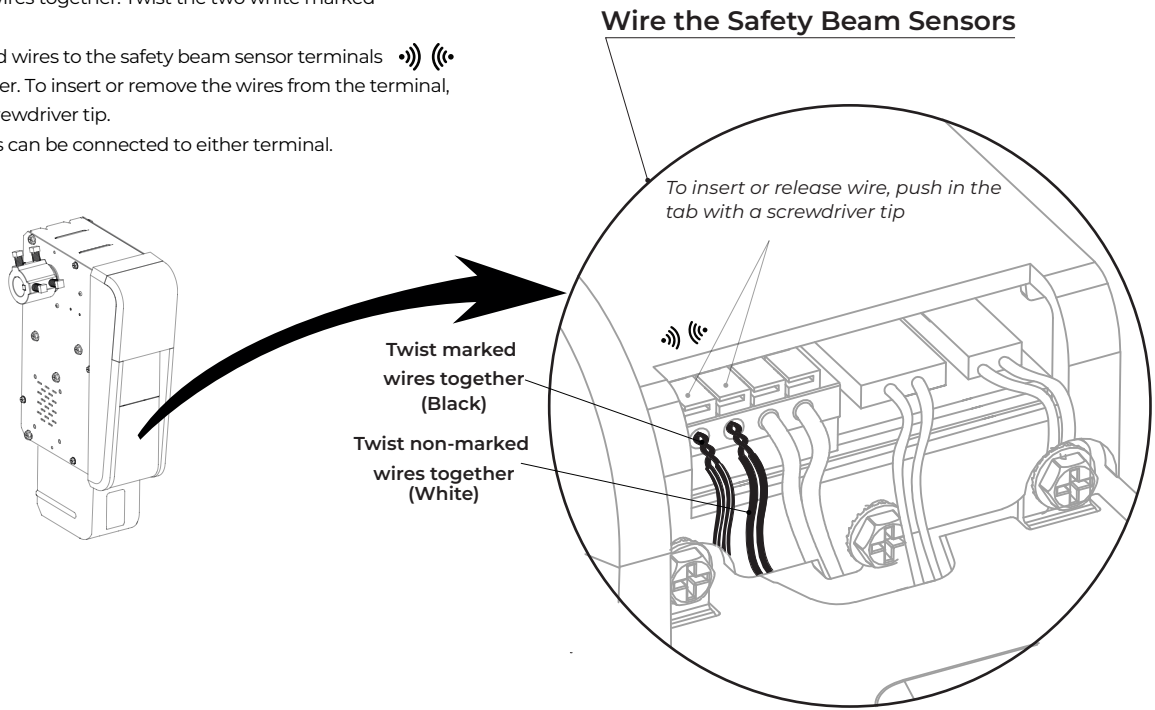

Step 10. Connect Power

WARNING

To prevent possible SERIOUS INJURY or DEATH.

- **Disconnect power before removing cover for permanent wiring.**
- **Never use an extension cord, 2-wire adapter or change plug in any way.**
- **All wiring must be in compliance with all local electrical and building codes.**

Plug garage door opener into a grounded outlet. If a grounded outlet is not available, contact a qualified electrician to install a proper.
DO NOT ACTIVATE THE OPENER UNTIL INSTRUCTED

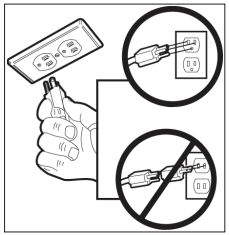

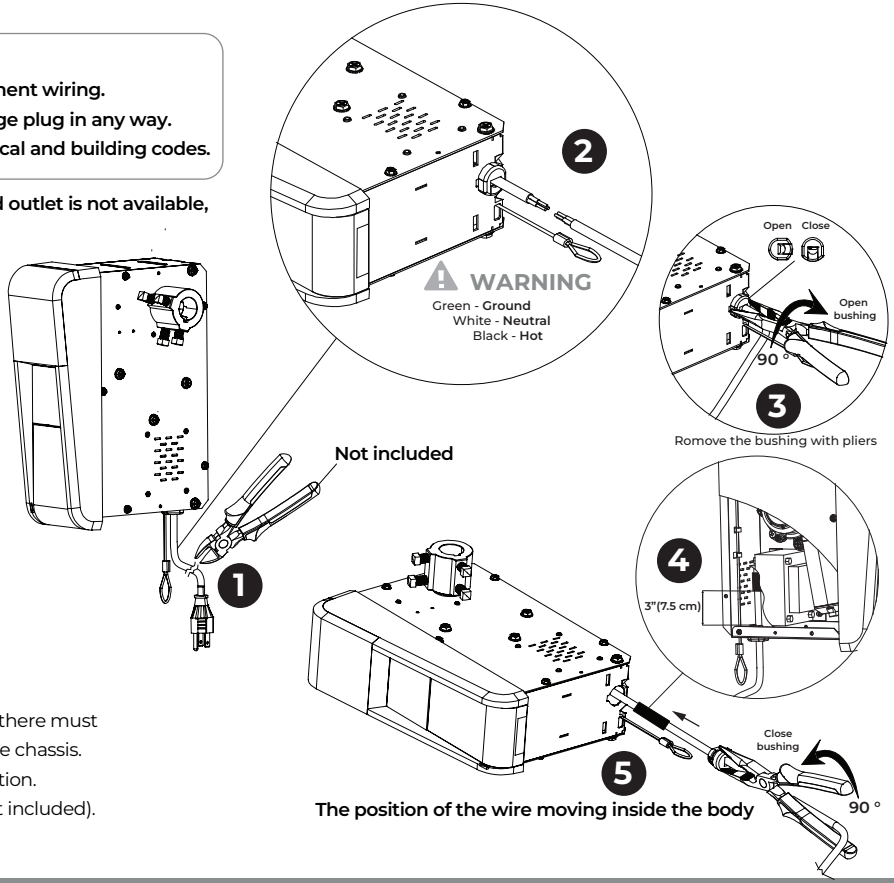

There are 2 options for connecting power:

1. AC Plug (Preferred & easiest)
   1. Plug in the garage door opener into a grounded outlet.
   2. Do not run garage door opener at this time.
2. Permanent Wiring by electrician
   1. Cut existing power cord outside chassis.
   2. The wire connections must be made inside the chassis and there must be at least 3"(7.5 cm) of new power supply line wire inside the chassis. Connect the conduit to the opener with the proper termination. Connect conduit wiring to opener wiring with wire nuts (not included).
   3. The opener must be grounded.

Step 11. Aligning the safety beam sensors

Safety beam sensors must be installed and aligned correctly for the garage door opener to operate properly.

NOTE.

Red LED is the transmitting sensor,
Blue LED is the receiving sensor.

1. Both safety sensors should be facing each other without any obstruction.
2. Check to make sure the LEDs in both sensors are glowing steadily.

The LEDs in both sensors will glow steadily if they are aligned and wired correctly. Further alignment is necessary if any LEDs are not glowing steadily.

If the Red LED is not glowing, please check the following:

1. Make sure the garage door opener is plugged into AC power.
2. Make sure the sensor wires are not shorted / broken.
3. Ensure the sensor has been wired correctly. White non-marked wires are twisted together and insert to one safety sensor terminal. White marked wires are twisted together and insert to another safety sensor terminal.

If the Blue LED is not glowing, please check the following:

1. Make sure the sensors are aligned. Reposition the sensor bracket until the Blue LED is glowing steadily.
2. Make sure the sensor wires are not shorted / broken.

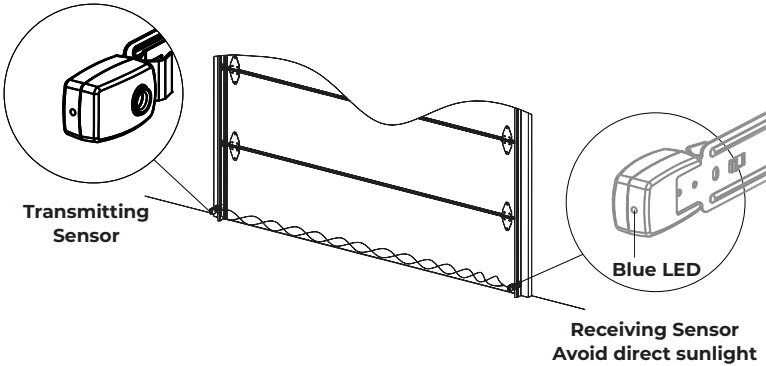

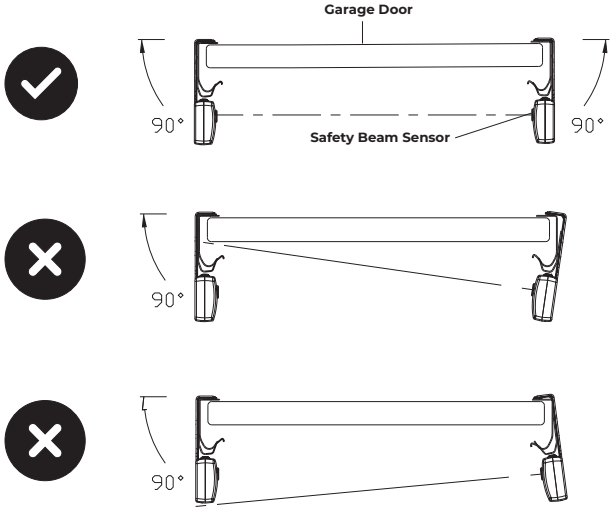

Step 1. Programming remote / keypad

1. Press and release the " ⚙ " button, the LED display shows " P ".
2. Press the button on the remote that you would like to program.
   For keypad, enter the [PIN] [#]. Refer to page 28 for more information.
3. Once the remote / keypad is programmed, the LED display will be off and you will hear one beep.

NOTE.

Each programming step has a 30-second time limit for completion after the function is initiated. Restart the step as many times as necessary to complete the programming. Each button on each remote must be programmed separately.

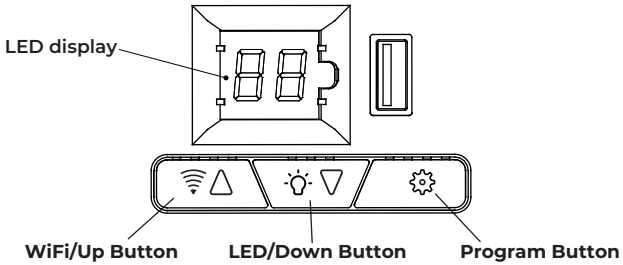

Step 2. Programming the travel limits

WARNING

- Incorrect adjustment of garage door travel limits will interfere with proper operation of safety reversal system.
- After making any adjustment, both safety beam sensors and safety reversal system must be tested.

1. Press and hold the " ⚙ " button for 5 seconds until the LED display shows " 1 ".

NOTE.

Do not release the " ⚙ " button when you see " P " on the LED display.

2. Press and hold the **UP** button ▲ until the door is in the desired fully open position.

NOTE.

*Use the DOWN button if the door opens too far. Press **UP / DOWN** button momentarily to adjust the open travel limit as necessary.*

3. Once the door is in the desired fully open position, press and release the " ⚙ " button. The LED display will show " 2 ".

4. Press and hold the DOWN button ▼ until the door is 2" from the ground. Press DOWN button ▼ momentarily until the door is in the desired fully closed position.
5. Once the door is in the desired fully closed position, press and release the " ⚙ " button. The LED display will show " 3 ".
6. Press the remote or door control to open the door. The door will open to the fully open position. The LED display will show "4".
7. Press the remote or door control to close the door. The door will close to the fully closed position. The LED display will be off.
8. You have programmed the travel limits successfully.

NOTE.

Door should rest on the floor until the weather strip is partially compressed. Damaged doors or uneven doors may not seal properly. Repair these conditions to achieve a proper seal. DO NOT set the door close limit too far down so that the lift cable becomes loose.

Step 3. Vehicle Programming(In-Car Remote)

WARNING

- Before programming, make sure that people and objects are out of the way of the garage door. The garage door will open and close during programming. DO NOT proceed with vehicle programming if people or pets are in the path of the garage door.

1. Clear the In-Car Remote by holding on to the first and third buttons for 20 seconds. Clearing the In-Car Remote will erase all previously programmed garage door openers.
2. Press and hold the Skylink remote button for 10 seconds until the LED flashes rapidly.
3. Choose the button on the In-Car Remote that will be used to open the door. Press and hold this chosen button until the indicator on the In-Car Remote blinks slow then fast. Once it blinks, release this button.

Step 4. Test safety reversal system

With the garage door open, lay a 2x4 board flat on the floor, centered under the garage door.

Press the door control to close the door. The door MUST stop and reverse when it makes contact with the 2x4 board.

If the door stops before contact with the board or if it does not reverse on contact with the obstruction, increase the down travel limit, then repeat the test above.

Repeat this process as needed until the door passes this test.

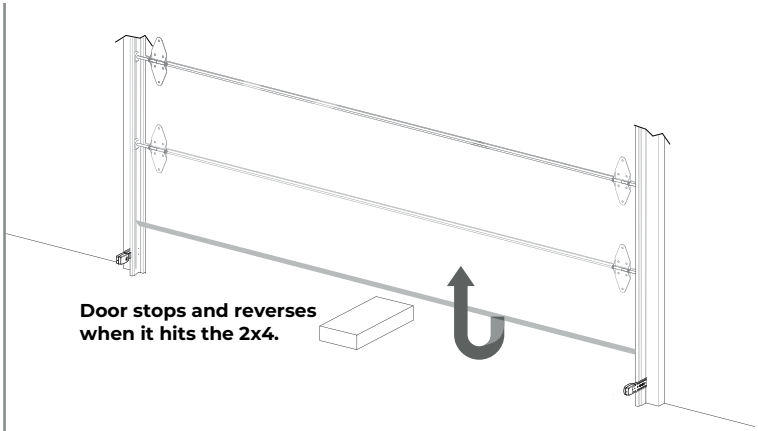

Step 5. Test safety beam sensors

With the garage door open, place the garage door opener carton box in the path of the door.

Press the door control to close the door, the door will not move more than an inch (2.5 cm) and the LED display will show “b”.

You may also check both safety sensor LEDs (red and blue). They should be on steadily. This indicates the system is working properly. If one of the LEDs is not on steadily, please refer to "Aligning the safety beam sensors" on Page 21 to troubleshoot.

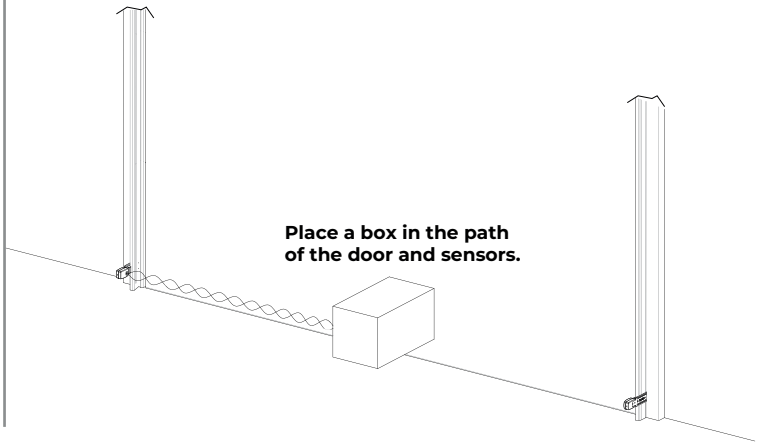

Manually Open / Close Garage Door

To open the door manually, first disconnect (disengage) the gear:

1. Disengage the door lock.
2. Fully close the door if possible.
3. Pull the emergency release handle downward until a small click sound is heard from the garege door opener.
4. The door can now be opened manually.

To re-connect (engage) the gear:

1. Pull the emergency release handle downward until a small click sound is heard from the garege door opener.
2. The door is now re-connect to the gear.

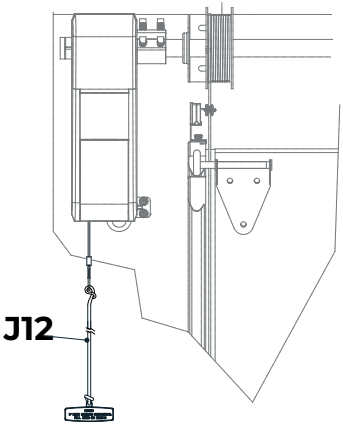

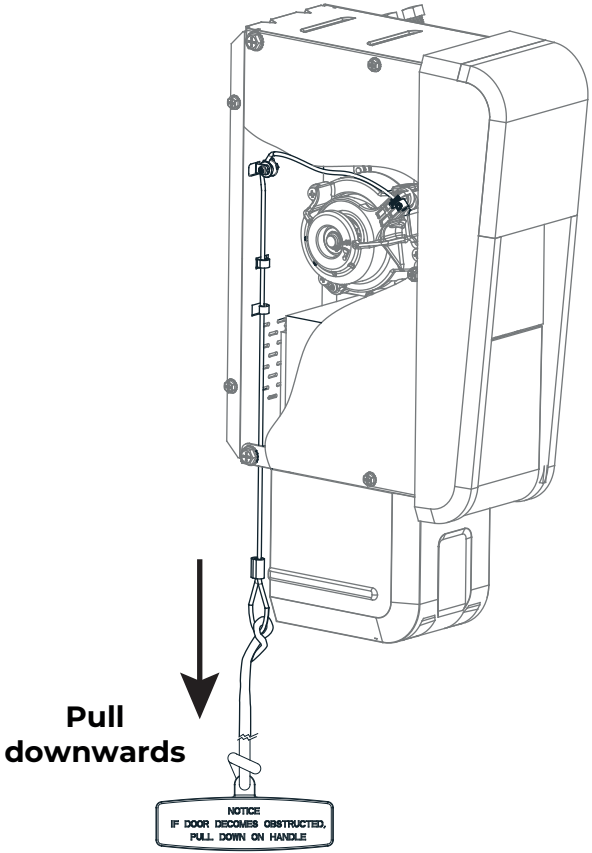

Remote Control

To operate the garage door opener with the remote, press the desired button on the remote control. The remote can operate at a distance of up to 100 m. If the remote control does not operate the garage door opener, please follow instructions "Programming remote / keypad" on Page 22 to program the remote control to the garage door opener.

Passcode Protection (ONLY for 3-Button Remote)

You can enable the passcode protection on the 3-button remote. Once enabled, passcode must be entered to unlock the remote before it can operate the garage door opener. The factory default setting is passcode function disabled.

To enable passcode protection:

1. Press and hold buttons 1 and 3 ssimultaneously for 6 seconds until the LED flashes.
2. Enter the passcode (default passcode is 2 2 2), i.e. press button 2 three times.
3. Press and hold buttons 1 and 3 simultaneously, LED blinks once, passcode function is now enabled.

To change the passcode:

1. Press and hold buttons 1 and 3 simultaneously for 10 seconds until the LED changes from flashing quickly to flashing slowly.
2. Enter the old passcode (default passcode is 2 2 2).
3. Press and hold buttons 1 and 3 simultaneously, LED blinks once, enter the new passcode (from 2-8 digits). If LED flashes 3 times, you have entered the incorrect passcode. Start again from step 1.
4. After entering the new passcode, press and hold buttons 1 and 3 simultaneously to confirm.

Toggle between enable/disable passcode protection:

1. Press and hold buttons 1 and 3 simultaneously for 6 seconds until the LED flashes.
2. Enter the passcode (default passcode is 2 2 2), i.e. press button 2 three times.
3. Press and hold buttons 1 and 3 simultaneously, LED blinks once, passcode function is toggled, i.e. from disable to enable, or enabled to disabled).

Forgot Passcode and Factory Reset:

If you forgot your passcode or would like to change the passcode to factory default 2 2 2, follow the steps below.

1. Press and hold buttons 1 and 2 for 10 seconds until the LED flashes.
2. Release both buttons. Passcode function is now disabled and passcode is set to factory default 2 2 2.

Keypad

Keypad Installation:

1. Undo the screw on the bottom of the keypad and remove back cover.
2. Insert the battery.
3. Secure the back cover with 2 screws at the selected location.
4. Slide the keypad unit to the back cover and secure it with the bottom screw.

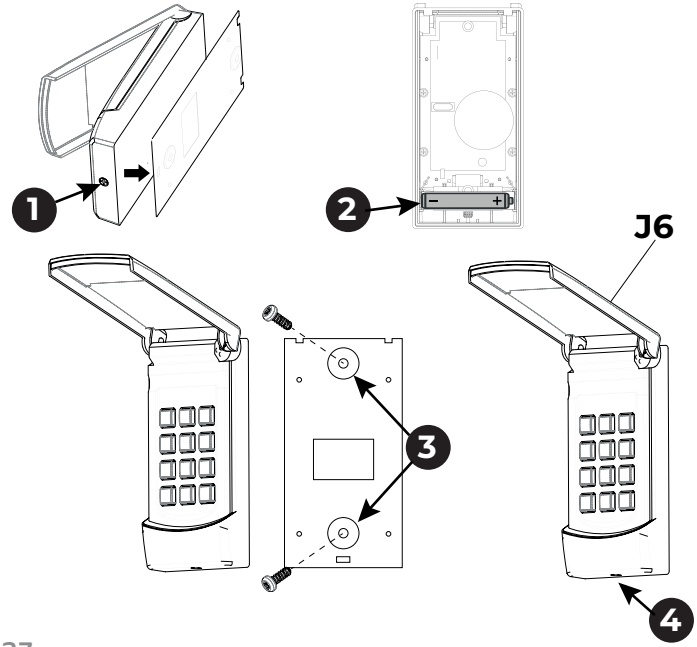

To operate the garage door opener with the keypad:
Enter the [PIN] + [#]. The factory default PIN is 0 0 0 0.
You can enter [0 0 0 0 #] to operate the garage door opener.

To change the PIN, follow the instructions below:

1. Enter the current **PIN + [*]**, i.e. **[0 0 0 0 *]** if you are changing from factory default PIN.
2. Enter a new PIN (2 to 8 digits) + **[*]**, such as **[1 2 3 4 *]**.
3. Re-enter the new PIN again, **[1 2 3 4 *]**.
4. If the new PIN is accepted, keypad will emit 3 beeps.
5. Try with the new PIN to operate the garage door opener by entering **[New PIN] + [#]**.

It is not necessary to reprogram the keypad to the garage door opener after changing the PIN.

NOTE.

If the keypad does not operate the garage door opener, please follow instructions "Programming remote / keypad" on Page 22 to program the keypad to the garage door opener.

Keypad(continued)

Reset PIN to factory default

1. Undo the screw on the bottom of the keypad and remove the battery.
2. Press and hold **[*]** and **[#]** while battery is removed.
3. While holding on to both buttons, insert the battery.
4. Keep holding both buttons for about 5 seconds until you hear a long beep.

The PIN is now reset to **0 0 0 0**. Attach the keypad to the back plate and secure the screw at the bottom.

Re-program the keypad to the garage door opener following the instructions "Programming remote / keypad" on Page 22.

Enable Multiple Doors Operating Mode

This keypad can operate up to 4 Skylink garage door openers.
To enable multiple doors mode:
1. Enter **[PIN] [*] [9] [#]**.
2. You will hear 2 beeps indicating keypad is now in multiple doors mode.

Program keypad in Multiple Doors Mode to Garage Door opener
1. Press " ⚙ " button on the garage door opener, LED display will show " P ".
2. Enter **[PIN] [#] [Door #]**, Door # is either **[1], [2], [3] or [4]**

To control Multiple Doors:
Enter **[PIN] [#] [Door #]**.
For example, to control door 2, enter **[PIN] [#] [2]**
Disable Multiple Doors:
1. Enter **[PIN] [*] [0] [#]**.
2. Press **[PIN] [#]**. You will hear 2 beeps indicating keypad is now in single door mode.

NOTE.

If the keypad does not operate the garage door opener, please follow instructions "Programming remote / keypad" on Page 22. to program the keypad to the garage door opener.

Deluxe Wall Console offers 4 functions:

Door Control: Press this button to open/close the garage door.
Light Control: Press the light button to turn the garage door opener light on or off. Once it is turned on, it will stay on until this light button is pressed again. The garage door opener light will also be on during a door open / door close cycle, it will stay on for approximately 3 minutes.

Remote Lock: Slide to the lock position to disable the garage door opener from being activated by remote controls and wireless keypad. Slide to the unlock position to resume normal operation.

Auto-Close Timer: Auto-Close Timer allows the garage door to be closed automatically after a specific period of time. This feature can only be used for sectional doors. It CAN NOT be used on a one-piece door.
To disable Auto-Close Timer, place the slide switch setting to the "Off" position to disable this feature.
To enable Auto-Close Timer, place the slide switch to the desired time setting, this is how long the door will remain open before auto closing:
3 – 3 Minutes
10 – 10 Minutes
30 – 30 Minutes
1. If Auto-Close Timer is enabled, the timer will start once the door is open. The LED display will show "A" to indicate Auto-Close Timer is counting down. The garage door opener will emit a beeping and flashing alert before closing the door. If the garage door cannot be closed completely for any reason, such as an obstruction is detected, or safety beam sensors are blocked, the opener will try to close the door up to 5 times. When the obstruction or When the obstruction is cleared or safety beam sensors are unblocked, the opener will close the door when activated.

2. If you would like to disable Auto-Close while it is counting down, press the door control button once. It will disable the Auto-Close for that cycle. Pressing the door control button again will close the door immediately.

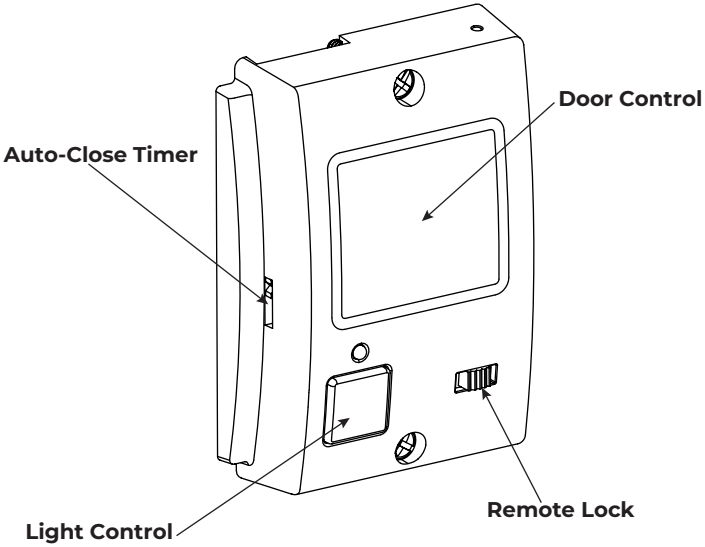

Erase Remote Control / Keypad from Memory

To erase all remote controls and keypads, follow the instructions below.

1. Press and hold the **"⚙"** button for 15 seconds, until the LED display flashes **"E"**, release **"⚙"** button.
2. Press **"⚙"** button once to confirm, the **"E"** will disappear on the LED display. All remote controls and keypads are now erased.
3. Reprogram any remote control/keypad you would like to use.

MAINTENANCE

Perform the following maintenance tasks monthly to ensure garage door opener operates smoothly.

- Test the safety beam sensor and safety reversal system monthly, refer to page 24.
- Open and close door manually to ensure door operates properly.
- Check the balance of the door, if it is unbalanced, contact a trained garage door technician.
- Lubricate door hardware such as rollers and hinges with lightweight general purpose grease when needed.

Battery Replacement – Keypad

Replace the keypad with one AAA alkaline battery.

1. Undo the screw on the bottom of the keypad and remove the back cover.
2. Replace the battery with one AAA alkaline battery and check the polarities.
3. Secure the plastic housing with the screw on the bottom.

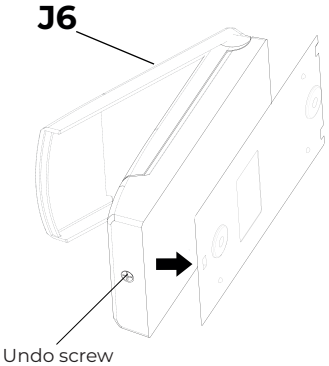

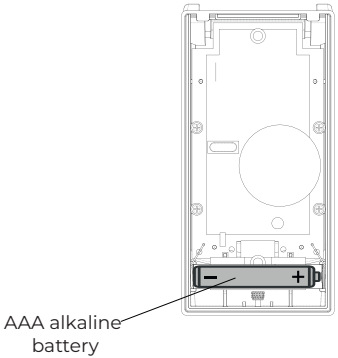

WARNING

To prevent possible serious injury or death:

- Never allow small children near batteries
- If battery is swallowed, notify doctor immediately
- Dispose old batteries promptly and properly

Smartphone Control - Wi-Fi

Smartphone Control allows you to control and monitor your garage door opener with the smartphone app **"Orbit Home"**.

Requirements:

1. 2.4GHz Wi-Fi Network, 802.11 b/g/n in the garage (5GHz network not supported) with broadband internet connection.
2. Password for Wi-Fi Network.
3. Mobile device with **iOS** or **Android** with **Orbit Home App**.

To setup Wi-Fi adapter:

1. Red LED on the right side of the LED display should be steadily on.
2. Download the app from either **iOS App Store** or **Google Play Store**, **"Orbit Home"**.
3. Setup your account and add the garage door opener following the instructions on the **Orbit Home app**.

The garage door opener will emit a beeping and flashing alert when closing the garage door with the smartphone app. This is a safety feature to alert anyone near the garage that the door is about to close. This alert cannot be disabled. If the garage door cannot be closed completely for any reason, such as obstruction being detected, or safety beam sensors being blocked, the opener will reverse to a fully open position.

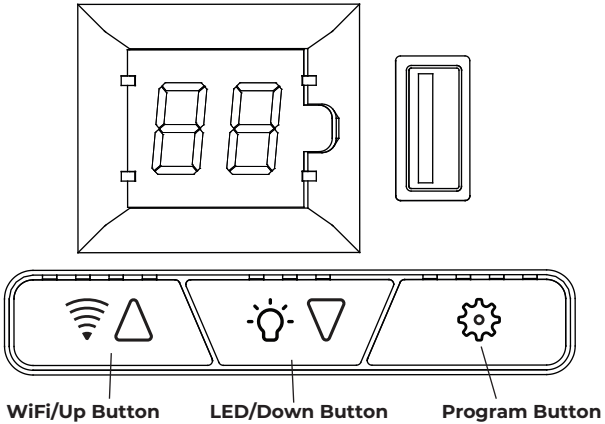

Wi-Fi Adapter LED Indication

LED	STATUS
Red On Steadily	Powered but not connected to Wi-Fi
Red Flashing	Advanced Wi-Fi Setup
Blue On Steadily	Connected to Wi-Fi
Blue Flashing	Quick Connect Wi-Fi Setup
Red – Blue Alternating Flashing Continuously	Connected to home network but not internet server.

TROUBLESHOOTING - ERROR CODE

LED LIGHT FLASHING	LED DISPLAY	SYMPTOM	SOLUTION
10 Flashes	b	**Safety Beam Sensors not functioning properly when door is closing.**	- Check safety beam sensors alignment. - Check for any obstacles blocking safety beam path. - Check sensors LEDs to troubleshoot further. Refer to "Aligning the safety beam sensor s" on Page 21.
15 Flashes	F	**Door is not fully closed or fully open because force exceeded the limit.**	- Check operating condition of the door, ensure the door can operate smoothly. - Re-program travel limits if problem persists.
3 Flashes	L	**The door control is in lock mode, remote and keypad cannot function.**	Unlock "Remote Lock" on the door control.
Continuous Flashing	C	**Door control wires are shorted.**	Check the door control wiring, ensure the 2 wires are not shorted on both ends, the door control terminal and the door opener terminal.
5 Flashes	0	**Door open or close cycle exceeds 30 seconds.**	- This is a safety requirement to prevent a door open/close cycle exceeding 30 seconds. - Check door for binding, lubricate rollers and/or hinges. - Check operating condition of the door, ensure door is balanced properly. Contact a trained garage door technician for service if needed.

TROUBLESHOOTING

SYMPTOM	SOLUTION
Opener works from door control, but not remote control.	1. Ensure Remote Lock on the Deluxe Wall Console is disabled. 2. Reprogram the remote. 3. Replace remote battery.
Door reverses after it's completely closed.	1. Check for any obstacles on the ground in the path of the door stopping the door from closing completely. 2. Re-program the down travel limit to avoid door closing too far down. Refer to "Programming the travel limits" on Page 22 to set the travel limit.
Door opener runs very slow.	Check operating condition of the door, ensure the door is balanced properly. Contact a trained garage door technician for service if needed.
Door will not close and LED display shows "b".	"b" indicates safety beam sensor is blocked while door is closing. Check the following: 1. Ensure the safety beam sensors are installed and wired properly. Refer to "Aligning the safety beam sensors" on Page 21. 2. Ensure both red and blue LED on the safety beam sensors are steadily on. Refer to "Aligning the safety beam sensors" on Page 21 to check the LED status and sensor alignment. 3. If the problem persists and the door will not close, the opener can be forced to close by pressing and holding the door control button until the door is completely closed. CAUTION: Keep garage door in sight until the door is fully closed, then release the door button.
Door will not close and LED display shows "F"	1. Check door for binding, lubricate rollers and/or hinges if needed. Refer to "Maintenance" on Page 31. 2. Check operating condition of the door, ensure the door is balanced properly. Contact a trained garage door technician for service if needed.
When opener is activated, motor moves but door does not.	Ensure the motor is connected to the coupler Refer to "Manually Open / Close Garage Door" on Page 25 to connect the motor properly.
Door will not close completely or reverse in winter time.	Check for any snow/ice accumulated at the bottom of the door or on the floor ccausing the door to not close completely. Remove snow/ice if necessary.

WARNING

IMPORTANT SAFETY INSTRUCTIONS

To reduce the risk of severe injury or death, read all instructions carefully.

1. READ AND FOLLOW ALL INSTRUCTIONS.
2. Never let children operate or play with door controls. Keep the remote control away from children.
3. Always keep the moving door in sight and away from people and objects until it is completely closed. NO ONE SHOULD CROSS THE PATH OF THE MOVING DOOR.
4. NEVER GO UNDER A STOPPED, PARTIALLY OPENED DOOR.
5. Test door opener monthly. The garage door MUST reverse on contact with a 38-mm (1-1/2 inch) high object (or a 2x4 board laid flat) on the floor. After adjusting either the force or the limit of travel, retest the door opener. Failure to adjust the opener properly increases the risk of severe injury or death.
6. When possible, use the emergency release handle to disengage trolley ONLY when garage door is CLOSED. Use caution when using this release with the door open. Weak or broken springs are capable of increasing the rate of door closure and increasing the risk of severe injury or death.
7. KEEP GARAGE DOORS PROPERLY BALANCED. See user's manual. An improperly balanced door increases the risk of severe injury or death. Have a qualified service person make repairs to cables, spring assemblies, and other hardware.
8. This operator system is equipped with an unattended operation feature. The door could move unexpectedly. NO ONE SHOULD CROSS THE PATH OF THE MOVING DOOR.

SAVE THESE INSTRUCTIONS

FCC

This device complies with Part 15 of the FCC Rules. Operation is subject to the following two conditions: (1) This device may not cause harmful interference and (2) This device must accept any interference received, including interference that may cause undesired operation.

Any Changes or modifications not expressly approved by the party responsible for compliance could void the user's authority to operate the equipment.

This equipment complies with FCC radiation exposure limits set forth for an uncontrolled environment. This equipment should be installed and operated with minimum distance 20cm between the radiator & your body.

NOTE.

This equipment has been tested and found to comply with the limits for a Class B digital device, pursuant to Part 15 of the FCC Rules.
These limits are designed to provide reasonable protection against harmful interference in a residential installation. This equipment generates, uses and can radiate radio frequency energy and, if not installed and used in accordance with the instructions, may cause harmful interference to radio communications.

However, there is no guarantee that interference will not occur in a particular installation. If this equipment does cause harmful interference to radio or television reception, which can be determined by turning the equipment off and on, the user is encouraged to try to correct the interference by one or more of the following measures:

Reorient or relocate the receiving antenna.
Increase the separation between the equipment and receiver.
Connect the equipment into an outlet on a circuit different from that to which the receiver is connected.
Consult the dealer or an experienced radio / TV technician for help.

ISED

This device contains licence-exempt transmitter(s)/receiver(s) that comply with Innovation, Science and Economic Development Canada's licence-exempt RSS(s). Operation is subject to the following two conditions:
(1) This device may not cause interference.
(2) This device must accept any interference, including interference that may cause undesired operation of the device.
L'émetteur/récepteur exempt de licence contenu dans le présent appareil est conforme aux
CNR d'Innovation, Sciences et Développement économique Canada applicables aux appareils radio exempts de licence. L'exploitation est autorisée aux deux conditions suivantes :
1) L'appareil ne doit pas produire de brouillage;
2) L'appareil doit accepter tout brouillage radioélectrique subi, même si le brouillage est susceptible d'en compromettre le fonctionnement.
This transmitter must not be co-located or operating in conjunction with any other antenna or transmitter.Cet émetteur ne doit pas être colocalisé ou fonctionner en conjonction avec une autre antenne ou un autre émetteur.
The device meets the exemption from the routine evaluation limits in section 2.5 of RSS-102 and compliance with RSS-102 RF exposure, users can obtain Canadian information on RF exposure and compliance. This equipment should be installed and operated with a minimum distance of 20 centimeters between the radiator and your body.
Le dispositif rencontre l'exemption des limites courantes d'évaluation dans la section 2.5 de RSS 102 etla conformité à l'exposition de RSS-102 rf, utilisateurs peut obtenir l'information canadienne surl'exposition et la conformité de rf.
Cet émetteur ne doit pas être Co-placé ou ne fonctionnant en même temps qu'aucune autre antenne ouémetteur. Cet équipement devrait être installé et actionné avec une distance minimum de 20 centimètres entre le radiateur et votre corps.

SKYLINK LIMITED WARRANTY

WARRANTY ON SKYLINK GARAGE DOOR OPENER

LIMITED WARRANTY TO ORIGINAL CONSUMER PURCHASER WITH PROOF OF PURCHASE

This SKYLINK brand product, as supplied and distributed by SKYLINK and delivered new, in the original carton to the original consumer purchaser (not transferable or assignable), is warranted by SKYLINK against manufacturing defects in materials or workmanship for the limited warranty period of:

WARRANTY PERIOD	
Motor	Lifetime
Chain	Lifetime
Belt	Lifetime
Parts	5 Year
Accessories	1 Year
Battery Backup	1 Year

This limited warranty is valid only on products purchased and used in the United States / Canada that have been installed, operated, and maintained according to the instructions attached to or furnished with the product. To receive warranty service, the purchaser must contact SKYLINK at the address or phone number provided below for problem determination and service procedures. Purchaser will be advised of disassembly and shipping instructions, then send the product or component, pre-paid and insured to SKYLINK. Purchasers must allow SKYLINK a reasonable opportunity to inspect the product claimed to be defective prior to removal or alteration of its condition. The original dated bill of sale must be presented upon request as proof of purchase to SKYLINK to receive warranty service. During the applicable warranty period, a product will be repaired, replaced, or the price refunded, at the sole option of SKYLINK. SKYLINK may use new or reconditioned parts in repairing a product or replace the product with a new or reconditioned product. Replacement parts and products are warranted for the remaining portion of the original product's warranty or ninety (90) days, whichever is longer. All replaced parts and products are the property of SKYLINK and you must return them to SKYLINK.

This limited warranty covers manufacturing defects in materials or workmanship encountered in normal residential household, non-commercial use of this product and shall not cover the following: damage that occurs in shipment, delivery, installation, and uses for which this product was not intended; damage caused by unauthorized modification or alteration of the product; product where the original factory serial numbers have been removed, defaced, changed in any way, or cannot be readily determined; cosmetic damage including scratches, dents, chips, and other damage to the product's finishes; damage caused by abuse, misuse, pest infestations, accident, fire, floods, or other acts of nature or God; damage caused by use of equipment, utilities, services, parts, supplies, accessories, applications, installations, repairs, external wiring or connectors not supplied or authorized by SKYLINK; damage caused by incorrect electrical line current, voltage, fluctuations and surges; damage caused by failure to operate and maintain the product according to instructions; in-home instruction on how to use your product; and service to correct installation not in accordance with electrical codes or correction of household electrical (i.e., house wiring, fuses); and does not cover batteries, missing or damaged parts from clearance or open box sales. The cost of repair or replacement under these excluded circumstances shall be the customer's responsibility.

EXCLUSION OF IMPLIED WARRANTIES

IMPLIED WARRANTIES, INCLUDING THE IMPLIED WARRANTIES OF MERCHANTABILITY OR FITNESS FOR A PARTICULAR PURPOSE, ARE LIMITED TO ONE YEAR OR THE SHORTEST PERIOD ALLOWED BY LAW.

Some states and provinces do not allow limitations on how long an implied warranty lasts, so the above limitations or exclusions may not apply to you. This limited warranty gives you specific rights, and you may also have other rights, which vary from state to state and province to province.

LIMITATION OF REMEDIES YOUR SOLE AND EXCLUSIVE REMEDY IS PRODUCT REPAIR, PRODUCT REPLACEMENT, OR REFUND OF THE PURCHASE PRICE AT SKYLINK'S OPTION, AS PROVIDED IN THIS LIMITED WARRANTY. SKYLINK SHALL NOT BE LIABLE FOR SPECIAL, INCIDENTAL, OR CONSEQUENTIAL DAMAGES, INCLUDING BUT NOT LIMITED TO TIME AWAY FROM WORK, HOTELS AND/OR RESTAURANT MEALS, REMODELING EXPENSES, LOSS OF REVENUE OR PROFITS, FAILURE TO REALIZE SAVINGS OR OTHER BENEFITS REGARDLESS OF THE LEGAL THEORY ON WHICH THE CLAIM IS BASED, AND EVEN IF SKYLINK HAS BEEN ADVISED OF THE POSSIBILITY OF SUCH DAMAGES.

Some states and provinces do not allow exclusion or limitation of incidental or consequential damages, so the above limitations or exclusions may not apply to you. This warranty gives you specific rights, and you may also have other rights, which vary from state to state and province to province. SKYLINK does not warrant the uninterrupted or error-free operation of the product. No warranty or guarantee given by any other person, firm, or corporation with respect to this product shall be binding on SKYLINK.To obtain warranty service, please contact SKYLINK at:

1-800-304 1187

support@skylinkhome.com

P/N: 101Y684-001

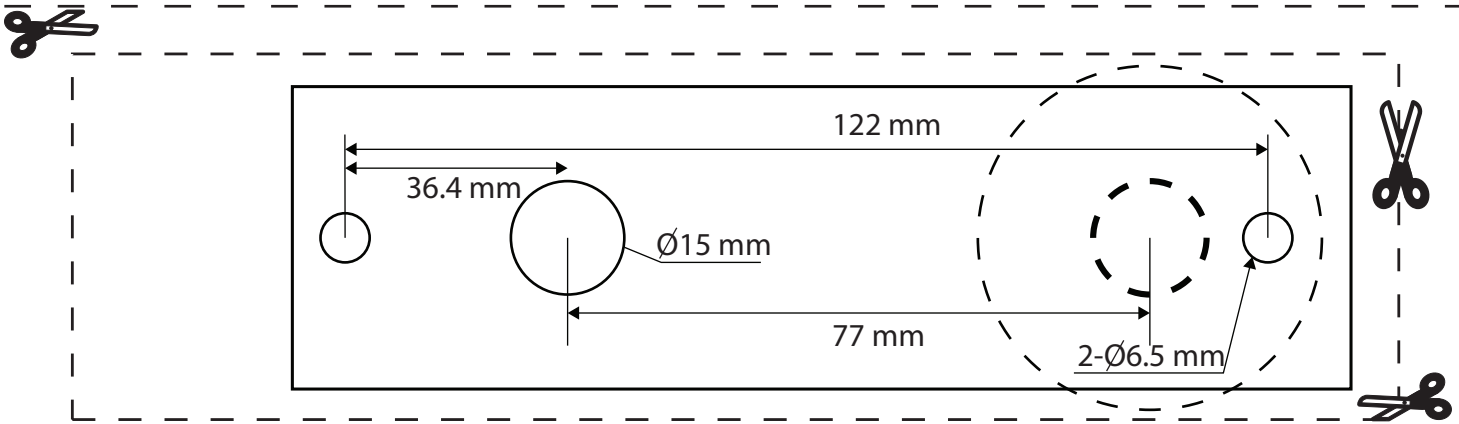
122 mm
36.4 mm
Ø15 mm
77 mm
2-Ø6.5 mm

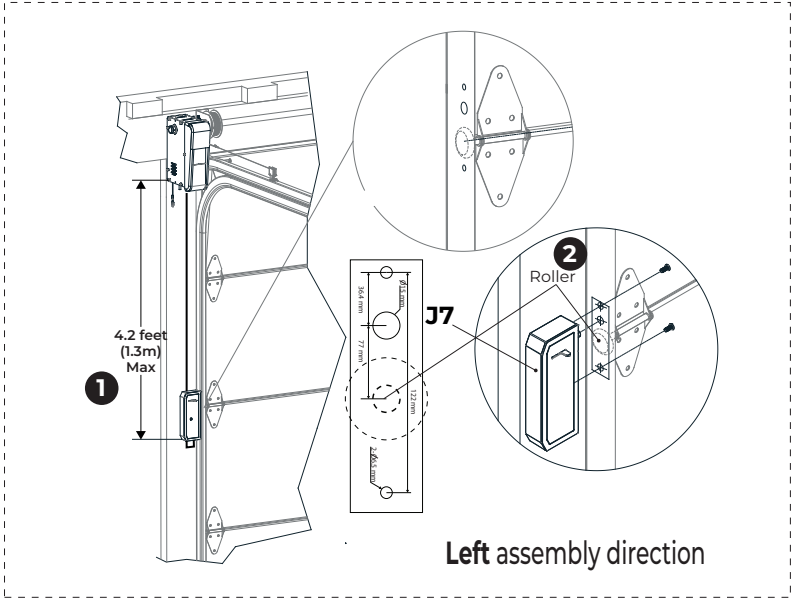
4.2 feet
(1.3m)
Max
1
2
Roller
J7
Left assembly direction

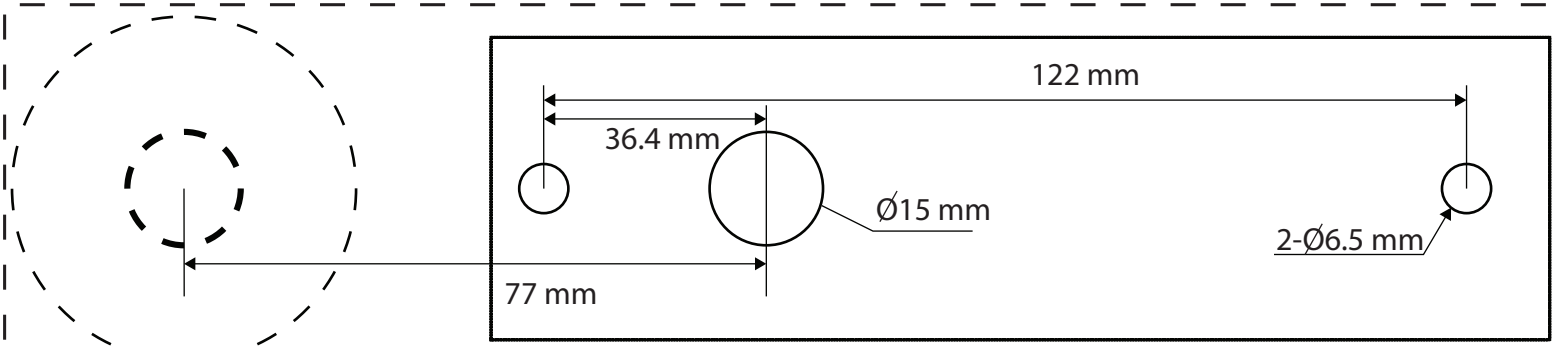
122 mm
36.4 mm
Ø15 mm
2-Ø6.5 mm
77 mm

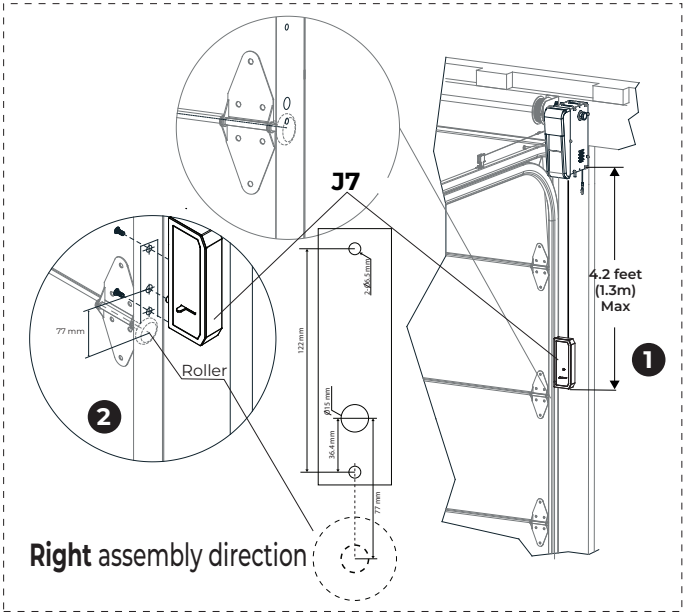
J7
4.2 feet
(1.3m)
Max
1
2
Roller
77 mm
122 mm
2-Ø6.5 mm
Ø15 mm
36.4 mm
77 mm
Right assembly direction