Phonak PartnerMic

User Guide

A Sonova brand

PHONAK
life is on

Contents

1. Welcome 4
2. Getting to know your PartnerMic 5
   2.1 Device description 8
3. Getting started 8
   3.1 Charging the battery 10
   3.2 Switching on and off 11
   3.3 Connecting the PartnerMic to hearing aids 12
   3.4 Streaming stability note 15
4. Daily use of the PartnerMic 17
   4.1 How to wear 18
   4.2 Understanding the indicator light (LED) 18
   4.3 Adjusting the volume 19
5. Troubleshooting 20
6. Service and warranty 20
   6.1 Local warranty 21
   6.2 International warranty
   6.3 Warranty limitation
7. Compliance information
8. Information and explanation of symbols
9. Important safety information

For detailed information on xxxxxxxx such as features, indicator light explanations etc, please refer to the corresponding user guides.

1. Welcome

Congratulations on choosing the PartnerMic, a quality product developed by Phonak, one of the world's leading companies in the field of hearing technology.

Please read this user guide carefully to discover how to benefit from the features of your PartnerMic.

If you have any questions, please consult your hearing care professional or go to www.phonak.com

Phonak – life is on www.phonak.com

CE mark applied: 2018

2. Getting to know your PartnerMic

The PartnerMic is worn in lapel mode by a speaking partner. It picks up the voice and streams the sound directly into both of your Phonak Marvel hearing aids.

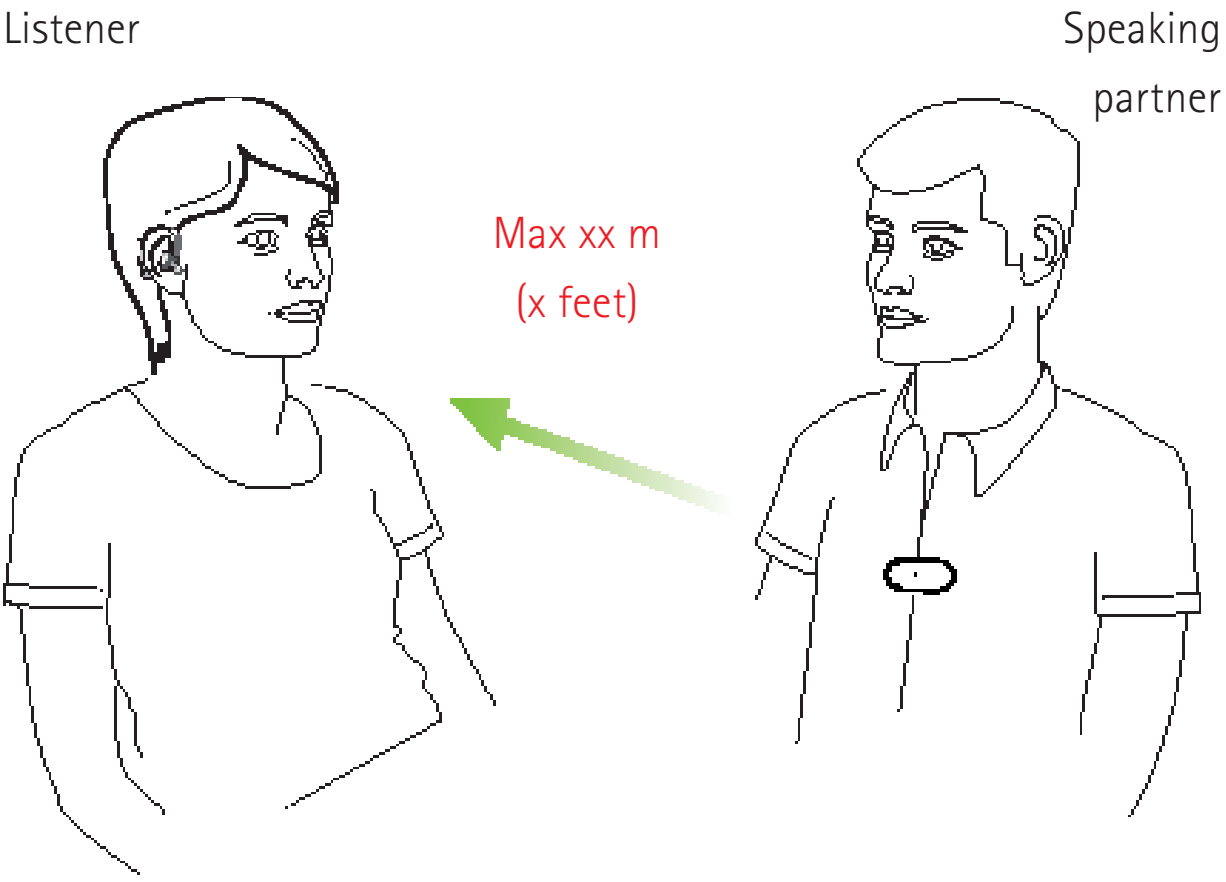

2.1 Device description

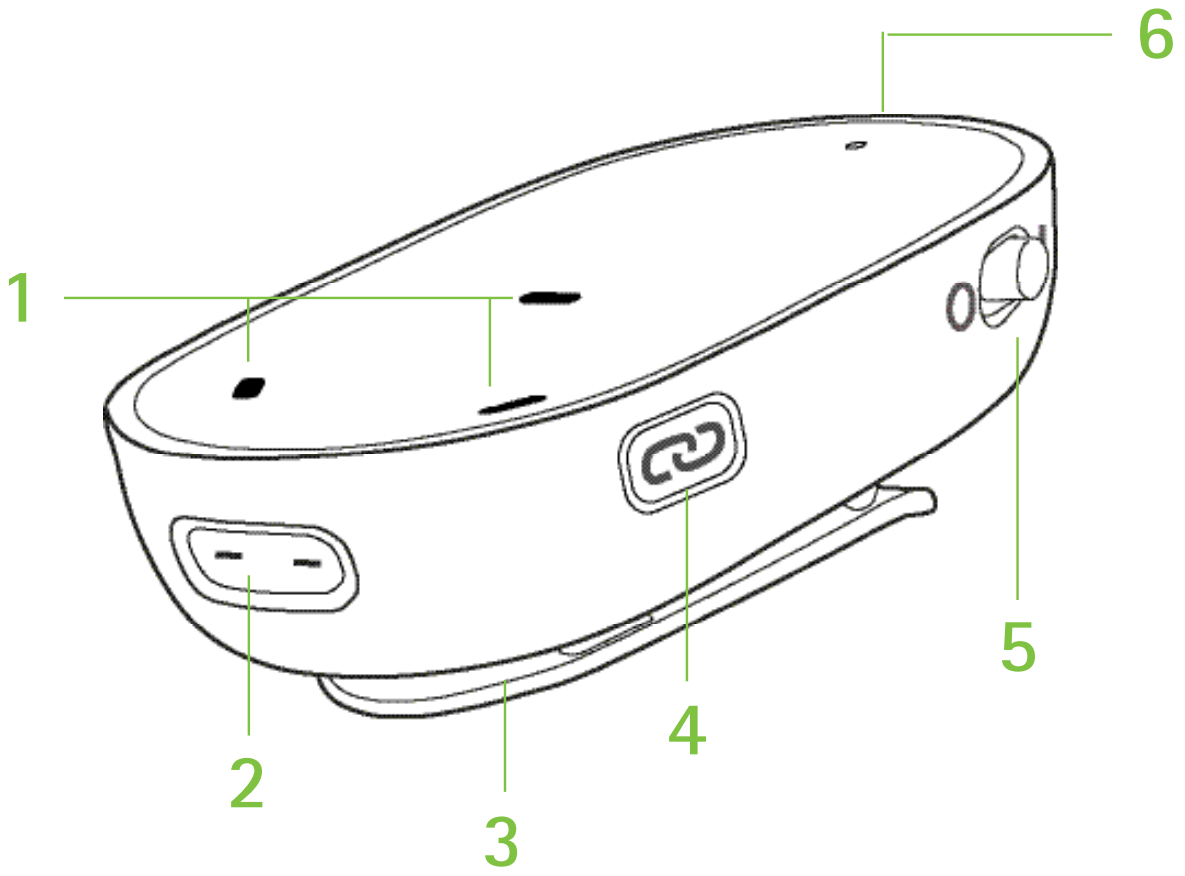

1 Microphone openings
2 Charging input
3 Clip
4 Connect button
5 Power switch On/Off
6 Indicator light

Accessories

(content may vary depending on country)

- USB Type-C cable
- Lanyard
- Protective bag
- 12 V car charger adapter (optional)

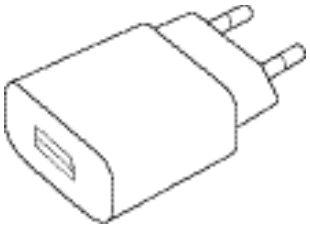

Illu_power_supply_USB_EU_outline.eps

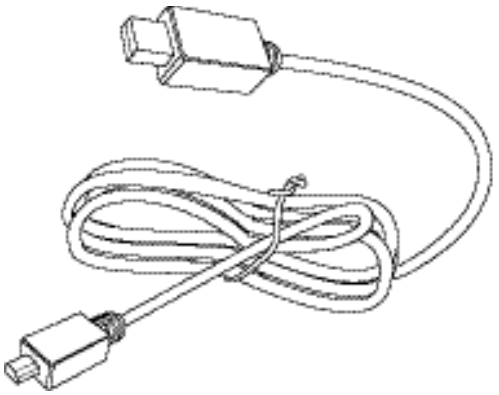

Illu_cable_micro_USB_outline.eps
(will be adjusted to show USB C)

Illu_Roger_Neckholder.eps
(will be adapted to new illu manner)

3. Getting started

3.1 Charging the battery

Your PartnerMic has a built-in, non-removable, rechargeable battery.

ⓘ When charging your PartnerMic for the first time, let it charge for at least 2 hours, even if the indicator light is not lit or turns green.

To charge it:

- Plug the power supply into a power socket
- Plug the USB plug into the PartnerMic charging input
- The typical charging time is 2 hours
- Charging is complete when the indicator light turns solid green

ⓘ Your PartnerMic will be turned off while charging.

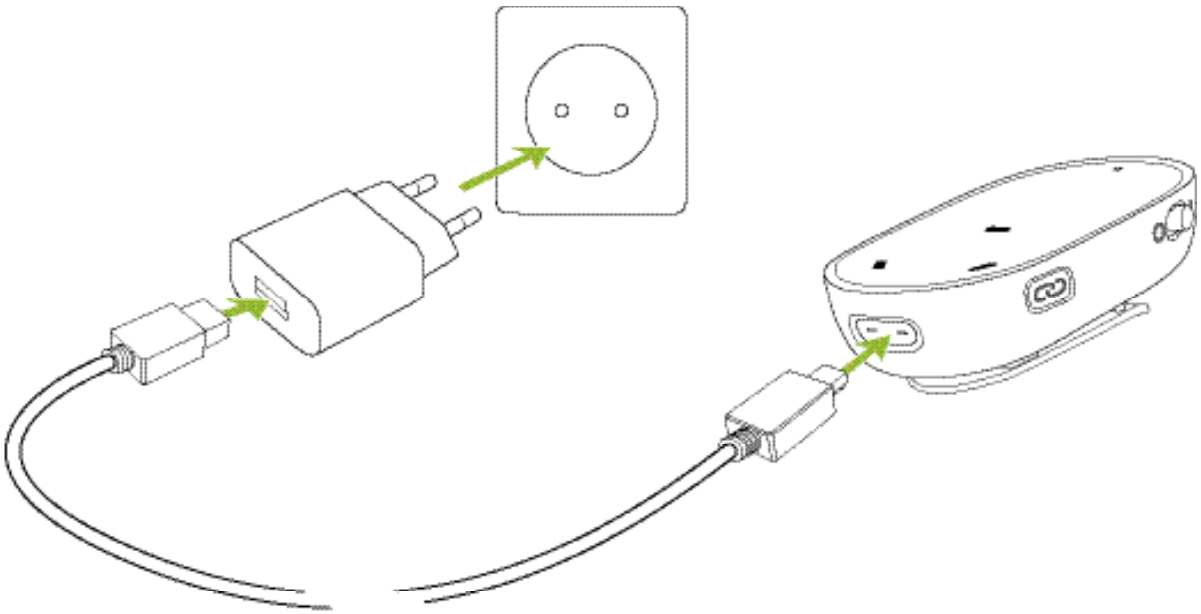

3.2 Switching on and off

Slide the power switch to turn the PartnerMic on or off. Switch it off when not in use.

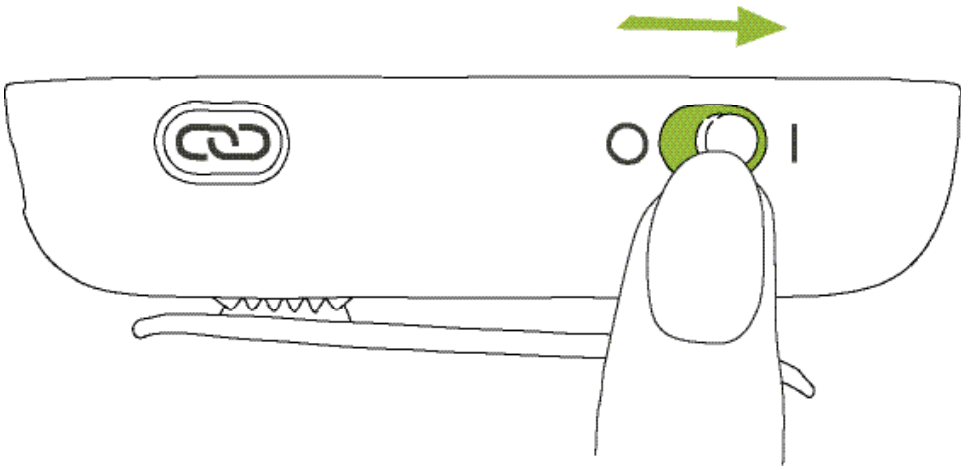

3.3 Connecting the PartnerMic to the hearing aids

The PartnerMic needs to be connected to you hearing aids before use. If the PartnerMic has not been connected to a hearing aid previously it will automatically enter connection mode at start up and blink blue.

ⓘ If you have received the PartnerMic and the hearing aids in a set, they are already connected.

To connect:

- Place the PartnerMic within 10 cm (4 inches) range from the hearing aid
- Connection is complete when the indicator light turns green

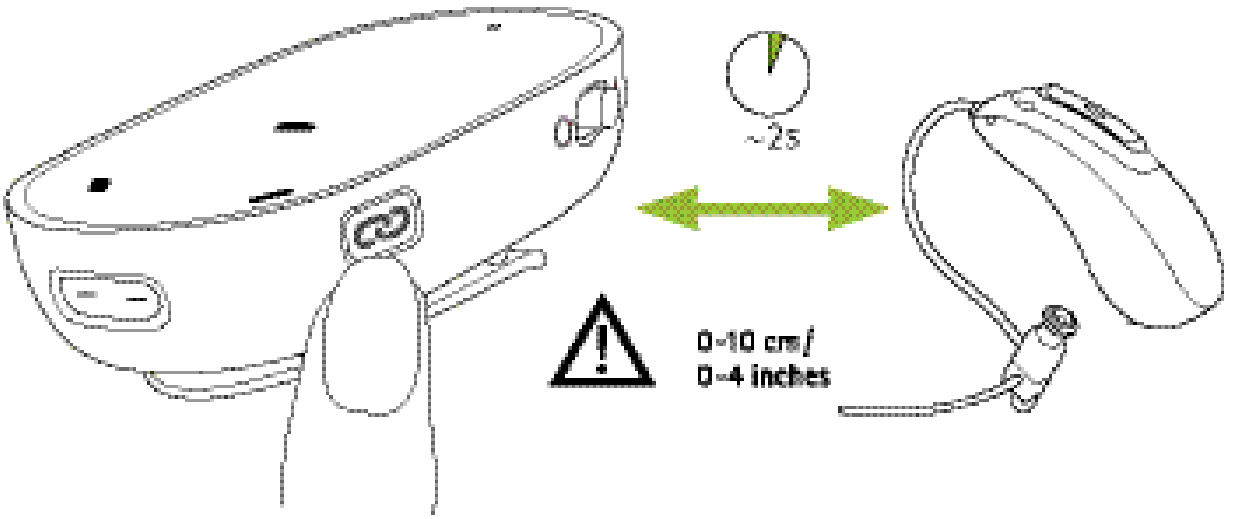

ⓘ If your hearing hearing aids are linked only one device needs to be connected. The second device will be connected automatically.

ⓘ You only have to connect the devices once. They will remain connected after being turned off and on again.

If you want to redo the connection procedure you can manually activate the connection mode by pressing the connect button.

To reconnect:

- Place the PartnerMic within 10 cm (4 inches) range from the hearing aid
- Press the Connect button
- Connection is complete when the indicator light turns green

ⓘ Once successfully connected, any previously connected hearing aid will be diconnected.

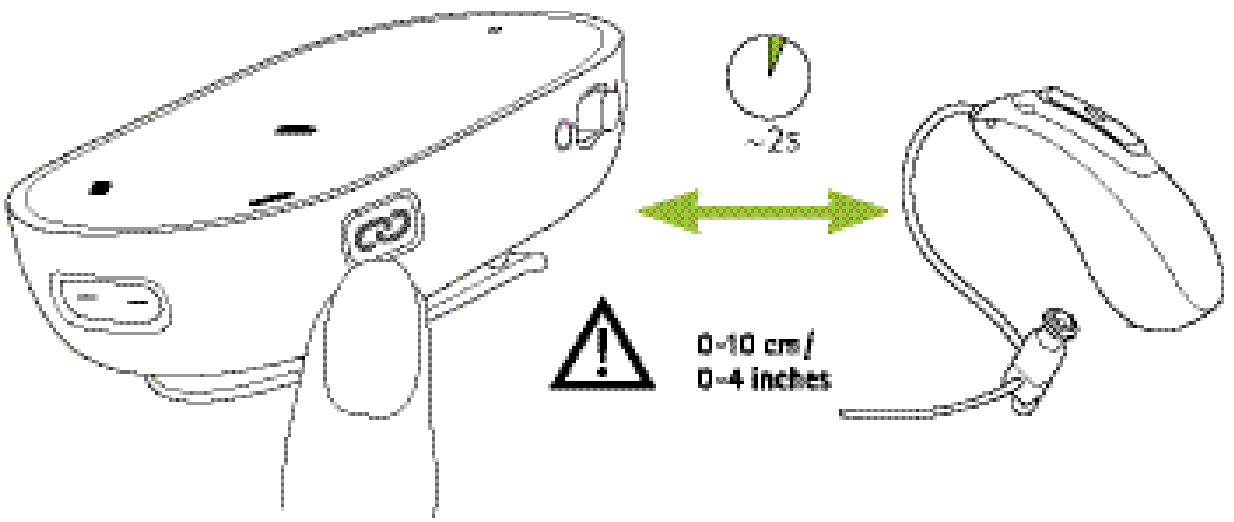

3.4 Streaming stability note

The PartnerMic operates up to a range of 10 meters (30 ft). Line of sight between the PartnerMic and the hearing aids is not required.

The range may be reduced when the signal is obstructed by obstacles such as walls, furniture or the human body.

If the hearing aids are out of range of the PartnerMic the audio transmission will be terminated. Once the hearing aids are back into the range of the PartnerMic, the audio signal will automatically resume streaming.

4. Daily use of the PartnerMic

4.1 How to wear

The PartnerMic is worn by the speaking partner, attached with a clip or hanging in a lanyard.

With a clip:

- Gently press to open the cli
- Ensure the PartnerMic is clipped securely to clothing

With a lanyard:

- Attach the lanyard to the cl
- Put the lanyard around the neck

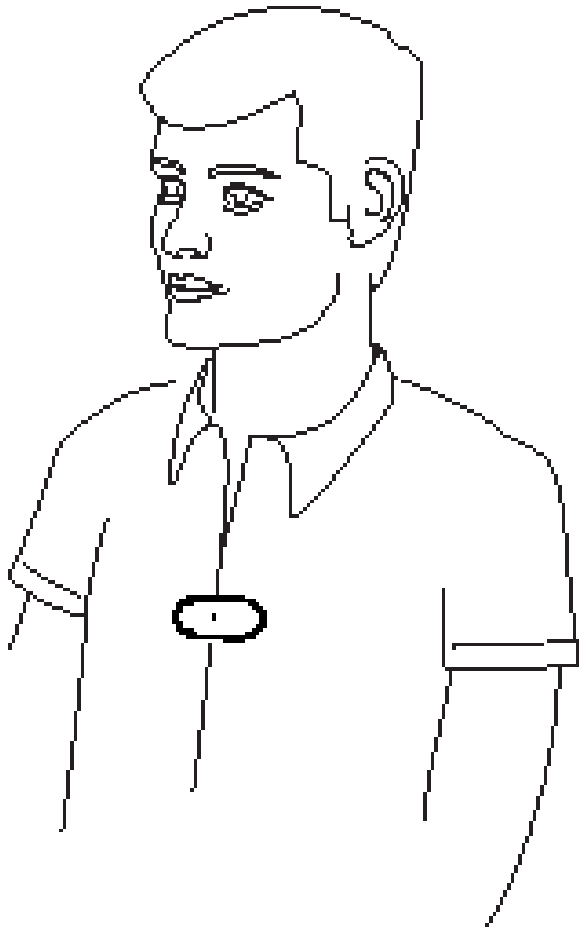

Positioning of the PartnerMic

- For optimal performance, place the PartnerMic 20 cm (8") below the wearer's mouth
- If the clip cannot be fastened to clothing use the suppied lanyard to atttach the microphone.
- A distance of 50 cm (20") should not be exceeded
- To prevent scraping sounds, do not cover the PartnerMic with clothing during use

4.2 Understanding the indicator light (LED)

During operation

3s green	Switching on
Blinking red	Low battery
Blinking blue	Connecting mode
5s red	Connection failed
Solid red	Device error

During Charging

Blinking green	Charging
Solid green	Charging complete

4.3 Adjusting the volume

The volume of the PartnerMic can be adjusted from the Phonak Remote app, available for both Android and IOS.

5. Troubleshooting

A summary of frequently asked questions and answers:

Causes	What to do
I don't hear any sound from the PartnerMic	
• One or all devices are switched off	• Make sure all devices are turned on and fully operational
• The distance between the PartnerMic and the hearing aids is too great	• Bring the devices closer to each other, 20 meters (60 ft) is the maximum outdoors. To avoid streaming interruptions, make sure you wear the streamer correctly and keep the RemoteMic within the operating range
• An obstacle is preventing trans-mission	• Depending on the material (e.g. the human body), line of sight may be necessary

Causes	What to do
I hear breakup during audio transfer	
• The PartnerMic device is too far away from the hearing aid or shielded by an obstacle (e.g. human body)	• Do not exceed the maximum distance and adjust the device orientations
The volume during streaming is not comfortable (too low or too high)	
• The volume levels are not set correctly	• Adjust the volume using the RemoteMic and the streamer's volume buttons
There is too much noise, I cannot understand the speaker	
• Your hearing aid microphones are set too high	• Reduce the hearing aid volume by a long press of streamer button • Place the RemoteMic closer to the mouth of the speaker (20 cm, 8") • Use the RemoteMic button to increase the volume of the RemoteMic
• The PartnerMic rubs against the wearer's clothing	• Make sure the PartnerMic is clipped on firmly. Clothing should not cover the PartnerMic
• The settings of your hearing aids are not right	• Please ask your hearing care professional to finetune your hearing aids

Causes	What to do
I see a rapidly blinking blue indicator light on the RemoteMic	
• xxxxxxxxx	• xxxxxxxxx
Indicator lights are solid blue but I cannot hear the RemoteMic	
• xxxxxxxxx	• xxxxxxxxx
The charging time is longer than usual	
• xxxxxxxxx	• xxxxxxxxx

6. Service and warranty

6.1 Local warranty

Please ask the hearing care professional, where you purchased your devices, about the terms of the local warranty.

6.2 International warranty

Phonak offers a one year limited international warranty, valid as of the date of purchase. This limited warranty covers manufacturing and material defects. The warranty is valid only if proof of purchase is shown.

The international warranty does not affect any legal rights that you might have under applicable national legislation governing sale of consumer goods.

6.3 Warranty limitation

This warranty does not cover damage from improper handling or care, exposure to chemicals, immersion in water or undue stress. Damage caused by third parties or non-authorized service centers renders the warranty null and void. This warranty does not cover any services performed by a hearing care professional in his/her office.

Serial number:

_____

Authorized hearing care professional (stamp/signature):

Date of purchase:

_____

_____

Chapter 7-9 is based on the TV Connector UG

7. Compliance information

Europe:

Declaration of Conformity

Hereby Sonova AG declares that this product is in compliance with the essential requirements of the Radio Equipment Directive 2014/53/EU. The full text of the Declaration of Conformity can be obtained from the manufacturer or the local representative whose address can be taken from www.phonak.com

Operation frequency: 2400 - 2483.5 MHz

Power level: <20 mW conducted power

Australia/New Zealand:

R-NZ

Indicates a device's compliance with applicable Radio Spectrum Management's (RSM) and Australian Communications and Media Authority (ACMA) regulatory arrangements for the legal sale in New Zealand and Australia.

The compliance label R-NZ is for radio products supplied in the New Zealand market under conformity level A1.

Notice 1:

This device complies with Part 15 of the FCC Rules and with Industry Canada's license – exempt RSSs. Operation is subject to the following two conditions:

1) this device may not cause harmful interference, and
2) this device must accept any interference received, including interference that may cause undesired operation.

Notice 2:

Changes or modifications made to this device not expressly approved by Sonova AG may void the FCC authorization to operate this device.

Notice 3:

This device has been tested and found to comply with the limits for a Class B digital device, pursuant to Part 15 of the FCC Rules and ICES-003 of Industry Canada.

These limits are designed to provide reasonable protection against harmful interference in a residential installation. This device generates, uses and can radiate radio frequency energy and, if not installed and used in accordance with the instructions, may cause harmful interference to radio communications. However, there is no guarantee that interference will not occur in a particular installation. If this device does cause harmful interference to radio or television reception, which can be determined by turning the equipment off and on, the user is encouraged to try to correct the interference by one or more of the following measures:

- Reorient or relocate the receiving antenna of the TV or alternative audio source.
- Increase the separation between the device and receiver.
- Connect the device into an outlet on a circuit different from that to which the receiver is connected.
- Consult the dealer or an experienced radio/TV technician for help.

Notice 4:

Japanese Radio Law Compliance

This device is granted pursuant to the Japanese Radio Law (電波法). This device should not be modified (otherwise the granted designation number will become invalid)."

More details can be found in the data sheet which can be downloaded from www.phonak.com

Notice 5:

FCC/Industry Canada RF Radiation Exposure Statement

This equipment complies with FCC/Industry Canada RF radiation exposure limits set forth for an uncontrolled environment.

This equipment should be installed and operated with a minimum distance of 20 cm between the radiator and your body.

This transmitter must not be co-located or operating in conjunction with any other antenna or transmitter.

8. Information and explanation of symbols

CE	The CE symbol is confirmation by Sonova AG that this product meets the requirements as the Radio Equipment Directive 2014/53/EU.
	This symbol indicates that it is important for the user to read and take into account the relevant information in this user guide.
	Indicates the device manufacturer.
	This symbol indicates that it is important for the user to pay attention to the relevant warning notices in this user guide.
	Important information for handling and product safety.

Operating conditions	The device is designed such that it functions without problems or restrictions if used as intended, unless otherwise noted in this user guide.
	Temperature transport and storage: –20° to +60° Celsius (–4° to +140° Fahrenheit). Temperature operation: 0° to +40° Celsius (+32° to +104° Fahrenheit).
	Keep dry.

	The device is designed for Direct Current (DC) power source with the specified parameters defined on the label of the product.
	Humidity during transportation and storage: <90% (non-condensing). Humidity operation: <90% (noncondensing).
	Atmospheric pressure: 500 hPa to 1500 hPa.
	This symbol on the product or its packaging means that it should not be disposed of with your other household waste. It is your responsibility to dispose of your waste equipment separately from the municipal waste stream. The correct disposal of your old appliance will help prevent potential negative consequences for the environment and human health.

9. Important safety information

Please read the information on the following pages before using your device.

Hazard warnings

⚠ This device is not for children below 36 months. It contains small parts that can cause choking, if swallowed by children. Keep out of reach of children and mentally challenged people or pets. If swallowed, consult a physician or hospital immediately.

⚠ PartnerMic may generate magnetic fields. If any influence of the PartnerMic on the Implantable Device (e.g. pacemakers, defibrillators, etc.) is experienced, stop using the PartnerMic and contact your doctor and /or the manufacturer of the Implantable device for advice.

⚠ Use only hearing aids that have been specially programmed for you by your hearing care professional.

⚠ Dispose of electrical components in accordance with your local regulations.

⚠ Changes or modifications to any of the devices that were not explicitly approved by Sonova AG are not permitted.

⚠ External devices may only be connected if they have been tested in accordance with the relevant standards IEC 60601-1, IEC 60065, IEC 60950-1, IEC 62368-1 or other applicable safety standards. Only use accessories approved by Sonova AG.

⚠ For safety reasons, only use chargers supplied by Sonova AG.

⚠ Do not use the device in explosive areas (mines or industrial areas with danger of explosions, oxygen rich environments or areas where flammable anesthetics are handled) or where electronic equipment is prohibited.

⚠ Opening the device might damage it. If problems occur which cannot be resolved by following the remedy guidelines in the troubleshooting section of this user guide, consult your hearing care professional.

⚠ Lanyard shall not be used if there is a risk of getting stuck, e.g. in a machine or other objects.

Product safety information

ⓘ Protect the device connectors, plugs, power supply from dirt and debris.

ⓘ Do not use excessive force when connecting your device to its different cables.

ⓘ Protect the device from excessive dust, moisture (bathing or swimming areas) and heat sources (radiator). Protect the device from excessive shock and vibration.

ⓘ Clean the device using a damp cloth. Never use household cleaning products (washing powder, soap, etc.) or alcohol to clean them. Never use a microwave or other heating devices to dry the device.

ⓘ X-ray radiation, CT or MRI scans may destroy or adversely affect the correct functioning of the device.

ⓘ If the device has been dropped or damaged, if it overheats, has a damaged cord or plug, or has been dropped into liquid, stop using your device and contact authorized service centre.

Other important information

ⓘ High-powered electronic equipment, larger electronic installations and metallic structures may impair and significantly reduce the operating range.

Notes

Manufacturer:
Sonova AG
Laubisrütistrasse 28
CH-8712 Stäfa
Switzerland
www.phonak.com

sonova
HEAR THE WORLD

029-0737-02/V1.00/2018-11/cl © 2018 Sonova AG All rights reserved

7 613389 167955