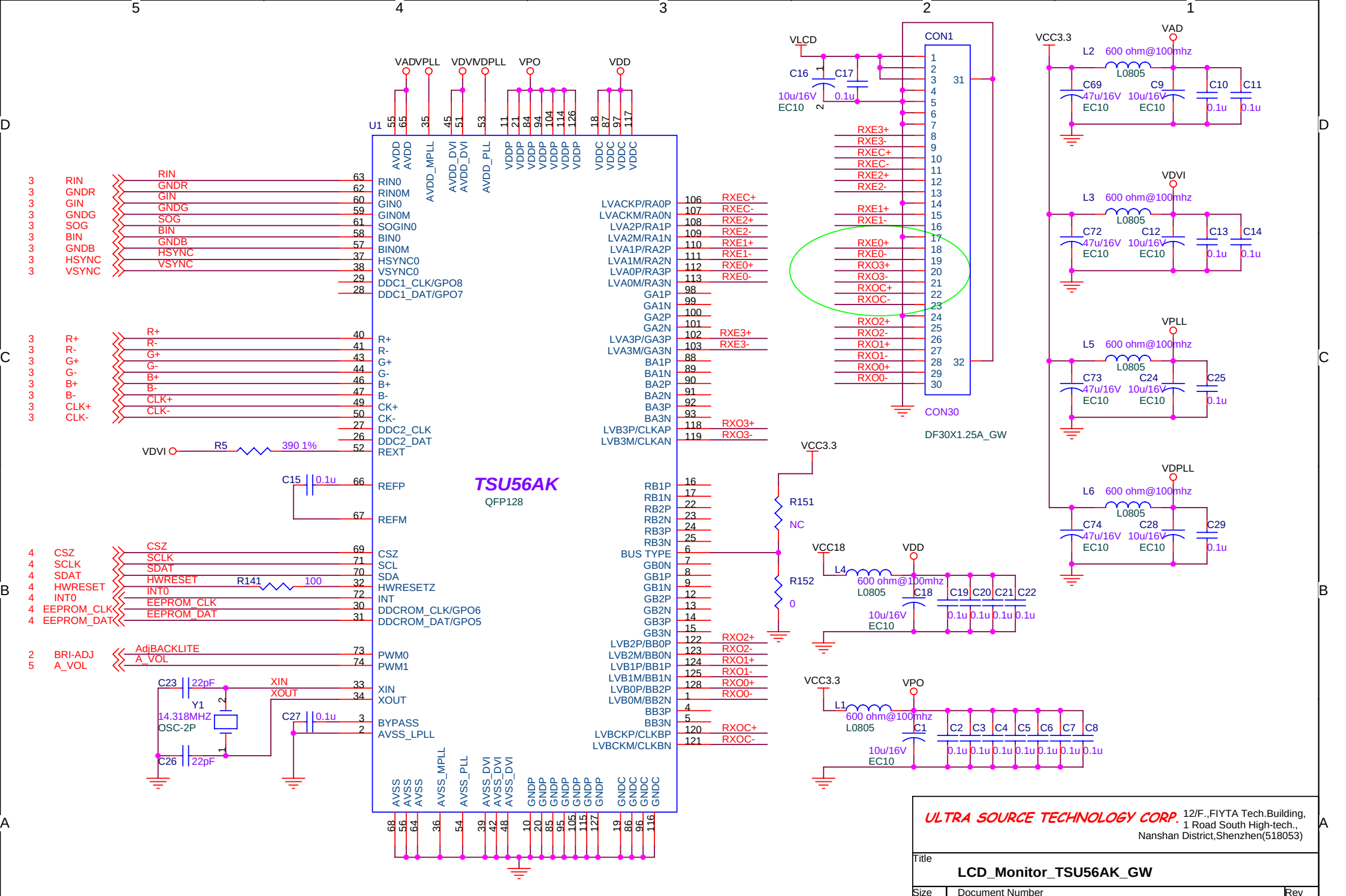
TSU56AK
QFP128
U1
CON1
CON30
DF30X1.25A_GW
VADVPLL
VDVIVDPLL
VPO
VDD
VLCD
VCC3.3
VAD
VDVI
VPLL
VDPLL
VCC18
RIN
GNDR
GIN
GNDG
SOG
BIN
GNDB
HSYNC
VSYNC
R+
R-
G+
G-
B+
B-
CLK+
CLK-
CSZ
SCLK
SDAT
HWRESET
INT0
EEPROM_CLK
EEPROM_DAT
AdjBACKLITE
A_VOL
BRI-ADJ
XIN
XOUT
RXE3+
RXE3-
RXEC+
RXEC-
RXE2+
RXE2-
RXE1+
RXE1-
RXE0+
RXE0-
RXO3+
RXO3-
RXO2+
RXO2-
RXO1+
RXO1-
RXO0+
RXO0-
RXOC+
RXOC-
BUS TYPE
R5 390 1%
R141 100
R151 NC
R152 0
Y1 14.318MHZ OSC-2P
C23 22pF
C26 22pF
C27 0.1u
C15 0.1u
C16 10u/16V EC10
C17 0.1u
L1 600 ohm@100mhz L0805
L2 600 ohm@100mhz L0805
L3 600 ohm@100mhz L0805
L4 600 ohm@100mhz L0805
L5 600 ohm@100mhz L0805
L6 600 ohm@100mhz L0805
C69 47u/16V EC10
C9 10u/16V EC10
C10 0.1u
C11 0.1u
C72 47u/16V EC10
C12 10u/16V EC10
C13 0.1u
C14 0.1u
C73 47u/16V EC10
C24 10u/16V EC10
C25 0.1u
C74 47u/16V EC10
C28 10u/16V EC10
C29 0.1u
C18 10u/16V EC10
C19 0.1u
C20 0.1u
C21 0.1u
C22 0.1u
C1 10u/16V EC10
C2 0.1u
C3 0.1u
C4 0.1u
C5 0.1u
C6 0.1u
C7 0.1u
C8 0.1u
ULTRA SOURCE TECHNOLOGY CORP.
12/F.,FIYTA Tech.Building,
1 Road South High-tech.,
Nanshan District,Shenzhen(518053)
Title
LCD_Monitor_TSU56AK_GW
Size A4
Document Number
Scaler(TSU56AK)
Design By:Erwin.Mu
Rev 1.0
Date: Tuesday, March 08, 2005
Sheet 1 of 5

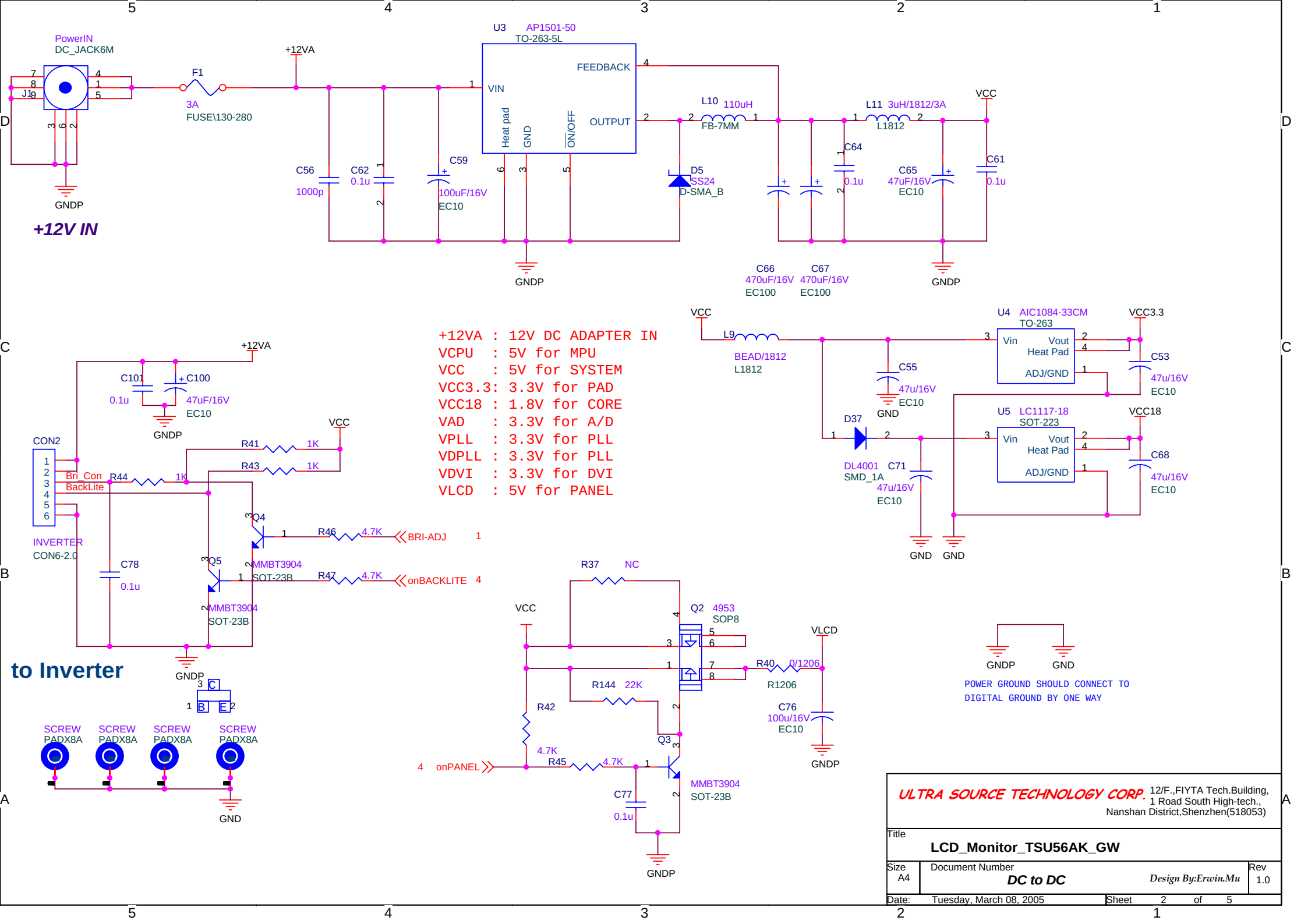
PowerIN
DC_JACK6M
J1
GNDP
+12V IN
F1
3A
FUSE\130-280
+12VA
U3 AP1501-50
TO-263-5L
VIN
FEEDBACK
OUTPUT
Heat pad
GND
ON/OFF
C56
1000p
C62
0.1u
C59
100uF/16V
EC10
L10 110uH
FB-7MM
D5
SS24
D-SMA_B
C66
470uF/16V
EC100
C67
470uF/16V
EC100
C64
0.1u
L11 3uH/1812/3A
L1812
C65
47uF/16V
EC10
VCC
C61
0.1u
+12VA : 12V DC ADAPTER IN
VCPU : 5V for MPU
VCC : 5V for SYSTEM
VCC3.3: 3.3V for PAD
VCC18 : 1.8V for CORE
VAD : 3.3V for A/D
VPLL : 3.3V for PLL
VDPLL : 3.3V for PLL
VDVI : 3.3V for DVI
VLCD : 5V for PANEL
VCC
L9
BEAD/1812
L1812
C55
47u/16V
EC10
GND
D37
DL4001
SMD_1A
C71
47u/16V
EC10
U4 AIC1084-33CM
TO-263
Vin
Vout
Heat Pad
ADJ/GND
VCC3.3
C53
47u/16V
EC10
U5 LC1117-18
SOT-223
VCC18
C68
47u/16V
EC10
C101
0.1u
C100
47uF/16V
EC10
CON2
Bri_Con
BackLite
R44 1K
R41 1K
R43 1K
Q4
R46 4.7K
BRI-ADJ 1
Q5
MMBT3904
SOT-23B
R47 4.7K
onBACKLITE 4
INVERTER
CON6-2.0
C78
0.1u
to Inverter
SCREW
PADX8A
R37 NC
Q2 4953
SOP8
R40 0/1206
R1206
VLCD
C76
100u/16V
EC10
R144 22K
R42
4.7K
R45 4.7K
4 onPANEL
Q3
MMBT3904
SOT-23B
C77
0.1u
POWER GROUND SHOULD CONNECT TO
DIGITAL GROUND BY ONE WAY
ULTRA SOURCE TECHNOLOGY CORP.
12/F.,FIYTA Tech.Building,
1 Road South High-tech.,
Nanshan District,Shenzhen(518053)
Title
LCD_Monitor_TSU56AK_GW
Size A4
Document Number
DC to DC
Design By:Erwin.Mu
Rev 1.0
Date: Tuesday, March 08, 2005
Sheet 2 of 5

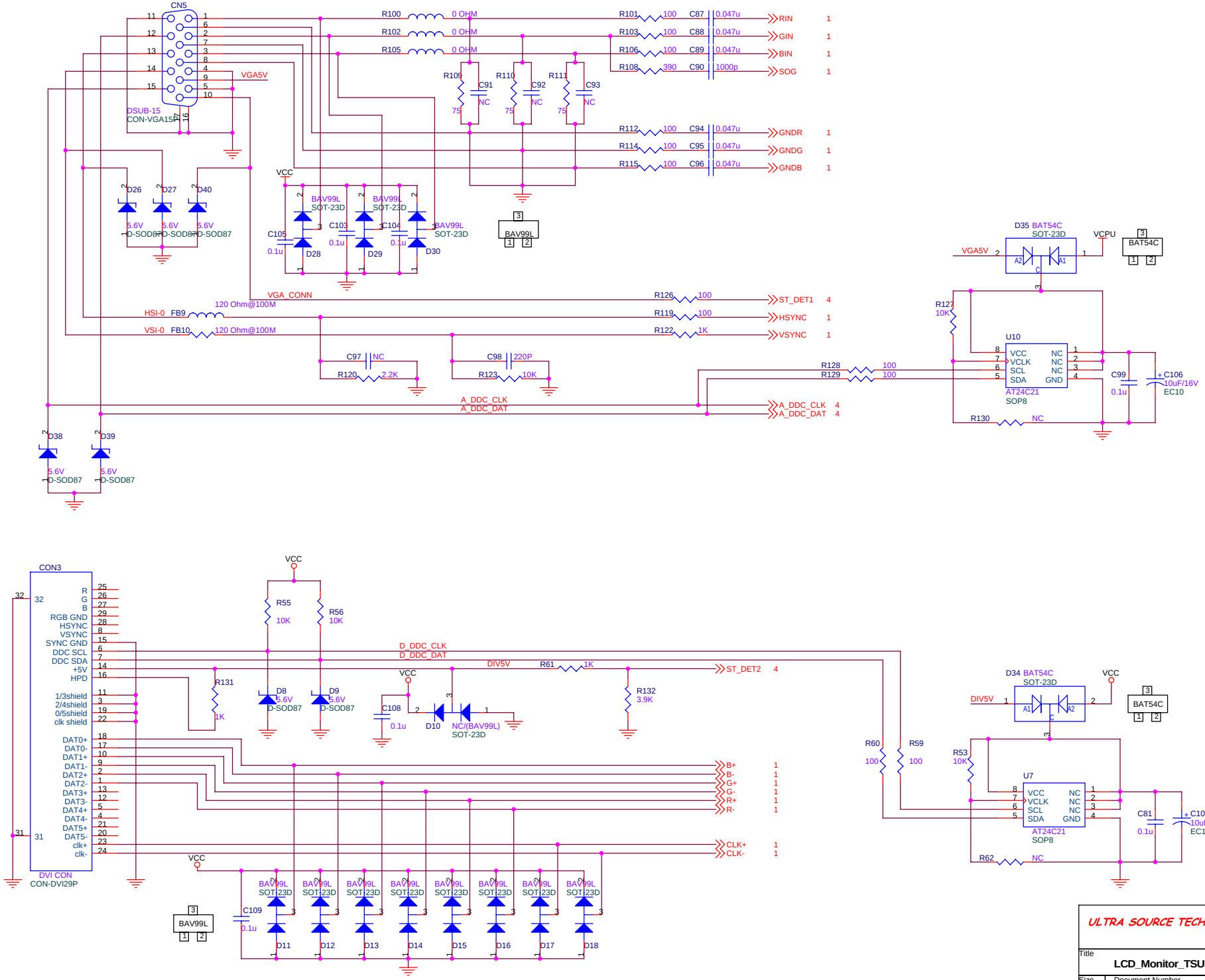

ULTRA SOURCE TECHNOLOGY CORP. 12/F.,FIYTA Tech.Building, 1 Road South High-tech., Nanshan District,Shenzhen(518053)

Title: LCD_Monitor_TSU56AK_GW

Size: A3 | Document Number: VGA AND DVI Input | Design By:Erwin.Mu | Rev: 1.0

Date: Tuesday, March 08, 2005 | Sheet 3 of 5

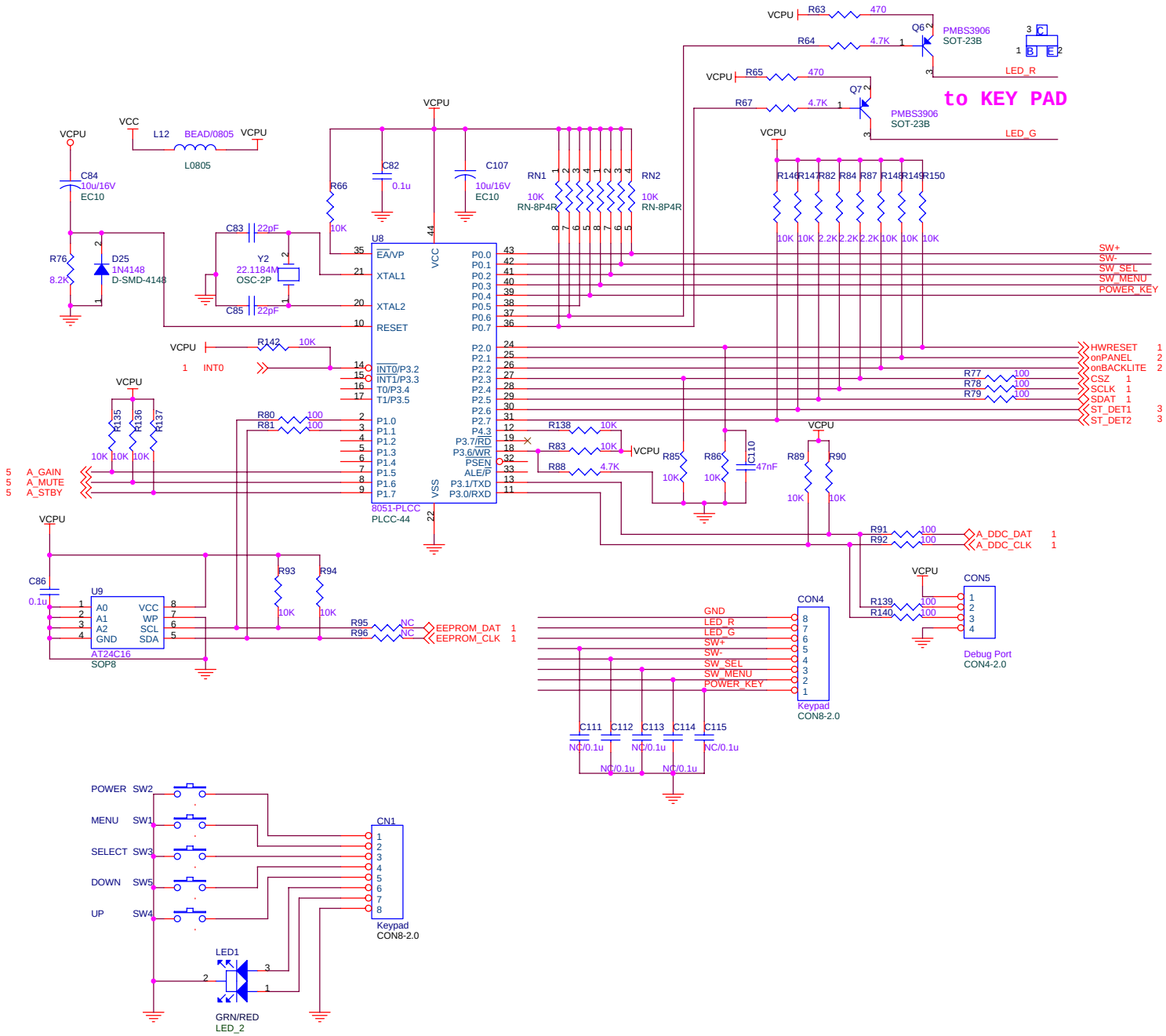

ULTRA SOURCE TECHNOLOGY CORP. 12/F.,FIYTA Tech.Building, 1 Road South High-tech., Nanshan District,Shenzhen(518053)

Title	LCD_Monitor_TSU56AK_GW	
Size A3	Document Number MPU	Rev 1.0
Date: Tuesday, March 08, 2005	Sheet 4 of 5	Design By:Erwin.Mu

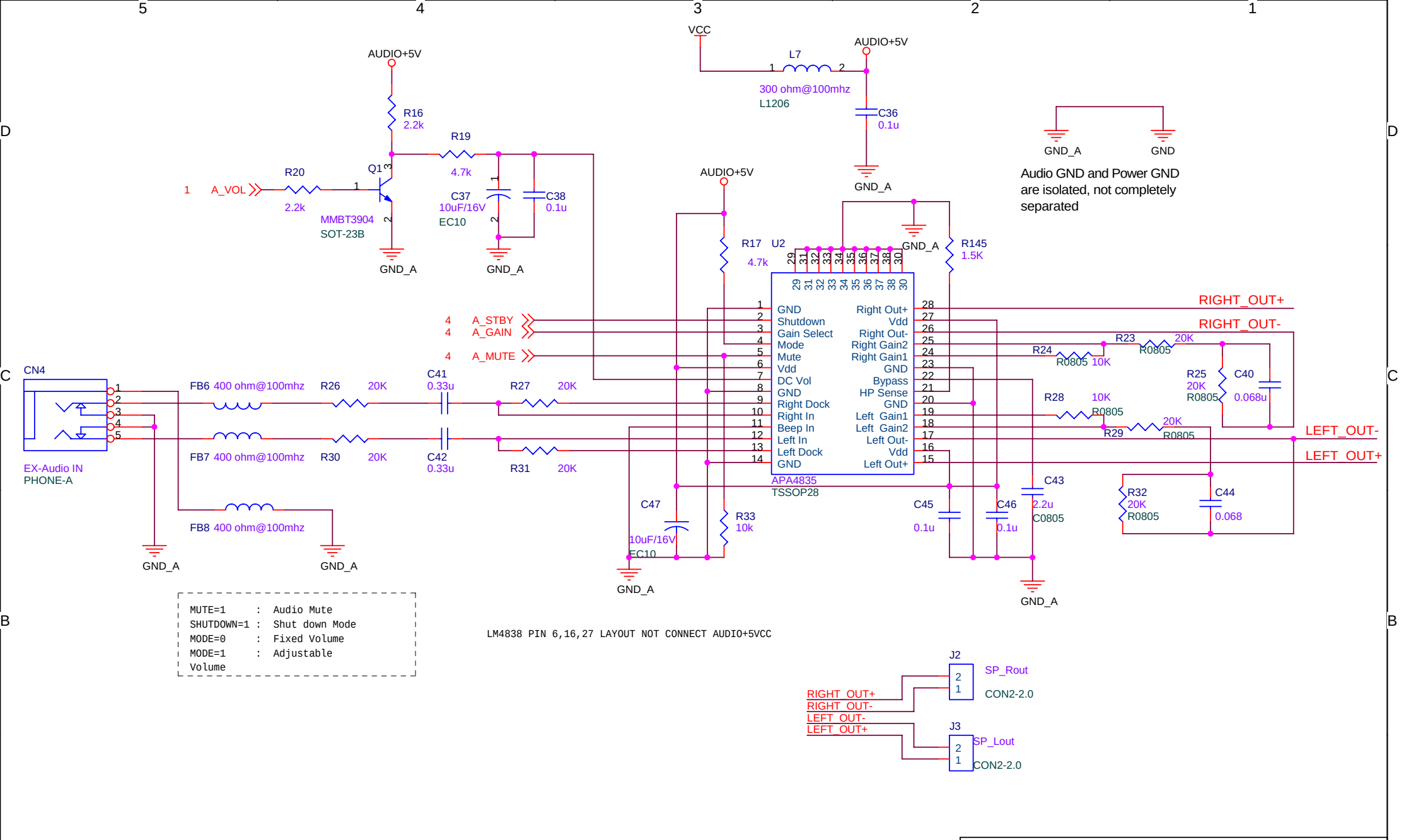

ULTRA SOURCE TECHNOLOGY CORP.
12/F.,FIYTA Tech.Building, 1 Road South High-tech., Nanshan District,Shenzhen(518053)

Title	LCD_Monitor_TSU56AK_GW		
Size A4	Document Number **Audio Amplifier**	Design By:Erwin.Mu	Rev 1.0
Date: Tuesday, March 08, 2005	Sheet 5 of 5		