EXHIBIT D

Circuit Diagram

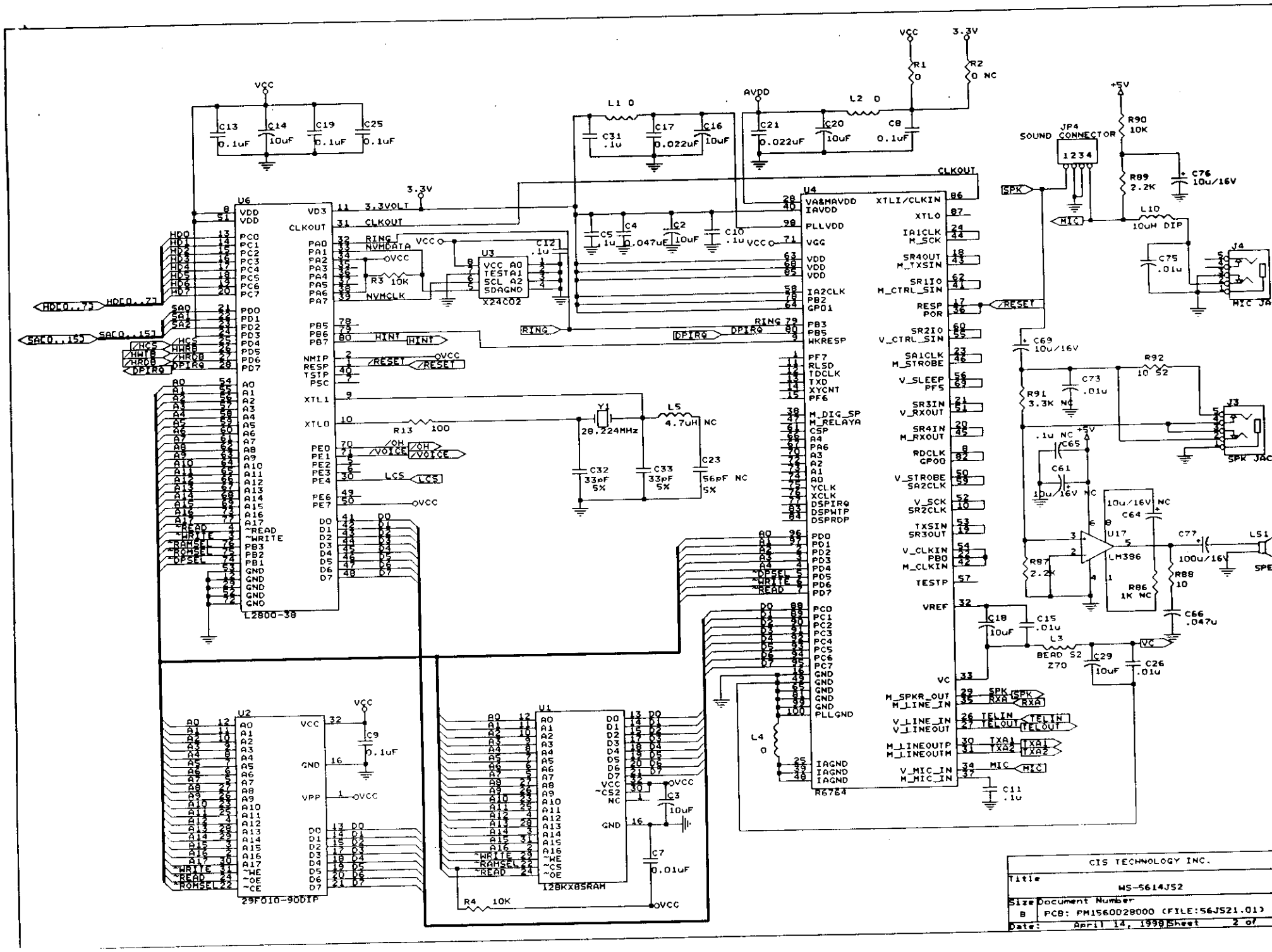
U6
L2800-38
U4
R6784
U3
X24C02
U2
29F010-90DIP
U1
128KX8SRAM
U17
LM386
JP4
SOUND CONNECTOR
J4
MIC JA
J3
SPK JAC
LS1
SPE
Y1
28.224MHz
CIS TECHNOLOGY INC.
Title
WS-5614J52
Size
B
Document Number
PCB: PM1560D28000 (FILE:56J521.01)
Date:
April 14, 1998
Sheet
2 of

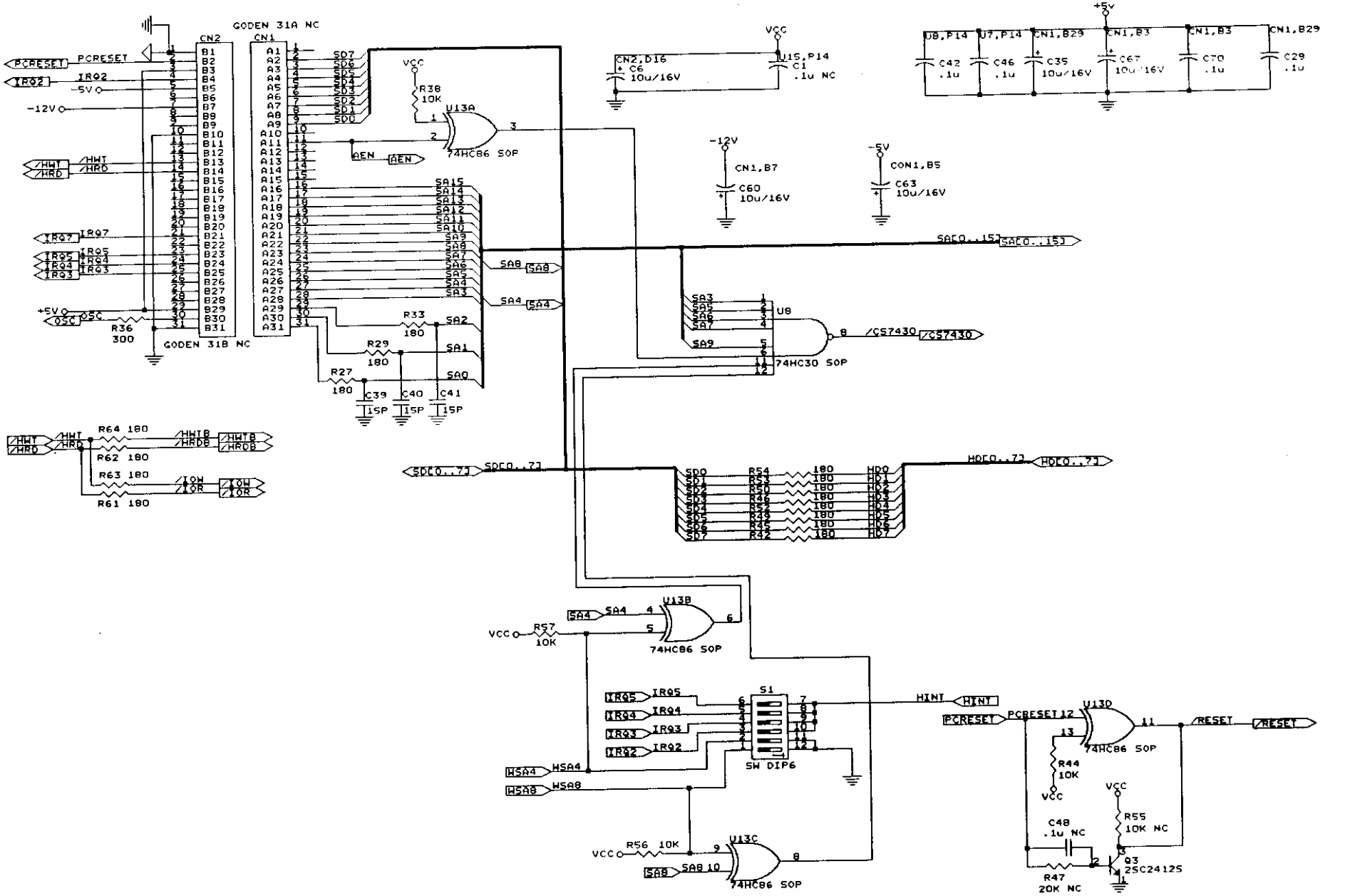

CIS TECHNOLOGY INC.	
Title	WS-5614JS2
Size B	Document Number PCB: PM1560028000 (FILE:56JS2.02)
Date: April 13, 1998	Sheet 3 of

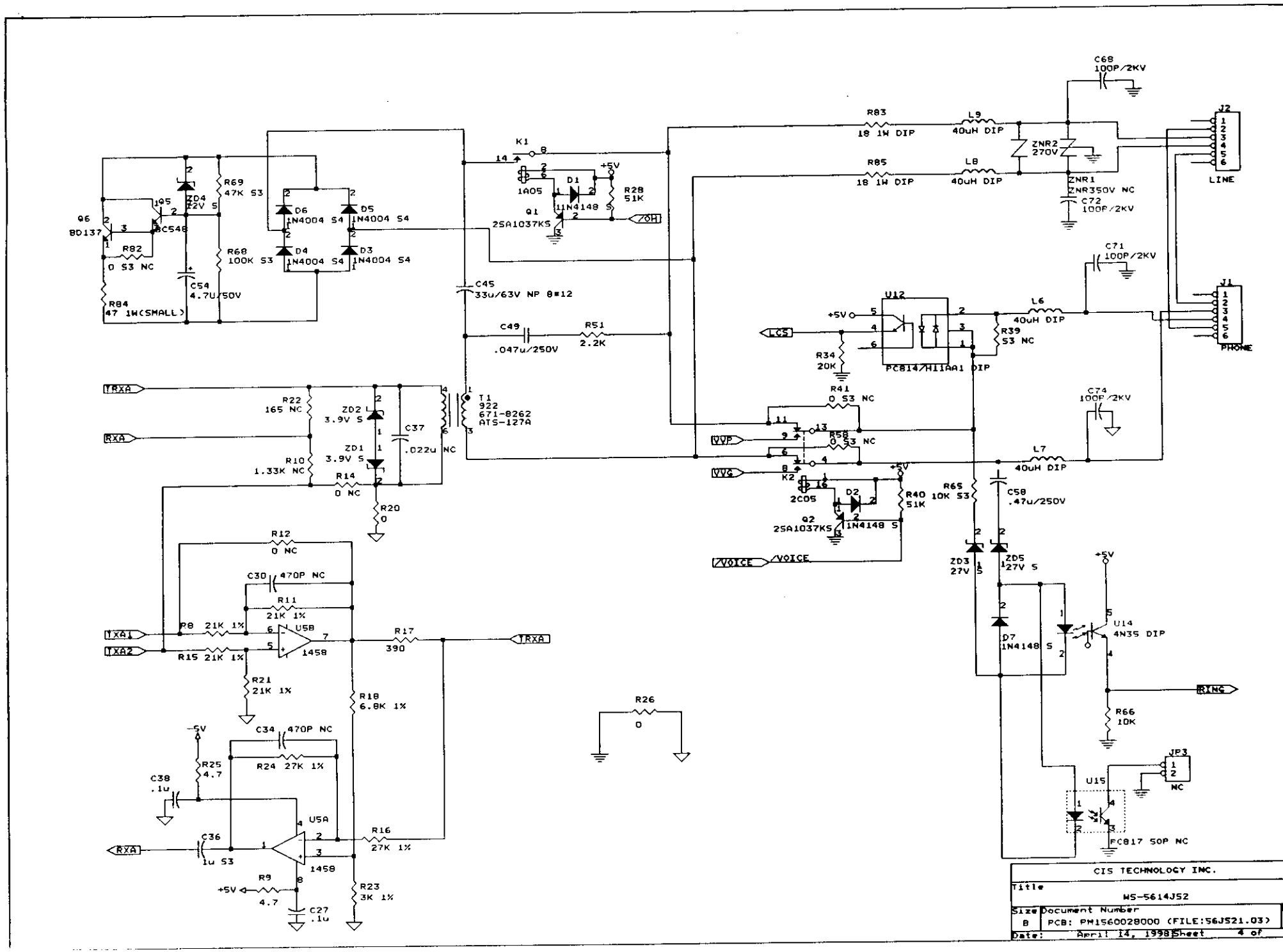

CIS TECHNOLOGY INC.

Title: WS-5614J52

Size: B | Document Number: PCB: PM1560028000 (FILE:56JS21.03)

Date: April 14, 1998 | Sheet 4 of

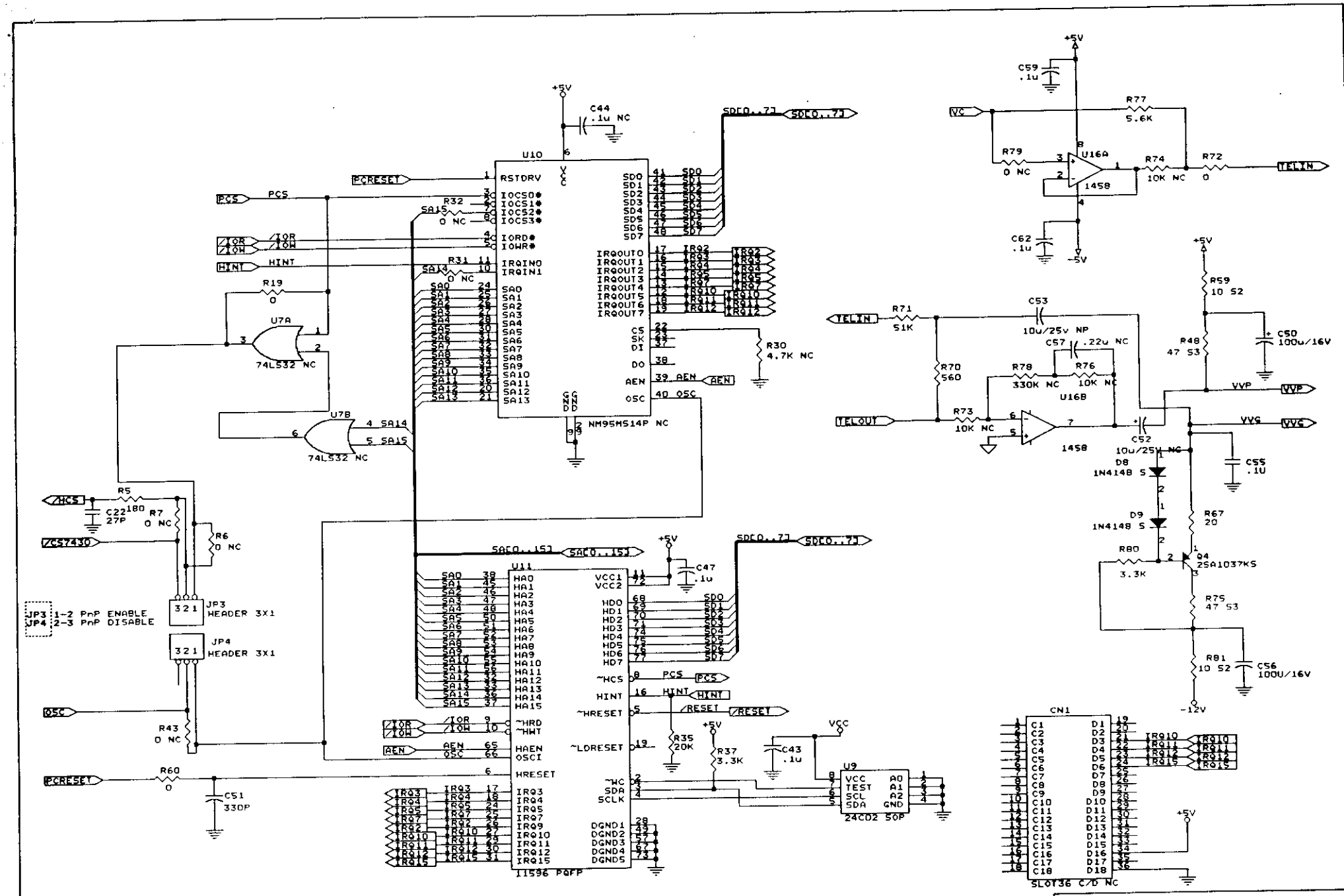
U10
RSTDRV
IOCS0#
IOCS1#
IOCS2#
IOCS3#
IORD#
IOWR#
IRQIN0
IRQIN1
IRQOUT0
IRQOUT1
IRQOUT2
IRQOUT3
IRQOUT4
IRQOUT5
IRQOUT6
IRQOUT7
SD0
SD1
SD2
SD3
SD4
SD5
SD6
SD7
SA0
SA1
SA2
SA3
SA4
SA5
SA6
SA7
SA8
SA9
SA10
SA11
SA12
SA13
CS
SK
DI
DO
AEN
OSC
NM95M514P NC
U7A
74LS32 NC
U7B
74LS32 NC
U11
HA0
HA1
HA2
HA3
HA4
HA5
HA6
HA7
HA8
HA9
HA10
HA11
HA12
HA13
HA14
HA15
VCC1
VCC2
HD0
HD1
HD2
HD3
HD4
HD5
HD6
HD7
~HCS
HINT
~HRESET
~LDRESET
~HRD
~HWT
HAEN
OSCI
HRESET
IRQ3
IRQ4
IRQ5
IRQ7
IRQ9
IRQ10
IRQ11
IRQ12
IRQ15
~WC
SDA
SCLK
DGND1
DGND2
DGND3
DGND4
DGND5
11596 PQFP
U9
VCC
TEST
SCL
SDA
A0
A1
A2
GND
24C02 SOP
U16A
1458
U16B
1458
CN1
SL0136 C/D NC
JP3
HEADER 3X1
JP4
HEADER 3X1
JP3 1-2 PnP ENABLE
JP4 2-3 PnP DISABLE
Q4
2SA1037KS
D8
1N4148 S
D9
1N4148 S
TELIN
TELOUT
VVP
VVG
VC
PCS
HINT
AEN
OSC
PCRESET
/HCS
/CS7430
/IOR
/IOW
/RESET
SDC0..7]
SAC0..15]
+5V
-5V
-12V
C44 .1u NC
C47 .1u
C43 .1u
C59 .1u
C62 .1u
C53 10u/25v NP
C57 .22u NC
C52 10u/25v NC
C50 100u/16V
C55 .1U
C56 100U/16V
C51 330P
C22 27P
R5 180
R6 0 NC
R7 0 NC
R19 0
R31 0 NC
R32 0 NC
R43 0 NC
R60 0
R30 4.7K NC
R35 20K
R37 3.3K
R77 5.6K
R79 0 NC
R74 10K NC
R72 0
R71 51K
R70 560
R78 330K NC
R76 10K NC
R73 10K NC
R59 10 S2
R48 47 S3
R67 20
R80 3.3K
R75 47 S3
R81 10 S2
CIS TECHNOLOGY INC.
Title
WS-5614JS2
Size B
Document Number
PCB: PM1560028000 (FILE:56JS21.04)
Date: April 13, 1998
Sheet 5 of