EXHIBIT D

Circuit Diagram

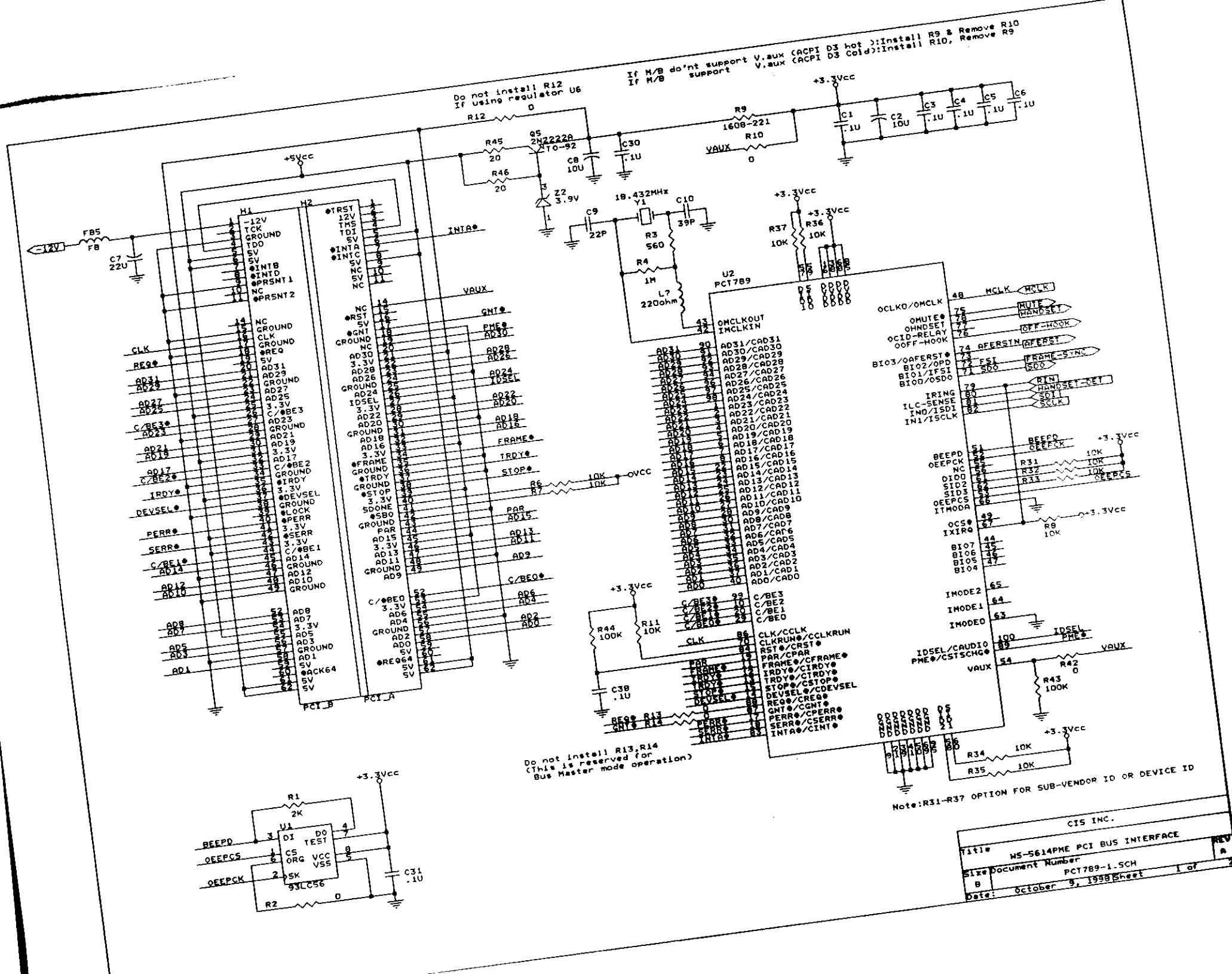
If M/B do'nt support V.aux (ACPI D3 hot):Install R9 & Remove R10
If M/B support V.aux (ACPI D3 Cold):Install R10, Remove R9
Do not install R12
If using regulator U6
Do not install R13,R14
(This is reserved for
Bus Master mode operation)
Note:R31-R37 OPTION FOR SUB-VENDOR ID OR DEVICE ID
U2
PCT789
PCI_A
PCI_B
93LC56
CIS INC.
Title
WS-5614PME PCI BUS INTERFACE
Size
B
Document Number
PCT789-1.SCH
Date:
October 9, 1998
Sheet
1 of

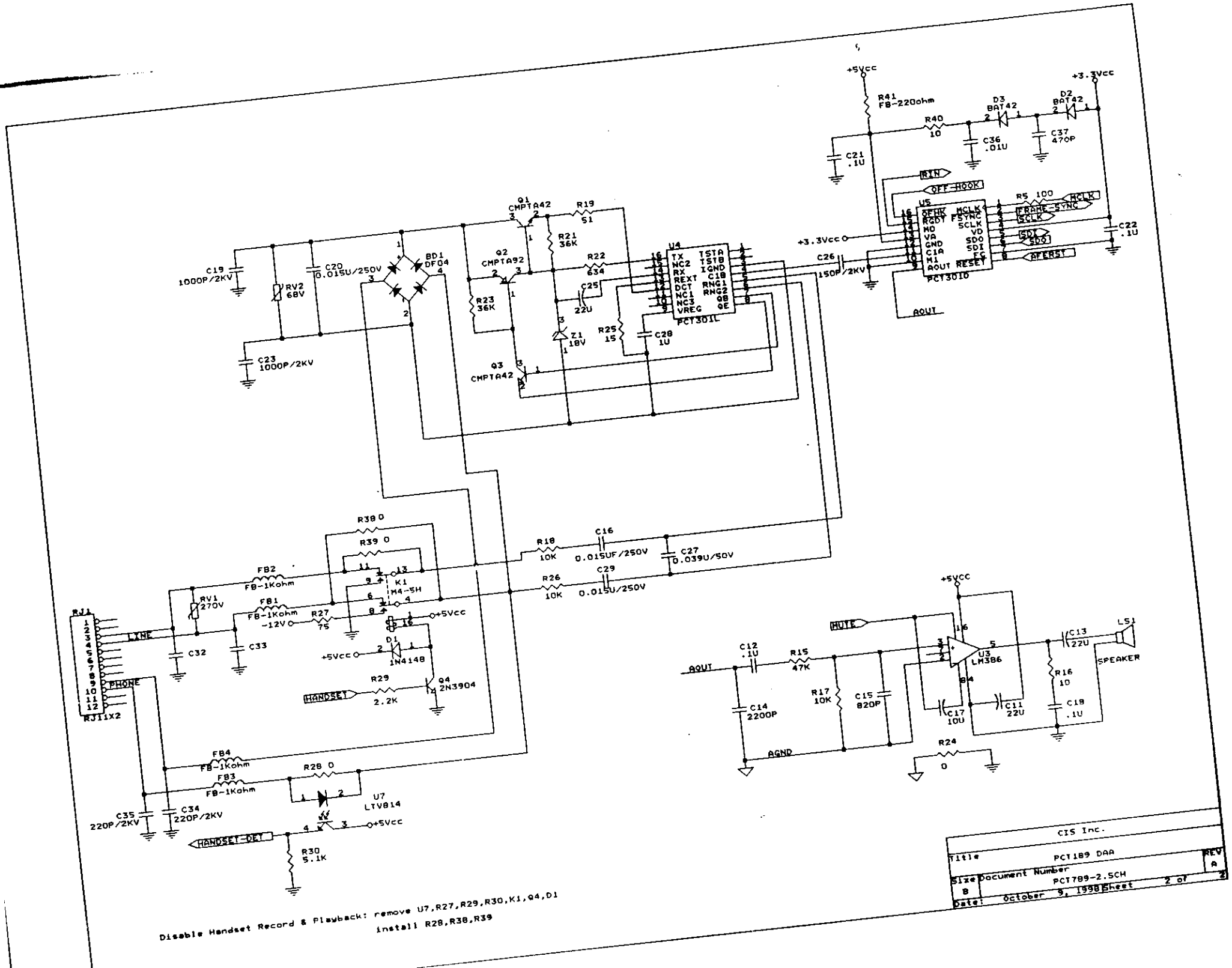
+5Vcc
+3.3Vcc
R41 FB-220ohm
R40 10
D3 BAT42
D2 BAT42
C36 .01U
C37 470P
C21 .1U
RIN
OFF-HOOK
U5
PCT3010
R5 100
MCLK
FRAME-SYNC
SCLK
SDI
SDO
AFERST
C22 .1U
C26 150P/2KV
AOUT
Q1 CMPTA42
Q2 CMPTA92
Q3 CMPTA42
R19 51
R21 36K
R22 634
R23 36K
C25 22U
Z1 18V
R25 15
C28 1U
U4
PCT301L
C19 1000P/2KV
C20 0.015U/250V
RV2 68V
BD1 DF04
C23 1000P/2KV
R38 0
R39 0
FB2 FB-1Kohm
FB1 FB-1Kohm
-12V
R27 75
K1 M4-5H
+5Vcc
D1 1N4148
R29 2.2K
Q4 2N3904
HANDSET
RV1 270V
C32
C33
RJ1
RJ11X2
LINE
PHONE
R18 10K
C16 0.015UF/250V
C27 0.039U/50V
R26 10K
C29 0.015U/250V
FB4 FB-1Kohm
FB3 FB-1Kohm
R28 0
U7 LTV814
C35 220P/2KV
C34 220P/2KV
HANDSET-DET
R30 5.1K
HUTE
C12 .1U
R15 47K
C14 2200P
R17 10K
C15 820P
AGND
U3 LM386
C17 10U
C11 22U
C13 22U
R16 10
C18 .1U
LS1
SPEAKER
R24 0
Disable Handset Record & Playback: remove U7,R27,R29,R30,K1,Q4,D1
install R28,R38,R39
CIS Inc.
Title PCT189 DAA
Size B
Document Number PCT789-2.SCH
Rev A
Date: October 9, 1998
Sheet 2 of 2