SAR Compliance Test Report

Testing Lab: RTS
440 Phillip Street
Waterloo, Ontario
Canada N2L 5R9
Phone: 519-888-7465
Fax: 519-746-0189

Applicant: BlackBerry Limited
295 Phillip Street
Waterloo, Ontario
Canada N2L 3W8
Phone: 519-888-7465
Fax: 519-888-6906

Web site: www.BlackBerry.com

Statement of Compliance: RTS declares under its sole responsibility that the product to which this declaration relates, is in conformity with the appropriate RF exposure standards, recommendations and guidelines. It also declares that the product was tested in accordance with the appropriate measurement standards, guidelines and recommended practices.

Device Category: This BlackBerry® Smartphone is a portable device, designed to be used in direct contact with the user's head, hand and to be carried in approved accessories when carried on the user's body.

RF Exposure Environment: This device has been shown to be in compliance for localized specific absorption rate (SAR) for uncontrolled environment/general population exposure limits specified in, FCC 96-326, IEEE Std. C95.1-2005, Health Canada's Safety Code 6, as reproduced in RSS-102 issue 4-2010 and has been tested in accordance with the measurement procedures specified in latest FCC OET KDB Procedures, ANSI/IEEE Std. C95.3-2002, IEEE 1528-2003, IEC 62209-1-2005, IEC 62209 - 2-2010 and Health Canada's Safety Code 6.

Daoud Attayi

Daoud Attayi
Compliance Manager (SAR & HAC)
(Verification and responsible of the Test Report)

Masud Attayi

Masud S. Attayi
Manager, Regulatory Compliance
(Approval for the Test Report)

RTS is accredited
according to
EN ISO/IEC 17025 by:

SCC Accredited LAB
592

Report Issue Date: September 30, 2013

This report shall NOT be reproduced except in full without the written consent of RTS
Copyright 2005-2013, RTS, A division of BlackBerry Limited

Changes in report RTS-6046-1308-39 Rev 3:

Reused SAR data from model RFX101W was added to this report to address FCC OET requirement. Updated Figure/Table 1.8.3-1.

Revised report to RTS-6046-1308-39 Rev 4, added clarification that 802.11a/n (5-6 GHz) is not supported in Hotspot mode.

Note: According to the hardware similarity document BlackBerry model: RGB141LW has the same Wi-Fi/BT design, PCB, and Cellular/WiFi/BT antennas as RFX101LW. The difference between the models is RGB141LW does not support LTE band 4/13, instead it supports CDMA 800 BC10 and LTE band 25. In addition, antenna tuning is different on GSM/UMTS/LTE modes bands. Due to this, RFX101LW SAR data for the common bands are reused in this report.

This report shall NOT be reproduced except in full without the written consent of RTS
Copyright 2005-2013, RTS, A division of BlackBerry Limited

Contents

1.0 OPERATING CONFIGURATIONS AND TEST CONDITIONS 5
1.1 PICTURE OF DEVICE 5
1.2 ANTENNA DESCRIPTION 5
1.3 DEVICE DESCRIPTION 5
1.4 BODY WORN ACCESSORIES (HOLSTERS) 8
1.5 HEADSET 8
1.6 BATTERY 8
1.7 PROCEDURE USED TO ESTABLISH TEST SIGNAL 8
1.8 HIGHLIGHTS OF THE FCC OET SAR MEASUREMENT REQUIREMENTS 9
1.8.1 SAR MEASUREMENT PROCEDURES FOR 802.11 A/B/G/N AS PER KDB 248227 D01 V01R02 AND SAR MEASUREMENTS 100 MHZ TO 6 GHZ AS PER KDB 865664 D0 V01 9
1.8.2 SAR MEASUREMENT REQUIREMENTS FOR BLUETOOTH 18
1.8.3 SAR EVALUATION PROCEDURES FOR PORTABLE DEVICES WITH WIRELESS ROUTER CAPABILITIES AS PER KDB 941225 D06 V01 19
1.8.4 SAR EVALUATION PROCEDURES FOR GSM/(E)GPRS DUAL TRANSFER MODE AS PER KDB 941225 D04 V01 AND SAR TEST REDUCTION PROCEDURES GSM GPRS EDGE AS PER DDB 941225 D03 VO1 20
1.8.5 SAR MEASUREMENT PROCEDURE FOR FAST SAR SCAN AS PER KDB 447498 22
1.8.6 SAR MEASUREMENT PROCEDURES FOR 3G DEVICES 23
1.8.7 TEST SEUP INFORMATION FOR WCDMA / HSPDA / HSUPA 23
1.8.8 FCC SAR MEASUREMENT PROCEDURES FOR 3G DEVICES CDMA 2000 30
1.8.9 SAR EVALUATION PROCEDURES FOR LTE AS PER KDB 941225 D05 V02 33
1.9 GENERAL SAR TEST REDUCTION AND EXCLUSION PROCEDURE AS PER KDB 447498 D01 V05 AND SAR HANDSETS MULTI XMITER AND ANT PROCEDURE AS PER 648474 D04 V01 40
1.9.1 SIMULTANEOUS TRANSMISSION ANALYSIS 41
1.10 SVLTE POWER REDUCTION CONSIDERATIONS 46
1.10.1 SVLTE POWER REDUCTION, TEST SETUP CONFIGURATION AND CONDUCTED POWER MEASUREMENTS 46
1.11 WI-FI AND HOTSPOT MODE POWER REDUCTIONS 48
2.0 DESCRIPTION OF THE TEST EQUIPMENT 49
2.1 SAR MEASUREMENT SYSTEM 49
2.1.1 EQUIPMENT LIST 50
2.2 DESCRIPTION OF THE TEST SETUP 51
2.2.1 DEVICE AND BASE STATION SIMULATOR SETUP 51
2.2.2 DASY SETUP 51
3.0 ELECTRIC FIELD PROBE CALIBRATION 51
3.1 PROBE SPECIFICATIONS 51
3.2 PROBE CALIBRATION AND MEASUREMENT UNCERTAINTY 52
4.0 SAR MEASUREMENT SYSTEM VERIFICATION 54
4.1 SYSTEM ACCURACY VERIFICATION FOR HEAD ADJACENT USE 54
5.0 PHANTOM DESCRIPTION 56
6.0 TISSUE DIELECTRIC PROPERTIES 57
6.1 COMPOSITION OF TISSUE SIMULANT 57
6.1.1 EQUIPMENT 57
6.2 ELECTRICAL PARAMETERS OF THE TISSUE SIMULATING LIQUID 58
6.2.2 TEST CONFIGURATION 63
6.2.3 PROCEDURE 63
7.0 SAR SAFETY LIMITS 64
8.0 DEVICE POSITIONING 65
8.1 DEVICE HOLDER FOR SAM TWIN PHANTOM 65
8.2 DESCRIPTION OF THE TEST POSITIONING 66
8.2.1 TEST POSITIONS OF DEVICE RELATIVE TO HEAD 66
8.2.2 BODY-WORN CONFIGURATION 68
8.2.3 LIMB/HAND CONFIGURATION 68
9.0 HIGH LEVEL EVALUATION 69
9.1 MAXIMUM SEARCH 69
9.2 EXTRAPOLATION 69
9.3 BOUNDARY CORRECTION 69
9.4 PEAK SEARCH FOR 1G AND 10G CUBE AVERAGED SAR 69
10.0 MEASUREMENT UNCERTAINTY 70
11.0 TEST RESULTS 73

This report shall NOT be reproduced except in full without the written consent of RTS
Copyright 2005-2013, RTS, A division of BlackBerry Limited

11.1 SAR MEASUREMENT RESULTS AT HIGHEST POWER MEASURED AGAINST THE HEAD 73
11.2 SAR MEASUREMENT RESULTS AT HIGHEST POWER MEASURED AGAINST THE BODY USING ACCESSORIES 84
12.0 REFERENCES 97

APPENDIX A: SAR DISTRIBUTION COMPARISON FOR ACCURACY VERIFICATION

APPENDIX B: SAR DISTRIBUTION PLOTS - HEAD CONFIGURATION

APPENDIX C1: SAR DISTRIBUTION PLOTS - BODY-WORN CONFIGURATION

APPENDIX C2: SAR DISTRIBUTION PLOTS - HOT SPOT

APPENDIX D: PROBE & DIPOLE CALIBRATION DATA

APPENDIX E: PHOTOGRAPHS

This report shall NOT be reproduced except in full without the written consent of RTS
Copyright 2005-2013, RTS, A division of BlackBerry Limited

1.0 OPERATING CONFIGURATIONS AND TEST CONDITIONS

1.1 Picture of Device

Please refer to Appendix E.

Figure 1.1-1 BlackBerry Smartphone

1.2 Antenna description

Type	Internal fixed antenna
Location	Please refer to Figure 1.9-1
Configuration	Internal fixed antenna

Table 1.2-1 Antenna description

1.3 Device description

Device Model	RGB141LW			
FCC ID	L6ARGB140LW			
PIN	Radiated: 303E76AA, 303E7691 Conducted: 303E76AA			
Hardware Rev	Rev1-x04-00/01/04			
Software Version	10.2.0.345/1095			
Prototype or Production Unit	Production			
Mode(s) of Operation	1-slot GSM 850 GSM 1900	2-slots EDGE/GPRS 850/1900	3-slots EDGE/GPRS 850/1900	4-slots EDGE/GPRS 850/1900
Nominal Maximum conducted RF Output Power (dBm)	32.0 28.5	29.5 28.0	28.5 25.5	26.5 25.0
Tolerance in Power Setting on centre channel (dB)	± 0.5	± 0.5	± 0.5	± 0.5
Duty Cycle	1:8	2:8	3:8	4:8
Transmitting Frequency Range (MHz)	824.2 – 848.8 1850.2 – 1909.8	824.2 – 848.8 1850.2 – 1909.8	824.2 – 848.8 1850.2 – 1909.8	824.2 – 848.8 1850.2 – 1909.8
Mode(s) of Operation	HSPA+ WCDMA/UMTS FDD V (850)	HSPA+ WCDMA/UMTS FDD II (1900)	CDMA2000/ 1xEvDO 800	CDMA2000/ 1xEvDO 850
Nominal Maximum conducted RF Output Power (dBm)	23.0	23.0	24.0	24.0
Tolerance in Power Setting on centre channel (dB)	± 0.5	± 0.5	± 0.50	± 0.50
Duty Cycle	1:1	1:1	1:1	1:1
Transmitting Frequency Range (MHz)	824.6 – 846.6	1852.4 – 1907.6	817.9 – 823.1	824.7 – 848.5
Mode(s) of Operation	CDMA2000/ 1xEvDO 1900	802.11b	802.11g	802.11n
Nominal Maximum	23.5	15.5	15.5	15.5

This report shall NOT be reproduced except in full without the written consent of RTS
Copyright 2005-2013, RTS, A division of BlackBerry Limited

conducted RF Output Power (dBm)				
Tolerance in Power Setting on centre channel (dB)	± 0.50	± 1.0	± 1.0	± 1.0
Duty Cycle	1:1	1:1	1:1	1:1
Transmitting Frequency Range (MHz)	1851.2 – 1908.5	2412-2462	2412-2462	2412-2462
Mode(s) of Operation	Bluetooth	802.11a/n	802.11a/n	802.11a/n
Nominal Maximum conducted RF Output Power (dBm)	9.5	15.0	15.0	15.0
Tolerance in Power Setting on centre channel (dB)	N/A	± 1.0	± 1.0	± 1.0
Duty Cycle	N/A	1:1	1:1	1:1
Transmitting Frequency Range (MHz)	2402-2483	5180-5240	5260-5320	5500-5700
Mode(s) of Operation	802.11a/n	NFC		
Nominal Maximum conducted RF Output Power (dBm)	15.0	N/A		
Tolerance in Power Setting on centre channel (dB)	± 1.0	N/A		
Duty Cycle	1:1	N/A		
Transmitting Frequency Range (MHz)	5745-5825	13.56		

Table 1.3-1 Test device characterization non-LTE U.S. wireless operating modes/bands

Note 1: SAR measurements on NFC haven't been conducted, since it is very low power and frequency magnetic field transceiver. SAR probes measure higher frequency/power electric field.

This report shall NOT be reproduced except in full without the written consent of RTS
Copyright 2005-2013, RTS, A division of BlackBerry Limited

Device Model	RGB141LW			
FCC ID	L6ARGB140LW			
PIN	Radiated: 303E76AA, 303E7691 Conducted: 303E76AA			
Hardware Rev	Rev1-x04-00/01/04			
Software Version	10.2.0.345/1095			
Prototype or Production Unit	Production			
Transmission channel bandwidth	Band 25: 1.4 MHz, 3 MHz, 5 MHz, 10 MHz, 15MHz, 20MHz			
Transmission channel number and frequencies				
	LTE band 25			
	Chan.	**f (MHz)**		
L[2]	26140	1860.0		
M	26365	1882.5		
H[2]	26590	1905.0		
UE Category	Category 3			
Modulation supported in uplink	QPSK, 16QAM			
Description of LTE antenna	1 Tx/Rx Ant, Sharing with GSM/UMTS; 2 Rx Ant, one separate and one sharing with CDMA			
LTE voice available/supported	No			
Hotspot with LTE+WiFi	Yes			
Hotspot with LTE+WiFi active with GSM/WCDMA voice	No			
LTE MPR permanently built-in by design	Yes			
LTE A-MPR	Disabled during SAR testing , by setting NV value to NV_01 on the CMW500			
LTE maximum average power (dBm)	Band 25: 23.2 dBm			
Other non-LTE U.S. wireless operating modes/bands	GSM//WCDMA/CDMA	800 MHz CDMA BC10 835 MHz GSM/UMTS/CDMA BC0 1900 MHz GSM/UMTS/CDMA BC1		
	WiFi and BT	2.4 GHz Wi-Fi 5 GHz Wi-Fi 2.4 GHz BT		
Simultaneous Tx conditions	Please refer to section 1.9			
Power reduction applied	Please refer to sections 1.10 & 1.11			

Table 1.3-2 Test device characterization all U.S. wireless operating modes/bands

Note 2: As per 3GPP TS 36.521-1 V10.0.0 (2011-12):

"The channel numbers that designate carrier frequencies so close to the operating band edges that the carrier extends beyond the operating band edge shall not be used. This implies that the first 7, 15, 25, 50, 75 and 100 channel numbers at the lower operating band edge and the last 6, 14, 24, 49, 74 and 99 channel numbers at the upper operating band edge shall not be used for channel bandwidths of 1.4, 3, 5, 10, 15 and 20 MHz respectively."…5.4.4

This report shall NOT be reproduced except in full without the written consent of RTS
Copyright 2005-2013, RTS, A division of BlackBerry Limited

1.4 Body worn accessories (holsters)

The device has been tested with the holsters listed below. The holster has been designed with the intended device orientation being with the LCD facing the belt clip only. Proper positioning is vital for protection of the LCD display, and to help maximize the battery life of the device. The device can also be placed in the holster with the backside facing the belt clip. Body SAR measurements were carried out with the worst-case configuration front LCD side and backside towards the belt clip.

Number	Holster Type	Part Number	Separation distance (mm)
1	Vertical Holster, Leather	HDW-55471-001	20

Table 1.4-1 Body worn holster

Note: Holsters have identical design, except for different leather material being used.

Please refer to Appendix E.
Figure 1.4-1 Body-worn holster

1.5 Headset

The device was tested with the following headset model if 1g avg. SAR value for Body-worn/Hotspot is >1.2 W/kg:

1)HDW-44306-xxx

1.6 Battery

The device was tested with the following Lithium Ion Battery packs:

1)BAT-50136-00x

1.7 Procedure used to establish test signal

- The device was put into test mode for SAR measurements by placing a call from a Rohde & Schwarz CMU 200 or CMW 500 Communications Test Instrument. The power control level was set to command the device to transmit at full power at the specified frequency. Other parameters include: Channel type = full rate, discontinuous transmission off, frequency hopping off. For LTE specific bandwidths, number of resource blocks, and resource block offsets were set. In addition, LTE A-MPR was disabled.
- Software Tool was used to set WiFi to transmit at maximum power and duty cycle for each band, channel, and modulation.

This report shall NOT be reproduced except in full without the written consent of RTS
Copyright 2005-2013, RTS, A division of BlackBerry Limited

1.8 Highlights of the FCC OET SAR Measurement Requirements

1.8.1 SAR Measurement Procedures for 802.11 a/b/g/n as per KDB 248227 D01 v01r02 and SAR Measurements 100 MHz to 6 GHz as per KDB 865664 D0 V01

• Repeat measurements when the measured SAR is ≥ 0.80 W/kg. If the measured SAR values are < 1.45 W/kg with ≤ 20% variation, only one repeated measurement was performed to reaffirm that the results are not expected to have substantial variations. An additional repeated measurement is required only if the measured results are within 10% of the SAR limit and vary by more than 20%, which are often related to device and measurement setup difficulties.
• Maintained dielectric parameter uncertainty to ± 5.0% of the target values, (although it is very challenging to control/maintain both permittivity and conductivity for 5-6 GHz for all test channels within ± 5.0% of the target values, some conductivity values were measured slightly higher which resulted in more conservative SAR values.
• Liquid depth from SAM ERP or flat phantom was kept at 15 cm.
• Probe Requirement: Used SPEAG probe model ET3DV6/ES3DV3 for 2.45 GHz and EX3DV4 for 5-6 GHz SAR testing specs are outlined below:

ET3DV6/ES3DV3	
Probe tip to sensor center	2.7 mm / 2.0 mm
Probe tip diameter is	6.8 mm / 4.0 mm
Probe calibration uncertainty	< 15 % for f = 2.45 GHz
Probe calibration range	± 100 MHz
EX3DV4	
Probe tip to sensor center	1.0 mm
Probe tip diameter is	2.5 mm
Probe calibration uncertainty	< 15 % for f = 2.45 to < 6.0 GHz
Probe calibration range	± 100 MHz

Table 1.8.1-1 Probe specification requirements

• Area scan resolution was maintained at 10mm (5-6 GHz)
• Area scan resolution was maintained at 12mm (2-3 GHz)
• Area scan resolution was maintained at 15mm (</= 2 GHz)
• System accuracy validation was conducted within ± 100 MHz of device mid-band frequency and results were within ± 10 % of the manufacturers target value for each band.
• Zoom Scan: The following settings were used for the validation and measurement.

This report shall NOT be reproduced except in full without the written consent of RTS
Copyright 2005-2013, RTS, A division of BlackBerry Limited

ET3DV6/ES3DV3	
Closest Measurement Point to Phantom	4.0 mm
Zoom Scan (x,y) Resolution	7.5 mm (≤2 GHz) or 5 mm (2-3 GHz)
Zoom Scan (z) Resolution	5.0 mm
Zoom Scan Volume	Minimum 30 x 30 x 30 mm[1]
EX3DV4	
Closest Measurement Point to Phantom	2.0 mm
Zoom Scan (x,y) Resolution	4.0 mm (5-6 GHz)
Zoom Scan (z) Resolution	2.0 mm (5-6 GHz)
Zoom Scan Volume	Minimum 22 x 22 x 22 mm[1]

Table 1.8.1-2 Zoom Scan requirement

Note 1: "Auto-extend zoom scan when maxima on boundary" is enabled, which can result in the zoom scan dimensions varying between 30x30x30 to 60x60x30 mm and 22x22x22 to 48x40x22 mm.

- Frequency Channel Configuration: 802.11 b/g modes are tested on the highest output power channel.
- 802.11a is tested for UNII operations on the highest output power channel of each sub band (low, mid, upper band I, and upper band II). If the highest output power channel has a SAR level that is not 3dB lower than the limit, then the low, mid, and high channels of each sub band must also be tested.
- For each frequency band, testing at higher rates and higher modulations is not required when the maximum average output power for each of these configurations is less than ¼ dB higher than those measured at the lowest data rate.
- SAR is not required for 802.11g/n channels when the maximum average output power is less than ¼ dB higher than that measured on the corresponding 802.11b channels.
- SAR test was conducted on each "default test channel" and each band with the worst case modulation and highest duty cycle, if the SAR level was within 3dB of the limit.
- Conducted power measurements:

This report shall NOT be reproduced except in full without the written consent of RTS
Copyright 2005-2013, RTS, A division of BlackBerry Limited

802.11b @ 1Mbps			**802.11g @ 6Mbps**			**802.11n @ 6.5 Mbps**		
f (MHz)	**Chan**	**Max. Avg. Cond. Power (dBm)**	**f (MHz)**	**Chan**	**Max. Avg. Cond. Power (dBm)**	**f (MHz)**	**Chan**	**Max. Avg. Cond. Power (dBm)**
2412	1	15.9	2412	1	16.3	2412	1	16.3
2437	6	15.9	2437	6	**16.4**	2437	6	16.3
2462	11	15.5	2462	11	13.8	2462	11	13.8

802.11g			**802.11b**		
Data Rate (Mbps)	**Mod.**	**Channel 6 Max. Avg. Cond. Power (dBm)**	**Data Rate (Mbps)**	**Mod.**	**Channel 6 Max. Avg. Cond. Power (dBm)**
6	BPSK	16.4	1	BPSK	15.9
9	BPSK	16.3	2	DQPSK	15.9
12	QPSK	16.3	5.5	CCK	15.9
18	QPSK	16.1	11	CCK	15.8
24	16-QAM	16.0			
36	16-QAM	15.8			
48	64-QAM	15.6			
54	64-QAM	15.4			

802.11 n		
Data Rate (Mbps)	**Mod.**	**Channel 6 Max. Avg. Cond. Power (dBm)**
6.5	MCS0	16.3
13	MCS1	16.3
19.5	MCS2	16.2
26	MCS3	16.1
39	MCS4	15.9
52	MCS5	15.8
58.5	MCS6	14.6
65	MCS7	14.5

Table 1.8.1-3a 802.11 b/g/n modulation type/data rate vs. conducted power at full/maximum power

This report shall NOT be reproduced except in full without the written consent of RTS
Copyright 2005-2013, RTS, A division of BlackBerry Limited

802.11b @ 1Mbps			802.11g @ 6Mbps			802.11n @ 6.5 Mbps		
f (MHz)	**Chan**	**Max. Avg. Cond. Power (dBm)**	**f (MHz)**	**Chan**	**Max. Avg. Cond. Power (dBm)**	**f (MHz)**	**Chan**	**Max. Avg. Cond. Power (dBm)**
2412	1	10.1	2412	1	11.3	2412	1	11.2
2437	6	10.2	2437	6	**11.4**	2437	6	11.3
2462	11	9.8	2462	11	10.9	2462	11	10.9

802.11g			802.11b		
Data Rate (Mbps)	**Mod.**	**Channel 6 Max. Avg. Cond. Power (dBm)**	**Data Rate (Mbps)**	**Mod.**	**Channel 6 Max. Avg. Cond. Power (dBm)**
6	BPSK	11.4	1	BPSK	10.2
9	BPSK	11.2	2	DQPSK	10.2
12	QPSK	11.1	5.5	CCK	10.2
18	QPSK	11.1	11	CCK	10.0
24	16-QAM	10.9			
36	16-QAM	10.7			
48	64-QAM	10.4			
54	64-QAM	10.4			

Table 1.8.1-3b 802.11 b/g/n modulation type/data rate vs. conducted power at Hotspot power level

- There is fixed power reduction on Wi-Fi in hotspot mode. Power reduction is triggered when device is set to Hotspot mode.

This report shall NOT be reproduced except in full without the written consent of RTS
Copyright 2005-2013, RTS, A division of BlackBerry Limited

802.11b @ 1Mbps			802.11g @ 6Mbps			802.11n @ 6.5 Mbps		
f (MHz)	Chan	Max. Avg. Cond. Power (dBm)	f (MHz)	Chan	Max. Avg. Cond. Power (dBm)	f (MHz)	Chan	Max. Avg. Cond. Power (dBm)
2412	1	12.3	2412	1	13.1	2412	1	13.1
2437	6	12.5	2437	6	**13.2**	2437	6	13.2
2462	11	12.1	2462	11	12.8	2462	11	12.8

802.11g			802.11b		
Data Rate (Mbps)	Mod.	Channel 6 Max. Avg. Cond. Power (dBm)	Data Rate (Mbps)	Mod.	Channel 6 Max. Avg. Cond. Power (dBm)
6	BPSK	13.2	1	BPSK	12.5
9	BPSK	13.2	2	DQPSK	12.4
12	QPSK	13.1	5.5	CCK	12.4
18	QPSK	12.9	11	CCK	12.3
24	16-QAM	12.8			
36	16-QAM	12.5			
48	64-QAM	12.3			
54	64-QAM	12.2			

802.11 n		
Data Rate (Mbps)	Mod.	Channel 6 Max. Avg. Cond. Power (dBm)
6.5	MCS0	13.2
13	MCS1	13.1
19.5	MCS2	13.1
26	MCS3	13.0
39	MCS4	12.7
52	MCS5	12.6
58.5	MCS6	12.5
65	MCS7	12.5

Table 1.8.1-3c 802.11 b/g/n modulation type/data rate vs. conducted power at CDMA_BC1

There are two fixed Wi-Fi power reductions triggered when transmitting simultaneously with CDMA/SVLTE (data/voice) mode

1) WiFi at lower CDMA_BC1 power level.
2) WiFi at lower SVLTE_BC1_25 power level.

This report shall NOT be reproduced except in full without the written consent of RTS
Copyright 2005-2013, RTS, A division of BlackBerry Limited

802.11b @ 1Mbps			802.11g @ 6Mbps			802.11n @ 6.5 Mbps		
f (MHz)	Chan	Max. Avg. Cond. Power (dBm)	f (MHz)	Chan	Max. Avg. Cond. Power (dBm)	f (MHz)	Chan	Max. Avg. Cond. Power (dBm)
2412	1	4.8	2412	1	7.1	2412	1	7.0
2437	6	4.9	2437	6	**7.2**	2437	6	7.1
2462	11	4.5	2462	11	6.7	2462	11	6.7

802.11g			802.11b		
Data Rate (Mbps)	Mod.	Channel 6 Max. Avg. Cond. Power (dBm)	Data Rate (Mbps)	Mod.	Channel 6 Max. Avg. Cond. Power (dBm)
6	BPSK	7.2	1	BPSK	4.9
9	BPSK	7.1	2	DQPSK	4.8
12	QPSK	7.0	5.5	CCK	4.8
18	QPSK	6.8	11	CCK	4.7
24	16-QAM	6.7			
36	16-QAM	6.5			
48	64-QAM	6.3			
54	64-QAM	6.2			

802.11 n		
Data Rate (Mbps)	Mod.	Channel 6 Max. Avg. Cond. Power (dBm)
6.5	MCS0	7.1
13	MCS1	7.1
19.5	MCS2	6.9
26	MCS3	6.8
39	MCS4	6.7
52	MCS5	6.5
58.5	MCS6	6.5
65	MCS7	6.4

Table 1.8.1-3d 802.11 b/g/n modulation type/data rate vs. conducted power at SVLTE_BC1_25 power level

This report shall NOT be reproduced except in full without the written consent of RTS
Copyright 2005-2013, RTS, A division of BlackBerry Limited

802.11a (low band) 6Mbps			802.11a (mid band) 6Mbps			802.11a (upper band I) 6Mbps		
f (MHz)	**Chan**	**Max. Avg. Cond. Power (dBm)**	**f (MHz)**	**Chan**	**Max. Avg. Cond. Power (dBm)**	**f (MHz)**	**Chan**	**Max. Avg. Cond. Power (dBm)**
5180	**36**	**15.8**	**5260**	**52**	**15.5**	**5520**	**104**	**15.4**
5200	40	15.7	5280	56	15.4	5580	116	15.3
5220	44	15.6	5300	60	15.4	5620	124	15.2
5240	48	15.6	5320	64	15.3	5700	140	15.1

802.11a (upper band II) 6Mbps		
f (MHz)	**Chan**	**Max. Avg. Cond. Power (dBm)**
5745	**149**	**15.2**
5765	153	15.1
5785	157	15.1
5805	161	15.0
5825	165	15.0

		802.11a (lower band)	802.11a (middle band)	802.11a (upper band I)	802.11a (upper band II)
Data Rate (Mbits)	**Mod.**	**Channel 36**	**Channel 52**	**Channel 104**	**Channel 149**
		Max. Avg. Cond. Power (dBm)	**Max. Avg. Cond. Power (dBm)**	**Max. Avg. Cond. Power (dBm)**	**Max. Avg. Cond. Power (dBm)**
6	BPSK	15.8	15.5	15.4	15.2
9	BPSK	15.7	15.4	15.3	15.1
12	QPSK	15.6	15.3	15.2	15.1
18	QPSK	15.5	15.1	15.1	14.9
24	16-QAM	15.4	15.1	15.0	14.7
36	16-QAM	15.2	14.8	14.7	14.5
48	64-QAM	15.0	14.7	14.5	14.3
54	64-QAM	14.8	14.6	14.4	14.2

	802.11n (lower band)	802.11n (middle band)	802.11n (upper band I)	802.11n (upper band II)
Mod.	**Channel 36**	**Channel 52**	**Channel 104**	**Channel 149**
	Max. Avg. Cond. Power (dBm)	**Max. Avg. Cond. Power (dBm)**	**Max. Avg. Cond. Power (dBm)**	**Max. Avg. Cond. Power (dBm)**
MCS0	15.7	15.4	15.2	15.0
MCS1	15.6	15.3	15.1	14.9
MCS2	14.5	14.1	14.9	14.8
MCS3	14.3	14.0	14.8	14.7
MCS4	15.1	14.8	14.6	14.5

This report shall NOT be reproduced except in full without the written consent of RTS
Copyright 2005-2013, RTS, A division of BlackBerry Limited

MCS5	14.9	14.6	14.4	14.2
MCS6	14.8	14.4	13.3	13.2
MCS7	14.7	14.4	13.2	13.1

Table 1.8.1-4a 802.11 a/n modulation type/data rate vs. conducted power at full power

802.11a (low band) 6Mbps			802.11a (mid band) 6Mbps			802.11a (upper band I) 6Mbps		
f (MHz)	**Chan**	**Max. Avg. Cond. Power (dBm)**	**f (MHz)**	**Chan**	**Max. Avg. Cond. Power (dBm)**	**f (MHz)**	**Chan**	**Max. Avg. Cond. Power (dBm)**
5180	**36**	**13.0**	**5260**	**52**	**12.9**	**5520**	**104**	**12.6**
5200	40	13.0	5280	56	12.8	5580	116	12.5
5220	44	13.0	5300	60	12.7	5620	124	12.4
5240	48	12.9	5320	64	12.6	5700	140	12.4
						802.11a (upper band II) 6Mbps		
						f (MHz)	**Chan**	**Cond. Power (dBm)**
						5745	**149**	**12.5**
						5765	153	12.5
						5785	157	12.5
						5805	161	12.5
						5825	165	12.4

		802.11a (lower band)	**802.11a (middle band)**	**802.11a (upper band I)**	**802.11a (upper band II)**
Data Rate (Mbits)	**Mod.**	**Channel 36**	**Channel 52**	**Channel 104**	**Channel 149**
		Max. Avg. Cond. Power (dBm)	**Max. Avg. Cond. Power (dBm)**	**Max. Avg. Cond. Power (dBm)**	**Max. Avg. Cond. Power (dBm)**
6	BPSK	13.0	12.9	12.6	12.5
9	BPSK	13.0	12.8	12.6	12.5
12	QPSK	13.0	12.7	12.5	12.4
18	QPSK	12.9	12.6	12.3	12.3
24	16-QAM	12.8	12.5	12.2	12.1
36	16-QAM	12.6	12.2	12.0	11.9
48	64-QAM	12.3	12.1	12.0	11.7
54	64-QAM	12.2	11.9	11.7	11.6

	802.11n (lower band)	**802.11n (middle band)**	**802.11n (upper band I)**	**802.11n (upper band II)**
Mod.	**Channel 36**	**Channel 52**	**Channel 104**	**Channel 149**
	Max. Avg. Cond. Power (dBm)	**Max. Avg. Cond. Power (dBm)**	**Max. Avg. Cond. Power (dBm)**	**Max. Avg. Cond. Power (dBm)**

This report shall NOT be reproduced except in full without the written consent of RTS
Copyright 2005-2013, RTS, A division of BlackBerry Limited

MCS0	**13.0**	**13.0**	**13.0**	**12.7**
MCS1	13.0	13.0	13.0	12.7
MCS2	13.0	13.0	13.0	12.7
MCS3	13.0	13.0	13.0	12.7
MCS4	13.0	13.0	13.0	12.7
MCS5	13.0	13.0	13.0	12.7
MCS6	13.0	13.0	13.0	12.7
MCS7	13.0	13.0	13.0	12.7

Table 1.8.1-4b 802.11 a/n modulation type/data rate vs. conducted power at CDMA_BC1 power level

There are two fixed Wi-Fi power reductions triggered when transmitting simultaneously with CDMA/SVLTE (data/voice) mode

3) WiFi at lower CDMA_BC1 power level.
4) WiFi at lower SVLTE_BC1_25 power level.

802.11a (low band) 6Mbps			**802.11a (mid band) 6Mbps**			**802.11a (upper band I) 6Mbps**		
f (MHz)	**Chan**	**Max. Avg. Cond. Power (dBm)**	**f (MHz)**	**Chan**	**Max. Avg. Cond. Power (dBm)**	**f (MHz)**	**Chan**	**Max. Avg. Cond. Power (dBm)**
5180	**36**	**7.6**	**5260**	**52**	**7.4**	**5520**	**104**	**8.0**
5200	40	7.5	5280	56	7.3	5580	116	7.8
5220	44	7.5	5300	60	7.3	5620	124	7.7
5240	48	7.4	5320	64	7.2	5700	140	7.6
						802.11a (upper band II) 6Mbps		
						f (MHz)	**Chan**	**Cond. Power (dBm)**
						5745	**149**	**7.7**
						5765	153	7.7
						5785	157	7.7
						5805	161	7.6
						5825	165	7.7

		802.11a (lower band)	**802.11a (middle band)**	**802.11a (upper band I)**	**802.11a (upper band II)**
Data Rate (Mbits)	**Mod.**	**Channel 36**	**Channel 52**	**Channel 104**	**Channel 149**
		Max. Avg. Cond. Power (dBm)	**Max. Avg. Cond. Power (dBm)**	**Max. Avg. Cond. Power (dBm)**	**Max. Avg. Cond. Power (dBm)**
6	BPSK	7.6	7.4	7.9	7.7
9	BPSK	7.6	7.4	7.9	7.6
12	QPSK	7.5	7.2	7.8	7.5
18	QPSK	7.3	7.1	7.7	7.4

This report shall NOT be reproduced except in full without the written consent of RTS
Copyright 2005-2013, RTS, A division of BlackBerry Limited

24	16-QAM	7.2	7.0	7.5	7.3
36	16-QAM	7.0	6.8	7.3	7.1
48	64-QAM	6.8	6.5	7.0	6.9
54	64-QAM	6.7	6.4	6.9	6.8

	802.11n (lower band)	**802.11n (middle band)**	**802.11n (upper band I)**	**802.11n (upper band II)**
Mod.	**Channel 36**	**Channel 52**	**Channel 104**	**Channel 149**
	Max. Avg. Cond. Power (dBm)	**Max. Avg. Cond. Power (dBm)**	**Max. Avg. Cond. Power (dBm)**	**Max. Avg. Cond. Power (dBm)**
MCS0	7.6	7.4	8.0	**7.8**
MCS1	7.6	7.4	8.0	7.8
MCS2	7.6	7.4	8.0	7.8
MCS3	7.6	7.4	8.0	7.8
MCS4	7.6	7.4	8.0	7.8
MCS5	7.6	7.4	8.0	7.8
MCS6	7.6	7.4	8.0	7.8
MCS7	7.6	7.4	8.0	7.8

Table 1.8.1-4c 802.11 a/n modulation type/data rate vs. conducted power at SVLTE_BC1_25 power level

1.8.2 SAR Measurement Requirements for Bluetooth

Channel	**Freq (MHz)**	**Mode**	**Max. Peak Cond. Power (dBm)**
0	2402	DH5	9.5
39	2441	DH5	8.8
78	2480	DH5	7.8

Table 1.8.2-1 Bluetooth peak conducted power measurements

This report shall NOT be reproduced except in full without the written consent of RTS
Copyright 2005-2013, RTS, A division of BlackBerry Limited

1.8.3 SAR Evaluation Procedures for Portable Devices with Wireless Router Capabilities as per KDB 941225 D06 v01

Standalone personal wireless routers and handsets with hotspot mode capabilities must address hand-held and other near-body exposure conditions to show SAR compliance. The following procedures are applicable when the overall device length and width are ≥ 9 cm x 5 cm respectively. A test separation of 10 mm is required. SAR must be measured for all sides and surfaces with a transmitting antenna located within 25 mm from that surface or edge, for the data modes, wireless technologies and frequency bands supporting hotspot mode. The standalone SAR results in each device test orientation must be analyzed for the applicable hotspot mode simultaneous transmission configurations to determine SAR test exclusion and volume scan requirements.

Static/fixed power reduction scheme on the following modes/bands have been implemented when Hotspot Mode is enabled or active to comply with body SAR with 10 mm test separation from flat phantom on standalone transmitter and multi-band simultaneous transmission conditions:

- 802.11b: back off 5 dB

When Hotspot mode is enabled or active, all 5 GHz WiFi operations are disabled or not supported.

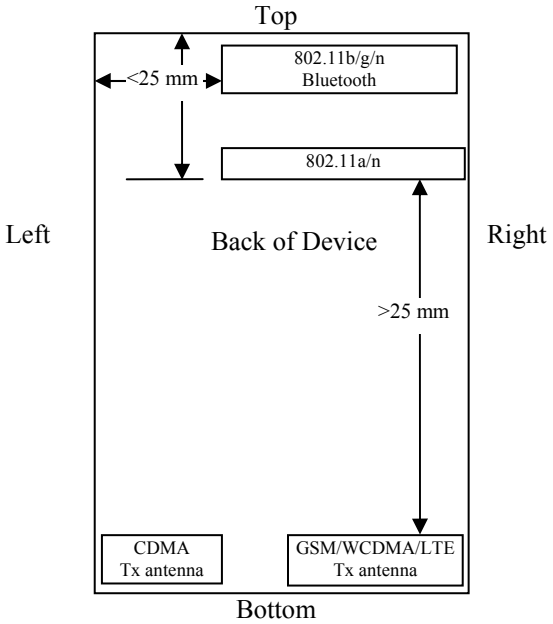

Figure 1.8.3-1 Identification of all sides for SAR Testing

Note: According to FCC guidance, Hotspot SAR testing is not required on any edge that is more than 2.5cm from the transmitting antenna.

This report shall NOT be reproduced except in full without the written consent of RTS
Copyright 2005-2013, RTS, A division of BlackBerry Limited

Hotspot Sides for SAR Testing						
Mode	**Front**	**Back**	**Top**	**Bottom**	**Left**	**Right**
CDMA800, CDMA/GPRS/WCDMA/HSPA 850/1900, LTE band 25	Yes	Yes	No	Yes	Yes	Yes
Bluetooth 2.4GHz/802.11 bgn (2.4 GHz)	Yes	Yes	Yes	No	Yes	Yes

Table 1.8.3-1 Identification of all sides for SAR Testing

1.8.4 SAR Evaluation Procedures for GSM/(E)GPRS Dual Transfer Mode as per KDB 941225 D04 v01 and SAR Test Reduction Procedures GSM GPRS EDGE as per DDB 941225 D03 vo1

- The device supports EGPRS/GPRS Multi-slot Class 12, DTM/GPRS Multi-slot Class11 and DTM/EGPRS Multi-slot Class10.
- CMU200 base station simulator with DTM software option CMU-K44 was used to set device in DTM (CS+PD) mode for testing. However, device could not be connected in DTM 4-slots uplink.
- For each slot addition in multi-slot modes (DTM, GPRS, EDGE), there is software power reduction of ~ 2 dB per slot.
- For head configurations, 1 slot CS, 2/3/4-slots (PD) and DTM (CS+PD) were evaluated.
- For body SAR configurations, 2/3/4-slots GPRS (PD) mode were tested.
- In EDGE/GPRS mode, GMSK Modulation was used using CS1-CS4 or MCSI-MCS4.
- 8-PSK modulation or MCS5-MCS9 code scheme were avoided since maximum burst avg . power was measured lower on those modulation schemes.
- Please refer to the conducted power measurements table below:

Mode	Freq. (MHz)	Channel	Max burst averaged conducted power (dBm) CS1	Max burst averaged conducted power (dBm) MCS1	Max burst averaged conducted power (dBm) MCS5	
2-slots GPRS 850 MHz	824.2	128	29.9			
	836.8	190	29.9			
	848.8	251	29.9			
3-slots GPRS 850 MHz	824.2	128	29.0			
	836.8	190	28.7			
	848.8	251	28.9			
4-slots GPRS 850 MHz	824.2	128	27.0			
	836.8	190	26.8			
	848.8	251	26.8			
2-slots EDGE 850 MHz	824.2	128	29.9	29.9	26.9	
	836.8	190	30.0	30.0	26.9	
	848.8	251	30.0	29.9	26.7	
2-slots DTM 850 MHz	824.2	128	29.7	29.6	29.6	26.9
	836.8	190	29.7	29.5	29.6	26.9
	848.8	251	29.6	29.4	29.5	26.7
3-slots EDGE	824.2	128	29.0	29.0	25.4	
	836.8	190	28.8	28.7	25.3	

This report shall NOT be reproduced except in full without the written consent of RTS
Copyright 2005-2013, RTS, A division of BlackBerry Limited

850 MHz	848.8	251	28.9	28.9	25.2	
3-slots DTM 850 MHz	824.2	128	29.0	29.0	29.0	25.4
	836.8	190	29.0	28.6	28.7	25.3
	848.8	251	29.0	28.8	28.8	25.2
4-slots EDGE 850 MHz	824.2	128	27.0	27.0	24.3	
	836.8	190	26.8	26.8	24.3	
	848.8	251	26.7	26.8	24.1	
2-slots GPRS 1900 MHz	1850.2	512	28.4			
	1880.0	661	28.2			
	1909.8	810	28.3			
3-slots GPRS 1900 MHz	1850.2	512	26.0			
	1880.0	661	25.8			
	1909.8	810	25.8			
4-slots GPRS 1900 MHz	1850.2	512	25.4			
	1880.0	661	25.3			
	1909.8	810	25.3			
2-slots EDGE 1900MHz	1850.2	512	28.4	28.4	25.3	
	1880.0	661	28.2	28.2	25.2	
	1909.8	810	28.2	28.2	25.3	
2-slots DTM 1900MHz	1850.2	512	28.2	28.1	28.1	25.3
	1880.0	661	28.1	28.1	28.1	25.2
	1909.8	810	28.1	28.1	28.1	25.3
3-slots EDGE 1900MHz	1850.2	512	26.0	26.0	24.3	
	1880.0	661	25.8	25.9	24.3	
	1909.8	810	25.8	25.8	24.3	
3-slots DTM 1900MHz	1850.2	512	25.7	25.6	25.6	24.3
	1880.0	661	25.6	25.5	25.5	24.3
	1909.8	810	25.6	25.6	25.6	24.3
4-slots EDGE 1900MHz	1850.2	512	25.4	25.4	23.3	
	1880.0	661	25.3	25.3	23.2	
	1909.8	810	25.4	25.3	23.3	

Mode	Freq. (MHz)	Channel	Max burst averaged conducted power (dBm)
1-slot GSM (CS) 850 MHz	824.2	128	32.0
	836.8	190	32.1
	848.8	251	32.1
1-slot GSM (CS) 1900 MHz	1850.2	512	28.8
	1880.0	661	28.9
	1909.8	810	28.9

1.8.4-1 GSM/EDGE/GPRS channel vs. conducted power

This report shall NOT be reproduced except in full without the written consent of RTS
Copyright 2005-2013, RTS, A division of BlackBerry Limited

1.8.5 SAR Measurement Procedure for Fast SAR Scan as per KDB 447498

- Area scan based 1-g SAR estimation.
  - Very specific implementation of fast SAR methods.
    - Reported in the 29th BEMS meeting in 2009.
    - Using the specific polynomial fit algorithm.
  - Other implementations are not considered.

- When estimated 1-g SAR is ≤ 1.2 W/kg, zoom scan is not required according to the following:
  - Zoom scan is not required for any other purposes.
  - Peaks are distinctively identified in the area scan.
  - No sharp gradients: SAR at 1 cm from peak ≥ 40% of peak value.
  - No measurement warnings or alerts for other measurement issues.

- 1-g SAR for estimated & zoom scan in the system verification (dipole) must be within 3% of each other to utilize Fast SAR.
- 1g Fast SAR values for dipole validation scans are generally more conservative than the standard SAR scans.
- Regardless of the SAR value, a zoom scan is required for the highest SAR configuration in each frequency band and wireless mode.
- Fast SAR Algorithm: The approach is based on the area scan using DASY5 system.

This report shall NOT be reproduced except in full without the written consent of RTS
Copyright 2005-2013, RTS, A division of BlackBerry Limited

1.8.6 SAR Measurement Procedures for 3G Devices

WCDMA Handsets

Output Power Verification

• Maximum output power is verified on the High, Middle and Low channels using 12.2 kbps RMC, 12.2 kbps AMR with a 3.4 kbps SRB (signal radio bearer) with TPC (transmit power control) set to all "1's" for WCDMA/HSPA or applying the required inner loop.

• For Release 6 HSPA/Release 7 HSDPA$^+$, output power is measured according to requirements for HS-DPCCH Sub-test 1-4/1-5 and 3GPP TS 34.121.

Head SAR Measurements

SAR for head exposure configurations is measured using the 12.2 kbps RMC with TPC bits configured to all "1s". SAR in AMR configurations is not required when the maximum average output of each RF channel for 12.2 kbps AMR is less than ¼ dB higher than that measured in 12.2 kbps RMC. Otherwise, SAR is measured on the maximum output channel in 12.2 AMR with a 3.4 kbps SRB (signalling radio bearer) using the exposure configuration that results in the highest SAR for that RF channel in 12.2 RMC.

Body SAR Measurements

SAR for body exposure configurations is measured using the 12.2 kbps RMC with the TPC bits configured to all "1s". SAR for other spreading codes and multiple $DPDCH_n$, when supported by the DUT, are not required when the maximum average outputs of each RF channel, for each spreading code and $DPDCH_n$ configuration, are less than ¼ dB higher than those measured in 12.2 RMC. Otherwise, SAR is measured on the maximum output channel with an applicable RMC configuration for the corresponding spreading code or $DPDCH_n$ using the exposure configuration that results in the highest SAR with 12.2 RMC.

Handsets with HSPA

Body SAR is not required for handsets with HSPA/HSPA+ capabilities, when the maximum average output of each RF channel with HSPA active is less than ¼ dB higher than that measured in 12.2 kbps RMC without HSPA/HSPA+. Otherwise, SAR for HSPA is measured using FRC (fixed reference channel) in the body exposure configuration that results in the highest SAR for that RF channel in 12.2kbps RMC.

1.8.7 Test Seup information for WCDMA / HSPDA / HSUPA

a) WCDMA RMC

In RMC (reference measurement channel) mode the conducted power at 4 different bit rates were measured. They correspond with the used spreading factors as follows:

Bit rate	***12.2 kbit/s***	***64 kbit/s***	***144 kbit/s***	***384 kbit/s***
Spreading factor (SF)	64	16	8	4

This report shall NOT be reproduced except in full without the written consent of RTS
Copyright 2005-2013, RTS, A division of BlackBerry Limited

In RMC mode only DPCCH and DPDCH are active. As bit rate changes do not influence the relative power of any code channel the measured RMS output power remains on the same level which is set to maximum by TPC (Transmit power control) pattern type 'All 1'.

b) HSDPA

HSDPA adds the HS-DPCCH in uplink as a control channel for high speed data transfer in downlink.
In HSDPA mode 4 sub-tests are defined by 3GPP 34.121 according to the following table:

Sub-test	β_c	β_d	β_d (SF)	β_c/β_d	β_{hs} (1)	CM(dB) (2)
1	2/15	15/15	64	2/15	4/15	0.0
2	12/15 (3)	15/15 (3)	64	12/15 (3)	24/15	1.0
3	15/15	8/15	64	15/8	30/15	1.5
4	15/15	4/15	64	15/4	30/15	1.5

Note 1: Δ_{ACK}, Δ_{NACK}, Δ_{CQI} = 8 $\Longleftrightarrow$ $A_{hs} = \beta_{hs}/\beta_c$ = 30/15 $\Longleftrightarrow$ β_{hs} = 30/15 * β_c
Note 2 : CM = 1 for β_c/β_d = 12/15, β_{hs}/β_c = 24/15
Note 3 : For subtest 2 the β_c/β_d ratio of 12/15 for the TFC during the measurement period (TF1, TF0) is achieved by setting the signalled gain factors for the reference TFC (TF1,TF1) to β_c = 11/15 and β_d = 15/15

Table 1.8.7-1 Sub-tests for UMTS Release 5 HSDPA

The β_c and β_d gain factors for DPCCH and DPDCH were set according to the values in the above table, β_{hs} for HS-DPCCH is set automatically to the correct value when Δ_{ACK}, Δ_{NACK}, Δ_{CQI} = 8. The variation of the β_c/β_d ratio causes a power reduction at sub-tests 2 - 4.
The measurements were performed with a Fixed Reference Channel (FRC) and H-Set 1 QPSK.

Parameter	***Value***
Nominal average inf. bit rate	534 kbit/s
Inter-TTI Distance	3 TTI's
Number of HARQ Processes	2 Processes
Information Bit Payload	3202 Bits
MAC-d PDU size	336 Bits
Number Code Blocks	1 Block
Binary Channel Bits Per TTI	4800 Bits
Total Available SMLs in UE	19200 SMLs
Number of SMLs per HARQ Process	9600 SMLs
Coding Rate	0.67
Number of Physical Channel Codes	5

Table 1.8.7-2 Settings of required H-Set 1 QPSK acc. to 3GPP 34.121

This report shall NOT be reproduced except in full without the written consent of RTS
Copyright 2005-2013, RTS, A division of BlackBerry Limited

c) DC-HSDPA (3GPP Release 8)

Dual Cell – HSDPA has been signalized using the following settings for connection setup:

Parameter During Connection Setup	Value
P-CPICH_Ec/Ior	-10 dB
P-CCPCH	-12
SCH_Ec/Ior	-12
PICH_Ec/Ior	-15
HS-PDSCH	off
HS-SCCH_1	off
DPCH_Ec/Ior	-5
OCNS_Ec/Ior	-3.1

Table 1.8.7-3 Downlink Physical Channels according to 3GPP 34.121 Table E.5.0

The fixed reference channel has been set to H-set 12 according to 3GPP TS 34.121 Table C.8.1.12:

Parameter	Unit	Value
Nominal Average Inf. Bit Rate	kbit/s	60
Inter-TTI Distance	TTI's	1
Information Bit Payload (N_{INF})	Bits	120
Number Code Blocks	Blocks	1
Binary Channel Bits Per TTI	Bits	960
Total Available SML's in UE	SML's	19200
Number of SML's per HARQ Process	SML's	3200
Coding Rate		0.15
Number of Physical Channel Codecs	Codecs	1
Modulation		QPSK
Note 1: The RMC is intended to be used for DC-HSDPA mode and both cells shall transmit with identical parameters as listed in the table. Note 2: Maximum number of transmission is limited to 1, i.e., retransmission is not allowed. The redundancy and constellation version 0 shall be used.		

Table 1.8.7-4 H-Set 12 QPSK configuration

The same Sub-test settings as for Release 5 HSDPA were used for the tests.

This report shall NOT be reproduced except in full without the written consent of RTS
Copyright 2005-2013, RTS, A division of BlackBerry Limited

d) HSUPA

In HSUPA mode additional code channels (E-DPCCH, E-DPDCHn) are added for data transfer in uplink at higher bit rates.

5 sub-tests are defined by 3GPP 34.121 according to the following table :

Sub-test	β_c	β_d	β_d (SF)	β_c/β_d	β_{hs} (1)	β_{ec}	β_{ed}	β_{ec} (SF)	β_{ed} (code)	CM (2) (dB)	MPR (dB)	AG (4) Index	E-TFCI
1	11/15 (3)	15/15 (3)	64	11/15 (3)	22/15	209/225	1039/225	4	1	1.0	0.0	20	75
2	6/15	15/15	64	6/15	12/15	12/15	94/75	4	1	3.0	2.0	12	67
3	15/15	9/15	64	15/9	30/15	30/15	β_{ed1}:47/15 β_{ed2}:47/15	4	2	2.0	1.0	15	92
4	2/15	15/15	64	2/15	4/15	2/15	56/75	4	1	3.0	2.0	17	71
5	15/15 (4)	15/15 (4)	64	15/15 (4)	30/15	24/15	134/15	4	1	1.0	0.0	21	81

Note 1: Δ_{ACK}, Δ_{NACK}, Δ_{CQI} = 8 $\Longleftrightarrow$ $A_{hs} = \beta_{hs}/\beta_c$ = 30/15 $\Longleftrightarrow$ β_{hs} = 30/15 * β_c
Note 2 : CM = 1 for β_c/β_d = 12/15, β_{hs}/β_c = 24/15. For all other combinations of DPDCH, DPCCH, HS-DPCCH, E-DPDCH and E-DPCCH the MPR is based on the relative CM difference
Note 3 : For subtest 1 the β_c/β_d ratio of 11/15 for the TFC during the measurement period (TF1, TF0) is achieved by setting the signalled gain factors for the reference TFC (TF1,TF1) to β_c = 10/15 and β_d = 15/15
Note 4 : For subtest 5 the β_c/β_d ratio of 15/15 for the TFC during the measurement period (TF1, TF0) is achieved by setting the signalled gain factors for the reference TFC (TF1,TF1) to β_c = 14/15 and β_d = 15/15
Note 5 : Testing UE using E-DPDCH Physical Layer category 1 Sub-test 3 is not required according to TS 25.306 Table 5.1g
Note 6 : β_{ed} can not be set directly; it is set by Absolute Grant Value

Table 1.8.7-5 Subtests for UMTS Release 6 HSUPA

To achieve the settings above some additional procedures were defined by 3GPP 34.121. Those have been included in an application note for the CMU200 and were exactly followed :

- Test mode connection (BS signal tab) :
RMC 12.2 kbit/s + HSPA 34.108 with loop mode 1
- HS-DSCH settings (BS signal tab):
- FRC with H-set 1 QPSK
- ACK-NACK repetition factor = 3
- CQI feedback cycle = 4ms
- CQI repetition factor = 2
- HSUPA-specific signalling settings (UE signal tab) :
- E-TFCI table index = 0
- E-DCH minimum set E-TFCI = 9
- Puncturing limit non-max = 0.84
- max. number of channelisation codes = 2x SF4
- Initial Serving Grant Value = Off
- HSDPA and HSUPA Gain factors (UE signal tab)

This report shall NOT be reproduced except in full without the written consent of RTS
Copyright 2005-2013, RTS, A division of BlackBerry Limited

Sub-test	β_c	β_d	Δ_{ACK}, Δ_{NACK}, Δ_{CQI}	ΔE–DPCCH *
1	10	15	8	6
2	6	15	8	8
3	15	9	8	8
4	2	15	8	5
5	14	15	8	7

*** β_{ec} and β_{ed} ratios (relative to β_c and β_d) are set by ΔE–DPCCH**

- HSUPA Reference E-TFCIs (UE signal tab > HSUPA gain factors) :

Sub-test	**1, 2, 4, 5**				
Number of E-TFCIs	5				
Reference E-TFCI	11	67	71	75	81
Reference E-TFCI power offset	4	18	23	26	27

Sub-test	**3**	
Number of E-TFCIs	2	
Reference E-TFCI	11	92
Reference E-TFCI power offset	4	18

- HSUPA-specific generator parameters (BS Signal tab > HSUPA > E-AGCH > AG Pattern)

Sub-test	***Absolute Grant Value (AG Index)***
1	20
2	12
3	15
4	17
5	21

- Power Level settings (BS Signal tab > Node B-settings):
- Level reference : Output Channel Power (lor)
- Output Channel Power (lor) : -86 dBm

- Downlink Physical Channel Settings (BS signal tab)
- P-CPICH : -10 dB
- S-CPICH : Off
- P-SCH : -15 dB
- S-SCH : -15 dB
- P-CCPCH : -12 dB
- S-CCPCH : -12 dB
- PICH : -15 dB
- AICH : -12 dB
- DPDCH : -10 dB
- HS-SCCH : -8 dB

This report shall NOT be reproduced except in full without the written consent of RTS
Copyright 2005-2013, RTS, A division of BlackBerry Limited

- HS-PDSCH : -3 dB
- E-AGCH : -20 dB
- E-RGCH/E-HICH - 20 dB
- E-RGCH Active : Off

The settings above were stored once for each sub-test and recalled before the measurement.

To reach maximum output power in HSUPA mode the following procedures were followed:

3 different TPC patterns were defined :
Set 1 : Closed loop with target power 10 dBm
Set 2 : Single Pattern+Alternating with binary pattern '11111' for 1 dB steps 'up'
Set 3 : Single Pattern+Alternating with binary pattern '00000' for 1 dB steps 'down'

After recalling a certain HSUPA sub-test the HSUPA E-AGCH graph with E-TFCI event counter is displayed. After starting with the closed loop command the power is increased in 1 dB steps by activating pattern set 2 until the UE decreases the transmitted E-TFCI.
At this point set 3 is activated once to reduce the output power to the value at which the original E-TFCI, which is required for the sub-test, appears again.

For conducted power measurements the same steps are repeated in the power menu to read out the corresponding maximum RMS output power with the target E-TFCI.
For SAR measurements it is useful to switch to Code Domain Power vs. Time display.
Here the CMU200 shows relative power values (max. and min.) of each code channel which should roughly correspond to the numerators of the gain factors e.g. :

Sub-test	β_c	β_d	β_{hs}	β_{ec}	β_{ed}
5	15	15	30	24	134

This report shall NOT be reproduced except in full without the written consent of RTS
Copyright 2005-2013, RTS, A division of BlackBerry Limited

	Band	**FDD V (850)**		
	Freq (MHz)	826.4	836.4	846.6
	Channel	4132	4182	4233
Mode	**Subtest**	**Max burst averaged conducted power (dBm)**		
Rel99	12.2 kbps RMC	23.1	23.1	22.9
Rel99	12.2kbps, Voice, AMR, SRB 3.4 kbps	23.1	23.1	22.9
HSUPA	1	21.6	21.8	21.4
HSUPA	2	21.3	21.6	21.1
HSUPA	3	22.2	22.3	21.9
HSUPA	4	22.0	22.2	21.8
HSUPA	5	21.2	21.3	21.0
HSDPA+	1	22.2	22.3	21.9
HSDPA+	2	21.1	20.9	20.8
HSDPA+	3	20.3	20.2	19.9
HSDPA+	4	19.1	19.0	18.9
	Band	**FDD II (1900)**		
	Freq (MHz)	1852.4	1880.0	1907.6
	Channel	9262	9400	9538
Mode	**Subtest**	**Max burst averaged conducted power (dBm)**		
Rel99	12.2 kbps RMC	23.0	23.0	23.0
Rel99	12.2 kbps, Voice, AMR, SRB 3.4 kbps	23.0	22.9	22.9
HSUPA	1	21.5	21.3	21.4
HSUPA	2	21.2	21.2	21.1
HSUPA	3	21.9	21.8	21.9
HSUPA	4	21.9	21.8	21.9
HSUPA	5	21.2	20.9	20.9
HSDPA+	1	22.0	22.0	22.0
HSDPA+	2	20.6	20.5	20.7
HSDPA+	3	20.1	20.2	20.3
HSDPA+	4	18.9	19.1	19.0

Table 1.8.7-6 WCDMA (Rel99) / HSPA/HSPA+ conducted power measurements

This report shall NOT be reproduced except in full without the written consent of RTS
Copyright 2005-2013, RTS, A division of BlackBerry Limited

1.8.8 FCC SAR Measurement Procedures for 3G Devices CDMA 2000

The followings are the **FCC SAR Measurement Procedures for 3G Devices issued in Oct. 2006**, applicable to handsets operating under CDMA 2000, Release 0, with MS Protocol Revision 6 (**P_REV 6**). The default test configuration is to measure SAR in RC3 with an established radio link between the DUT and a communication test set. SAR in RC1 is selectively confirmed according to output power and exposure conditions.

Output Power Verification

Maximum output power is verified on the High, Middle and Low channels according to procedures in section 4.4.5.2 of 3GPP2 C.S0011/TIA-98-E. Results for at least steps 3, 4 and 10 of the power measurement procedures should be tabulated in the SAR report as shown on Table 1.8.3-3 Steps 3 and 4 should be measured using SO55 with power control bits in "All Up" condition. TDSO / SO32 may be used instead of SO55 for step 4. Step 10 should be measured using TDSO / SO32 with power control bits in the "Bits Hold" condition (i.e. alternative Up/Down Bits).

3GPP2 C.S0011/ TIA-98-E, section 4.4.5.2 Method of Measurement

1. If the mobile station supports Reverse Traffic Channel Radio Configuration 1 and 7 Forward Traffic Channel Radio Configuration 1, set up a call using Fundamental 8 Channel Test Mode 1 with 9600 bps data rate only and perform steps 6 through 8.
2. If the mobile station supports the Radio Configuration 3 Reverse Fundamental 11 Channel and demodulation of Radio Configuration 3, 4, or 5, set up a call using 12 Fundamental Channel Test Mode 3 with 9600 bps data rate only and 13 perform steps 6 through 8.
3. Set the test parameters as specified in **Table 1.8.8-1**
4. Send continuously '0' power control bits to the mobile station.
5. Measure the mobile station output power at the mobile station antenna connector.
6. If the mobile station supports the Radio Configuration 3 Reverse Fundamental Channel, Radio Configuration 3 Reverse Supplemental Channel 0 and demodulation of Radio Configuration 3, 4, or 5, set up a call using Supplemental Channel Test Mode 3 with 9600 bps Fundamental Channel and 9600 bps Supplemental Channel 0 data rate, and perform the following:
a) Set the test parameters as specified in **Table 1.8.8-2**
b) Send alternating '0' and '1' power control bits to the mobile station using the smallest supported closed loop power control step size supported by the mobile station.
c) Determine the active channel configuration. If the desired channel configuration is not active, increase by 1 dB and repeat the verification. Repeat this step until the desired channel configuration becomes active.
d) Measure the mobile station output power at the mobile station antenna connector and record reading.

Parameter	Units	Value
$\hat{I}_{or}$	dBm/1.23 MHz	-104
$\frac{\text{Pilot } E_c}{I_{or}}$	dB	-7
$\frac{\text{Traffic } E_c}{I_{or}}$	dB	-7.4

Table 1.8.8-1

Parameter	Units	Value
$\hat{I}_{or}$	dBm/1.23 MHz	-86
$\frac{\text{Pilot } E_c}{I_{or}}$	dB	-7
$\frac{\text{Traffic } E_c}{I_{or}}$	dB	-7.4

Table 1.8.8-2

Test Parameters for Maximum RF Output Power for Spreading Rate 1

This report shall NOT be reproduced except in full without the written consent of RTS
Copyright 2005-2013, RTS, A division of BlackBerry Limited

Head SAR Measurements

SAR for head exposure configurations is measured in RC3 with the DUT configured to transmit at full rate using Loopback Service Option SO55. SAR for RC1 is not required when the maximum average output of each channel is less than ¼ dB higher than that measured in RC3. Otherwise, SAR is measured on the maximum output channel in RC1 using the exposure configuration that results in the highest SAR for that channel in RC3.

Body SAR Measurements

SAR for body exposure configurations is measured in RC3 with the DUT configured to transmit at full rate on FCH with all other code channels disabled using TDSO / SO32. SAR for multiple code channels (FCH + SCH_n) is not required when the maximum average output of each RF channel is less than ¼ dB higher than that measured with FCH only. Otherwise, SAR is measured on the maximum output channel (FCH + SCH_n) with FCH at full rate and SCH_0 enabled at 9600 bps using the exposure configuration that results in the highest SAR for that channel with FCH only. When multiple code channels are enabled, the DUT output may shift by more than 0.5 dB and lead to higher SAR drifts and SCH dropouts.

Body SAR in RC1 is not required when the maximum average output of each channel is less than ¼ dB higher than that measured in RC3. Otherwise, SAR is measured on the maximum output channel in RC1; with Loopback Service Option SO55, at full rate, using the body exposure configuration that results in the highest SAR for that channel in RC3.

1x Ev-DO

For handsets with Ev-Do capabilities, when the maximum average output of each channel in Rev. 0 is less than ¼ dB higher than that measured in RC3 (1x RTT), body SAR for Ev-Do is not required. Otherwise, SAR for Rev. 0 is measured on the maximum output channel at 153.6 kbps using the body exposure configuration that results in the highest SAR for that channel in RC3. SAR for Rev. A is not required when the maximum average output of each channel is less than that measured in Rev. 0 or less than ¼ dB higher than that measured in RC3. Otherwise, SAR is measured on the maximum output channel for Rev. A using a Reverse Data Channel payload size of 4096 bits and a Termination Target of 16 slots defined for Subtype 2 Physical Layer configurations. A Forward Traffic Channel data rate corresponding to the 2-slot version of 307.2 kbps with the ACK Channel transmitting in all slots should be configured in the downlink for both Rev. 0 and Rev. A.

This report shall NOT be reproduced except in full without the written consent of RTS
Copyright 2005-2013, RTS, A division of BlackBerry Limited

Band	**Freq. (MHz)**	**Ch.**	**1xEvDO (153.6kbps) Rev 0 (dBm)**	**1xEvDO (153.6kbps) Rev A (dBm)**	**CDMA2000 RC**	**S02 Loopback (dBm)**	**S055 Loopback (dBm)**	**TDSO S032 Test Data Service (dBm)**
CDMA 800 BC10	817.9	476	24.3	24.4	RC1	24.5	24.5	N/A
					RC3	24.5	24.5	24.5
	820.5	580	24.1	24.1	RC1	24.3	24.3	N/A
					RC3	24.3	24.3	24.3
	823.1	684	24.2	24.2	RC1	24.3	24.3	N/A
					RC3	24.3	24.3	24.3
CDMA 850 BC0	824.70	1013	24.3	24.3	RC1	24.4	24.4	N/A
					RC3	24.4	24.4	24.4
	836.52	384	24.1	24.1	RC1	24.1	24.1	N/A
					RC3	24.1	24.1	24.2
	848.52	777	24.0	24.0	RC1	24.1	24.0	N/A
					RC3	24.0	24.1	24.1
CDMA 1900 BC1	1851.25	25	23.8	23.9	RC1	24.0	23.9	N/A
					RC3	23.8	23.9	23.91
	1880.00	600	23.9	23.9	RC1	24.0	24.0	N/A
					RC3	24.0	24.0	23.94
	1908.50	1175	23.9	23.9	RC1	23.9	23.9	N/A
					RC3	24.0	23.9	23.93

Table 1.8.8-3: Max. Avg. Conducted RF output power (dBm) measured for various settings

This report shall NOT be reproduced except in full without the written consent of RTS
Copyright 2005-2013, RTS, A division of BlackBerry Limited

1.8.9 SAR Evaluation Procedures for LTE as per KDB 941225 D05 v02

"1. QPSK with 1 RB allocation

Start with the largest channel bandwidth and measure SAR for QPSK with 1 RB allocation, using the RB offset and *required test channel* combination with the highest maximum output power for RB offsets at the upper edge, middle and lower edge of each *required test channel*. When the *reported* SAR is ≤ 0.8 W/kg, testing of the remaining RB offset configurations and *required test channels* is not required for 1 RB allocation; otherwise, SAR is required for the remaining *required test channels* and only for the RB offset configuration with the highest output power for that channel.6 When the *reported* SAR of a *required test channel* is > 1.45 W/kg, SAR is required for all three RB offset configurations for that *required test channel*.

2. QPSK with 50% RB allocation

The procedures required for 1 RB allocation in 1. are applied to measure the SAR for QPSK with 50% RB allocation.

3. QPSK with 100% RB allocation

For QPSK with 100% RB allocation, SAR is not required when the highest maximum output power for 100 % RB allocation is less than the highest maximum output power in 50% and 1 RB allocations and the highest *reported* SAR for 1 RB and 50% RB allocation in 1. and 2. are ≤ 0.8 W/kg. Otherwise, SAR is measured for the highest output power channel and if the *reported* SAR is > 1.45 W/kg, the remaining *required test channels* must also be tested.

Higher order modulations

For each modulation besides QPSK; e.g., 16-QAM, 64-QAM, apply the QPSK procedures in sections 1. and 2.and 3. to determine the QAM configurations that may need SAR measurement.

For each configuration identified as required for testing, SAR is required only when the highest maximum output power for the configuration in the higher order modulation is > ½ dB higher than the same configuration in QPSK or when the *reported* SAR for the QPSK configuration is > 1.45 W/kg.

4. Other channel bandwidth standalone SAR test requirements

For the other channel bandwidths used by the device in a frequency band, apply all the procedures required for the largest channel bandwidth in section 5.2 to determine the channels and RB configurations that need SAR testing and only measure SAR when the highest maximum output power of a configuration requiring testing in the smaller channel bandwidth is > ½ dB higher than the equivalent channel configurations in the largest channel bandwidth configuration or the *reported* SAR of a configuration for the largest channel bandwidth is > 1.45 W/kg.

The equivalent channel configuration for the RB allocation, RB offset and modulation etc. Is determined for the smaller channel bandwidth according to the same number of RB allocated in the largest channel bandwidth. For example, 50 RB in 10 MHz channel bandwidth does not apply to 5 MHz channel bandwidth; therefore, this cannot be tested in the smaller channel bandwidth. However, 50% RB allocation in 10 MHz channel bandwidth is equivalent to 100% RB allocation in 5 MHz channel bandwidth; therefore, these are the equivalent configurations to be compared to determine the specific channel and configuration in the smaller channel bandwidth that need SAR testing."

This report shall NOT be reproduced except in full without the written consent of RTS
Copyright 2005-2013, RTS, A division of BlackBerry Limited

• MPR has been implemented permanently by the manufacturer as per 3GPP TS36.101
• A-MPR was disabled for all SAR measurements.
•LTE Head SAR was evaluated to cover third-party VoIP applications at full power.
•LTE Head SAR was evaluated in SVLTE mode at lowered LTE power.

• According to "3GPP TS 36.521-1 V10.0.0 (2011-12)":
•"The channel numbers that designate carrier frequencies so close to the operating band edges that the carrier extends beyond the operating band edge shall not be used. This implies that the first 7, 15, 25, 50, 75 and 100 channel numbers at the lower operating band edge and the last 6, 14, 24, 49, 74 and 99 channel numbers at the upper operating band edge shall not be used for channel bandwidths of 1.4, 3, 5, 10, 15 and 20 MHz respectively."…

LTE band	BW (MHz)	Mod.	Channel	RB#	Offset	Max. Avg. Tx Power (dBm)
25	20	QPSK	26140	1	LOW	23.05
25	20	QPSK	26140	1	MID	23.06
25	20	QPSK	26140	1	HIGH	23.20
25	20	QPSK	26140	50	LOW	21.95
25	20	QPSK	26140	50	HIGH	22.23
25	20	QPSK	26140	100	LOW	22.11
25	20	Q16	26140	1	LOW	21.98
25	20	Q16	26140	1	MID	22.08
25	20	Q16	26140	1	HIGH	22.23
25	20	Q16	26140	75	LOW	20.99
25	20	Q16	26140	75	HIGH	21.11
25	20	Q16	26140	100	LOW	21.09
25	20	QPSK	26365	1	LOW	23.16
25	20	QPSK	26365	1	MID	23.18
25	20	QPSK	26365	1	HIGH	22.72
25	20	QPSK	26365	50	LOW	22.12
25	20	QPSK	26365	50	HIGH	22.13
25	20	QPSK	26365	100	LOW	22.12
25	20	Q16	26365	1	LOW	22.90
25	20	Q16	26365	1	MID	22.91
25	20	Q16	26365	1	HIGH	22.41
25	20	Q16	26365	75	LOW	21.06
25	20	Q16	26365	75	HIGH	21.05
25	20	Q16	26365	100	LOW	21.05
25	20	QPSK	26590	1	LOW	22.52

This report shall NOT be reproduced except in full without the written consent of RTS
Copyright 2005-2013, RTS, A division of BlackBerry Limited

25	20	QPSK	26590	1	MID	23.04
25	20	QPSK	26590	1	HIGH	22.49
25	20	QPSK	26590	50	LOW	21.91
25	20	QPSK	26590	50	HIGH	21.93
25	20	QPSK	26590	100	LOW	21.86
25	20	Q16	26590	1	LOW	21.70
25	20	Q16	26590	1	MID	22.07
25	20	Q16	26590	1	HIGH	21.57
25	20	Q16	26590	75	LOW	20.88
25	20	Q16	26590	75	HIGH	20.95
25	20	Q16	26590	100	LOW	20.87
25	15	QPSK	26365	1	LOW	23.17
25	15	QPSK	26365	1	MID	23.21
25	15	QPSK	26365	1	HIGH	22.95
25	15	QPSK	26365	36	LOW	22.17
25	15	QPSK	26365	36	HIGH	22.17
25	15	QPSK	26365	75	LOW	22.10
25	15	Q16	26365	1	LOW	22.17
25	15	Q16	26365	1	MID	22.14
25	15	Q16	26365	1	HIGH	21.91
25	15	Q16	26365	16	LOW	22.19
25	15	Q16	26365	16	HIGH	22.16
25	15	Q16	26365	75	LOW	21.14
25	10	QPSK	26365	1	LOW	22.99
25	10	QPSK	26365	1	MID	23.22
25	10	QPSK	26365	1	HIGH	23.06
25	10	QPSK	26365	25	LOW	22.21
25	10	QPSK	26365	25	HIGH	22.19
25	10	QPSK	26365	50	LOW	22.15
25	10	Q16	26365	1	LOW	22.71
25	10	Q16	26365	1	MID	22.86
25	10	Q16	26365	1	HIGH	22.62
25	10	Q16	26365	30	LOW	21.33
25	10	Q16	26365	30	HIGH	21.23
25	10	Q16	26365	50	LOW	21.25
25	5	QPSK	26365	1	LOW	22.98
25	5	QPSK	26365	1	MID	23.27
25	5	QPSK	26365	1	HIGH	23.21

This report shall NOT be reproduced except in full without the written consent of RTS
Copyright 2005-2013, RTS, A division of BlackBerry Limited

25	5	QPSK	26365	10	LOW	22.24
25	5	QPSK	26365	10	HIGH	22.34
25	5	QPSK	26365	25	LOW	22.28
25	5	Q16	26365	1	LOW	21.88
25	5	Q16	26365	1	MID	21.90
25	5	Q16	26365	1	HIGH	21.90
25	5	Q16	26365	8	LOW	22.29
25	5	Q16	26365	8	HIGH	22.37
25	5	Q16	26365	25	LOW	21.35
25	3	QPSK	26365	1	LOW	23.01
25	3	QPSK	26365	1	MID	23.22
25	3	QPSK	26365	1	HIGH	23.13
25	3	QPSK	26365	6	LOW	22.32
25	3	QPSK	26365	6	HIGH	22.31
25	3	QPSK	26365	15	LOW	22.29
25	3	Q16	26365	1	LOW	22.78
25	3	Q16	26365	1	MID	22.84
25	3	Q16	26365	1	HIGH	22.71
25	3	Q16	26365	4	LOW	22.41
25	3	Q16	26365	4	HIGH	22.54
25	3	Q16	26365	15	LOW	21.44
25	14	QPSK	26365	1	LOW	23.15
25	14	QPSK	26365	1	MID	23.21
25	14	QPSK	26365	1	HIGH	23.27
25	14	QPSK	26365	3	LOW	23.30
25	14	QPSK	26365	3	HIGH	23.25
25	14	QPSK	26365	6	LOW	22.44
25	14	Q16	26365	1	LOW	22.07
25	14	Q16	26365	1	MID	22.06
25	14	Q16	26365	1	HIGH	22.09
25	14	Q16	26365	5	LOW	22.34
25	14	Q16	26365	5	HIGH	22.39
25	14	Q16	26365	6	LOW	21.39

Table 1.8.9-1 LTE band 25 conducted power measurements at full power

This report shall NOT be reproduced except in full without the written consent of RTS
Copyright 2005-2013, RTS, A division of BlackBerry Limited

LTE Band	BW (MHz)	Mod.	Channel	RB#	Offset	Max. Avg. Tx Power (dBm)
25	20	QPSK	26140	1	LOW	18.27
25	20	QPSK	26140	1	MID	18.32
25	20	QPSK	26140	1	HIGH	18.59
25	20	QPSK	26140	50	LOW	17.83
25	20	QPSK	26140	50	HIGH	17.77
25	20	QPSK	26140	100	LOW	17.69
25	20	Q16	26140	1	LOW	17.58
25	20	Q16	26140	1	MID	18.00
25	20	Q16	26140	1	HIGH	17.70
25	20	Q16	26140	75	LOW	16.54
25	20	Q16	26140	75	HIGH	16.41
25	20	Q16	26140	100	LOW	16.37
25	20	QPSK	26365	1	LOW	18.60
25	20	QPSK	26365	1	MID	18.78
25	20	QPSK	26365	1	HIGH	18.04
25	20	QPSK	26365	50	LOW	17.57
25	20	QPSK	26365	50	HIGH	17.83
25	20	QPSK	26365	100	LOW	17.69
25	20	Q16	26365	1	LOW	17.83
25	20	Q16	26365	1	MID	18.44
25	20	Q16	26365	1	HIGH	17.97
25	20	Q16	26365	75	LOW	16.52
25	20	Q16	26365	75	HIGH	16.68
25	20	Q16	26365	100	LOW	16.65
25	20	QPSK	26590	1	LOW	17.84
25	20	QPSK	26590	1	MID	18.52
25	20	QPSK	26590	1	HIGH	17.94
25	20	QPSK	26590	50	LOW	17.43
25	20	QPSK	26590	50	HIGH	17.37
25	20	QPSK	26590	100	LOW	17.39
25	20	Q16	26590	1	LOW	17.44
25	20	Q16	26590	1	MID	17.86
25	20	Q16	26590	1	HIGH	17.19
25	20	Q16	26590	75	LOW	16.52

This report shall NOT be reproduced except in full without the written consent of RTS
Copyright 2005-2013, RTS, A division of BlackBerry Limited

25	20	Q16	26590	75	HIGH	16.37
25	20	Q16	26590	100	LOW	16.43
25	15	QPSK	26365	1	LOW	18.68
25	15	QPSK	26365	1	MID	18.69
25	15	QPSK	26365	1	HIGH	18.30
25	15	QPSK	26365	36	LOW	17.70
25	15	QPSK	26365	36	HIGH	17.92
25	15	QPSK	26365	75	LOW	17.77
25	15	Q16	26365	1	LOW	17.81
25	15	Q16	26365	1	MID	18.45
25	15	Q16	26365	1	HIGH	17.96
25	15	Q16	26365	16	LOW	17.96
25	15	Q16	26365	16	HIGH	17.81
25	15	Q16	26365	75	LOW	17.09
25	10	QPSK	26365	1	LOW	18.50
25	10	QPSK	26365	1	MID	18.56
25	10	QPSK	26365	1	HIGH	18.62
25	10	QPSK	26365	25	LOW	17.55
25	10	QPSK	26365	25	HIGH	17.76
25	10	QPSK	26365	50	LOW	17.59
25	10	Q16	26365	1	LOW	17.89
25	10	Q16	26365	1	MID	18.18
25	10	Q16	26365	1	HIGH	17.80
25	10	Q16	26365	30	LOW	16.50
25	10	Q16	26365	30	HIGH	16.57
25	10	Q16	26365	50	LOW	16.40
25	5	QPSK	26365	1	LOW	18.25
25	5	QPSK	26365	1	MID	18.68
25	5	QPSK	26365	1	HIGH	18.61
25	5	QPSK	26365	10	LOW	17.40
25	5	QPSK	26365	10	HIGH	17.55
25	5	QPSK	26365	25	LOW	17.47
25	5	Q16	26365	1	LOW	17.31
25	5	Q16	26365	1	MID	17.51
25	5	Q16	26365	1	HIGH	17.22
25	5	Q16	26365	8	LOW	17.50
25	5	Q16	26365	8	HIGH	17.29
25	5	Q16	26365	25	LOW	16.22

This report shall NOT be reproduced except in full without the written consent of RTS
Copyright 2005-2013, RTS, A division of BlackBerry Limited

25	3	QPSK	26365	1	LOW	18.45
25	3	QPSK	26365	1	MID	18.77
25	3	QPSK	26365	1	HIGH	18.63
25	3	QPSK	26365	6	LOW	17.64
25	3	QPSK	26365	6	HIGH	17.82
25	3	QPSK	26365	15	LOW	17.69
25	3	Q16	26365	1	LOW	18.02
25	3	Q16	26365	1	MID	18.13
25	3	Q16	26365	1	HIGH	18.19
25	3	Q16	26365	4	LOW	17.91
25	3	Q16	26365	4	HIGH	17.87
25	3	Q16	26365	15	LOW	16.52
25	14	QPSK	26365	1	LOW	18.47
25	14	QPSK	26365	1	MID	18.49
25	14	QPSK	26365	1	HIGH	18.60
25	14	QPSK	26365	3	LOW	18.57
25	14	QPSK	26365	3	HIGH	18.63
25	14	QPSK	26365	6	LOW	17.70
25	14	Q16	26365	1	LOW	17.63
25	14	Q16	26365	1	MID	17.62
25	14	Q16	26365	1	HIGH	17.66
25	14	Q16	26365	5	LOW	17.63
25	14	Q16	26365	5	HIGH	17.63
25	14	Q16	26365	6	LOW	16.34

Table 1.8.9-2 LTE band 25 conducted power measurements at SVLTE lower power

This report shall NOT be reproduced except in full without the written consent of RTS
Copyright 2005-2013, RTS, A division of BlackBerry Limited

1.9 General SAR Test Reduction and Exclusion procedure as per KDB 447498 D01 V05 and SAR Handsets Multi Xmiter and Ant procedure as per 648474 D04 v01

Standalone SAR test exclusion guidance:

The 1-g and 10-g SAR test exclusion thresholds for 100 MHz to 6 GHz at *test separation distances*

$$\left(\frac{\text{max. power of channel, including tune-up tolerance (mW)}}{\text{min. test separation distance (mm)}} \times \sqrt{\frac{f}{(\text{GHz})}}\right) \leq 3.0$$, For 1g SAR

Where:

- $f_{(GHz)}$ is the RF channel transmit frequency in GHz
- Power and distance are rounded to the nearest mW and mm before calculation[17]
- If *distance* is < 5 mm, a distance of 5 mm is applied to determine SAR test exclusion
- The result is rounded to one decimal place for comparison

.

Simultaneous Transmission SAR Test exclusion considerations:

When the sum of 1-g of all simultaneously transmitting antennas in an operating mode and exposure condition combination is within the SAR limit, SAR test exclusion applies to that simultaneous transmission configuration. When the sum is greater than the SAR limit, the SAR to peak location separation ratio procedures described below may be applied to determine if simultaneous transmission SAR test exclusion applies.

The ratio is determined by:

$$\left([SAR1 + SAR2]^{\frac{1.5}{R_i}}\right) \leq 0.04$$

Where:

- R_i = the separation distance between the peak SAR locations for the antenna pair (mm)

Simultaneous Transmission SAR required:

• antenna pairs with SAR to antenna separation ratio > 0.04; test is only required for the configuration that results in the highest SAR in standalone configuration for each wireless mode and exposure condition.

This report shall NOT be reproduced except in full without the written consent of RTS
Copyright 2005-2013, RTS, A division of BlackBerry Limited

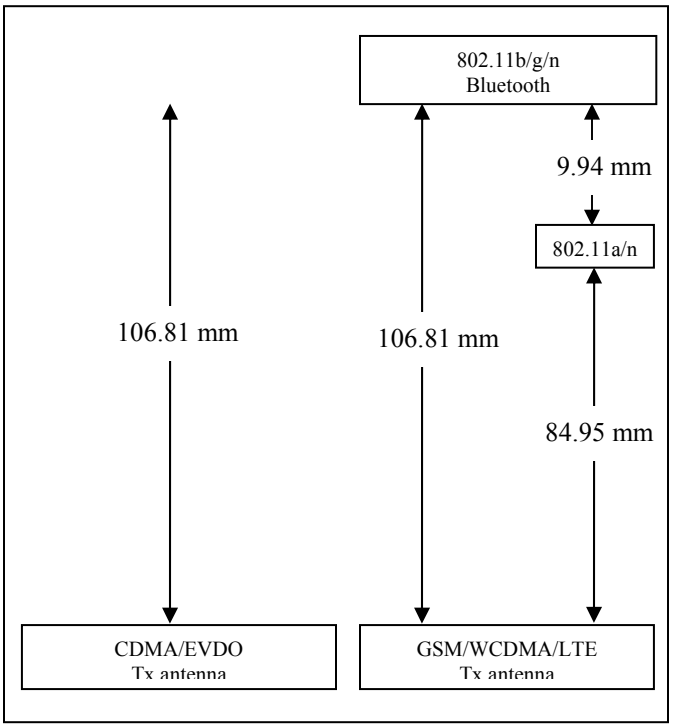

Figure 1.9-1 Back view of device showing closest distance between antenna pairs

1.9.1 Simultaneous Transmission Analysis

Simultaneous Transmission Combination	Head	Body-Worn Accessory	Hotspot
CDMA2000 voice + LTE + WiFi 2.4 GHz/WiFi 5.0 GHz/BT	Yes	Yes	No
WCDMA/GSM/CDMA2000 voice + WiFi 2.4 GHz/WiFi 5.0 GHz/BT	Yes	Yes	No
CDMA2000 data+ LTE + WiFi 2.4 GHz/WiFi 5.0 GHz	Yes	Yes	No
CDMA2000 data+ LTE + BT	Yes	Yes	No
LTE/HSPA/EDGE/GPRS/CDMA2000 data + WiFi 2.4 GHz	Yes	Yes	Yes
LTE/HSPA/EDGE/GPRS/CDMA2000 data + BT	Yes	Yes	No

Table 1.9.1-1 Simultaneous Transmission Scenarios

When Hotspot mode is enabled or active, all 5 GHz WiFi operations are disabled or not supported.

Note 1: BT and WiFi cannot transmit simultaneously since the design doesn't allow it and they use the same antenna.
Note 2: 802.11b and 802.11a cannot transmit simultaneously since the design doesn't allow it and they use the same antenna.
Note 3: LTE and GSM/WCDMA cannot transmit simultaneously since it shares the same antenna.

This report shall NOT be reproduced except in full without the written consent of RTS
Copyright 2005-2013, RTS, A division of BlackBerry Limited

Test	Configuration	Licensed Transmitters		WiFi 2.4/5.0GHz 1g avg. SAR (W/kg)	SVLTE band 25	Max Sum 1g avg. SAR (W/kg)
		Band	1g avg. SAR (W/kg)			
Head SAR	Right Cheek	GSM/DTM/EDGE 850	0.41	0.77	NA	1.18
	Right Cheek	UMTS Band V	0.27	0.77	NA	1.04
	Right Cheek	CDMA 800 BC10	0.32	0.77	0.12	1.21
	Right Cheek	CDMA 850 BC0	0.33	0.77	0.12	1.22
	Right Cheek	LTE Band 25	0.30	0.77	NA	1.07
	Right Cheek	GSM/DTM/EDGE 1900	0.37	0.77	NA	1.14
	Right Cheek	UMTS Band II	0.38	0.77	NA	1.15
	Right Cheek	CDMA 1900 BC1	1.33	0.11	0.12	1.56
	Right Cheek	CDMA 1900 BC1	1.33	0.38	NA	**1.71**
	Right Tilt	GSM/DTM/EDGE 850	0.21	0.90	NA	1.11
	Right Tilt	UMTS Band V	0.18	0.90	NA	1.08
	Right Tilt	CDMA 800 BC10	0.19	0.90	0.06	1.09
	Right Tilt	CDMA 850 BC0	0.21	0.90	0.06	1.17
	Right Tilt	LTE Band 25	0.12	0.90	NA	1.02
	Right Tilt	GSM/DTM/EDGE 1900	0.15	0.90	NA	1.05
	Right Tilt	UMTS Band II	0.36	0.90	NA	1.26
	Right Tilt	CDMA 1900 BC1	0.39	0.13	0.06	0.58
	Right Tilt	CDMA 1900 BC1	0.39	0.46	NA	0.85
	Left Cheek	GSM/DTM/EDGE 850	0.47	0.46	NA	0.93
	Left Cheek	UMTS Band V	0.37	0.46	NA	0.83
	Left Cheek	CDMA 800 BC10	0.29	0.46	0.24	0.99
	Left Cheek	CDMA 850 BC0	0.29	0.46	0.24	0.99
	Left Cheek	LTE Band 25	0.63	0.46	NA	1.09
	Left Cheek	GSM/DTM/EDGE 1900	0.78	0.46	NA	1.24
	Left Cheek	UMTS Band II	1.22	0.46	NA	**1.68**
	Left Cheek	CDMA 1900 BC1	0.73	0.06	0.24	1.03
	Left Cheek	CDMA 1900 BC1	0.73	0.21	NA	0.94
	Left Tilt	GSM/DTM/EDGE 850	0.27	0.51	NA	0.78
	Left Tilt	UMTS Band V	0.21	0.51	NA	0.72
	Left Tilt	CDMA 800 BC10	0.16	0.51	0.06	0.73
	Left Tilt	CDMA 850 BC0	0.15	0.51	0.06	0.72
	Left Tilt	LTE Band 25	0.13	0.51	NA	0.64
	Left Tilt	GSM/DTM/EDGE 1900	0.11	0.51	NA	0.62
	Left Tilt	UMTS Band II	0.28	0.51	NA	0.79
	Left Tilt	CDMA 1900 BC1	0.42	0.07	0.06	0.55
	Left Tilt	CDMA 1900 BC1	0.42	0.24	NA	0.66

Table 1.9.1-2 Highest Head SAR values and summation

Note 1: If sum of 1 g SAR < 1.6 W/kg, Simultaneous SAR measurement is not required.
Note 2: If sum of 1 g SAR > 1.6 W/kg, ratio of SAR to peak separation distance for pair of transmitters calculated.

This report shall NOT be reproduced except in full without the written consent of RTS
Copyright 2005-2013, RTS, A division of BlackBerry Limited

Antenna	Position	SAR Zoom 1g	X [mm]	Y [mm]	Z [mm]	
Antenna 1 (802.11 b/g_CDMA_BC1 mode) 13.5 dBm Tx power	Right Head Touch	0.38	34.2	-334.1	-173.1	
Antenna 2 (CDMA 1900)	Right Head Touch	1.33	62.1	-259.7	-171.4	
	SAR Sum	1.71				
	SAR Sum to the power of 1.5	2.24				
	Delta [mm]		-27.9	-74.4	-1.7	
	closest Distance [mm]					79.48
	Ratio	0.03				

Antenna	Position	SAR Zoom 1g	X [mm]	Y [mm]	Z [mm]	
Antenna 1 (802.11 b)	Left Head Touch	0.46	4.9	297.0	-169.7	
Antenna 2 UMTS band II	Left Head Touch	1.22	64.4	257.2	-170.8	
	SAR Sum	1.68				
	SAR Sum to the power of 1.5	2.18				
	Delta [mm]		-59.5	39.8	1.1	
	closest Distance [mm]					71.62
	Ratio	0.03				

Table 1.9.1-3 Head configuration ratio of SAR to peak separation distance for pair of transmitters

Note: If the ratio of SAR to peak separation distance is ≤ 0.04, Simultaneous SAR measurement is not required.

This report shall NOT be reproduced except in full without the written consent of RTS
Copyright 2005-2013, RTS, A division of BlackBerry Limited

Test	Configuration	Licensed Transmitters		WiFi 2.4/5.0GHz 1g avg. SAR (W/kg)	SVLTE Band 25	Max Sum 1g avg. SAR (W/kg)
		Band	1g avg. SAR (W/kg)			
Body Worn SAR	15mm separation device back	GSM/DTM/EDGE 850	0.70	0.43	NA	1.13
	15mm separation device back	UMTS Band V	0.42	0.43	NA	0.85
	15mm separation device back	CDMA 800 BC10	0.62	0.43	0.12	1.17
	15mm separation device back	CDMA 850 BC0	0.61	0.43	0.12	1.16
	15mm separation device back	LTE Band 25	0.28	0.43	NA	0.71
	15mm separation device back	GSM/DTM/EDGE 1900	0.60	0.43	NA	1.03
	15mm separation device back	UMTS Band II	0.86	0.43	NA	1.29
	15mm separation device back	CDMA 1900 BC1	0.47	0.04	0.12	0.63
	15mm separation device back	CDMA 1900 BC1	0.47	0.16	NA	0.63
	15mm separation device front	GSM/DTM/EDGE 850	0.63	0.07	NA	0.70
	15mm separation device front	UMTS Band V	0.37	0.07	NA	0.44
	15mm separation device front	CDMA 800 BC10	0.45	0.07	0.10	0.62
	15mm separation device front	CDMA 850 BC0	0.47	0.07	0.10	0.64
	15mm separation device front	LTE Band 25	0.24	0.07	NA	0.31
	15mm separation device front	GSM/DTM/EDGE 1900	0.32	0.07	NA	0.39
	15mm separation device front	UMTS Band II	0.48	0.07	NA	0.55
	15mm separation device front	CDMA 1900 BC1	0.70	0.07	0.10	0.87
	15mm separation device front	CDMA 1900 BC1	0.70	0.07	NA	0.77
	Holster device back	GSM/DTM/EDGE 850	0.59	0.65	NA	1.24
	Holster device back	UMTS Band V	0.31	0.65	NA	0.96
	Holster device back	CDMA 800 BC10	0.45	0.65	0.00	1.10
	Holster device back	CDMA 850 BC0	0.44	0.65	0.00	1.09
	Holster device back	LTE Band 25	0.30	0.65	NA	0.95
	Holster device back	GSM/DTM/EDGE 1900	0.27	0.65	NA	0.92
	Holster device back	UMTS Band II	0.39	0.65	NA	1.04
	Holster device back	CDMA 1900 BC1	0.42	0.04	0.00	0.46
	Holster device back	CDMA 1900 BC1	0.42	0.10	NA	0.52

Table 1.9.1-4 Highest Body-worn SAR values for the same configuration

Note 1: If sum of 1 g SAR < 1.6 W/kg, Simultaneous SAR measurement is not required.
Note 2: If sum of 1 g SAR > 1.6 W/kg, ratio of SAR to peak separation distance for pair of transmitters is required.

This report shall NOT be reproduced except in full without the written consent of RTS
Copyright 2005-2013, RTS, A division of BlackBerry Limited

Test	Configuration	Licensed Transmitters		WiFi 2.4GHz 1g avg. SAR (W/kg)	Max Sum 1g avg. SAR (W/kg)
		Band	1g avg. SAR (W/kg)		
Hotspot Mode SAR	10mm separation device back	GSM/DTM/EDGE 850	1.04	0.19	1.23
	10mm separation device back	UMTS Band V	0.61	0.19	0.80
	10mm separation device back	CDMA 800 BC10	0.99	0.19	1.18
	10mm separation device back	CDMA 850 BC0	1.02	0.19	1.21
	10mm separation device back	LTE Band 25	0.85	0.19	1.04
	10mm separation device back	GSM/DTM/EDGE 1900	1.01	0.19	1.20
	10mm separation device back	UMTS Band II	1.34	0.19	1.53
	10mm separation device back	CDMA 1900 BC1	0.85	0.19	1.04
	10mm separation device back	CDMA 1900 BC1	0.85	0.19	1.04
	10mm separation device front	GSM/DTM/EDGE 850	0.80	0.05	0.85
	10mm separation device front	UMTS Band V	0.48	0.05	0.53
	10mm separation device front	CDMA 800 BC10	0.64	0.05	0.69
	10mm separation device front	CDMA 850 BC0	0.71	0.05	0.76
	10mm separation device front	LTE Band 25	0.44	0.05	0.49
	10mm separation device front	GSM/DTM/EDGE 1900	0.62	0.05	0.67
	10mm separation device front	UMTS Band II	0.92	0.05	0.97
	10mm separation device front	CDMA 1900 BC1	1.11	0.05	1.16
	10mm separation device front	CDMA 1900 BC1	1.11	0.05	1.16
	10mm separation device left	GSM/DTM/EDGE 850	0.56	0.03	0.59
	10mm separation device left	UMTS Band V	0.35	0.03	0.38
	10mm separation device left	CDMA 800 BC10	0.30	0.03	0.33
	10mm separation device left	CDMA 850 BC0	0.30	0.03	0.33
	10mm separation device left	LTE Band 25	0.27	0.03	0.30
	10mm separation device left	GSM/DTM/EDGE 1900	0.53	0.03	0.56
	10mm separation device left	UMTS Band II	0.92	0.03	0.95
	10mm separation device left	CDMA 1900 BC1	0.18	0.03	0.21
	10mm separation device left	CDMA 1900 BC1	0.18	0.03	0.21
	10mm separation device right	GSM/DTM/EDGE 850	0.42	0.00	0.42
	10mm separation device right	UMTS Band V	0.29	0.00	0.29
	10mm separation device right	CDMA 800 BC10	0.41	0.00	0.41
	10mm separation device right	CDMA 850 BC0	0.36	0.00	0.36
	10mm separation device right	LTE Band 25	0.10	0.00	0.10
	10mm separation device right	GSM/DTM/EDGE 1900	0.08	0.00	0.08
	10mm separation device right	UMTS Band II	0.12	0.00	0.12
	10mm separation device right	CDMA 1900 BC1	0.87	0.00	0.87
	10mm separation device right	CDMA 1900 BC1	0.87	0.00	0.87
	10mm separation device bottom	GSM/DTM/EDGE 850	0.29	0.00	0.29
	10mm separation device bottom	UMTS Band V	0.18	0.00	0.18
	10mm separation device bottom	CDMA 800 BC10	0.47	0.00	0.47
	10mm separation device bottom	CDMA 850 BC0	0.39	0.00	0.39
	10mm separation device bottom	LTE Band 25	0.10	0.00	0.10
	10mm separation device bottom	GSM/DTM/EDGE 1900	0.21	0.00	0.21
	10mm separation device bottom	UMTS Band II	0.31	0.00	0.31
	10mm separation device bottom	CDMA 1900 BC1	0.41	0.00	0.41
	10mm separation device bottom	CDMA 1900 BC1	0.41	0.00	0.41
	10mm separation device top	UMTS Band V	0.00	0.09	0.09
	10mm separation device top	CDMA 800 BC10	0.00	0.09	0.09
	10mm separation device top	CDMA 850 BC0	0.00	0.09	0.09
	10mm separation device top	LTE Band 25	0.00	0.09	0.09
	10mm separation device top	GSM/DTM/EDGE 1900	0.00	0.09	0.09
	10mm separation device top	UMTS Band II	0.00	0.09	0.09
	10mm separation device top	CDMA 1900 BC1	0.00	0.09	0.09
	10mm separation device top	CDMA 1900 BC1	0.00	0.09	0.09

Table 1.9.1-5 Highest Hotspot SAR values for the same configuration

Note 1: If sum of 1 g SAR < 1.6 W/kg, Simultaneous SAR measurement is not required.
Note 2: If sum of 1 g SAR > 1.6 W/kg, ratio of SAR to peak separation distance for pair of transmitters calculated.

This report shall NOT be reproduced except in full without the written consent of RTS
Copyright 2005-2013, RTS, A division of BlackBerry Limited

1.10 SVLTE Power Reduction Considerations

This device supports Simultaneous Voice and LTE (SVLTE) calls, i.e. voice call is supported by a CDMA 1xRTT transmitter and the data connection supported by a LTE transmitter. Transmitters have separate antenna, match, PA and RF filtering. Dynamic Power Reduction scheme has been implemented on LTE during a SVLTE call with the 1xRTT voice. Power reduction is applicable to LTE mode only and not on CDMA modes during SVLTE calls. LTE power reduction is triggered when CDMA power is >/= 18.5 dBm.

LTE and EvDO cannot transmit simultaneously in cell and PCS bands.

1.10.1 SVLTE Power Reduction, Test Setup Configuration and Conducted Power Measurements

The LTE power reduction was verified by simultaneously connecting the device to both LTE and CDMA base station simulators. LTE power levels were measured through conducted RF connections by first connecting the device to CWM500 LTE data and CDMA 1xRTT to CMU200 base station simulator.

First, CDMA 1xRTT was set to transmit at maximum transmitting power by setting the following parameters on the CMU200; CDMA and LTE power levels were measured and recorded:

- Power Control Bit was set to: All Bits UP
- BS Signal Level-> CDMA Power was set to: -99 dBm
- Analyzer level was set: 24.0 dBm
- RF Mode was set to: Auto

Then, CDMA 1xRTT power level was lowered by step of 1 dB; CDMA and LTE power levels were measured and recorded by setting the following parameters on the CMU200:

- Power Control Bit was set to: Auto
- BS Signal Level-> CDMA Power was set to: -99 dBm
- Analyzer level was lowered from 24.0 dBm to 17.0 dBm by step of 1 dB.
- RF Mode was set to: Manual

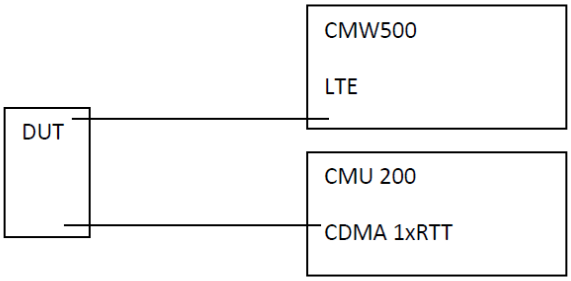

Figure 1.10.1-1 SVLTE Conducted Power Test Setup Diagram

This report shall NOT be reproduced except in full without the written consent of RTS
Copyright 2005-2013, RTS, A division of BlackBerry Limited

Band	SVLTE_LTE Band 25/CDMA 800 BC10						
Frequency (MHz)	Channel	BW	Modulation	RB Size	RB Offset	LTE	CDMA 800
1860	26410	20 MHz	QPSK	1	99	18.4	24.5
			QPSK	1	99	18.7	23.2
			QPSK	1	99	21.4	22.5
			QPSK	1	99	21.3	21.0
			QPSK	1	99	23.3	20.0
			QPSK	1	99	23.3	19.0
			QPSK	1	99	23.3	18.0
			QPSK	1	99	23.2	18.0

Table 1.10.1-1 SVLTE Conducted Power Data for LTE/CDMA 800

Note 1: CMU200 Analyzer level→RF Max Level varied from 18.0dBm to 24.5dBm
Note 2: RF mode was set to Manual, Power control bit was set to Auto
Note 3: BS Signal Level →CDMA Power set to -99dBm

Band	SVLTE_LTE Band 25/CDMA 850 BC0						
Frequency (MHz)	Channel	BW	Modulation	RB Size	RB Offset	LTE	CDMA 850
1860	26410	20 MHz	QPSK	1	99	18.5	24.4
			QPSK	1	99	18.4	23.3
			QPSK	1	99	20.5	22.4
			QPSK	1	99	21.4	21.3
			QPSK	1	99	22.7	20.2
			QPSK	1	99	23.3	19.3
			QPSK	1	99	23.3	18.2
			QPSK	1	99	23.3	17.4

Table 1.10.1-2 SVLTE Conducted Power Data for LTE/CDMA 850

Note 1: CMU200 Analyzer level→RF Max Level varied from 17.4dBm to 24.4dBm
Note 2: RF mode was set to Manual, Power control bit was set to Auto
Note 3: BS Signal Level →CDMA Power set to -99dBm

Band	SVLTE_LTE Band 25/CDMA 1900 BC1						
Frequency (MHz)	Channel	BW	Modulation	RB Size	RB Offset	LTE	CDMA 1900
1860	26410	20 MHz	QPSK	1	99	18.4	24.0
			QPSK	1	99	18.5	23.1
			QPSK	1	99	18.3	22.1
			QPSK	1	99	21.4	21.0
			QPSK	1	99	21.3	20.0
			QPSK	1	99	23.3	19.0
			QPSK	1	99	23.3	18.0
			QPSK	1	99	23.3	17.0

Table 1.10.1-3 SVLTE Conducted Power Data for LTE/CDMA 1900

Note 1: CMU200 Analyzer level→RF Max Level varied from 17.0dBm to 24.0dBm
Note 2: RF mode was set to Manual, Power control bit was set to Auto
Note 3: BS Signal Level →CDMA Power set to -99dBm

This report shall NOT be reproduced except in full without the written consent of RTS
Copyright 2005-2013, RTS, A division of BlackBerry Limited

1.11 Wi-Fi and Hotspot Mode Power Reductions

- There are two fixed Wi-Fi power reductions when transmitting simultaneously with CDMA/SVLTE (data/voice)

    1) WiFi at lower CDMA_BC1 power level.
    2) WiFi at lower SVLTE_BC1_25 power level.

- In addition there is fixed power reduction on Wi-Fi in hotspot mode. Power reduction is triggered when device is set to Hotspot mode.

This report shall NOT be reproduced except in full without the written consent of RTS
Copyright 2005-2013, RTS, A division of BlackBerry Limited

2.0 DESCRIPTION OF THE TEST EQUIPMENT

2.1 SAR measurement system

SAR measurements were performed using a Dosimetric Assessment System (DASY52), an automated SAR measurement system manufactured by Schmid & Partner Engineering AG (SPEAG), of Zurich, Switzerland.

The DASY 52 system for performing compliance tests consists of the following items:

- A standard high precision 6-axis robot (Stäubli RX family) with controller and software.
- An arm extension for accommodating the data acquisition electronics (DAE).
- A dosimetric probe, i.e., an isotropic E-field probe optimized and calibrated for usage in tissue simulating liquid. The probe is equipped with an optical surface detector system.
- A DAE module that performs the signal amplification, signal multiplexing, A/D conversion, offset measurements, mechanical surface detection, collision detection, etc. The unit is battery powered with standard or rechargeable batteries. The signal is optically transmitted to the Electro-optical coupler (EOC).
- A unit to operate the optical surface detector that is connected to the EOC.
- The EOC performs the conversion from an optical signal into the digital electric signal of the DAE. The EOC is connected to the PC plug-in card.
- The functions of the PC plug-in card based on a DSP are to perform the time critical tasks such as signal filtering, surveillance of the robot operation fast movement interrupts.
- A computer operating Windows.
- DASY52 software version 52.8.
- Remote control with teach pendant and additional circuitry for robot safety such as warning lamps, etc.
- The SAM Twin Phantom enabling testing left-hand and right-hand usage.
- The device holder for mobile phones.
- Tissue simulating liquid mixed according to the given recipes (see section 6.1).
- System validation dipoles allowing for the validation of proper functioning of the system.

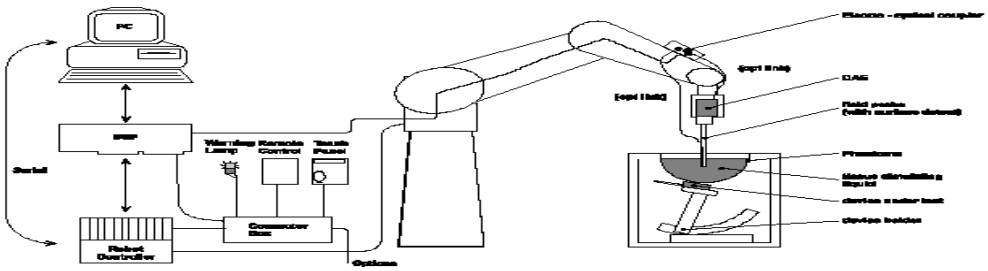

Figure 2.1-1 System Description

This report shall NOT be reproduced except in full without the written consent of RTS
Copyright 2005-2013, RTS, A division of BlackBerry Limited

2.1.1 Equipment List

Manufacturer	Test Equipment	Model Number	Serial Number	Cal. Due Date (MM/DD/YY)
SCHMID & Partner Engineering AG	E-field probe	ES3DV3	3225	01/10/2014
SCHMID & Partner Engineering AG	E-field probe	EX3DV4	3548	01/15/2014
SCHMID & Partner Engineering AG	Data Acquisition Electronics (DAE3)	DAE4 V1	881	01/14/2014
SCHMID & Partner Engineering AG	Dipole Validation Kit	D835V2	446	01/07/2015
SCHMID & Partner Engineering AG	Dipole Validation Kit	D1900V2	545	01/09/2015
SCHMID & Partner Engineering AG	Dipole Validation Kit	D2450V2	747	11/09/2013
SCHMID & Partner Engineering AG	Dipole Validation Kit	D5000V2	1033	11/15/2013
Agilent Technologies	Signal generator	8648C	4037U03155	09/23/2013
Agilent Technologies	Power meter	E4419B	GB40202821	09/23/2013
Agilent Technologies	Power sensor	8481A	MY41095417	09/26/2013
Amplifier Research	Amplifier	5S1G4M3	300986	CNR
Agilent Technologies	Power meter	N1911A	MY45100905	05/29/2015
Agilent Technologies	Power sensor	N1921A	SG45240281	11/19/2013
Agilent Technologies	Power sensor	N1921A	MY45241383	09/11/2013
Weinschel Corp	20dB Attenuator	33-20-34	BMO697	CNR
Agilent Technologies	Power sensor	8481A	MY41095233	09/26/2013
Agilent Technologies	Network analyzer	8753ES	US39174857	09/20/2013
Rohde & Schwarz	Base Station Simulator	CMU 200	109747	11/19/2013
CPI Wireless Solutions	Amplifier	VZC-6961K4	SK4310E5	CNR
Rohde & Schwarz	Signal generator	SMA 100A	102106	12/02/2013
Rohde & Schwarz	Bluetooth Tester	CBT	100368	12/04/2013
Rohde & Schwarz	Bluetooth Tester	CBT	100678	12/04/2013
Rohde & Schwarz	Wideband Base Station Simulator	CMW 500	109949	12/10/2014
Rohde & Schwarz	Wideband Base Station Simulator	CMW 500	101169	12/10/2014

Table 2.1.1-1 Equipment list

This report shall NOT be reproduced except in full without the written consent of RTS
Copyright 2005-2013, RTS, A division of BlackBerry Limited

2.2 Description of the test setup

Before SAR measurements are conducted, the device and the DASY equipment are setup as follows:

2.2.1 Device and base station simulator setup

- Power up the device.
- Turn on the base station simulator and set the radio channel and power to the appropriate values.
- Connect an antenna to the RF IN/OUT of the communication test set and place it close to the device.

2.2.2 DASY setup

- Turn the computer on and log on to Windows.
- Start the DASY software by clicking on the icon located on the Windows desktop.
- Mount the DAE unit and the probe. Turn on the DAE unit.
- Turn the Robot Controller on by turning the main power switch to the horizontal position
- Align the probe by clicking the 'Align probe in light beam' button.
- Open a file and configure the proper parameters - probe, medium, communications system etc.
- Establish a connection between the Device and the communications test instrument. Place the Device on the stand and adjust it under the phantom.
- Start SAR measurements.

3.0 ELECTRIC FIELD PROBE CALIBRATION

3.1 Probe Specifications

SAR measurements were conducted using the dosimetric probes ES3DV3/ET3DV6 and EX3DV4, designed by Schmid & Partner Engineering AG for the measurement of SAR. The probe is constructed using the thin film technique, with printed resistive lines on ceramic substrates. It has a symmetrical design with triangular core, built-in optical fibre for the surface detection system and built-in shielding against static discharge. The probe is sensitive to E-fields and thus incorporates three small dipoles arranged so that the overall response is close to isotropic. The table below summarizes the technical data for the probe.

Property	Data
Frequency range	30 MHz – 3 GHz
Linearity	±0.1 dB
Directivity (rotation around probe axis)	≤ ±0.2 dB
Directivity (rotation normal to probe axis)	±0.4 dB
Dynamic Range	5 mW/kg – 100 W/kg
Probe positioning repeatability	±0.2 mm
Spatial resolution	< 0.125 mm ³
Probe model EX3DV4 for 2.4 – 6 GHz	
Probe tip to sensor center	1.0 mm
Probe tip diameter is	2.5 mm
Probe calibration uncertainty	< 15 % for f = 2.45 to < 6.0 GHz
Probe calibration range	± 100 MHz

Table 3.1-1 Probe specifications

This report shall NOT be reproduced except in full without the written consent of RTS
Copyright 2005-2013, RTS, A division of BlackBerry Limited

3.2 Probe calibration and measurement uncertainty

The probe had been calibrated with accuracy better than ±12% . The sensitivity parameters (NormX, NormY, NormZ), the diode compression parameter (DCP) and the conversion factor (ConvF) of the probe were tested. The probe calibration parameters are shown on Appendix D and below:

Calibration Parameter Determined in Head Tissue Simulating Media

f (MHz) [C]	Relative Permittivity [F]	Conductivity (S/m) [F]	ConvF X	ConvF Y	ConvF Z	Alpha	Depth (mm)	Unct. (k=2)
750	41.9	0.89	6.56	6.56	6.56	0.42	1.54	± 12.0 %
900	41.5	0.97	6.19	6.19	6.19	0.43	1.52	± 12.0 %
1810	40.0	1.40	5.35	5.35	5.35	0.63	1.39	± 12.0 %
1950	40.0	1.40	5.09	5.09	5.09	0.80	1.23	± 12.0 %
2450	39.2	1.80	4.65	4.65	4.65	0.61	1.63	± 12.0 %
2600	39.0	1.96	4.43	4.43	4.43	0.80	1.32	± 12.0 %

Calibration Parameter Determined in Body Tissue Simulating Media

f (MHz) [C]	Relative Permittivity [F]	Conductivity (S/m) [F]	ConvF X	ConvF Y	ConvF Z	Alpha	Depth (mm)	Unct. (k=2)
750	55.5	0.96	6.27	6.27	6.27	0.48	1.51	± 12.0 %
900	55.0	1.05	6.12	6.12	6.12	0.73	1.25	± 12.0 %
1810	53.3	1.52	5.04	5.04	5.04	0.57	1.47	± 12.0 %
1950	53.3	1.52	4.94	4.94	4.94	0.58	1.50	± 12.0 %
2450	52.7	1.95	4.35	4.35	4.35	0.70	1.16	± 12.0 %
2600	52.5	2.16	4.11	4.11	4.11	0.67	0.99	± 12.0 %

Table 3.2-1 Probe ES3DV3 SN: 3225 (cal: 1/10/2013)

This report shall NOT be reproduced except in full without the written consent of RTS
Copyright 2005-2013, RTS, A division of BlackBerry Limited

Calibration Parameter Determined in Head Tissue Simulating Media

f (MHz) [C]	Relative Permittivity [F]	Conductivity (S/m) [F]	ConvF X	ConvF Y	ConvF Z	Alpha	Depth (mm)	Unct. (k=2)
2600	39.0	1.96	7.15	7.15	7.15	0.47	0.86	± 12.0 %
5200	36.0	4.66	5.13	5.13	5.13	0.40	1.80	± 13.1 %
5500	35.6	4.96	4.79	4.79	4.79	0.40	1.80	± 13.1 %
5800	35.3	5.27	4.61	4.61	4.61	0.45	1.80	± 13.1 %

Calibration Parameter Determined in Body Tissue Simulating Media

f (MHz) [C]	Relative Permittivity [F]	Conductivity (S/m) [F]	ConvF X	ConvF Y	ConvF Z	Alpha	Depth (mm)	Unct. (k=2)
2600	52.5	2.16	7.08	7.08	7.08	0.80	0.50	± 12.0 %
5200	49.0	5.30	4.68	4.68	4.68	0.52	1.90	± 13.1 %
5500	48.6	5.65	4.15	4.15	4.15	0.52	1.90	± 13.1 %
5800	48.2	6.00	4.19	4.19	4.19	0.60	1.90	± 13.1 %

Table 3.2-2 Probe EX3DV4 SN: 3548 (cal: 1/15/2013)

C The validity of ± 100 MHz only applies for DASY v4.4 and higher.
DASY 52 has been used for measurements, therefore ± 100 MHz tolerance is valid.
Measured dielectric parameters are within +/- 5% of the probe calibration values and target values.
Expanded probe calibration uncertainty (k=2) is < 15 %

This report shall NOT be reproduced except in full without the written consent of RTS
Copyright 2005-2013, RTS, A division of BlackBerry Limited

4.0 SAR MEASUREMENT SYSTEM VERIFICATION

Prior to conducting SAR measurements, the system was validated using the dipole validation kit and the flat section of the SAM phantom. A power level of 1.0W was applied to the dipole antenna. The verification results are in the table below with a comparison to reference values. Printouts are shown in Appendix A. All the measured parameters are within the allowed tolerances.

At above 1.5 – 2 GHz, dipoles maintain good return loss of -15 dB to -20 dB, therefore SAR measurements are limited to approximately +/- 100 MHz of the probe/dipole calibration frequency.

4.1 System accuracy verification for head adjacent use

f (MHz)	Limits / Measured (MM/DD/YYYY)	Scan Type	SAR 1g/10g (W/kg)	Dielectric Parameters		Liquid Temp. (°C)
				ε_r	σ [S/m]	
835	Measured (06/24/2013)	Area Scan/Fast SAR	8.68 / 5.76	41.4	0.89	22.8
	Measured (06/24/2013)	Zoom Scan	8.68 / 5.68	41.4	0.89	22.8
	Measured (06/26/2013)	Area Scan/Fast SAR	8.66 / 5.73	40.7	0.88	22.7
	Measured (06/26/2013)	Zoom Scan	8.59 / 5.62	40.7	0.88	22.7
	Measured (07/13/2013)	Area Scan/Fast SAR	9.09/6.03	41.6	0.90	23.0
	Measured (07/13/2013)	Zoom Scan	9.06/5.94	41.6	0.90	23.0
	Measured (07/16/2013)	Area Scan/Fast SAR	9.08/6.03	40.6	0.88	23.1
	Measured (07/16/2013)	Zoom Scan	8.80/5.76	40.6	0.88	23.1
	Measured (08/16/2013)	Area Scan/Fast SAR	8.70/5.76	40.4	0.88	21.5
	Measured (08/16/2013)	Zoom Scan	8.61/5.64	40.4	0.88	21.5
	Recommended Limits (Dipole: 446)		9.39 / 6.13	41.5	0.90	N/A
1900	Measured (06/20/2013)	Area Scan/Fast SAR	38.6/20.2	38.7	1.41	22.5
	Measured (06/20/2013)	Zoom Scan	38.0/20.0	38.7	1.41	22.5
	Measured (06/24/2013)	Area Scan/Fast SAR	37.5/19.7	39.0	1.40	22.2
	Measured (06/24/2013)	Zoom Scan	36.6/19.3	39.0	1.40	22.2
	Measured (06/28/2013)	Area Scan/Fast SAR	36.9/19.5	39.3	1.38	23.0
	Measured (06/28/2013)	Zoom Scan	36.4/19.2	39.3	1.38	23.0
	Measured (07/02/2013)	Area Scan/Fast SAR	37.6/19.8	38.4	1.39	21.6
	Measured (07/02/2013)	Zoom Scan	37.0/19.5	38.4	1.39	21.6
	Measured (07/05/2013)	Area Scan/Fast SAR	36.7/19.4	38.7	1.41	21.7
	Measured (07/05/2013)	Zoom Scan	36.2/19.1	38.7	1.41	21.7
	Measured (07/08/2013)	Area Scan/Fast SAR	37.3/19.6	38.5	1.38	22.5
	Measured (07/08/2013)	Zoom Scan	36.6/19.2	38.5	1.38	22.5
	Measured (08/07/2013)	Area Scan/Fast SAR	38.7/20.5	38.2	1.38	22.2
	Measured (08/07/2013)	Zoom Scan	38.0/19.9	38.2	1.38	22.2
	Measured (08/15/2013)	Area Scan/Fast SAR	37.6/19.8	38.4	1.38	23.0
	Measured (08/15/2013)	Zoom Scan	36.7/19.3	38.4	1.38	23.0
	Recommended Limits (Dipole: 545)		40.2/21.1	40.0	1.40	N/A

This report shall NOT be reproduced except in full without the written consent of RTS
Copyright 2005-2013, RTS, A division of BlackBerry Limited

2450	Measured (06/17/2013)	Area Scan/Fast SAR	50.3/22.1	39.4	1.76	22.5
	Measured (06/17/2013)	Zoom Scan	49.8/23.8	39.4	1.76	22.5
	Measured (07/19/2013)	Area Scan/Fast SAR	52.5/23.2	37.8	1.82	22.8
	Measured (07/19/2013)	Zoom Scan	52.1/24.6	37.8	1.82	22.8
	Measured (07/23/2013)	Area Scan/Fast SAR	51.7/22.8	37.9	1.85	22.4
	Measured (07/23/2013)	Zoom Scan	51.6/24.3	37.9	1.85	22.4
	Measured (08/06/2013)	Area Scan/Fast SAR	51.8/22.9	37.5	1.86	22.6
	Measured (08/06/2013)	Zoom Scan	50.8/24.0	37.5	1.86	22.6
	Recommended Limits (Dipole: 747)		54.1/25.3	39.2	1.80	N/A
5200	Measured (06/18/2013)	Area Scan/Fast SAR	75.6 / 21.2	34.5	4.65	22.2
	Measured (06/18/2013)	Zoom Scan	80.2 / 23.3	34.5	4.65	22.2
	Measured (07/22/2013)	Area Scan/Fast SAR	77.3/21.6	35.2	4.63	21.4
	Measured (07/22/2013)	Zoom Scan	83.1/24.1	35.2	4.63	21.4
	Measured (08/08/2013)	Area Scan/Fast SAR	79.2/22.0	34.3	4.58	21.8
	Measured (08/08/2013)	Zoom Scan	83.4/24.3	34.3	4.58	21.8
	Measured (08/12/2013)	Area Scan/Fast SAR	74.4/20.6	34.4	4.67	22.8
	Measured (08/12/2013)	Zoom Scan	78.1/22.7	34.4	4.67	22.8
	Recommended Limits (Dipole: 1033)		80.8 / 23.0	36.0	4.66	N/A
5500	Measured (06/18/2013)	Area Scan/Fast SAR	77.6 / 21.3	34.1	4.92	22.2
	Measured (06/18/2013)	Zoom Scan	81.8 / 23.4	34.1	4.92	22.2
	Measured (07/22/2013)	Area Scan/Fast SAR	83.2/22.9	34.5	5.01	21.4
	Measured (07/22/2013)	Zoom Scan	90.0/25.7	34.5	5.01	21.4
	Measured (08/08/2013)	Area Scan/Fast SAR	88.7/24.1	34.2	5.00	21.8
	Measured (08/08/2013)	Zoom Scan	93.2/26.7	34.2	5.00	21.8
	Measured (08/12/2013)	Area Scan/Fast SAR	80.9/21.9	34.8	5.00	22.8
	Measured (08/12/2013)	Zoom Scan	85.1/24.3	34.8	5.00	22.8
	Recommended Limits (Dipole: 1033)		87.3 / 24.7	35.6	4.96	N/A
5800	Measured (06/18/2013)	Area Scan/Fast SAR	77.5 / 21.4	33.8	5.33	22.2
	Measured (06/18/2013)	Zoom Scan	82.1 / 23.5	33.8	5.33	22.2
	Measured (07/22/2013)	Area Scan/Fast SAR	78.1/21.6	33.9	5.32	21.4
	Measured (07/22/2013)	Zoom Scan	84.5/24.3	33.9	5.32	21.4
	Measured (08/08/2013)	Area Scan/Fast SAR	79.6/21.7	33.5	5.29	21.8
	Measured (08/08/2013)	Zoom Scan	83.7/24.0	33.5	5.29	21.8
	Measured (08/12/2013)	Area Scan/Fast SAR	81.9/22.2	33.9	5.28	22.8
	Measured (08/12/2013)	Zoom Scan	86.0/24.6	33.9	5.28	22.8
	Recommended Limits (Dipole: 1033)		79.4 / 22.5	35.3	5.27	N/A

Table 4.1-1 System accuracy (validation for head adjacent use)

This report shall NOT be reproduced except in full without the written consent of RTS
Copyright 2005-2013, RTS, A division of BlackBerry Limited

5.0 PHANTOM DESCRIPTION

The SAM Twin Phantom, manufactured by SPEAG, was used during the SAR measurements. The phantom is made of a fibreglass shell integrated with a wooden table.

The SAM Twin Phantom is a fibreglass shell phantom with 2 mm shell thickness. It has three measurement areas:

Left side head
Right side head
Flat phantom

The phantom table dimensions are: 100x50x85 cm (LxWxH). The table is intended for use with freestanding robots.

The bottom shelf contains three pair of bolts for locking the device holder in place. The device holder positions are adjusted to the standard measurement positions in the three sections. Only one device holder is
necessary if two phantoms are used (e.g., for different solutions).

A white cover is provided to top the phantom during off-periods to prevent water evaporation and changes in the liquid parameters. Free space scans of devices on the cover are possible; however the optical surface detector does not work properly at the cover surface. Place a sheet of white paper on the cover when using optical surface detection.

Liquid depth of ≥ 15 cm is maintained in the phantom for all the measurements.

Figure 5.0-1 SAM Twin Phantom

This report shall NOT be reproduced except in full without the written consent of RTS
Copyright 2005-2013, RTS, A division of BlackBerry Limited

6.0 TISSUE DIELECTRIC PROPERTIES

6.1 Composition of tissue simulant

The composition of the brain and muscle simulating liquids are shown in the table below.

INGREDIENT	MIXTURE 800–900MHz		MIXTURE 1800–1900MHz		MIXTURE 2450 MHz		MIXTURE 5 – 6 GHz	
	Brain %	Muscle %	Brain %	Muscle %	Brain %	Muscle %	Brain %	Muscle %
Water	40.29	65.45	55.24	69.91	55.0	68.75	64	64-78
Sugar	57.90	34.31	0	0	0	0	0	0
Salt	1.38	0.62	0.31	0.13	0	0	0	0
HEC	0.24	0	0	0	0	0	0	0
Bactericide	0.18	0.10	0	0	0	0	0	0
DGBE	0	0	44.45	29.96	40.0	31.25	0	0
Triton X-100	0	0	0	0	5.0	0	0	0
Additives and Salt	0	0	0	0	0	0	3	2-3
Emulsifiers	0	0	0	0	0	0	15	9-15
Mineral Oil	0	0	0	0	0	0	18	11-18

Table 6.1-1 Tissue simulant recipe

6.1.1 Equipment

Manufacturer	Test Equipment	Model Number	Serial Number	Cal. Due Date (MM/DD/YY)
Pyrex, England	Graduated Cylinder	N/A	N/A	N/A
Pyrex, USA	Beaker	N/A	N/A	N/A
Acculab	Weight Scale	V1-1200	018WB2003	N/A
IKA Works Inc.	Hot Plate	RC Basic	3.107433	N/A
Dell	PC using GPIB card	GX110	347	N/A
Agilent Technologies	Dielectric probe kit	HP 85070C	US9936135	CNR
Agilent Technologies	Network Analyzer	8753ES	US39174857	09/20/2013
Control Company	Digital Thermometer	23609-234	21352860	09/26/2013

Table 6.1.1-1 Tissue simulant preparation equipment

This report shall NOT be reproduced except in full without the written consent of RTS
Copyright 2005-2013, RTS, A division of BlackBerry Limited

6.1.2 Preparation procedure

800-900 MHz liquids

- Fill the container with **water**. Begin heating and stirring.
- Add the **Cellulose,** the **preservative substance** and the **salt**. After several hours, the liquid will become more transparent again. The container must be covered to prevent evaporation.
- Add **Sugar**. Stir it well until the sugar is sufficiently dissolved.
- Keep the liquid hot but below the boiling point for at least an hour. The container must be covered to prevent evaporation.
- Remove the container from, and turn the hotplate off and allow the liquid to cool off to room temperature prior to performing dielectric measurements.

1800-2450 MHz liquid

- Fill the container with water and place it on hotplate. Begin heating and stirring.
- Add the salt, Glycol/Triton X-100. The container must be covered to prevent evaporation.
- Keep the liquid hot enough to dissolve sugar for at least an hour. The container must be covered to prevent evaporation.
- Remove the container from, and turn the hotplate off and allow the liquid to cool off to room temperature prior to performing dielectric measurements.

6.2 Electrical parameters of the tissue simulating liquid

The tissue dielectric parameters shall be measured before a batch can be used for SAR measurements to ensure that the simulated tissue was properly made and will simulate the desired human characteristic. Limits and measured electrical parameters are shown in the table below.
Recommended limits are adopted from IEEE P1528-2003:
" Recommended Practice for Determining the Peak Spatial-Average Specific Absorption Rate (SAR) in the Human Head from Wireless Communications Devices: Measurement Techniques", DASY manual and from FCC Tissue Dielectric Properties web page at http://www.fcc.gov/fcc-bin/dielec.sh

Band (MHz)	Tissue Type	Limits / Measured (MM/DD/YYYY)	f (MHz)	Dielectric Parameters		Liquid Temp (°C)
				ε_r	σ [S/m]	
835	Head	Measured (06/24/2013)	815	41.7	0.87	22.8
			825	41.5	0.88	
			835	41.4	0.89	
			850	41.2	0.90	
		Measured (06/26/2013)	815	40.9	0.86	22.7
			825	40.8	0.87	
			835	40.7	0.88	
			850	40.5	0.89	
		Measured (07/13/2013)	815	41.8	0.88	23.0
			825	41.7	0.89	
			835	41.6	0.90	
			850	41.4	0.91	
		Measured (07/16/2013)	815	40.8	0.86	23.1
			825	40.7	0.87	
			835	40.6	0.88	
			850	40.4	0.89	

This report shall NOT be reproduced except in full without the written consent of RTS
Copyright 2005-2013, RTS, A division of BlackBerry Limited

		Measured (08/16/2013)	815	40.7	0.86	21.5
			825	40.5	0.87	
			835	40.4	0.88	
			850	40.2	0.90	
		Recommended Limits	835	41.5	0.90	N/A
	Muscle	Measured (06/24/2013)	815	53.0	0.93	22.8
			825	52.9	0.94	
			835	52.8	0.95	
			850	52.7	0.97	
		Measured (06/26/2013)	815	53.3	0.94	22.7
			825	53.2	0.95	
			835	53.1	0.96	
			850	53.0	0.98	
		Measured (07/13/2013)	815	53.4	0.95	23.0
			825	53.4	0.96	
			835	53.3	0.97	
			850	53.1	0.98	
		Measured (07/16/2013)	815	53.9	0.93	23.1
			825	53.9	0.94	
			835	53.8	0.96	
			850	53.8	0.97	
		Measured (08/16/2013)	815	54.3	0.94	21.5
			825	54.2	0.95	
			835	54.0	0.96	
			850	53.9	0.98	
		Recommended Limits	835	55.2	0.97	N/A
1900	Head	Measured (06/20/2013)	1850	38.8	1.36	22.5
			1900	38.7	1.41	
			1910	38.6	1.42	
			1980	38.3	1.50	
		Measured (06/24/2013)	1850	39.2	1.35	22.2
			1900	39.0	1.40	
			1910	39.0	1.41	
			1980	38.8	1.48	
		Measured (06/28/2013)	1850	39.5	1.34	23.0
			1900	39.3	1.38	
			1910	39.3	1.39	
			1980	39.1	1.47	
		Measured (07/02/2013)	1850	38.5	1.34	21.6
			1900	38.4	1.39	
			1910	38.4	1.40	
			1980	38.1	1.47	
		Measured (07/05/2013)	1850	38.9	1.36	21.7
			1900	38.7	1.41	
			1910	38.6	1.42	
			1980	38.3	1.49	
		Measured (07/08/2013)	1850	38.7	1.33	22.5
			1900	38.5	1.38	

This report shall NOT be reproduced except in full without the written consent of RTS
Copyright 2005-2013, RTS, A division of BlackBerry Limited

			1910	38.5	1.39	
			1980	38.2	1.46	
		Measured (08/07/2013)	1850	38.4	1.33	22.2
			1900	38.2	1.38	
			1910	38.2	1.42	
		Measured (08/15/2013)	1850	38.6	1.33	23.0
			1900	38.4	1.38	
			1910	38.3	1.39	
			1980	38.0	1.47	
		Recommended Limits	1900	40.0	1.40	N/A
	Muscle	Measured (06/20/2013)	1850	51.6	1.53	21.9
			1900	51.5	1.58	
			1910	51.4	1.59	
		Measured (06/24/2013)	1850	51.6	1.50	22.2
			1900	51.4	1.55	
			1910	51.5	1.56	
		Measured (06/28/2013)	1850	51.3	1.49	23.0
			1900	51.2	1.53	
			1910	51.2	1.54	
		Measured (07/02/2013)	1850	50.7	1.50	21.6
			1900	50.7	1.55	
			1910	50.7	1.56	
		Measured (07/05/2013)	1850	51.3	1.52	21.7
			1900	51.0	1.58	
			1910	51.0	1.59	
		Measured (07/08/2013)	1850	51.1	1.49	22.5
			1900	50.9	1.55	
			1910	50.8	1.56	
		Measured (08/07/2013)	1850	51.0	1.50	22.2
			1900	50.8	1.55	
			1910	50.8	1.56	
		Measured (08/15/2013)	1850	51.0	1.50	23.0
			1900	50.9	1.55	
			1910	50.9	1.57	
		Recommended Limits	1900	53.3	1.52	N/A
2450	Head	Measured (06/17/2013)	2410	39.5	1.72	22.5
			2450	39.4	1.76	
			2480	39.3	1.79	
		Measured (07/17/2013)	2410	37.9	1.79	22.8
			2450	37.8	1.83	
			2480	37.7	1.86	
		Measured (07/23/2013)	2410	38.0	1.80	22.4
			2450	37.9	1.85	
			2480	37.8	1.88	
		Measured (08/06/2013)	2410	37.6	1.83	22.6
			2450	37.5	1.86	
			2480	37.3	1.88	
		Recommended Limits	2450	39.2	1.80	N/A

This report shall NOT be reproduced except in full without the written consent of RTS
Copyright 2005-2013, RTS, A division of BlackBerry Limited

	Muscle	Measured (06/17/2013)	2410	50.3	1.86	22.5
			2450	50.2	1.90	
			2480	50.1	1.94	
		Measured (07/17/2013)	2410	50.9	1.96	22.8
			2450	50.8	2.01	
			2480	50.6	2.05	
		Measured (07/23/2013)	2410	51.3	2.00	22.1
			2450	51.0	2.04	
			2480	50.9	2.09	
		Measured (08/06/2013)	2410	50.8	1.92	22.6
			2450	50.6	1.97	
			2480	50.6	2.00	
		Recommended Limits	2450	52.7	1.95	N/A
5200	Head	Measured (06/18/2013)	5180	34.5	4.63	22.2
			5200	34.5	2.65	
			5280	34.3	4.74	
		Measured (06/18/2013)	5180	35.2	4.62	21.4
			5200	35.2	4.63	
			5280	35.1	4.76	
		Measured (08/08/2013)	5180	34.3	4.58	21.8
			5200	34.3	4.58	
			5280	34.2	4.72	
		Measured (08/12/2013)	5180	34.4	4.65	22.8
			5200	34.4	4.67	
			5280	34.2	4.76	
		Recommended Limits	5200	36.0	4.66	N/A
	Muscle	Measured (06/18/2013)	5180	51.1	5.48	22.2
			5200	51.0	5.49	
			5280	50.4	5.59	
		Measured (07/22/2013)	5180	49.9	5.43	23.2
			5200	49.8	5.46	
			5280	49.6	5.64	
		Measured (08/08/2013)	5180	49.9	5.41	21.8
			5200	49.9	5.42	
			5280	49.7	5.61	
		Measured (08/12/2013)	5180	48.7	5.37	22.8
			5200	48.6	5.41	
			5280	48.5	5.57	
		Recommended Limits	5200	49.0	5.30	N/A
5500	Head	Measured (06/18/2013)	5500	34.1	4.92	22.2
			5620	34.0	5.05	
		Measured (07/22/2013)	5500	34.5	5.01	21.4
			5620	34.5	5.13	
		Measured (08/08/2013)	5500	34.2	5.00	21.8
			5620	34.1	5.12	
		Measured (08/12/2013)	5500	34.8	5.00	22.8
			5620	34.6	5.15	
		Recommended Limits	5500	35.6	4.96	N/A

This report shall NOT be reproduced except in full without the written consent of RTS
Copyright 2005-2013, RTS, A division of BlackBerry Limited

	Muscle	Measured (06/19/2013)	5500	47.4	5.41	22.2
			5620	46.4	5.51	
		Measured (07/22/2013)	5500	48.9	5.87	23.2
			5620	48.7	6.03	
		Measured (08/08/2013)	5500	49.3	5.92	21.8
			5620	49.3	6.09	
		Measured (08/12/2013)	5500	47.8	5.78	22.8
			5620	47.6	5.95	
		Recommended Limits	5500	48.6	5.65	N/A
5800	Head	Measured (06/18/2013)	5745	34.0	5.27	22.2
			5800	33.8	5.33	
		Measured (07/22/2013)	5745	34.3	5.30	21.4
			5800	33.9	5.32	
		Measured (08/08/2013)	5745	34.1	5.30	21.8
			5800	33.5	5.29	
		Measured (08/12/2013)	5745	34.2	5.22	22.8
			5800	33.9	5.28	
		Recommended Limits	5800	35.3	5.27	N/A
	Muscle	Measured (06/19/2013)	5745	49.9	6.22	22.2
			5800	49.6	6.28	
		Measured (07/22/2013)	5500	48.4	6.25	23.2
			5620	48.3	6.34	
		Measured (08/08/2013)	5745	48.2	6.16	21.8
			5800	48.0	6.24	
		Measured (08/12/2013)	5745	45.9	5.91	22.8
			5800	46.0	5.99	
		Recommended Limits	5800	48.2	6.00	N/A

Table 6.2-1 Electrical parameters of tissue simulating liquid

This report shall NOT be reproduced except in full without the written consent of RTS
Copyright 2005-2013, RTS, A division of BlackBerry Limited

6.2.2 Test Configuration

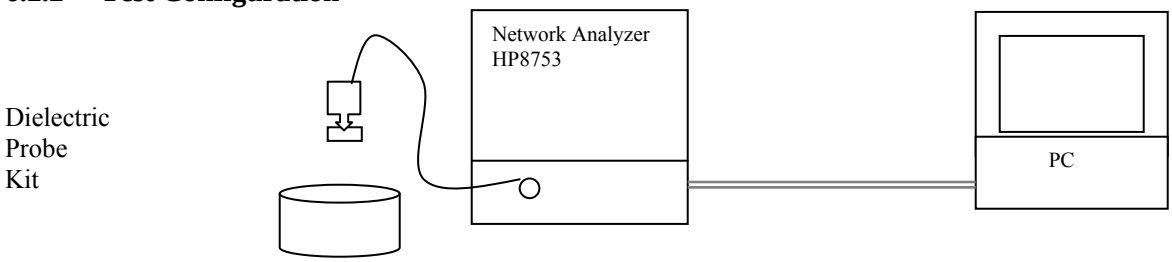

Figure 6.2.2-1 Test configuration

6.2.3 Procedure

1. Turn NWA on and allow at least 30 minutes for warm up.
2. Mount dielectric probe kit so that interconnecting cable to NWA will not be moved during measurements or calibration.
3. Pour de-ionized water and measure water temperature (±1°).
4. Set water temperature in HP-Software (Calibration Setup).
5. Perform calibration.
6. Relative permittivity $\varepsilon r = \varepsilon'$ and conductivity can be calculated from ε'' ($\sigma = \omega\, \varepsilon_0\, \varepsilon''$)
7. Measure liquid shortly after calibration.
8. Stir the liquid to be measured. Take a sample (~50ml) with a syringe from the center of the liquid container.
9. Pour the liquid into a small glass flask. Hold the syringe at the bottom of the flask to avoid air bubbles.
10. Put the dielectric probe in the glass flask. Check that there are no air bubbles in front of the opening in the dielectric probe kit.
11. Perform measurements.
12. Adjust medium parameters in DASY software for the frequencies necessary for the measurements (‘Setup Config’, select medium (e.g. Head 835 MHz) and press ‘Option’-button.
13. Select the current medium for the frequency of the validation (e.g. Setup Medium Brain 835 MHz).

This report shall NOT be reproduced except in full without the written consent of RTS
Copyright 2005-2013, RTS, A division of BlackBerry Limited

7.0 SAR SAFETY LIMITS

Standards/Guideline	Localized SAR Limit (W/kg) General public (uncontrolled)	Localized SAR Limits (W/kg) Workers (controlled)
ICNIRP Standard	2.0 (10g)	10.0 (10g)
IEEE C95.1 Standard	1.6 (1g)	8.0 (1g)

Table 7.0-1 SAR safety limits for Controlled / Uncontrolled environment

Human Exposure	Localized SAR Limits (W/kg) 10g, ICNIRP Standard	Localized SAR Limits (W/kg) 1g, IEEE C95.1 Standard
Spatial Average (averaged over the whole body)	0.08	0.08
Spatial Peak (averaged over any X g of tissue)	2.00	1.60
Spatial Peak (hands/wrists/feet/ankles averaged over 10 g)	4.00	4.00 (10g)

Table 7.0-2 SAR safety limits

Uncontrolled Environments are defined as locations where there is exposure of individuals who have no knowledge or control of their exposure.

Controlled Environments are defined as locations where there is exposure that may be incurred by persons who are aware of the potential for exposure, (i.e. as a result of employment or occupation).

This report shall NOT be reproduced except in full without the written consent of RTS
Copyright 2005-2013, RTS, A division of BlackBerry Limited

8.0 DEVICE POSITIONING

8.1 Device holder for SAM Twin Phantom

The Device was positioned for all test configurations using the DASY5 holder. The device holder facilitates the rotation of the mounted transmitter in spherical coordinates whereby the rotation point is the ear opening. The devices can be easily, accurately and with repeatability positioned according to FCC and CENELEC specifications. The device holder can be locked at different phantom locations (left head, right head, flat phantom).

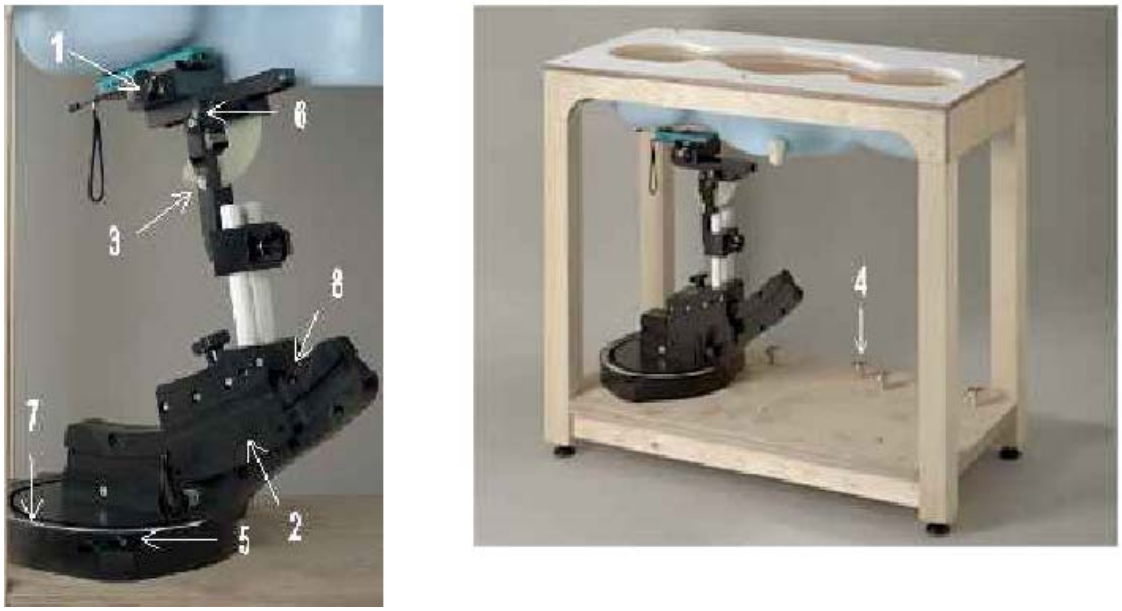

Figure 8.1-1 Device Holder

1. Put the phone in the clamp mechanism (1) and hold it straight while tightening. (Curved phones or phones with asymmetrical ear pieces should be positioned so that the earpiece is in the symmetry plane of the clamp).
2. Adjust the sliding carriage (2) to 90°. Then adjust the phone holder angle (3) until the reference line of the phone is horizontal (parallel to the flat phantom bottom). The phone reference line is defined as the front tangential line between the earpiece and the center of the device bottom (or the center of the flip hinge). For devices with parallel front and backsides, the phone holder angle (3) is 0°.
3. Place the device holder at the desired phantom section and move it securely against the positioning pins (4). The screw in front of the turning plate can be applied for correct positioning (5). (Do not tighten it too strongly).
4. Shift the phone clamp (6) so that the earpiece is exactly below the ear marking of the phantom. The phone is now correctly positioned in the holder for all standard phantom measurements, even after changing the phantom or phantom section.
5. Adjust the device position angles to the desired measurement position.
6. After fixing the device angles, move the phone fixture up until the phone touches the ear marking. (The point of contact depends on the design of the device and the positioning angle).

This report shall NOT be reproduced except in full without the written consent of RTS
Copyright 2005-2013, RTS, A division of BlackBerry Limited

8.2 Description of the test positioning

8.2.1 Test Positions of Device Relative to Head

The handset was tested in two test positions against the head phantom, the "cheek" position and the "tilted" position, on both left and right sides of the phantom.

The handset was tested in the above positions according to IEEE 1528- 2003 "Recommended Practice for Determining the Spatial-Peak Specific Absorption Rate (SAR) in the Human Body Due to Wireless Communications Devices: Experimental Techniques".

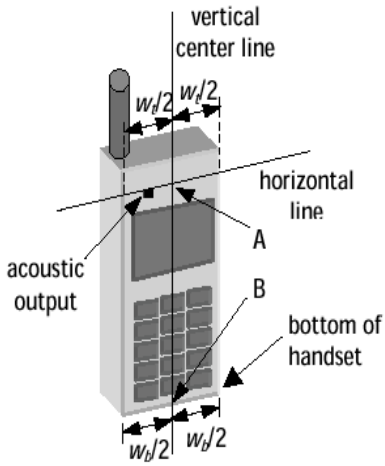

Figure 8.2.1-1 Handset vertical and horizontal reference lines – fixed case

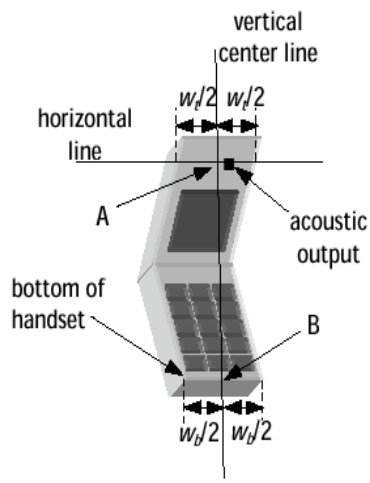

Figure 8.2.1-2 Handset vertical and horizontal reference lines – "clam-shell"

This report shall NOT be reproduced except in full without the written consent of RTS
Copyright 2005-2013, RTS, A division of BlackBerry Limited

Definition of the "cheek" position

1) Ready the handset for talk operation, if necessary. For example, for handsets with a cover piece, open the cover.
2) Define two imaginary lines on the handset: the vertical centerline and the horizontal line. The vertical centerline passes through two points on the front side of the handset: the midpoint of the width *wt* of the handset at the level of the acoustic output (point A on Figures 8.2.1-1 and 8.2.1-2), and the midpoint of the width *wb* of the bottom of the handset (point B). The horizontal line is perpendicular to the vertical centerline and passes through the center of the acoustic output (see Figure 8.2.1-1). The two lines intersect at point A. Note that for many handsets, point A coincides with the center of the acoustic output. However, the acoustic output may be located elsewhere on the horizontal line. Also note that the vertical centerline is not necessarily parallel to the front face of the handset (see Figure 8.2.1-2), especially for clamshell handsets, handsets with flip pieces, and other irregularly shaped handsets.
3) Position the handset close to the surface of the phantom such that point A is on the (virtual) extension of the line passing through points RE and LE on the phantom (see Figure 8.2.1-3), such that the plane defined by the vertical center line and the horizontal center line is in a plane approximately parallel to the sagittal plane of the phantom.
4) Translate the handset towards the phantom along the line passing through RE and LE until the handset touches the ear.
5) While maintaining the handset in this plane, rotate it around the LE-RE line until the vertical centerline is the plane normal to MB ("*mouth-bac*k") - NF ("*neck-front*") including the line MB (reference plane).
6) Rotate the phone around the vertical centerline until the phone (horizontal line) is symmetrical with respect to the line NF.
7) While maintaining the vertical centerline in the reference plane, keeping point A on the line passing through RE and LE, and maintaining the phone contact with the ear, rotate the handset about the line NF until any point on the handset is in contact with a phantom point below the ear (cheek).

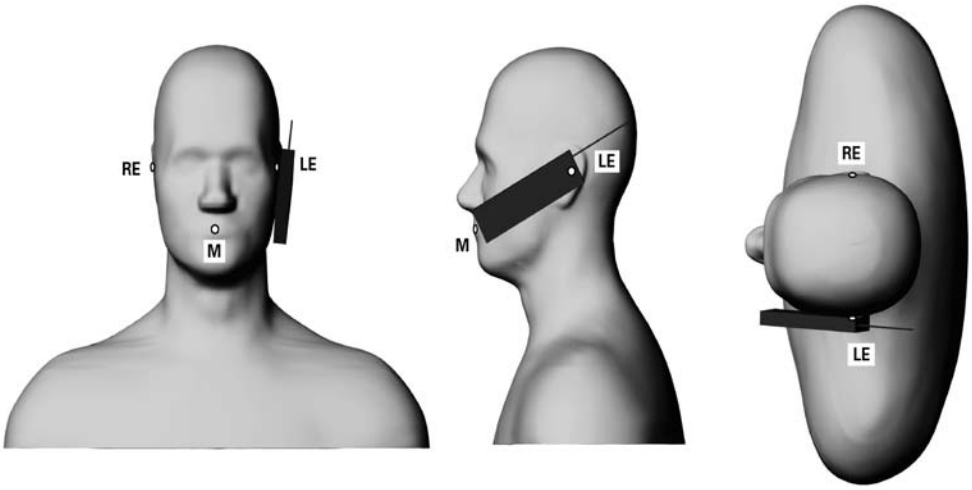

Figure 8.2.1-3 Phone position 1, "cheek" or "touch" position. The reference points for the right ear (RE), left ear (LE) and mouth (M), which define the reference plane for phone positioning, are indicated. The shoulders are shown for illustration purposes only.

This report shall NOT be reproduced except in full without the written consent of RTS
Copyright 2005-2013, RTS, A division of BlackBerry Limited

Definition of the "Tilted" Position

1) Repeat steps 1 to 7 from above.
2) While maintaining the device in the reference plane (described above) and pivoting against the ear, move the device outward away from the mouth by an angle of 15 degrees, or until the antenna touches the phantom**.**

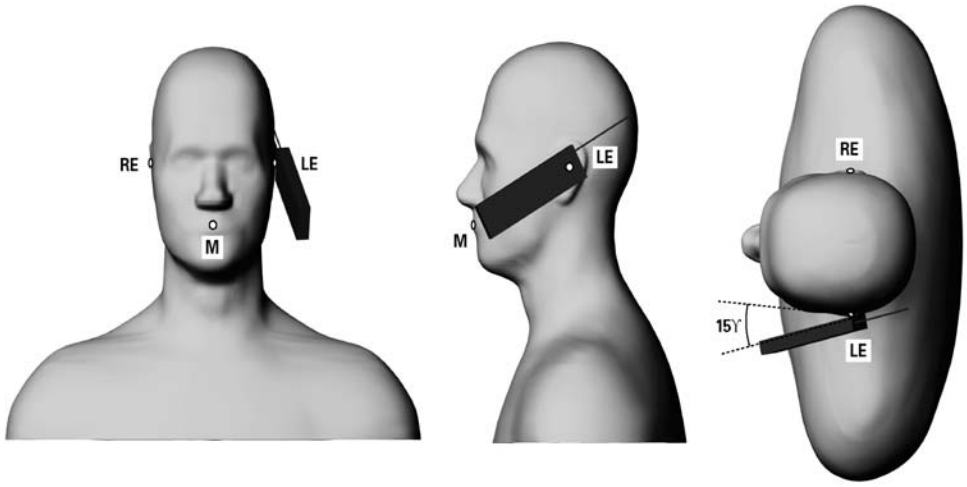

Figure 8.2.1-4 Phone position 2, "tilted position." The reference points for the right ear (RE), left ear (LE) and mouth (M), which define the reference plane for phone positioning, are indicated. The shoulders are shown for illustration purposes only.

8.2.2 Body-worn Configuration

Body-worn holsters, as shown on Figure 1.4-1, have been test with the device for RF exposure compliance. The device was positioned in each holster case and the belt clip was placed against the flat section of the phantom. A headset was then connected to the device to simulate hands-free operation in a body worn holster configuration.

In addition, device was tested with 15 mm RIM recommended separation distance to allow typical after-market holster to be used. RIM body-worn holsters with belt-clip have been designed to maintain ~ 19-20 mm separation distance from body.

8.2.3 Limb/Hand Configuration

BlackBerry device is not a limb-worn device and hasn't been tested for such a configuration.

As per Clause 6.1.4.9 in the IEC/EN 62209-2 standard:

"Additional studies remain needed for devising a representative method for evaluating SAR in the hand of hand-held devices. Future versions of this standard are intended to contain a test method based on scientific data and rationale. Annex J presents the currently available test procedure."

This report shall NOT be reproduced except in full without the written consent of RTS
Copyright 2005-2013, RTS, A division of BlackBerry Limited

Clause J.2 of the IEC/EN 62209-2 states that testing for compliance for the exposure of the hand is not applicable for devices that are intended to being hand-held to enable use at the ear (see EN 62209-1) or worn on the body when transmitting.

In addition, BlackBerry device is not intended to be held in hand at a distance of larger than 200 mm from the head and body during normal use.

9.0 HIGH LEVEL EVALUATION

9.1 Maximum search

The maximum search is automatically performed after each coarse scan measurement. It is based on splines in two or three dimensions. The procedure can find the maximum for most SAR distributions even with relatively large grid spacing. After the coarse scan measurement, the probe is automatically moved to a position at the interpolated maximum. The following scan can directly use this position for reference, e.g., for a finer resolution grid or the cube evaluations.

9.2 Extrapolation

The extrapolation can be used in z-axis scans with automatic surface detection. The SAR values can be extrapolated to the inner phantom surface. The extrapolation distance is the sum of the probe sensor offset, the surface detection distance and the grid offset. The extrapolation is based on fourth order polynomial functions. The extrapolation is only available for SAR values.

9.3 Boundary correction

The correction of the probe boundary effect in the vicinity of the phantom surface is done in the standard (worst case) evaluation; the boundary effect is reduced by different weights for the lowest measured points in the extrapolation routine. The result is a slight overestimation of the extrapolated SAR values (2% to 8%) depending on the SAR distribution and gradient. The advanced evaluation makes a full compensation of the boundary effect before doing the extrapolation. This is only possible for probes with specifications on the boundary effect.

9.4 Peak search for 1g and 10g cube averaged SAR

The 1g and 10g peak evaluations are only available for the predefined cube 5x5x7 / 7x7x9 scan. The routines are verified and optimized for the grid dimensions used in these cube measurements.
The measured volume of 30x30x30mm / 22x22x22 with 7.5 / 5 / 4.0 mm resolution in (x,y) and 5mm / 2.mm resolution in z axis amounts to 175 / 693 measurement points. The first procedure is an extrapolation (incl. Boundary correction) to get the points between the lowest measured plane and the surface. The next step uses 3D interpolation to get all points within the measured volume in a 1mm grid. In the last step, a 1g cube is placed numerically into the volume and its averaged SAR is calculated. This cube is then moved around until the highest averaged SAR is found. This last procedure is repeated for a 10 g cube. If the highest SAR is found at the edge of the measured volume, the system will issue a warning: higher SAR values might be found outside of the measured volume. In that case the cube measurement can be repeated, using the new interpolated maximum as the center.

This report shall NOT be reproduced except in full without the written consent of RTS
Copyright 2005-2013, RTS, A division of BlackBerry Limited

10.0 MEASUREMENT UNCERTAINTY

DASY5 Uncertainty Budget
According to IEEE 1528/2003 [1]

Error Description	Uncert. value	Prob. Dist.	Div.	(c_i) 1g	(c_i) 10g	Std. Unc. (1g)	Std. Unc. (10g)	(v_i) v_{eff}
Measurement System								
Probe Calibration	±5.5 %	N	1	1	1	±5.5 %	±5.5 %	∞
Axial Isotropy	±4.7 %	R	$\sqrt{3}$	0.7	0.7	±1.9 %	±1.9 %	∞
Hemispherical Isotropy	±9.6 %	R	$\sqrt{3}$	0.7	0.7	±3.9 %	±3.9 %	∞
Boundary Effects	±1.0 %	R	$\sqrt{3}$	1	1	±0.6 %	±0.6 %	∞
Linearity	±4.7 %	R	$\sqrt{3}$	1	1	±2.7 %	±2.7 %	∞
System Detection Limits	±1.0 %	R	$\sqrt{3}$	1	1	±0.6 %	±0.6 %	∞
Readout Electronics	±0.3 %	N	1	1	1	±0.3 %	±0.3 %	∞
Response Time	±0.8 %	R	$\sqrt{3}$	1	1	±0.5 %	±0.5 %	∞
Integration Time	±2.6 %	R	$\sqrt{3}$	1	1	±1.5 %	±1.5 %	∞
RF Ambient Noise	±3.0 %	R	$\sqrt{3}$	1	1	±1.7 %	±1.7 %	∞
RF Ambient Reflections	±3.0 %	R	$\sqrt{3}$	1	1	±1.7 %	±1.7 %	∞
Probe Positioner	±0.4 %	R	$\sqrt{3}$	1	1	±0.2 %	±0.2 %	∞
Probe Positioning	±2.9 %	R	$\sqrt{3}$	1	1	±1.7 %	±1.7 %	∞
Max. SAR Eval.	±1.0 %	R	$\sqrt{3}$	1	1	±0.6 %	±0.6 %	∞
Test Sample Related								
Device Positioning	±2.9 %	N	1	1	1	±2.9 %	±2.9 %	145
Device Holder	±3.6 %	N	1	1	1	±3.6 %	±3.6 %	5
Power Drift	±5.0 %	R	$\sqrt{3}$	1	1	±2.9 %	±2.9 %	∞
Phantom and Setup								
Phantom Uncertainty	±4.0 %	R	$\sqrt{3}$	1	1	±2.3 %	±2.3 %	∞
Liquid Conductivity (target)	±5.0 %	R	$\sqrt{3}$	0.64	0.43	±1.8 %	±1.2 %	∞
Liquid Conductivity (meas.)	±2.5 %	N	1	0.64	0.43	±1.6 %	±1.1 %	∞
Liquid Permittivity (target)	±5.0 %	R	$\sqrt{3}$	0.6	0.49	±1.7 %	±1.4 %	∞
Liquid Permittivity (meas.)	±2.5 %	N	1	0.6	0.49	±1.5 %	±1.2 %	∞
Combined Std. Uncertainty						±10.7 %	±10.5 %	387
Expanded STD Uncertainty						**±21.4 %**	**±21.0 %**	

Table 10.0-1 Worst-Case uncertainty budget for DASY5 assessed according to IEEE P1528.
Source: Schmid & Partner Engineering AG.

[1] The budget is valid for the frequency range 300MHz - 3 GHz and represents a worst-case analysis. For specific tests and configurations, the uncertainty could be considerably smaller.

This report shall NOT be reproduced except in full without the written consent of RTS
Copyright 2005-2013, RTS, A division of BlackBerry Limited

Relative DASY5 Uncertainty Budget for Fast SAR Tests

According to IEEE 1528/2011 and IEC 62209-1/2011
(0.3 - 3 GHz range)

Error Description	Uncert. value	Prob. Dist.	Div.	(c_i) 1g	(c_i) 10g	Std. Unc. (1g)	Std. Unc. (10g)	(v_i) v_{eff}
Measurement System								
Probe Calibration	±6.0 %	N	1	0	0			
Axial Isotropy	±4.7 %	R	$\sqrt{3}$	0.7	0.7	±1.9 %	±1.9 %	∞
Hemispherical Isotropy	±9.6 %	R	$\sqrt{3}$	0.7	0.7	±3.9 %	±3.9 %	∞
Boundary Effects	±1.0 %	R	$\sqrt{3}$	1	1	±0.6 %	±0.6 %	∞
Linearity	±4.7 %	R	$\sqrt{3}$	1	1	±2.7 %	±2.7 %	∞
System Detection Limits	±1.0 %	R	$\sqrt{3}$	1	1	±0.6 %	±0.6 %	∞
Modulation Response	±2.4 %	R	$\sqrt{3}$	1	1	±1.4 %	±1.4 %	∞
Readout Electronics	±0.3 %	N	1	0	0			
Response Time	±0.8 %	R	$\sqrt{3}$	0	0			
Integration Time	±2.6 %	R	$\sqrt{3}$	1	1	±1.5 %	±1.5 %	∞
RF Ambient Noise	±3.0 %	R	$\sqrt{3}$	1	1	±1.7 %	±1.7 %	∞
RF Ambient Reflections	±3.0 %	R	$\sqrt{3}$	0	0			
Probe Positioner	±0.4 %	R	$\sqrt{3}$	1	1	±0.2 %	±0.2 %	∞
Probe Positioning	±2.9 %	R	$\sqrt{3}$	1	1	±1.7 %	±1.7 %	∞
Spatial x-y-Resolution	±10.0 %	R	$\sqrt{3}$	1	1	±5.8 %	±5.8 %	∞
Fast SAR z-Approximation	±7.0 %	R	$\sqrt{3}$	1	1	±4.0 %	±4.0 %	∞
Test Sample Related								
Device Positioning	±2.9 %	N	1	1	1	±2.9 %	±2.9 %	145
Device Holder	±3.6 %	N	1	1	1	±3.6 %	±3.6 %	5
Power Drift	±5.0 %	R	$\sqrt{3}$	1	1	±2.9 %	±2.9 %	∞
Power Scaling	±0 %	R	$\sqrt{3}$	0	0			
Phantom and Setup								
Phantom Uncertainty	±6.1 %	R	$\sqrt{3}$	1	1	±3.5 %	±3.5 %	∞
SAR correction	±1.9 %	R	$\sqrt{3}$	0	0			
Liquid Conductivity (mea.)	±2.5 %	R	$\sqrt{3}$	0	0			
Liquid Permittivity (mea.)	±2.5 %	R	$\sqrt{3}$	0	0			
Temp. unc. - Conductivity	±3.4 %	R	$\sqrt{3}$	0	0			
Temp. unc. - Permittivity	±0.4 %	R	$\sqrt{3}$	0	0			
Combined Std. Uncertainty						±11.4 %	±11.4 %	748
Expanded STD Uncertainty						**±22.7 %**	**±22.7 %**	

Table 10.0-2 Worst-Case uncertainty budget for DASY5 assessed according to IEEE P1528/2011 and IEC 62209-1/2011
Source: Schmid & Partner Engineering AG.

This report shall NOT be reproduced except in full without the written consent of RTS
Copyright 2005-2013, RTS, A division of BlackBerry Limited

DASY5 Uncertainty Budget
for the 3 - 6 GHz range

Error Description	Uncert. value	Prob. Dist.	Div.	(c_i) 1g	(c_i) 10g	Std. Unc. (1g)	Std. Unc. (10g)	(v_i) v_{eff}
Measurement System								
Probe Calibration	±6.55 %	N	1	1	1	±6.55 %	±6.55 %	∞
Axial Isotropy	±4.7 %	R	$\sqrt{3}$	0.7	0.7	±1.9 %	±1.9 %	∞
Hemispherical Isotropy	±9.6 %	R	$\sqrt{3}$	0.7	0.7	±3.9 %	±3.9 %	∞
Boundary Effects	±2.0 %	R	$\sqrt{3}$	1	1	±1.2 %	±1.2 %	∞
Linearity	±4.7 %	R	$\sqrt{3}$	1	1	±2.7 %	±2.7 %	∞
System Detection Limits	±1.0 %	R	$\sqrt{3}$	1	1	±0.6 %	±0.6 %	∞
Readout Electronics	±0.3 %	N	1	1	1	±0.3 %	±0.3 %	∞
Response Time	±0.8 %	R	$\sqrt{3}$	1	1	±0.5 %	±0.5 %	∞
Integration Time	±2.6 %	R	$\sqrt{3}$	1	1	±1.5 %	±1.5 %	∞
RF Ambient Noise	±3.0 %	R	$\sqrt{3}$	1	1	±1.7 %	±1.7 %	∞
RF Ambient Reflections	±3.0 %	R	$\sqrt{3}$	1	1	±1.7 %	±1.7 %	∞
Probe Positioner	±0.8 %	R	$\sqrt{3}$	1	1	±0.5 %	±0.5 %	∞
Probe Positioning	±9.9 %	R	$\sqrt{3}$	1	1	±5.7 %	±5.7 %	∞
Max. SAR Eval.	±4.0 %	R	$\sqrt{3}$	1	1	±2.3 %	±2.3 %	∞
Test Sample Related								
Device Positioning	±2.9 %	N	1	1	1	±2.9 %	±2.9 %	145
Device Holder	±3.6 %	N	1	1	1	±3.6 %	±3.6 %	5
Power Drift	±5.0 %	R	$\sqrt{3}$	1	1	±2.9 %	±2.9 %	∞
Phantom and Setup								
Phantom Uncertainty	±4.0 %	R	$\sqrt{3}$	1	1	±2.3 %	±2.3 %	∞
Liquid Conductivity (target)	±5.0 %	R	$\sqrt{3}$	0.64	0.43	±1.8 %	±1.2 %	∞
Liquid Conductivity (meas.)	±2.5 %	N	1	0.64	0.43	±1.6 %	±1.1 %	∞
Liquid Permittivity (target)	±5.0 %	R	$\sqrt{3}$	0.6	0.49	±1.7 %	±1.4 %	∞
Liquid Permittivity (meas.)	±2.5 %	N	1	0.6	0.49	±1.5 %	±1.2 %	∞
Combined Std. Uncertainty						±12.8 %	±12.6 %	330
Expanded STD Uncertainty						**±25.6 %**	**±25.2 %**	

Table 10.0-3 Worst-Case uncertainty budget for DASY52 assessed according to IEEE P1528.
Source: Schmid & Partner Engineering AG.

This report shall NOT be reproduced except in full without the written consent of RTS
Copyright 2005-2013, RTS, A division of BlackBerry Limited

11.0 TEST RESULTS

11.1 SAR Measurement results at highest power measured against the head

Measured/Extrapolated SAR Values - Head - GSM/EDGE/DTM 850 MHz								
Channel	Freq. (MHz)	Time Slots	Position	Cond. Output Power (dBm)		Power Drift (dB)	1g SAR (W/Kg)	
				Declared	Measured		Measured	Extrapolated
128	824.2	1	Right Cheek					0.00
190	836.6	1	Right Cheek	32.5	32.1	0.15	0.31	0.34
251	848.8	1	Right Cheek					0.00
190	836.6	2	Right Cheek	30.0	29.7	0.18	0.36	0.39
190	836.6	3	Right Cheek	29.0	29.0	-0.05	0.41	0.41
190	836.6	2	Right 15° Tilt	30.0	29.7	-0.04	0.20	0.21
128	824.2	1	Left Cheek					0.00
190	836.6	1	Left Cheek	32.5	32.1	0.06	0.36	0.39
251	848.8	1	Left Cheek					0.00
190	836.6	2	Left Cheek	30.0	29.7	-0.05	0.41	0.44
190	836.6	3	Left Cheek	29.0	29.0	-0.10	0.47	0.47
190	836.6	4	Left Cheek	27.0	26.8	-0.18	0.42	0.44
190	836.6	3	Left 15° Tilt	29.0	29.0	-0.05	0.27	0.27

Table 11.1-1a SAR results for GSM/EDGE/DTM 850 head configuration tested on RFX101LW

Note 1: SAR data was taken on model RFX101LW due to the same WiFi/BT design, PCB, and Cellular/WiFi/BT antennas as RGB141LW. Please refer to the hardware similarity document for more details.

Note 2: For all common bands between RFX101LW and RGB141LW, SAR was only spot checked on RGB141LW due to different antenna tuning on GSM/EDGE/GPRS/UMTS/LTE modes/bands. Please refer to the hardware similarity document for more details.

Note 3: If the power drift is ≤ – 0.200 dB, the extrapolated SAR is calculated using the formula:

Extrapolated SAR = (Measured SAR) * 10^(|Power Drift (dB)| / 10)

Note 4: Only Middle channel was tested when 1g Average SAR <0.8 W/Kg or 3dB lower than the limit.

Measured/Extrapolated SAR Values - Head - GSM/EDGE/DTM 850 MHz								
Channel	Freq. (MHz)	Time Slots	Position	Cond. Output Power (dBm)		Power Drift (dB)	1g SAR (W/Kg)	
				Declared	Measured		Measured	Extrapolated
128	824.2	3	Right Cheek					0.00
190	836.6	3	Right Cheek	29.0	29.0	-0.13	0.35	0.35
251	848.8	3	Right Cheek					0.00
190	836.6	3	Right 15° Tilt					0.00
128	824.2	3	Left Cheek					0.00
190	836.6	3	Left Cheek	29.0	29.0	0.02	0.35	0.35
251	848.8	3	Left Cheek					0.00
190	836.6	3	Left 15° Tilt					0.00

Table 11.1-1b SAR results for GSM/EDGE/DTM 850 head configuration tested on RGB141LW

This report shall NOT be reproduced except in full without the written consent of RTS
Copyright 2005-2013, RTS, A division of BlackBerry Limited

Measured/Extrapolated SAR Values - Head - WCDMA FDD V 850 MHz							
Channel	Freq. (MHz)	Position	Cond. Output Power (dBm)		Power Drift (dB)	1g SAR (W/Kg)	
			Declared	Measured		Measured	Extrapolated
4132	826.4	Right Cheek					0.00
4182	836.4	Right Cheek	23.5	23.1	-0.13	0.25	0.27
4233	846.6	Right Cheek					0.00
4182	836.4	Right 15° Tilt	23.5	23.1	-0.03	0.16	0.18
4132	826.4	Left Cheek					0.00
4182	836.4	Left Cheek	23.5	23.1	0.11	0.34	0.37
4233	846.6	Left Cheek					0.00
4182	836.4	Left 15° Tilt	23.5	23.1	0.04	0.19	0.21

Table 11.1-2a SAR results for WCDMA FDD V head configuration tested on RFX101LW

Measured/Extrapolated SAR Values - Head - WCDMA FDD V 850 MHz							
Channel	Freq. (MHz)	Position	Cond. Output Power (dBm)		Power Drift (dB)	1g SAR (W/Kg)	
			Declared	Measured		Measured	Extrapolated
4132	826.4	Right Cheek					0.00
4182	836.4	Right Cheek	23.5	23.1	0.07	0.09	0.10
4233	846.6	Right Cheek					0.00
4182	836.4	Right 15° Tilt					0.00
4132	826.4	Left Cheek					0.00
4182	836.4	Left Cheek	23.5	23.1	-0.18	0.11	0.12
4233	846.6	Left Cheek					0.00
4182	836.4	Left 15° Tilt					0.00

Table 11.1-2b SAR results for WCDMA FDD V head configuration tested on RGB141LW

Measured/Extrapolated SAR Values - Head - CDMA 800 MHz BC10							
Channel	Freq. (MHz)	Position	Cond. Output Power (dBm)		Power Drift (dB)	1g SAR (W/Kg)	
			Declared	Measured		Measured	Extrapolated
4132	826.4	Right Cheek					0.00
4182	836.4	Right Cheek	24.5	24.3	0.09	0.31	0.32
4233	846.6	Right Cheek					0.00
4182	836.4	Right 15° Tilt	24.5	24.3	0.25	0.18	0.19
4132	826.4	Left Cheek					0.00
4182	836.4	Left Cheek	24.5	24.3	0.13	0.28	0.29
4233	846.6	Left Cheek					0.00
4182	836.4	Left 15° Tilt	24.5	24.3	-0.04	0.15	0.16

Table 11.1-3 SAR results for CDMA 800 BC10 head configuration tested on RGB141LW

This report shall NOT be reproduced except in full without the written consent of RTS
Copyright 2005-2013, RTS, A division of BlackBerry Limited

Measured/Extrapolated SAR Values - Head - CDMA 850 MHz BC0							
Channel	Freq. (MHz)	Position	Cond. Output Power (dBm)		Power Drift (dB)	1g SAR (W/Kg)	
			Declared	Measured		Measured	Extrapolated
4132	826.4	Right Cheek					0.00
4182	836.4	Right Cheek	24.5	24.1	-0.11	0.30	0.33
4233	846.6	Right Cheek					0.00
4182	836.4	Right 15° Tilt	24.5	24.1	-0.01	0.19	0.21
4132	826.4	Left Cheek					0.00
4182	836.4	Left Cheek	24.5	24.1	0.07	0.26	0.29
4233	846.6	Left Cheek					0.00
4182	836.4	Left 15° Tilt	24.5	24.1	0.05	0.14	0.15

Table 11.1-4 SAR results for CDMA 850 BC0 head configuration tested on RGB141LW

Measured/Extrapolated SAR Values - Head - SVLTE Band 25 1900 MHz										
Channel	Freq. (MHz)	Mod.	RB #	RB Offset	Position	Cond. Output Power (dBm)		Power Drift (dB)	1g SAR (W/Kg)	
						Declared	Measured		Measured	Extrapolated
26140	1860.0	QPSK	1	99	Right Cheek					0.00
26365	1882.5	QPSK	1	50	Right Cheek	19.0	18.8	-0.15	0.11	0.12
26590	1905.0	QPSK	1	50	Right Cheek					0.00
26365	1882.5	QPSK	50	50	Right Cheek	18.0	17.8	0.15	0.09	0.09
26365	1882.5	QPSK	100	0	Right Cheek	18.0	17.7	0.02	0.11	0.12
26365	1882.5	QPSK	1	50	Right 15° Tilt	19.0	18.8	0.03	0.06	0.06
26140	1860.0	QPSK	1	99	Left Cheek					0.00
26365	1882.5	QPSK	1	50	Left Cheek	19.0	18.8	-0.13	0.23	0.24
26590	1905.0	QPSK	1	50	Left Cheek					0.00
26365	1882.5	QPSK	50	50	Left Cheek	18.0	17.8	0.14	0.23	0.24
26365	1882.5	QPSK	100	0	Left Cheek	18.0	17.7	0.15	0.20	0.21
26365	1882.5	QPSK	50	50	Left 15° Tilt	18.0	17.8	-0.17	0.06	0.06

Table 11.1-5 SAR results for SVLTE band 25 (20MHz BW) head configuration tested on RGB141LW

Note 1: If the power drift is ≤ – 0.200 dB, the extrapolated SAR is calculated using the formula:

Extrapolated SAR = (Measured SAR) * 10^(|Power Drift (dB)| / 10)

Note 2: Only Middle channel was tested when 1g Average SAR <0.8 W/Kg or 3dB lower than the limit.

Note 3: Only required to test the configuration (channel and offset) yielding the highest conducted power for RB 1 and RB 50% when combined 1g avg. SAR <0.8 W/Kg or 3dB lower than the limit for both cases. Also, when the highest conducted power for RB 1 and RB 50% are both greater than RB 100%, then SAR testing for RB 100% can be excluded.

Note 4: If 1g avg. SAR >0.8 W/Kg or not at least 3dB lower than the limit, than the remaining channels for that RB number must be tested and one additional scan must be done with RB 100%. For all additional scans the highest conducted power configuration (channel and offset) must be used.

Note 5: For LTE if SAR > 1.45, then SAR tests for the smaller bandwidths are required

Note 6: Tested only the highest bandwidth since conducted power on other bandwidths is about the same.

Note 7: Did not test 16 QAM as conducted power was lower than QPSK.

This report shall NOT be reproduced except in full without the written consent of RTS
Copyright 2005-2013, RTS, A division of BlackBerry Limited

Measured/Extrapolated SAR Values - Head - LTE Band 25 1900 MHz										
Channel	Freq. (MHz)	Mod.	RB #	RB Offset	Position	Cond. Output Power (dBm)		Power Drift (dB)	1g SAR (W/Kg)	
						Declared	Measured		Measured	Extrapolated
26140	1860.0	QPSK	1	99	Right Cheek	23.5	23.2	0.04	0.28	0.30
26365	1882.5	QPSK	1	50	Right Cheek					0.00
26590	1905.0	QPSK	1	50	Right Cheek					0.00
26140	1860.0	QPSK	50	50	Right Cheek	22.5	22.2	0.35	0.20	0.21
26365	1882.5	QPSK	100	0	Right Cheek	22.5	22.1	0.22	0.25	0.27
26140	1860.0	QPSK	1	99	Right 15° Tilt	23.5	23.2	-0.10	0.11	0.12
26140	1860.0	QPSK	1	99	Left Cheek	23.5	23.2	0.01	0.59	0.63
26365	1882.5	QPSK	1	50	Left Cheek					0.00
26590	1905.0	QPSK	1	50	Left Cheek					0.00
26140	1860.0	QPSK	50	50	Left Cheek	22.5	22.2	-0.01	0.57	0.61
26365	1882.5	QPSK	100	0	Left Cheek	22.5	22.1	0.14	0.51	0.56
26140	1860.0	QPSK	1	99	Left 15° Tilt	22.5	23.2	-0.04	0.15	0.13

Table 11.1-6 SAR results for LTE band 25 (20MHz BW) head configuration tested on RGB141LW

Measured/Extrapolated SAR Values - Head - GSM/EDGE/DTM 1900 MHz								
Channel	Freq. (MHz)	Time Slots	Position	Cond. Output Power (dBm)		Power Drift (dB)	1g SAR (W/Kg)	
				Declared	Measured		Measured	Extrapolated
512	1850.2	1	Right Cheek					0.00
661	1880.0	1	Right Cheek	29.0	28.9	0.03	0.14	0.14
810	1909.8	1	Right Cheek					0.00
661	1880.0	2	Right Cheek	28.5	28.1	-0.01	0.24	0.26
661	1880.0	2	Right 15° Tilt	28.5	28.1	0.00	0.14	0.15
512	1850.2	1	Left Cheek					0.00
661	1880.0	1	Left Cheek	29.0	28.9	0.09	0.30	0.31
810	1909.8	1	Left Cheek					0.00
661	1880.0	2	Left Cheek	28.5	28.1	-0.26	0.41	0.45
661	1880.0	3	Left Cheek	26.0	25.6	-0.04	0.34	0.37
661	1880.0	4	Left Cheek	25.5	25.3	0.04	0.39	0.41
661	1880.0	2	Left 15° Tilt	28.5	28.1	0.10	0.10	0.11

Table 11.1-7a SAR results for GSM/EDGE/DTM 1900 head configuration tested on RFX101LW

This report shall NOT be reproduced except in full without the written consent of RTS
Copyright 2005-2013, RTS, A division of BlackBerry Limited

Measured/Extrapolated SAR Values - Head - GSM/EDGE/DTM 1900 MHz								
Channel	Freq. (MHz)	Time Slots	Position	Cond. Output Power (dBm)		Power Drift (dB)	1g SAR (W/Kg)	
				Declared	Measured		Measured	Extrapolated
512	1850.2	2	Right Cheek					0.00
661	1880.0	2	Right Cheek	28.5	28.1	-0.04	0.34	0.37
810	1909.8	2	Right Cheek					0.00
661	1880.0	2	Right 15° Tilt					0.00
512	1850.2	2	Left Cheek					0.00
661	1880.0	2	Left Cheek	28.5	28.1	0.09	0.71	0.78
810	1909.8	2	Left Cheek					0.00
661	1880.0	2	Left 15° Tilt					0.00

Table 11.1-7b SAR results for GSM/EDGE/DTM 1900 head configuration tested on RGB141LW

Measured/Extrapolated SAR Values - Head - WCDMA FDD II 1900 MHz							
Channel	Freq. (MHz)	Position	Cond. Output Power (dBm)		Power Drift (dB)	1g SAR (W/Kg)	
			Declared	Measured		Measured	Extrapolated
9262	1852.4	Right Cheek					0.00
9400	1880.0	Right Cheek	23.5	23.0	-0.06	0.34	0.38
9538	1907.6	Right Cheek					0.00
9400	1880.0	Right 15° Tilt	23.5	23.0	-0.08	0.32	0.36
9262	1852.4	Left Cheek	23.5	23.0	0.06	0.97	1.09
9400	1880.0	Left Cheek	23.5	23.0	0.08	1.09	1.22
9400	1880.0	Left Cheek*	23.5	23.0	0.12	1.03	1.16
9538	1907.6	Left Cheek	23.5	23.0	-0.01	0.95	1.07
9400	1880.0	Left 15° Tilt	23.5	23.0	-0.08	0.25	0.28

*2nd Scan

Table 11.1-8a SAR results for WCDMA FDD II head configuration tested on RFX101LW

Measured/Extrapolated SAR Values - Head - WCDMA FDD II 1900 MHz							
Channel	Freq. (MHz)	Position	Cond. Output Power (dBm)		Power Drift (dB)	1g SAR (W/Kg)	
			Declared	Measured		Measured	Extrapolated
9262	1852.4	Right Cheek					0.00
9400	1880.0	Right Cheek	23.5	23.0	-0.18	0.34	0.38
9538	1907.6	Right Cheek					0.00
9400	1880.0	Right 15° Tilt					0.00
9262	1852.4	Left Cheek					0.00
9400	1880.0	Left Cheek	23.5	23.0	-0.06	0.70	0.79
9538	1907.6	Left Cheek					0.00
9400	1880.0	Left 15° Tilt					0.00

Table 11.1-8b SAR results for WCDMA FDD II head configuration tested on RGB141LW

This report shall NOT be reproduced except in full without the written consent of RTS
Copyright 2005-2013, RTS, A division of BlackBerry Limited

Measured/Extrapolated SAR Values - Head - CDMA 1900 MHz BC1							
Channel	Freq. (MHz)	Position	Cond. Output Power (dBm)		Power Drift (dB)	1g SAR (W/Kg)	
			Declared	Measured		Measured	Extrapolated
25	1851.25	Right Cheek	24.0	24.0	0.02	1.11	1.11
600	1880.00	Right Cheek	24.0	24.0	0.07	1.27	1.27
600	1880.00	Right Cheek*	24.0	24.0	0.03	**1.33**	**1.33**
1175	1908.50	Right Cheek	24.0	23.9	-0.10	1.17	1.20
600	1880.00	Right 15° Tilt	24.0	24.0	0.06	0.39	0.39
25	1851.25	Left Cheek	24.0	24.0	0.07	0.58	0.58
600	1880.00	Left Cheek	24.0	24.0	0.07	0.73	0.73
1175	1908.50	Left Cheek	24.0	23.9	-0.09	0.63	0.64
600	1880.00	Left 15° Tilt	24.0	24.0	0.03	0.42	0.42

*2nd Scan

Table 11.1-9 SAR results for CDMA 1900 BC1 head configuration tested on RGB141LW

Measured/Extrapolated SAR Values - Head - 802.11b/g 2450 MHz Full Power							
Channel	Freq. (MHz)	Position	Cond. Output Power (dBm)		Power Drift (dB)	1g SAR (W/Kg)	
			Declared	Measured		Measured	Extrapolated
1	2412.0	Right Cheek	16.5	16.3	0.02	0.67	0.70
6	2437.0	Right Cheek	16.5	16.4	0.37	0.75	0.77
11 (b)	2462.0	Right Cheek	16.5	15.5	0.09	0.48	0.60
1	2412.0	Right 15° Tilt	16.5	16.3	0.00	0.81	0.85
6	2437.0	Right 15° Tilt	16.5	16.4	0.03	0.88	0.90
11 (b)	2462.0	Right 15° Tilt	16.5	15.5	0.00	0.58	0.73
1	2412.0	Left Cheek	16.5				0.00
6	2437.0	Left Cheek	16.5	16.4	-0.03	0.45	0.46
11	2462.0	Left Cheek	16.5				0.00
6	2437.0	Left 15° Tilt	16.5	16.4	0.02	0.50	0.51

Table 11.1-10a SAR results for WiFi/WLAN/802.11b/g head configuration at full power tested on RGB141LW

This report shall NOT be reproduced except in full without the written consent of RTS
Copyright 2005-2013, RTS, A division of BlackBerry Limited

Measured/Extrapolated SAR Values - Head - 802.11g 2450 MHz level_CDMA_BC1 Mode							
Channel	Freq. (MHz)	Position	Cond. Output Power (dBm)		Power Drift (dB)	1g SAR (W/Kg)	
			Declared	Measured		Measured	Extrapolated
1	2412.0	Right Cheek					0.00
6	2437.0	Right Cheek	13.5	13.2	0.20	0.35	0.38
11	2462.0	Right Cheek					0.00
6	2437.0	Right 15° Tilt	13.5	13.2	0.22	0.43	0.46
1	2412.0	Left Cheek					0.00
6	2437.0	Left Cheek	13.5	13.2	0.02	0.20	0.21
11	2462.0	Left Cheek					0.00
6	2437.0	Left 15° Tilt	13.5	13.2	0.15	0.22	0.24

Table 11.1-10b SAR results for WiFi/WLAN/802.11g head configuration at CDMA_BC1 power level tested on RGB141LW

- There are two fixed Wi-Fi power reductions when transmitting simultaneously with CDMA/SVLTE (data/voice)

    1) WiFi at lower CDMA_BC1 power level.
    2) WiFi at lower SVLTE_BC1_25 power level.

Measured/Extrapolated SAR Values - Head - 802.11g 2450 MHz Lower Power Level SVLTE_CDMA_BC1_25 mode							
Channel	Freq. (MHz)	Position	Cond. Output Power (dBm)		Power Drift (dB)	1g SAR (W/Kg)	
			Declared	Measured		Measured	Extrapolated
1	2412.0	Right Cheek					0.00
6	2437.0	Right Cheek	8.0	7.2	0.08	0.09	0.11
11	2462.0	Right Cheek					0.00
6	2437.0	Right 15° Tilt	8.0	7.2	0.14	0.11	0.13
1	2412.0	Left Cheek					0.00
6	2437.0	Left Cheek	8.0	7.2	0.13	0.05	0.06
11	2462.0	Left Cheek					0.00
6	2437.0	Left 15° Tilt	8.0	7.2	0.15	0.06	0.07

Table 11.1-10c SAR results for WiFi/WLAN/802.11g head configuration at SVLTE_BC1_25 power level tested on RGB141LW

This report shall NOT be reproduced except in full without the written consent of RTS
Copyright 2005-2013, RTS, A division of BlackBerry Limited

Measured/Extrapolated SAR Values - Head - Bluetooth 2450 MHz							
Channel	Freq. (MHz)	Position	Cond. Output Power (dBm)		Power Drift (dB)	1g SAR (W/Kg)	
			Declared	Measured		Measured	Extrapolated
0	2402.0	Right Cheek	9.5	9.5	0.23	0.10	0.10
39	2441.0	Right Cheek					0.00
78	2480.0	Right Cheek					0.00
0	2402.0	Right 15° Tilt	9.5	9.5	0.03	0.12	0.12
0	2402.0	Left Cheek	9.5	9.5	0.15	0.05	0.05
39	2441.0	Left Cheek					0.00
78	2480.0	Left Cheek					0.00
0	2402.0	Left 15° Tilt	9.5	9.5	0.23	0.05	0.05

Table 11.1-11 SAR results for Bluetooth head configuration tested on RFX101LW

This report shall NOT be reproduced except in full without the written consent of RTS
Copyright 2005-2013, RTS, A division of BlackBerry Limited

Measured/Extrapolated SAR Values - Head - 802.11a 5000 MHz Full Power Mode							
Channel	Freq. (MHz)	Position	Cond. Output Power (dBm)		Power Drift (dB)	1g SAR (W/Kg)	
			Declared	Measured		Measured	Extrapolated
36	**5180.0**	Right Cheek	16.0	15.8	0.46	0.42	0.44
40	5200.0	Right Cheek					0.00
44	5220.0	Right Cheek					0.00
48	5240.0	Right Cheek					0.00
52	**5260.0**	Right Cheek	16.0	15.5	0.07	0.38	0.43
56	5280.0	Right Cheek					0.00
60	5300.0	Right Cheek					0.00
64	5320.0	Right Cheek					0.00
104	**5520.0**	Right Cheek	16.0	15.4	0.41	0.54	0.62
116	5580.0	Right Cheek					0.00
124	5620.0	Right Cheek					0.00
136	5680.0	Right Cheek					0.00
140	5700.0	Right Cheek					0.00
149	**5745.0**	Right Cheek	16.0	15.2	0.25	0.50	0.60
153	5765.0	Right Cheek					0.00
157	5785.0	Right Cheek					0.00
161	5805.0	Right Cheek					0.00
165	5825.0	Right Cheek					0.00
104	5520.0	Right 15° Tilt	16.0	15.4	0.25	0.21	0.24
36	**5180.0**	Left Cheek	16.0	15.8	0.08	0.13	0.14
40	5200.0	Left Cheek					0.00
44	5220.0	Left Cheek					0.00
48	5240.0	Left Cheek					0.00
52	**5260.0**	Left Cheek	16.0	15.5	0.03	0.16	0.18
56	5280.0	Left Cheek					0.00
60	5300.0	Left Cheek					0.00
64	5320.0	Left Cheek					0.00
104	**5520.0**	Left Cheek	16.0	15.4	0.10	0.26	0.30
116	5580.0	Left Cheek					0.00
124	5620.0	Left Cheek					0.00
136	5680.0	Left Cheek					0.00
140	5700.0	Left Cheek					0.00
149	**5745.0**	Left Cheek	16.0	15.2	0.15	0.29	0.35
153	5765.0	Left Cheek					0.00
157	5785.0	Left Cheek					0.00
161	5805.0	Left Cheek					0.00
165	5825.0	Left Cheek					0.00
149	5745.0	Left 15° Tilt	16.0	15.2	0.36	0.17	0.20

Table 11.1-12a SAR results for WiFi/WLAN/802.11a head configuration at full power tested on RFX101LW

Note: Scans done on highest conducted power channels per sub band

This report shall NOT be reproduced except in full without the written consent of RTS
Copyright 2005-2013, RTS, A division of BlackBerry Limited

Measured/Extrapolated SAR Values - Head - 802.11a/n 5000 MHz CDMA_BC1 power level							
Channel	Freq. (MHz)	Position	Cond. Output Power (dBm)		Power Drift (dB)	1g SAR (W/Kg)	
			Declared	Measured		Measured	Extrapolated
36	**5180.0**	Right Cheek	13.0	13.0	0.11	0.22	0.22
40	5200.0	Right Cheek					0.00
44	5220.0	Right Cheek					0.00
48	5240.0	Right Cheek					0.00
52	**5260.0**	Right Cheek	13.0	12.9	0.16	0.27	0.28
56	5280.0	Right Cheek					0.00
60	5300.0	Right Cheek					0.00
64	5320.0	Right Cheek					0.00
104 (a)	**5520.0**	Right Cheek	13.0	12.6	0.11	0.33	0.36
104 (n)	**5520.0**	Right Cheek	13.0	13.0	-0.15	0.24	0.24
116	5580.0	Right Cheek					0.00
124	5620.0	Right Cheek					0.00
136	5680.0	Right Cheek					0.00
140	5700.0	Right Cheek					0.00
149	**5745.0**	Right Cheek	13.0	12.5	0.08	0.19	0.21
153	5765.0	Right Cheek					0.00
157	5785.0	Right Cheek					0.00
161	5805.0	Right Cheek					0.00
165	5825.0	Right Cheek					0.00
104	5520.0	Right 15° Tilt					0.00
36	**5180.0**	Left Cheek					0.00
40	5200.0	Left Cheek					0.00
44	5220.0	Left Cheek					0.00
48	5240.0	Left Cheek					0.00
52	**5260.0**	Left Cheek					0.00
56	5280.0	Left Cheek					0.00
60	5300.0	Left Cheek					0.00
64	5320.0	Left Cheek					0.00
104	**5520.0**	Left Cheek	13.0	12.6	-0.05	0.08	0.09
116	5580.0	Left Cheek					0.00
124	5620.0	Left Cheek					0.00
136	5680.0	Left Cheek					0.00
140	5700.0	Left Cheek					0.00
149	**5745.0**	Left Cheek					0.00
153	5765.0	Left Cheek					0.00
157	5785.0	Left Cheek					0.00
161	5805.0	Left Cheek					0.00
165	5825.0	Left Cheek					0.00

Table 11.1-12b SAR results for WiFi/WLAN/802.11a head configuration at CDMA_BC1 power level tested on RGB141LW

- There are two fixed Wi-Fi power reductions when transmitting simultaneously with CDMA/SVLTE (data/voice)

    1) WiFi at lower CDMA_BC1 power level.

This report shall NOT be reproduced except in full without the written consent of RTS
Copyright 2005-2013, RTS, A division of BlackBerry Limited

2) WiFi at lower SVLTE_BC1_25 power level.

Measured/Extrapolated SAR Values - Head - 802.11a/n 5000 MHz SVLTE_CDMA_BC1_25 power level							
Channel	Freq. (MHz)	Position	Cond. Output Power (dBm)		Power Drift (dB)	1g SAR (W/Kg)	
			Declared	Measured		Measured	Extrapolated
36	**5180.0**	Right Cheek	9.0	7.6	0.01	0.03	0.04
40	5200.0	Right Cheek					0.00
44	5220.0	Right Cheek					0.00
48	5240.0	Right Cheek					0.00
52	**5260.0**	Right Cheek	9.0	7.4	0.18	0.03	0.04
56	5280.0	Right Cheek					0.00
60	5300.0	Right Cheek					0.00
64	5320.0	Right Cheek					0.00
104	**5520.0**	Right Cheek	9.0	8.0	-0.06	0.05	0.06
116	5580.0	Right Cheek					0.00
124	5620.0	Right Cheek					0.00
136	5680.0	Right Cheek					0.00
140	5700.0	Right Cheek					0.00
149	**5745.0**	Right Cheek	9.0	7.7	-0.01	0.05	0.07
153	5765.0	Right Cheek					0.00
157	5785.0	Right Cheek					0.00
161	5805.0	Right Cheek					0.00
165	5825.0	Right Cheek					0.00
104	5520.0	Right 15° Tilt					0.00
36	**5180.0**	Left Cheek					0.00
40	5200.0	Left Cheek					0.00
44	5220.0	Left Cheek					0.00
48	5240.0	Left Cheek					0.00
52	**5260.0**	Left Cheek					0.00
56	5280.0	Left Cheek					0.00
60	5300.0	Left Cheek					0.00
64	5320.0	Left Cheek					0.00
104	**5520.0**	Left Cheek	9.0	8.0	0.02	0.02	0.03
116	5580.0	Left Cheek					0.00
124	5620.0	Left Cheek					0.00
136	5680.0	Left Cheek					0.00
140	5700.0	Left Cheek					0.00
149	**5745.0**	Left Cheek					0.00
153	5765.0	Left Cheek					0.00
157	5785.0	Left Cheek					0.00
161	5805.0	Left Cheek					0.00
165	5825.0	Left Cheek					0.00
149	5745.0	Left 15° Tilt					0.00

Table 11.1-12c SAR results for WiFi/WLAN/802.11a head configuration at SVLTE_BC1_25 power level tested on RGB141LW

This report shall NOT be reproduced except in full without the written consent of RTS
Copyright 2005-2013, RTS, A division of BlackBerry Limited

11.2 SAR measurement results at highest power measured against the body using accessories

Measured/Extrapolated SAR Values - Hotspot/Body-Worn - GSM/EDGE/GPRS 850 MHz									
Ch.	Freq. (MHz)	Time Slots	spacing (cm)/ holster	Side Facing Phantom	Cond. Output Power (dBm)		Power Drift (dB)	1g SAR (W/Kg)	
					Declared	Measured		Measured	Extrapolated
Hotspot									
128	824.2	1	1.0	Back					0.00
190	836.6	1	1.0	Back	32.5	32.1	0.08	0.64	0.70
251	848.8	1	1.0	Back					0.00
190	836.6	2	1.0	Back	30.0	29.9	0.04	0.78	0.80
128	824.2	3	1.0	Back	29.0	29.0	-0.03	0.78	0.78
190	836.6	3	1.0	Back	29.0	28.7	-0.06	0.97	1.04
190	836.6	3	1.0	Back*	29.0	28.7	-0.04	0.96	1.03
251	848.8	3	1.0	Back	29.0	28.9	0.01	0.92	0.94
190	836.6	4	1.0	Back	27.0	26.8	-0.04	0.81	0.85
190	836.6	3	1.0	Front	29.0	28.7	-0.02	0.75	0.80
190	836.6	3	1.0	Left	29.0	28.7	0.08	0.52	0.56
190	836.6	3	1.0	Right	29.0	28.7	0.06	0.39	0.42
190	836.6	3	1.0	Bottom	29.0	28.7	-0.01	0.27	0.29
190	836.6	3	1.0	+HS					0.00
Body-worn									
190	836.6	3	1.5	Back	29.0	28.7	-0.03	0.65	0.70
190	836.6	3	1.5	Front	29.0	28.7	0.03	0.59	0.63
190	836.6	3	Holster	Back	29.0	28.7	-0.08	0.55	0.59

*2nd Scan

Table 11.2-1a SAR results for GSM/EDGE/GPRS 850 body-worn and Hotspot configuration tested on RFX101LW

Note 1: SAR data was taken on model RFX101LW due to the same WiFi/BT design, PCB, and Cellular/WiFi/BT antennas as RGB141LW. Please refer to the hardware similarity document for more details.

Note 2: For all common bands between RFX101LW and RGB141LW, SAR was spot-checked on RGB141LW due to different antenna tuning on GSM/EDGE/GPRS/UMTS/LTE modes/bands. Please refer to the hardware similarity document for more details.

Note 3: If the power drift is ≤ – 0.200 dB, the extrapolated SAR is calculated using the formula:

Extrapolated SAR = (Measured SAR) * 10^(|Power Drift (dB)| / 10)

Note 4: Only Middle channel was tested when 1g Average SAR <0.8 W/Kg or 3dB lower than the limit.

Note 5: Device was tested with 15 mm RIM recommended separation distance to allow typical after-market holster to be used. RIM body-worn holsters with belt-clip have been designed to maintain ~ 20 mm separation distance from body.

Note 6: For Hot Spot mode any side of the phone that is further than 2.5 cm away from the transmitting antenna can be exempted from testing.

This report shall NOT be reproduced except in full without the written consent of RTS
Copyright 2005-2013, RTS, A division of BlackBerry Limited

Measured/Extrapolated SAR Values - Hotspot/Body-Worn - GSM/EDGE/GPRS 850 MHz									
Ch.	Freq. (MHz)	Time Slots	spacing (cm)/ holster	Side Facing Phantom	Cond. Output Power (dBm)		Power Drift (dB)	1g SAR (W/Kg)	
					Declared	Measured		Measured	Extrapolated
Hotspot									
128	824.2	1	1.0	Back					0.00
190	836.6	1	1.0	Back					0.00
251	848.8	1	1.0	Back					0.00
190	836.6	2	1.0	Back					0.00
190	836.6	3	1.0	Back	29.0	28.7	-0.04	0.73	0.78
190	836.6	4	1.0	Back					0.00
190	836.6	2	1.0	Front					0.00
190	836.6	2	1.0	Left					0.00
190	836.6	2	1.0	Right					0.00
190	836.6	2	1.0	Bottom					0.00
190	836.6	2	1.0	+HS					0.00
Body-Worn									
190	836.6	2	1.5	Back	30.0	29.9	0.07	0.49	0.50
190	836.6	2	1.5	Front					0.00

Table 11.2-1b SAR results for GSM/EDGE/GPRS 850 body-worn and Hotspot configuration tested on RGB141LW

Measured/Extrapolated SAR Values - Hotspot/Body-Worn - WCDMA FDD V 850 MHz								
Ch.	Freq. (MHz)	spacing (cm)/ holster	Side Facing Phantom	Cond. Output Power (dBm)		Power Drift (dB)	1g SAR (W/Kg)	
				Declared	Measured		Measured	Extrapolated
Hotspot								
4132	826.4	1.0	Back					0.00
4182	836.4	1.0	Back	23.5	23.1	-0.11	0.50	0.55
4233	846.6	1.0	Back					0.00
4182	836.4	1.0	Front	23.5	23.1	-0.01	0.44	0.48
4182	836.4	1.0	Left	23.5	23.1	-0.08	0.32	0.35
4182	836.4	1.0	Right	23.5	23.1	-0.07	0.26	0.29
4182	836.4	1.0	Bottom	23.5	23.1	0.01	0.16	0.18
4182	836.4	1.0	+HS					0.00
Body-Worn								
4182	836.4	1.5	Back	23.5	23.1	-0.01	0.38	0.42
4182	836.4	1.5	Front	23.5	23.1	-0.01	0.34	0.37
4182	836.4	Holster	Back	23.5	23.1	0.02	0.28	0.31

Table 11.2-2a SAR results for WCDMA FDD V body-worn and Hotspot configuration tested on RFX101LW

This report shall NOT be reproduced except in full without the written consent of RTS
Copyright 2005-2013, RTS, A division of BlackBerry Limited

Measured/Extrapolated SAR Values - Hotspot/Body-Worn - WCDMA FDD V 850 MHz								
Ch.	Freq. (MHz)	spacing (cm)/ holster	Side Facing Phantom	Cond. Output Power (dBm)		Power Drift (dB)	1g SAR (W/Kg)	
				Declared	Measured		Measured	Extrapolated
Hotspot								
4132	826.4	1.0	Back					0.00
4182	836.4	1.0	Back	23.5	23.1	0.01	0.56	0.61
4233	846.6	1.0	Back					0.00
4182	836.4	1.0	Front					0.00
4182	836.4	1.0	Left					0.00
4182	836.4	1.0	Right					0.00
4182	836.4	1.0	Bottom					0.00
4182	836.4	1.0	+HS					0.00
Body-Worn								
4182	836.4	1.5	Back	23.5	23.1	0.05	0.36	0.39

Table 11.2-2b SAR results for WCDMA FDD V body-worn and Hotspot configuration tested on RGB141LW

Measured/Extrapolated SAR Values - Hotspot/Body-Worn - CDMA 800 MHz								
Ch.	Freq. (MHz)	spacing (cm)/ holster	Side Facing Phantom	Cond. Output Power (dBm)		Power Drift (dB)	1g SAR (W/Kg)	
				Declared	Measured		Measured	Extrapolated
Hotspot								
476	817.9	1.0	Back	24.5	24.5	-0.16	0.94	0.94
580	820.5	1.0	Back	24.5	24.3	-0.19	0.91	0.95
684	823.1	1.0	Back	24.5	24.3	0.03	0.95	0.99
684	823.1	1.0	Back*	24.5	24.3	0.03	0.95	0.99
580	820.5	1.0	Front	24.5	24.3	0.04	0.61	0.64
580	820.5	1.0	Left	24.5	24.3	0.03	0.29	0.30
580	820.5	1.0	Right	24.5	24.3	0.09	0.39	0.41
580	820.5	1.0	Bottom	24.5	24.3	0.09	0.45	0.47
580	820.5	1.0	+HS					0.00
Body-Worn								
580	820.5	1.5	Back	24.5	24.3	0.04	0.59	0.62
580	820.5	1.5	Front	24.5	24.3	0.01	0.43	0.45
580	820.5	Holster	Back	24.5	24.3	0.10	0.43	0.45

*2nd Scan

Table 11.2-3 SAR results for CDMA 800 BC10 body-worn and Hotspot configuration tested on RGB141LW

This report shall NOT be reproduced except in full without the written consent of RTS
Copyright 2005-2013, RTS, A division of BlackBerry Limited

Measured/Extrapolated SAR Values - Hotspot/Body-Worn - CDMA 850 MHz								
Ch.	Freq. (MHz)	spacing (cm)/ holster	Side Facing Phantom	Cond. Output Power (dBm)		Power Drift (dB)	1g SAR (W/Kg)	
				Declared	Measured		Measured	Extrapolated
Hotspot								
1013	824.7	1.0	Back	24.5	24.4	0.11	0.98	1.00
1013	824.7	1.0	Back*	24.5	24.4	0.07	1.00	1.02
384	836.5	1.0	Back	24.5	24.1	0.07	0.82	0.90
777	848.5	1.0	Back	24.5	24.1	0.06	0.86	0.94
384	836.5	1.0	Front	24.5	24.1	-0.09	0.65	0.71
384	836.5	1.0	Left	24.5	24.1	0.00	0.27	0.30
384	836.5	1.0	Right	24.5	24.1	0.10	0.33	0.36
384	836.5	1.0	Bottom	24.5	24.1	0.05	0.36	0.39
384	836.5	1.0	+HS					0.00
Body-Worn								
384	836.5	1.5	Back	24.5	24.1	0.03	0.56	0.61
384	836.5	1.5	Front	24.5	24.1	0.01	0.43	0.47
384	836.5	Holster	Back	24.5	24.1	-0.01	0.40	0.44

*2nd Scan

Table 11.2-4 SAR results for CDMA 850 BC0 body-worn and Hotspot configuration tested on RGB141LW

Measured/Extrapolated SAR Values - Body-Worn - SVLTE Band 25 1900 MHz											
Channel	Freq. (MHz)	Spacing (cm)/ Holster	Mod.	RB #	RB Offset	Side facing phantom	Cond. Output Power (dBm)		Power Drift (dB)	1g SAR (W/Kg)	
							Declared	Measured		Measured	Extrapolated
Body-Worn											
26140	1860.0	1.5	QPSK	1	50	Back					0.00
26140	1860.0	1.5	QPSK	50	50	Back	18.0	17.8	0.11	0.11	0.12
26365	1882.5	1.5	QPSK	100	0	Back					0.00
26140	1860.0	1.5	QPSK	50	50	Front	18.0	17.8	0.09	0.10	0.10
26140	1860.0	Holster	QPSK	50	50	Back	18.0	17.8	0.03	0.00	0.00

Table 11.2-5 SAR results for SVLTE band 25 (20MHz BW) body-worn configuration tested on RGB141LW

Note 1: If the power drift is ≤ – 0.200 dB, the extrapolated SAR is calculated using the formula:

Extrapolated SAR = (Measured SAR) * 10^(|Power Drift (dB)| / 10)

Note 2: Only Middle channel was tested when 1g Average SAR <0.8 W/Kg or 3dB lower than the limit.

Note 3: Device was tested with 15 mm RIM recommended separation distance to allow typical after-market holster to be used. RIM body-worn holsters with belt-clip have been designed to maintain ~ 20 mm separation distance from body.

Note 4: For Hot Spot mode any side of the phone that is further than 2.5 cm away from the transmitting antenna can be exempted from testing.

Note 5: Only required to test the configuration (channel and offset) yielding the highest conducted power for RB 1 and RB 50% when combined 1g avg. SAR <0.8 W/Kg or 3dB lower than the limit for both cases. Also, when the highest conducted power for RB 1 and RB 50% are both greater than RB 100%, then SAR testing for RB 100% can be excluded.

This report shall NOT be reproduced except in full without the written consent of RTS
Copyright 2005-2013, RTS, A division of BlackBerry Limited

Note 6: If 1g avg. SAR >0.8 W/Kg or not at least 3dB lower than the limit, than the remaining channels for that RB number must be tested and one additional scan must be done with RB 100%. For all additional scans the highest conducted power configuration (channel and offset) must be used.
Note 7: For LTE if SAR > 1.45, then SAR tests for the smaller bandwidths are required
Note 8: Tested only the highest bandwidth since conducted power on other bandwidths is about the same.
Note 9: Did not test 16 QAM as conducted power was lower than QPSK.

Measured/Extrapolated SAR Values - Hotspot/Body-Worn - LTE Band 25 1900 MHz											
Channel	Freq. (MHz)	Spacing (cm)/ Holster	Mod.	RB #	RB Offset	Side facing phantom	Cond. Output Power (dBm)		Power Drift (dB)	1g SAR (W/Kg)	
							Declared	Measured		Measured	Extrapolated
Hotspot											
26140	1860.0	1.0	QPSK	1	99	Back	23.5	23.2	-0.10	0.74	0.79
26365	1882.5	1.0	QPSK	1	50	Back					0.00
26590	1905.0	1.0	QPSK	1	50	Back					0.00
26140	1860.0	1.0	QPSK	50	50	Back	22.5	22.2	0.02	0.79	0.85
26365	1882.5	1.0	QPSK	100	0	Back	22.5	22.1	-0.07	0.71	0.78
26140	1860.0	1.0	QPSK	50	50	Front	22.5	22.2	0.09	0.41	0.44
26140	1860.0	1.0	QPSK	50	50	Left	22.5	22.2	-0.01	0.25	0.27
26140	1860.0	1.0	QPSK	50	50	Right	22.5	22.2	0.01	0.09	0.10
26140	1860.0	1.0	QPSK	50	50	Top					0.00
26140	1860.0	1.0	QPSK	50	50	Bottom	22.5	22.2	0.01	0.09	0.10
26140	1860.0	1.0	QPSK	50	50	+HS					0.00
Body-Worn											
26140	1860.0	1.5	QPSK	1	99	Back					0.00
26140	1860.0	1.5	QPSK	50	50	Back	22.5	22.2	0.04	0.26	0.28
26365	1882.5	1.5	QPSK	100	0	Back					0.00
26140	1860.0	1.5	QPSK	50	50	Front	22.5	22.2	0.03	0.22	0.24
26140	1860.0	Holster	QPSK	50	50	Back	22.5	22.2	0.19	0.28	0.30

Table 11.2-6 SAR results for LTE band 25 (20MHz BW) body-worn and Hotspot configuration tested on RGB141LW

This report shall NOT be reproduced except in full without the written consent of RTS
Copyright 2005-2013, RTS, A division of BlackBerry Limited

Measured/Extrapolated SAR Values - Hotspot/Body-Worn - GSM/EDGE/GPRS 1900 MHz									
Ch.	Freq. (MHz)	Time Slots	spacing (cm)/ holster	Side Facing Phantom	Cond. Output Power (dBm)		Power Drift (dB)	1g SAR (W/Kg)	
					Declared	Measured		Measured	Extrapolated
Hotspot									
512	1850.2	1	1.0	Back					0.00
661	1880.0	1	1.0	Back	29.0	28.9	-0.03	0.65	0.67
810	1909.8	1	1.0	Back					0.00
661	1880.0	2	1.0	Back	28.5	28.2	-0.09	0.89	0.95
661	1880.0	3	1.0	Back	26.0	25.8	0.09	0.81	0.85
512	1850.2	4	1.0	Back	25.5	25.4	0.04	0.88	0.90
661	1880.0	4	1.0	Back	25.5	25.3	0.05	0.91	0.95
661	1880.0	4	1.0	Back*	25.5	25.3	0.07	0.96	1.01
810	1909.8	4	1.0	Back	25.5	25.3	0.10	0.76	0.80
661	1880.0	4	1.0	Front	25.5	25.3	0.05	0.59	0.62
661	1880.0	4	1.0	Left	25.5	25.3	-0.04	0.51	0.53
661	1880.0	4	1.0	Right	25.5	25.3	0.06	0.08	0.08
661	1880.0	4	1.0	Bottom	25.5	25.3	-0.05	0.20	0.21
661	1880.0	4	1.0	+HS					0.00
Body-Worn									
661	1880.0	4	1.5	Back	25.5	25.3	0.02	0.57	0.60
661	1880.0	4	1.5	Front	25.5	25.3	0.00	0.31	0.32
661	1880.0	4	Holster	Back	25.5	25.3	-0.06	0.26	0.27

*2nd Scan

Table 11.2-7a SAR results for GSM/EDGE/DTM 1900 body-worn and Hotspot configuration tested on RFX101LW

Measured/Extrapolated SAR Values - Hotspot/Body-Worn - GSM/EDGE/GPRS 1900 MHz									
Ch.	Freq. (MHz)	Time Slots	spacing (cm)/ holster	Side Facing Phantom	Cond. Output Power (dBm)		Power Drift (dB)	1g SAR (W/Kg)	
					Declared	Measured		Measured	Extrapolated
Hotspot									
512	1850.2	1	1.0	Back					0.00
661	1880.0	1	1.0	Back					0.00
810	1909.8	1	1.0	Back					0.00
661	1880.0	2	1.0	Back					0.00
661	1880.0	3	1.0	Back					0.00
661	1880.0	4	1.0	Back	25.5	25.3	0.01	0.56	0.59
661	1880.0	1	1.0	Front					0.00
661	1880.0	1	1.0	Left					0.00
661	1880.0	1	1.0	Right					0.00
661	1880.0	1	1.0	Bottom					0.00
661	1880.0	1	1.0	+HS					0.00
Body-Worn									
661	1880.0	4	1.5	Back	25.5	25.3	0.07	0.29	0.30
661	1880.0	1	1.5	Front					0.00

This report shall NOT be reproduced except in full without the written consent of RTS
Copyright 2005-2013, RTS, A division of BlackBerry Limited

Table 11.2-7b SAR results for GSM/EDGE/DTM 1900 body-worn and Hotspot configuration tested on RGB141LW

Measured/Extrapolated SAR Values - Hotspot/Body-Worn - WCDMA FDD II 1900 MHz								
Ch.	Freq. (MHz)	spacing (cm)/ holster	Side Facing Phantom	Cond. Output Power (dBm)		Power Drift (dB)	1g SAR (W/Kg)	
				Declared	Measured		Measured	Extrapolated
Hotspot								
9262	1852.4	1.0	Back	23.5	23.0	-0.03	1.03	1.16
9400	1880.0	1.0	Back	23.5	23.0	-0.14	**1.19**	**1.34**
9400	1880.0	1.0	Back*	23.5	23.0	-0.10	1.12	1.26
9538	1907.6	1.0	Back	23.5	23.0	0.13	0.94	1.05
9400	1880.0	1.0	Front	23.5	23.0	0.06	0.82	0.92
9400	1880.0	1.0	Left	23.5	23.0	-0.10	0.82	0.92
9400	1880.0	1.0	Right	23.5	23.0	0.03	0.11	0.12
9400	1880.0	1.0	Bottom	23.5	23.0	-0.03	0.28	0.31
9400	1880.0	1.0	+HS					0.00
Body-Worn								
9262	1852.4	1.5	Back	23.5	23.0	-0.10	0.61	0.68
9400	1880.0	1.5	Back	23.5	23.0	0.07	**0.77**	**0.86**
9538	1907.6	1.5	Back	23.5	23.0	0.03	0.50	0.56
9400	1880.0	1.5	Front	23.5	23.0	0.00	0.43	0.48

*2nd Scan

Table 11.2-8a SAR results for WCDMA FDD II body-worn and Hotspot configuration tested on RFX101LW

Measured/Extrapolated SAR Values - Hotspot/Body-Worn - WCDMA FDD II 1900 MHz								
Ch.	Freq. (MHz)	spacing (cm)/ holster	Side Facing Phantom	Cond. Output Power (dBm)		Power Drift (dB)	1g SAR (W/Kg)	
				Declared	Measured		Measured	Extrapolated
Hotspot								
9262	1852.4	1.0	Back					0.00
9400	1880.0	1.0	Back	23.5	23.0	-0.16	0.59	0.66
9538	1907.6	1.0	Back					0.00
9400	1880.0	1.0	Front					0.00
9400	1880.0	1.0	Left					0.00
9400	1880.0	1.0	Right					0.00
9400	1880.0	1.0	Bottom					0.00
9400	1880.0	1.0	+HS					0.00
Body-Worn								
9400	1880.0	1.5	Back	23.5	23.0	-0.05	0.30	0.34
9400	1880.0	1.5	Front					0.00

Table 11.2-8b SAR results for WCDMA FDD II body-worn and Hotspot configuration tested on RGB141LW

This report shall NOT be reproduced except in full without the written consent of RTS
Copyright 2005-2013, RTS, A division of BlackBerry Limited

Measured/Extrapolated SAR Values - Hotspot/Body-Worn - CDMA 1900 MHz								
Ch.	Freq. (MHz)	spacing (cm)/ holster	Side Facing Phantom	Cond. Output Power (dBm)		Power Drift (dB)	1g SAR (W/Kg)	
				Declared	Measured		Measured	Extrapolated
Hotspot								
25	1850.2	1.0	Back	24.0	24.0	0.10	0.80	0.80
600	1880.0	1.0	Back	24.0	24.0	-0.07	0.85	0.85
600	1880.0	1.0	Back*	24.0	24.0	-0.10	0.85	0.85
1175	1909.8	1.0	Back	24.0	23.9	-0.05	0.72	0.74
25	1850.2	1.0	Front	24.0	24.0	-0.07	1.09	1.09
600	1880.0	1.0	Front	24.0	24.0	-0.10	1.07	1.07
600	1880.0	1.0	Front*	24.0	24.0	0.08	1.09	1.09
1175	1909.8	1.0	Front	24.0	23.9	0.10	1.08	1.11
600	1880.0	1.0	Left	24.0	24.0	-0.03	0.18	0.18
25	1850.2	1.0	Right	24.0	24.0	0.08	0.82	0.82
600	1880.0	1.0	Right	24.0	24.0	-0.03	0.87	0.87
1175	1909.8	1.0	Right	24.0	23.9	-0.10	0.79	0.81
600	1880.0	1.0	Bottom	24.0	24.0	-0.09	0.41	0.41
661	1880.0	1.0	HS					0.00
Body-Worn								
600	1880.0	1.5	Back	24.0	24.0	0.05	0.47	0.47
600	1880.0	1.5	Front	24.0	24.0	0.02	0.70	0.70
600	1880.0	Holster	Back	24.0	24.0	0.14	0.42	0.42

*2nd Scan

Table 11.2-9 SAR results for CDMA 1900 BC1 body-worn and Hotspot configuration tested on RGB141LW

This report shall NOT be reproduced except in full without the written consent of RTS
Copyright 2005-2013, RTS, A division of BlackBerry Limited

Measured/Extrapolated SAR Values - Hotspot/Body-Worn - 802.11g 2450 MHz Full Power Mode								
Ch.	Freq. (MHz)	spacing (cm)/ holster	Side Facing Phantom	Cond. Output Power (dBm)		Power Drift (dB)	1g SAR (W/Kg)	
				Declared	Measured		Measured	Extrapolated
Hotspot								
1	2412	1.0	Back					0.00
6	2437	1.0	Back	11.5	11.4	0.20	0.19	0.19
11	2462	1.0	Back					0.00
6	2437	1.0	Front	11.5	11.4	0.43	0.05	0.05
6	2437	1.0	Left	11.5	11.4	0.00	0.03	0.03
6	2437	1.0	Right	11.5	11.4	0.38	0.00	0.00
6	2437	1.0	Top	11.5	11.4	0.01	0.09	0.09
6	2437	1.0	Bottom					0.00
6	2437	1.0	+HS					0.00
Body-Worn								
6	2437	1.5	Back	16.5	16.4	0.02	0.22	0.23
6	2437	1.5	Front	16.5	16.4	-0.10	0.07	0.07
6	2437	Holster	Back	16.5	16.4	-0.01	0.11	0.11

Table 11.2-10a SAR results for WiFi/WLAN/802.11g body-worn and Hotspot configuration tested on RGB141LW at full/maximum power level

Measured/Extrapolated SAR Values - Body-Worn - 802.11g 2450 MHz CDMA_BC1 power level								
Ch.	Freq. (MHz)	spacing (cm)/ holster	Side Facing Phantom	Cond. Output Power (dBm)		Power Drift (dB)	1g SAR (W/Kg)	
				Declared	Measured		Measured	Extrapolated
6	2437	1.5	Back	13.5	13.2	0.07	0.12	0.13
6	2437	1.5	Front	13.5	13.2	0.15	0.03	0.03
6	2437	Holster	Back	13.5	13.2	0.27	0.00	0.00
6	2437	Holster	Front	13.5	13.2	0.33	0.00	0.00

Table 11.2-10b SAR results for WiFi/WLAN/802.11g body-worn configuration at CDMA_BC1 power level tested on RGB141LW

- There are two fixed Wi-Fi power reductions when transmitting simultaneously with CDMA/SVLTE (data/voice)

    1) WiFi at lower CDMA_BC1 power level.
    2) WiFi at lower SVLTE_BC1_25 power level.

This report shall NOT be reproduced except in full without the written consent of RTS
Copyright 2005-2013, RTS, A division of BlackBerry Limited

Measured/Extrapolated SAR Values - Body-Worn - 802.11g 2450 MHz SVLTE_CDMA_BC1_25 power level								
Ch.	Freq. (MHz)	spacing (cm)/ holster	Side Facing Phantom	Cond. Output Power (dBm)		Power Drift (dB)	1g SAR (W/Kg)	
				Declared	Measured		Measured	Extrapolated
6	2437	1.5	Back	8.5	7.2	-0.07	0.03	0.04
6	2437	1.5	Front	8.5	7.2	0.09	0.01	0.01
6	2437	Holster	Back	8.5	7.2	-0.25	0.00	0.00

Table 11.2-10c SAR results for WiFi/WLAN/802.11g body-worn configuration at SVLTE_BC1_25 power level tested on RGB141LW

Measured/Extrapolated SAR Values - Hotspot/Body-Worn - Bluetooth 2450 MHz								
Ch.	Freq. (MHz)	spacing (cm)/ holster	Side Facing Phantom	Cond. Output Power (dBm)		Power Drift (dB)	1g SAR (W/Kg)	
				Declared	Measured		Measured	Extrapolated
Hotspot								
2402	0	1.0	Back					0.00
2441	39	1.0	Back	9.5	9.5	-0.01	0.06	0.06
2480	78	1.0	Back					0.00
2441	39	1.0	Front	9.5	9.5	0.32	0.02	0.02
2441	39	1.0	Left					0.00
2441	39	1.0	Right					0.00
2441	39	1.0	Top	9.5	9.5	0.16	0.03	0.03
2441	39	1.0	Bottom					0.00
2441	39	1.0	+HS					0.00
Body-Worn								
2441	39	1.5	Back	9.5	9.5	-0.03	0.02	0.02
2441	39	1.5	Front					0.00

Table 11.2-11 SAR results for Bluetooth body-worn and Hotspot configuration tested on RFX101LW

This report shall NOT be reproduced except in full without the written consent of RTS
Copyright 2005-2013, RTS, A division of BlackBerry Limited

Measured/Extrapolated SAR Values - Body-Worn - 802.11a 5000 MHz Full Power Mode								
Ch.	Freq. (MHz)	spacing (cm)/ holster	Side Facing Phantom	Cond. Output Power (dBm)		Power Drift (dB)	1g SAR (W/Kg)	
				Declared	Measured		Measured	Extrapolated
36	5180	1.5	Back	16.0	15.8	-0.09	0.22	0.23
40	5200	1.5	Back					0.00
44	5220	1.5	Back					0.00
48	5240	1.5	Back					0.00
52	5260	1.5	Back	16.0	15.5	-0.09	0.23	0.26
56	5280	1.5	Back					0.00
60	5300	1.5	Back					0.00
64	5320	1.5	Back					0.00
104	5520	1.5	Back	16.0	15.4	-0.04	0.31	0.36
116	5580	1.5	Back					0.00
124	5620	1.5	Back					0.00
136	5680	1.5	Back					0.00
140	5700	1.5	Back					0.00
149	5745	1.5	Back	16.0	15.2	-0.13	0.36	0.43
153	5765	1.5	Back					0.00
157	5785	1.5	Back					0.00
161	5805	1.5	Back					0.00
165	5825	1.5	Back					0.00
149	5745	1.5	Front	16.0	15.2	-0.13	0.06	0.07
149	5745	Holster	Back	16.0	15.2	0.08	0.54	0.65
149	5745	Holster	Front	16.0	15.2	-0.03	0.08	0.10
149	5745	1.5	+HS					

Table 11.2-12a SAR results for WiFi/WLAN/802.11a body-worn configuration at full/maximum power tested on RFX101LW

This report shall NOT be reproduced except in full without the written consent of RTS
Copyright 2005-2013, RTS, A division of BlackBerry Limited

Measured/Extrapolated SAR Values - Body-Worn - 802.11a 5000 MHz CDMA_BC1 power level								
Ch.	Freq. (MHz)	spacing (cm)/ holster	Side Facing Phantom	Cond. Output Power (dBm)		Power Drift (dB)	1g SAR (W/Kg)	
				Declared	Measured		Measured	Extrapolated
36	5180	1.5	Back	13.0	13.0	-0.19	0.06	0.06
40	5200	1.5	Back					0.00
44	5220	1.5	Back					0.00
48	5240	1.5	Back					0.00
52	5260	1.5	Back	13.0	12.9	-0.14	0.16	0.16
56	5280	1.5	Back					0.00
60	5300	1.5	Back					0.00
64	5320	1.5	Back					0.00
104	5520	1.5	Back	13.0	12.6	0.04	0.14	0.15
116	5580	1.5	Back					0.00
124	5620	1.5	Back					0.00
136	5680	1.5	Back					0.00
140	5700	1.5	Back					0.00
149	5745	1.5	Back	13.0	12.5	-0.01	0.07	0.08
153	5765	1.5	Back					0.00
157	5785	1.5	Back					0.00
161	5805	1.5	Back					0.00
165	5825	1.5	Back					0.00
149	5745	1.5	Front					0.00
149	5745	Holster	Back	13.0	12.5	-0.09	0.09	0.10
149	5745	Holster	Front					0.00
149	5745	1.5	+HS					0.00

Table 11.2-12b SAR results for WiFi/WLAN/802.11a body-worn configuration at CDMA_BC1 power level tested on RGB141LW

- There are two fixed Wi-Fi power reductions when transmitting simultaneously with CDMA/SVLTE (data/voice)

    3) WiFi at lower CDMA_BC1 power level.
    4) WiFi at lower SVLTE_BC1_25 power level.

This report shall NOT be reproduced except in full without the written consent of RTS
Copyright 2005-2013, RTS, A division of BlackBerry Limited

Measured/Extrapolated SAR Values - Body-Worn - 802.11a 5000 MHz SVLTE_CDMA_BC1_25 power level								
Ch.	Freq. (MHz)	spacing (cm)/ holster	Side Facing Phantom	Cond. Output Power (dBm)		Power Drift (dB)	1g SAR (W/Kg)	
				Declared	Measured		Measured	Extrapolated
36	5180	1.5	Back	9.0	7.6	0.14	0.01	0.01
40	5200	1.5	Back					0.00
44	5220	1.5	Back					0.00
48	5240	1.5	Back					0.00
52	5260	1.5	Back	9.0	7.4	-0.18	0.02	0.03
56	5280	1.5	Back					0.00
60	5300	1.5	Back					0.00
64	5320	1.5	Back					0.00
104	5520	1.5	Back	9.0	8.0	0.03	0.03	0.04
116	5580	1.5	Back					0.00
124	5620	1.5	Back					0.00
136	5680	1.5	Back					0.00
140	5700	1.5	Back					0.00
149	5745	1.5	Back	9.0	7.7	-0.20	0.02	0.03
153	5765	1.5	Back					0.00
157	5785	1.5	Back					0.00
161	5805	1.5	Back					0.00
165	5825	1.5	Back					0.00
104	5520	1.5	Front					0.00
104	5520	Holster	Back	9.0	8.0	0.12	0.03	0.04
104	5520	Holster	Front					0.00
104	5520	1.5	+HS					0.00

Table 11.2-12c SAR results for WiFi/WLAN/802.11a body-worn configuration at SVLTE_BC1_25 power level tested on RGB141LW

This report shall NOT be reproduced except in full without the written consent of RTS
Copyright 2005-2013, RTS, A division of BlackBerry Limited

12.0 REFERENCES

[1] IEEE 1528-2003: Recommended Practice for Determining the Peak Spatial-Average Specific Absorption Rate (SAR) in the Human Head from Wireless Communications Devices: Measurement Techniques.

[2] EN 50360: 2001, Product standard to demonstrate the compliance of mobile phones with the basic restrictions related to human exposure to electromagnetic fields (300 MHz – 3 GHz)

[3] ICNIRP, International Commission on Non-Ionizing Radiation Protection (2009), Guidelines for limiting exposure in time-varying electric, magnetic, and electromagnetic fields (up to 300 GHz).

[4] Council Recommendation 1999/519/EC of July 1999 on the limitation of exposure of the general public to electromagnetic fields (0 Hz to 300 GHz)

[5] IEEE C95.3-2002, IEEE Recommended Practice for the Measurement of Potentially Hazardous Electromagnetic Fields – RF and Microwave.

[6] IEEE C95.1-2005, IEEE Standard for Safety Levels with Respect to Human Exposure to Radio Frequency Electromagnetic Fields, 3 kHz to 300 GHz.

[7] FCC 96-326, Guidelines for Evaluating the Environmental Effects of Radio-Frequency Radiation.

[8] DASY 5 DOSIMETRIC ASSESSMENT SYSTEM SOFTWARE MANUAL, Schmid & Partner Engineering AG.

[9] Health Canada, Safety Code 6, 2009: Limits of Human Exposure to Radiofrequency Electromagnetic Fields in the Frequency range from 3 kHz to 300 GHz.

[10] RSS-102, issue 4-2010: Evaluation Procedure for Mobile and Portable Radio Transmitters with respect to Health Canada's Safety Code 6 for Exposure of Humans to Radio Frequency Fields.

[11] IEC 62209-1, First Edition-2005: Human exposure to radio frequency fields from hand-held and body-mounted wireless communication devices – Human models, instrumentation, and procedures –Part 1: Procedure to determine the specific absorption rate (SAR) for hand-held devices used in close proximity to the ear (frequency range of 300 MHz to 3 GHz).

[12] IEC 62209-2, Edition 1.0-2010: Human exposure to radio frequency fields from hand-held and body-mount wireless communication devices – Human Models, instrumentation, and procedures - part 2 - procedure to determine the specific absorption rate (SAR) for wireless communication devices used in close proximity to the human body (frequency range of 30 MHz to 6 GHz).

[13] IEC/EN 62311-2008: Assessment of electronic and electrical equipment related to human exposure restrictions for electromagnetic fields (0 Hz – 300 GHz).

[14] 3GPP TS 36.521-1 V10.0.0 (2011-12): Evolved Universal Terrestrial Radio Access (E-UTRA); User Equipment (UE) conformance specification; Radio transmission and reception; Part 1: Conformance testing

[15] FCC OET SAR measurement 100 MHz to 6 GHz, KDB 865664 D01 v01, October 24, 2012.

This report shall NOT be reproduced except in full without the written consent of RTS
Copyright 2005-2013, RTS, A division of BlackBerry Limited

[16] FCC OET SAR Measurement Procedures for 802.11 a/b/g Transmitters, KDB 248227 D01 v01r02, May, 2007.

[17] FCC OET SAR Evaluation Considerations for Handsets with Multiple Transmitters & Antennas, KDB 648474 D04 v01, October 24, 2012.

[18] FCC OET SAR Test Reduction Procedure for GSM/GPRS/EDGE, KDB 941225 D03 vo1, December, 2008.

[19] FCC OET SAR Test Procedure for Evaluating SAR for GSM/(E)GPRS Dual Transfer Mode, KDB 941225 D04 v01, January 27, 2010.

[20] FCC OET RF Exposure Procedures for Mobile and Portable Devices, and Equipment Authorization Policies, KDB 447498 D01 v05, October 24, 2012.

[21] FCC OET SAR Measurements Procedures for 3G Devices, KDB 941225 D01 v02, October, 2007.

[22] FCC OET SAR Evaluation Procedure for Portable Devices with Wireless Router capability, KDB 941225 D06 Hot Spot SAR v01, April 04, 2011.

[23] FCC OET SAR Evaluation Considerations for LTE Devices, KDB 941225 D05 v02, October 24, 2012.

[24] FCC OET RF Exposure Compliance Reporting and Documentation Considerations, KDB 865664 D02 v01, October 24, 2012.

[25] IEEE 1528-2011: Draft "Recommended Practice for Determining the Peak Spatial-Average Specific Absorption Rate (SAR) in the Human Head from Wireless Communications Devices: Measurement Techniques."

[26] IEC 62209-1: 2011, Draft "Human exposure to radio frequency fields from hand-held and body-mounted wireless communication devices – Human models, instrumentation, and procedures –Part 1: Procedure to determine the specific absorption rate (SAR) for hand-held devices used in close proximity to the ear (frequency range of 300 MHz to 3 GHz)."

This report shall NOT be reproduced except in full without the written consent of RTS
Copyright 2005-2013, RTS, A division of BlackBerry Limited