User Guide

PRIV by BlackBerry smartphone

BlackBerry

Published: 2015-09-25
SWD-20150925173735832

Contents

Setup and basics 5
Your device at a glance 5
Insert the SIM card 6
Insert a media card 7
Move between home screens 8
Get around with navigation buttons 8
Touch screen gestures 9
Motion gestures 13
Apps, widgets, and shortcuts 15
Personalizing your device 17

Phone and voice 18
Phone icons 18
Find your own phone number 18
Change your ringtone 18
Making calls 19
Receiving calls 20
Blocking calls 22
Add a contact or number to your speed dial list 23
Call waiting and call forwarding 24
Start a conference call 24
Turn on Voice Over LTE 25
Wi-Fi calling 26
Voicemail 26

Keyboard, language, and typing 28
BlackBerry Keyboard and typing 28
Selecting word suggestions that appear while you type 32
Spell check 33
Creating custom text shortcuts 34
Language 35

Keyboard input methods....36

Applications and features....40
Find help for apps....40
Organizing your home screen....40
Clock....42
Hangouts....45
Search....45
Location services and Google Maps....48
Keyboard shortcuts....49
Google Chrome and Downloads....51
Printing....52

Settings....54
Customize your device settings....54
Overview of Quick Settings....54
Overview of device settings....55
Notifications....58
Storage space and media cards....65
Connections....67
Battery and power....94
Display....99
Accessibility....102
Users....104
Backup and reset....107
Update your device software....109

Security....110
Locks, passwords, and protecting your data....110
Finding and protecting a lost device....116
Security settings....118

Legal notice....122

Setup and basics

Your device at a glance

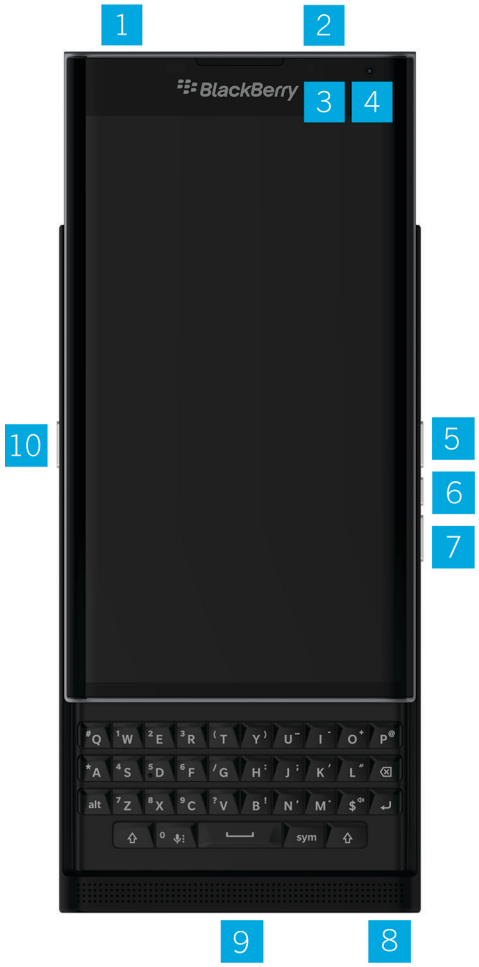

1. Nano SIM card tray
2. Media card (microSD card) tray
3. Notification LED

4. Front camera
5. Volume up
6. Mute
7. Volume down
8. Headset jack
9. Multi-function port (supports USB and video)
10. Power on/off key: Press to lock the screen; press and hold to power on/off; press and hold for 10 seconds to reset

Insert the SIM card

Your device uses a nano SIM card. If you don't have a SIM card or don't have the right type of SIM card, contact your service provider.

CAUTION: Do not use a larger SIM card that was cut to a smaller size. Your device might not recognize the SIM card, or the SIM card might get stuck because it is thicker than a nano SIM card.

1. Position your device so you can see the back cover and the top of the device.
2. Release the SIM card tray by pushing the tip of the tool (provided in the box) into the hole on the top-right side of your device. If you don't have the tool that came with your device, you can also use a paper clip.

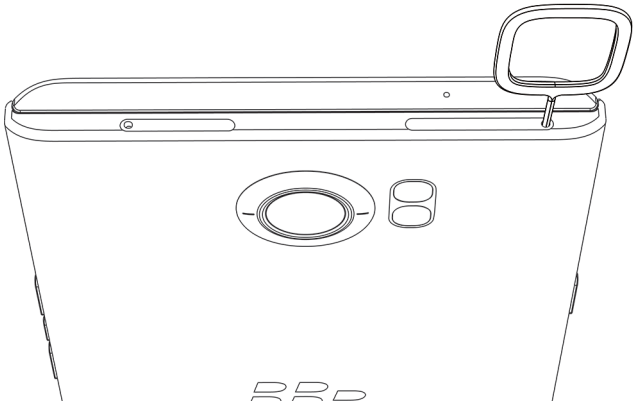

3. Pull out the tray completely and set it on a flat surface.
4. Hold the SIM card so that the metal contacts are facing down and the notch is aligned with the notch in the tray.
5. Put the SIM card in the tray.

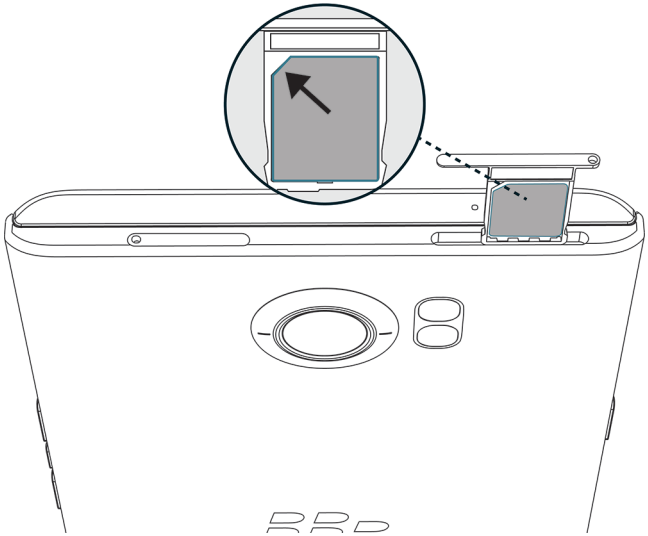

6. Push the tray back into the slot.

Insert a media card

If you want more storage for pictures, videos, music, and documents, you can insert a media card (microSD card).

1. Position your device so you can see the back cover and the top of the device.
2. Release the media card tray by pushing the tip of the tool (provided in the box) into the hole on the top-left side of your device. If you don't have the tool that came with your device, you can also use a paper clip.

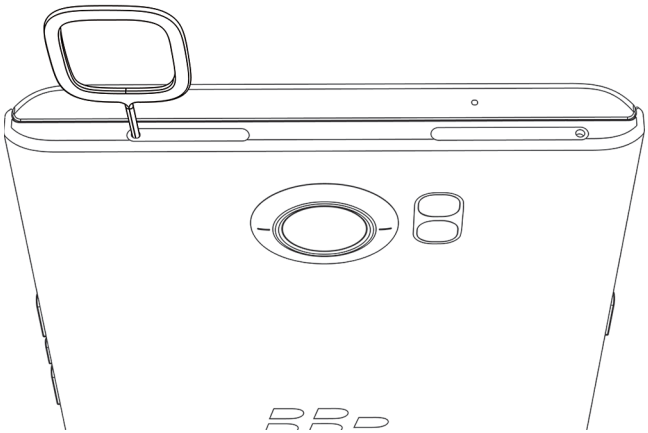

3. Pull out the tray completely and set it on a flat surface.
4. Hold the media card so that the metal contacts are facing down and the notch is aligned with the notch in the tray.
5. Put the media card in the tray.

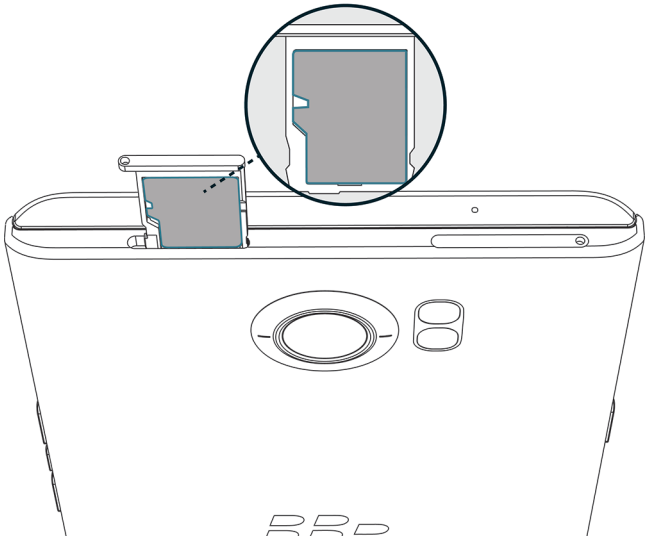

6. Push the tray back into the slot.

Move between home screens

You can move between your home screens with a gesture on the screen.

On the screen, swipe left or right.

Tip: You can also move between your home screens by swiping left or right on the physical keyboard, or by moving your finger across the dots that appear above the favorites tray.

Get around with navigation buttons

No matter what you're doing on your device, navigation buttons appear at the bottom of your screen.

Do any of the following:

- To go back to the previous screen, tap ◁ .
- To go to your home screen, tap ○ .
- To see your recently opened apps and screens, tap □ .

Touch screen gestures

Take a moment to learn the common gestures that you can use on the touch screen.

Wake up your device

Tap the screen twice.

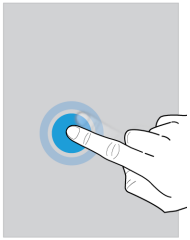

Select items

Do any of the following:

- To select an item, tap it. If the item can be opened, it opens.
- To select multiple items, such as photos that you want to share or email messages that you want to delete, touch and hold one item. Tap more items. To clear an item, tap it again.

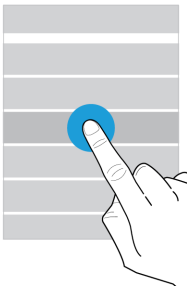

Scroll or move between items

Slide your finger to scroll through a list or move between items, such as photos.

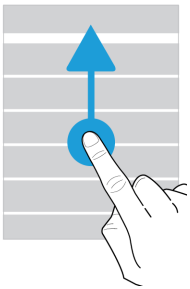

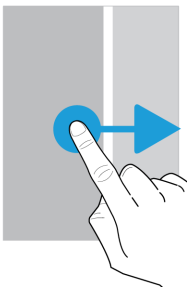

Check your notifications

You can check your latest notifications (for example, email messages and text messages) at any time.

Swipe down from the top of the screen. Tap a notification to open it or pull down to see more notifications.

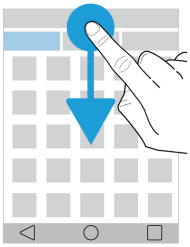

Open Quick Settings

You can open Quick Settings to turn on or turn off common settings such as Wi-Fi and airplane mode.

Swipe down from the top of the screen once using two fingers, or twice using one finger.

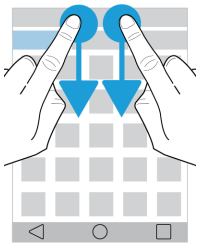

Open an app

You can open one of three default apps from anywhere on your device.

Slide your finger up from the bottom of the screen. Move your finger over the app that you want to open. Lift your finger.

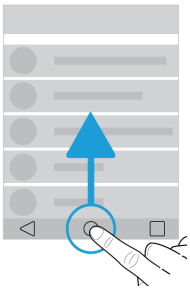

Use a slider

If a slider appears on your screen, you can progress through a file, such as a song or video, or adjust a setting, such as the screen brightness.

Drag the slider handle to the right or left.

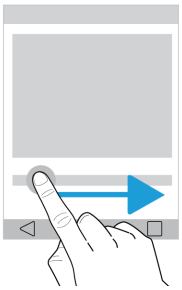

Zoom in to or zoom out from the screen

If you want to see something in more detail, such as a photo or part of a map, you can magnify the image.

To zoom in, slide two fingers apart.

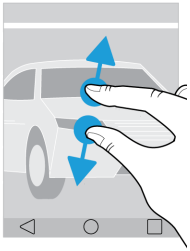

To zoom out, slide two fingers together.

Tip: In some cases, you can tap twice to zoom in or zoom out.

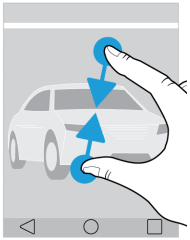

Motion gestures

You can use motion gestures to do things more quickly or efficiently. To turn motion gestures on or off, swipe down from the top of the screen once using two fingers, or twice using one finger. Tap ⚙ > **Advanced interactions**.

Flip to mute

If this feature is turned on, when you receive a call and it isn't a convenient time to respond, you can turn your device facedown on a flat surface to silence the ringtone or vibration. You still receive a notification of the missed call.

To turn this feature on or off, tap the **Flip to mute** switch.

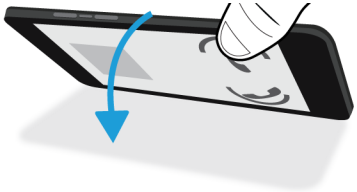

Flip to save power

If this feature is turned on, when you place your device facedown on a flat surface, your device goes into sleep mode to extend battery life. You still receive notifications for incoming calls, messages, and alarms.

To turn this feature on or off, tap the **Flip to save power** switch.

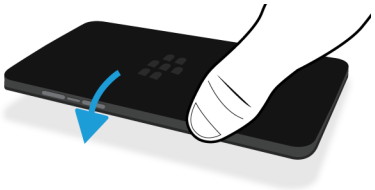

Hold to stay awake

If this feature is turned on, the screen stays on longer when you hold your device in your hand.

To turn this feature on or off, tap the **Hold to stay awake** switch.

Apps, widgets, and shortcuts

About apps, widgets, and shortcuts

When you tap on your home screen, a tray opens where you can access installed apps and widgets and set up shortcuts.

- The **Apps** tab includes a complete list of the apps installed on your device, including apps that you download on Google Play™.
- **Widgets** are like miniature apps that you can often interact with on the home screen. For example, the BBM widget shows a small view of your current chats. The Bookmarks widget shows all of the websites that you have bookmarked so that you can open them right from the home screen.
- **Shortcuts** help you perform the tasks that you do the most. For example, if you frequently write email, you can set up an email shortcut. Tapping the shortcut opens an email composer.

Search for installed apps, widgets, and shortcuts

1. On the home screen, tap .
2. Enter a search term in the **Search apps, widgets, and shortcuts** field.

Add an app, a widget, or a shortcut to your home screen

1. On the home screen, tap .
2. Tap **Apps**, **Widgets**, or **Shortcuts**.
3. Touch and hold an app, a widget, or a shortcut, and then release your finger when the home screen appears.

After you add a shortcut to your home screen, you might be prompted to set up the shortcut. For example, if you add the Email Contact shortcut, you must tap the contact that you want to send an email to.

About pop-up widgets

Pop-up widgets are associated with the apps that you add to the home screen. When you add an app that includes a pop-up widget, an indicator appears beneath the app icon ( ). Pop-up widgets are useful because they allow you to have widgets that don't take up space on the home screen.

Turn on pop-up widgets

1. Tap > .
2. Select the **Pop-up widgets** checkbox.

Open a pop-up widget for an app

On the home screen, swipe up or down on an app that has a pop-up widget.

Turn off pop-up widgets

On the home screen, do one of the following.

- To turn off a pop-up widget, swipe up or down on the app icon. In the upper-right corner of the widget, tap > **Disable Pop-up Widget**.
- To turn off all pop-up widgets, tap > . Clear the **Pop-up widgets** checkbox.

Change the pop-up widget for an app

When you first swipe your finger on an app that has more than one widget available, you're prompted to choose a widget to set as the pop-up widget. You can change the pop-up widget at any time.

1. Swipe up or down on an app icon.
2. In the upper-right corner of the widget, tap > **Change Widget**.
3. In the list of available widgets, tap another widget.

Turn off pop-up widgets

On the home screen, do one of the following.

- To turn off a pop-up widget, swipe up or down on the app icon. In the upper-right corner of the widget, tap > **Turn off pop-up widget**.
- To turn off all pop-up widgets, tap > . Clear the **Pop-up widgets** checkbox.

Open apps with a gesture

You can use a gesture to open an app from anywhere on your device. The default apps for this feature are BlackBerry Device Search, Google Now™, and the BlackBerry Hub. You can assign different apps to this gesture as well.

1. To open an app, swipe up slowly from the bottom of the screen or from .

2. Slide your finger to the app that you want to open, and then release your finger.

Change the apps that you open with a gesture

You can change the apps that you open with a gesture. You can even set up a gesture to start an action, such as composing an email.

1. Swipe down from the top of the screen once using two fingers, or twice using one finger.
2. Tap ⚙ > **Swipe Shortcuts**.
3. Tap either the left or right circle.
4. Do one of the following:
   - To set the gesture to open a different app, tap **Open app**, and then tap an app.
   - To set the gesture to call a contact, tap **Speed dial**, and then tap a contact.
   - To set the gesture to send an email or a text message to a contact, tap **Send message**. Tap **Email contact** or **Text contact**, and then tap a contact.
   - To set the gesture to start an action, tap **All shortcuts**.

Turn off the gesture to open an app

If you set up a gesture to open an app or use a shortcut, to turn off the gesture, do the following:

1. Swipe down from the top of the screen once using two fingers, or twice using one finger.
2. Tap ⚙ > **Swipe shortcuts**.
3. Tap either the left or right circle.
4. Tap **Clear**.

Personalizing your device

Learn how to personalize your device and make it uniquely yours. For example, you can change your ringtone or set a picture as your wallpaper.

- Customize your device settings
- Change your ringtone
- Set your wallpaper
- Add a contact or number to your speed dial list
- Add an app, a widget, or a shortcut to your home screen
- Change your font size
- Change how you view your recent apps and screens
- Set up a screen lock

Phone and voice

Phone icons

During a call

Icon	Description
	Turn on the speakerphone
	Mute your microphone
	Put a call on hold
	Show the dial pad
	Merge calls to start a conference call
	Split a conference call into multiple calls

Find your own phone number

Open the Phone app.

Your number appears at the top of the screen.

Change your ringtone

1. Swipe down from the top of the screen once using two fingers, or twice using one finger.
2. Tap > **Sound & notification** > **Phone ringtone**.
3. Tap a ringtone and then tap **OK**.

Making calls

Make a call

1. In the Phone app, tap .
2. Enter the number.
3. Tap .

Call a recent number

1. In the Phone app, tap **Recents**.
2. Tap a name or number > **Call back**.

Call a contact

1. In the Phone app, tap **Contacts**.
2. Tap a contact.
3. Tap the number that you want to call.

Tip: To send a text message to a contact, beside the number, tap .

Speed dial a contact

1. In the Phone app, tap **Speed dial**.
2. Tap a speed dial contact.

Show or hide your number on outgoing calls

Depending on your service provider, this feature might not be supported.

1. In the Phone app, in the upper-right corner of the screen, tap .
2. Tap **Settings** > **Call settings** > **Additional settings** > **Caller ID**.
3. Tap **Show number** or **Hide number**.

View your call history

You can view past outgoing, incoming, and missed calls on the History screen.

1. In the Phone app, in the upper-right corner of the screen, tap ⋮ > **Call History**.
2. Do any of the following:
   - To see the details of a specific call, tap a contact or phone number, and then tap **Details**.
   - To view missed calls, tap **Missed**.
   - To clear your call history, tap ⋮ > **Clear call log** > **OK**.

Receiving calls

Answer or dismiss a call

1. If your device is locked, touch and hold .
   - To answer a call, slide your finger until it covers . Release your finger.
   - To dismiss a call, slide your finger until it covers . Release your finger.
2. If your device is unlocked, in the call notification, tap **Answer** or **Dismiss**.

Send a quick response to a caller

You can send a caller a brief text message instead of answering an incoming call. Depending on the recipient of the quick response, additional text messaging charges might apply.

Note: If a call is from an unknown caller, the option to send a quick response does not appear.

1. When you receive an incoming call, touch and hold . Slide your finger until it covers and then release your finger.
2. Do any of the following:
   - To send one of four default messages, tap a message.
   - To compose a new message, tap **Type a reply**.

When you dismiss a call to send a quick response, the caller is sent to voicemail. If you do not have voicemail, the caller receives a busy signal instead.

Change your default quick response messages

You can create your own quick response messages to replace the available defaults.

1. In the Phone app, in the upper-right corner of the screen, tap ⋮.
2. Tap **Settings** > **General settings** > **Quick responses**.
3. Tap the quick response you want to change.
4. Type a new message.
5. Tap **OK**.

To reset to the default quick responses, on the **Edit quick responses** screen, tap ⋮. Then tap **Reset default app**.

Answer or dismiss a call with the slider

By default, you can open the slider to decline an incoming call and send a text message reply to the caller. You can change your settings so that opening the slider answers a call or does nothing instead.

Note: If you choose the **Open to dismiss and reply** option, the caller is forwarded to your voicemail. If you don't have voicemail, the caller receives a busy signal instead. If the call is from an unknown number, opening the slider does nothing.

1. In the Phone app, tap ⋮ > **Settings** > **General settings** > **Slider options for incoming calls**.
2. Choose one of the following:
   - To answer a call when you open the slider, tap **Open to answer**.
   - To dismiss a call and send a text message reply, tap **Open to dismiss and reply**.
   - To make opening the slider do nothing when you receive a call, tap **Do nothing**.

Silence the ringtone when you receive a call

If you receive a call while your sound or vibration notifications are turned on, you can quickly silence your ringtone and stop your device from vibrating. After you silence the ringtone, you can still answer or decline the call.

When you receive an incoming call, press the **Volume up**, **Volume down**, or **Mute** key.

Move a call from your headset to your device

When you have a Bluetooth headset connected to your device, incoming calls are automatically received on your headset. You can manually move the call back to the device.

1. While on a call, tap ✱.
2. Do one of the following:

- To move the call to your device, tap **Handset earpiece**.
- To move the call to your device speakerphone, tap **Speaker**.

Prevent calls from going to your Bluetooth headset

You can disconnect your Bluetooth headset from the Phone app so that calls are sent to your device instead.

1. Swipe down from the top of the screen once using two fingers, or twice using one finger.
2. Tap **Bluetooth**.
3. Beside the paired headset you want to disconnect, tap ⚙ .
4. Clear the **Phone audio** checkbox.

Put a call on hold

While on a call, tap ❚❚ .

To resume a call, tap ❚❚ again.

Blocking calls

Block all incoming or outgoing calls

When you block calls, you can stop all incoming or outgoing calls, and prevent all incoming or all outgoing calls when roaming. Contact your service provider for more info on blocking specific phone numbers. Depending on your service provider, this feature might not be supported.

1. In the Phone app, in the upper-right corner of the screen, tap ⋮.
2. Tap **Settings** > **Call settings** > **Call blocking**.
3. Select any of the checkboxes.

The first time that you turn on call blocking, you are prompted to create a password to lock your call blocking settings. To change your call blocking password, tap **Change call blocking password**.

Send a number straight to voicemail

You can send any incoming calls from a specific contact directly to voicemail by restricting their number.

Verify that the number you want to restrict is listed as a contact in your Contacts app.

1. In the Contacts app, tap the contact you want to block.
2. Tap ✎ > ⋮.
3. Select the **All calls to voicemail** checkbox.

Limit the phone numbers that you can call

When you set up and use fixed dialing numbers, you can make calls and send SMS or MMS messages only to the phone numbers that you added to the fixed dialing numbers list. For example, if you give your device to your child to use, you can limit the phone numbers that your child can call. To use fixed dialing numbers, your service provider must set up your SIM card for this feature. Depending on your service provider, this feature might not be supported.

1. In the Phone app, in the upper-right corner of the screen, tap ⋮.
2. Tap **Settings** > **Call settings** > **Fixed Dialing Numbers**.
3. Tap **Enable FDN**.
4. Enter the SIM security code provided to you by your service provider.
5. Tap **OK**.
6. Tap **FDN list** > ⋮ > **Add contact**.
7. Type a name and phone number.
8. Tap **Save**.

Add a contact or number to your speed dial list

There are two different speed dial lists that you can add contacts or numbers to. You can add contacts or numbers to the BlackBerry Keyboard's speed dial list so that you can dial a number by pressing and holding a single key on your keyboard. By default, your voicemail access number is included in your keyboard's speed dial list. To learn more, see Use a keyboard shortcut.

You can also add contacts to the speed dial list in the Phone app.

1. In the Phone app, tap **Contacts**.
2. Tap a contact.
3. Tap ★.

Remove a contact or number from your speed dial list

1. In the Phone app, tap **Speed dial**.

2. Touch and hold the contact you want to remove.
3. Drag the contact over ✕ **Remove**. Release your finger.

Call waiting and call forwarding

Turn call waiting on or off

Depending on your service provider, this feature might not be supported.

1. In the Phone app, in the upper-right corner of the screen, tap ⋮.
2. Tap **Settings** > **Call settings** > **Additional settings**.
3. Tap the **Call waiting** checkbox.

Set up call forwarding

Depending on your service provider, this feature might not be available.

1. In the Phone app, in the upper-right corner of the screen, tap ⋮.
2. Tap **Settings** > **Call settings** > **Call forwarding**.
3. To change the number that your calls are forwarded to, tap a call forwarding option and type a number.

Start a conference call

1. While on a call, make or answer another call.
2. To merge the calls, tap .

Answer a second call while already on a call

Verify that call waiting is turned on.

1. While you are on a call and receive a second call, touch and hold . Slide your finger until it covers and then release your finger.
2. Do one of the following:
   - To put the first call on hold and answer the second call, tap **Hold current call**.
   - To end the first call and answer the second call, tap **End current call**.

3. If you put the first call on hold, to merge both calls and start a conference call, tap .

To add more people to the conference call, repeat steps 1 and 2.

Make another call while already on a call

When you make another call while you're already on a call, your first call is automatically put on hold.

1. While on a call, tap .
2. Do any of the following:
   - Use the dial pad to enter a number.
   - Tap above the dial pad to go to the Phone screen. Tap a contact.
3. To merge both calls and start a conference call, tap .

To add more people to the conference call, repeat steps 1 to 3.

Remove people from a conference call

1. While in a conference call, to view the conference call participants, tap **Manage conference call**.
2. Do one of the following:
   - To remove a person from the conference call and hang up, tap .
   - To remove a person from the conference call and keep them in a separate call, tap .

Turn on Voice Over LTE

Using Voice Over LTE, you can use your device to make calls with high definition audio quality and fast connections over an LTE network.

Depending on your service provider, this feature might not be supported.

1. Swipe down from the top of the screen once using two fingers, or twice using one finger.
2. Tap > **More** > **Cellular networks** > **IMS settings**.
3. Turn on the **IMS** switch.
4. Turn on the **Voice Over LTE** switch.

Wi-Fi calling

Turn on Wi-Fi calling

Your device can make and receive calls over Wi-Fi networks, even if you have limited or no mobile network coverage.

Depending on your service provider, this feature might not be supported. Contact your service provider for more information.

1. Swipe down from the top of the screen once using two fingers, or twice using one finger.
2. Tap > **More** > **Wi-Fi calling**.
3. Turn on the **Wi-Fi Calling** switch.
4. To see when your device will make Wi-Fi calls, turn on **Wi-Fi Calling Status**.
5. Tap **Wi-Fi calling preferences** > **Connection preferences**.
   - To use a Wi-Fi network, even when you have a cellular signal, tap **Wi-Fi preferred**.
   - To never use a cellular network and only use a Wi-Fi network, tap **Wi-Fi only**.
   - To only use a Wi-Fi network for calls when you don't have a cellular signal, tap **Cellular network preferred**.

Make a Wi-Fi call

Make sure that is at the top of your device's screen.

1. In the Phone app, tap .
2. Enter the number.
3. Tap .

Voicemail

Set up your voicemail

Depending on your service provider, this feature might not be supported. Contact your service provider for more info.

1. In the Phone app, in the upper-right corner of the screen, tap .
2. Tap **Settings** > **Call settings** > **Voicemail**.

3. Tap **Setup**. If the **Voicemail number** field is blank, tap **Voicemail number**, and then enter your voicemail access number. If you don't have a voicemail access number, contact your service provider.
4. Do any of the following:
   - To select a notification profile, tap **Sound**.
   - To set the voicemail notification to vibrate, select the **Vibrate** checkbox.

After you set up your voicemail, to call your voicemail from the Phone app, touch and hold **1**.

Visual Voicemail

Visual Voicemail is another way to access and manage your voicemail. In an app, you can see and scroll through your messages on your device. Some Visual Voicemail services can also transcribe your voicemail messages into text and send messages over email and SMS.

Your service provider might have a Visual Voicemail app preloaded on your device or available for you to download.

Keyboard, language, and typing

BlackBerry Keyboard and typing

Use the BlackBerry Keyboard to communicate with the world. You can type efficiently by creating custom text shortcuts and by using prediction, correction, and spell check. After you set up your keyboard preferences, learn how to cut, copy, and paste text, and delete words. With prediction, you can select word suggestions that appear while you type. You can also set up or change your display, typing, and keyboard languages.

Your device has a touch sensitive slider keyboard and a touch screen keyboard. Both keyboards support finger swipe gestures that allow you to choose word suggestions, edit text, and show the number and symbol list quickly.

Using gestures with the slider keyboard

You can use the slider keyboard to interact with your device without touching your screen. Keeping your finger in contact with the BlackBerry Keyboard at all times can increase your productivity.

To insert the cursor into a block of text, double-tap the slider keyboard. To move the cursor to a specific location in the text field, on the keyboard, slide your finger left, right, up, or down.

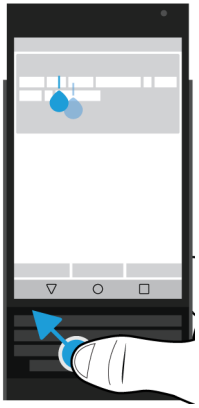

To scroll through a list, such as the message list in the BlackBerry Hub, or the text of a document, on the keyboard, slide your finger up and down.

To turn the pages of an eBook or to scroll up or down in webpages or other documents, rotate your device horizontally and slide your finger along the keyboard.

Show or hide the touch screen keyboard

Do any of the following:

- To show the keyboard, close the slider and tap any text entry field.
- To hide the keyboard, tap the screen outside of a text entry field. If there is nowhere to tap on the screen, tap ◁ .

Typing on the BlackBerry Keyboard

Learn how to use accented and uppercase letters, symbols, and numbers on your keyboards.

Type an uppercase character

To type an uppercase character, do one of the following:

- On the touch screen keyboard or slider keyboard, press ⇧ , and then tap a letter.
- Press and hold the letter.

To turn on CAP lock, press and hold ⇧ .

Type numbers and symbols

1. On the touch screen keyboard or slider keyboard, swipe down to open the number and symbol picker. Swipe down again to scroll to the next page of numbers and symbols.
2. Tap a number or symbol on the screen, or press the key on the slider keyboard that corresponds to the symbol that you want.

Type an accented character

The list of available accents depends on the current input language. If you set multiple input languages, the accents for the same language family that can be predicted appear together for a letter. For example, if you have set more than one language with a Latin-based alphabet, you see accent options for all Latin-based languages that you have set.

On the touch screen keyboard or the slider keyboard, press and hold the letter that you want to add the accent to, and then do one of the following:

- When accented characters appear on the screen above the slider keyboard, tap the character that you want to insert.
- When accented characters appear above the letter on the touch screen keyboard, slide your finger onto the accented character that you want to insert, and then lift your finger.

Change the settings for keyboard, input, or typing

You can personalize your typing experience by changing the BlackBerry Keyboard, input, or typing settings on your device.

1. Swipe down from the top of the screen once using two fingers, or twice using one finger.
2. Tap ⚙ > **Language & input**.

Type more accurately with prediction and correction settings

You can change the BlackBerry Keyboard settings so that your device automatically predicts what you are likely to type and corrects typing errors. The keyboard can also capitalize new sentences or insert a period when you press the space key twice.

1. Swipe down from the top of the screen once using two fingers, or twice using one finger.
2. Tap ⚙ > **Language & input** > **BlackBerry Keyboard Settings** > **Prediction and correction**.
3. Tap the settings that you want to change.

Type faster with key press feedback settings

You can change your typing settings to help you type faster and more accurately on your BlackBerry Keyboard. Your device can be set to vibrate and make a sound when you tap keys on the touch screen keyboard.

1. Swipe down from the top of the screen once using two fingers, or twice using one finger.
2. Tap ⚙ > **Language & input** > **BlackBerry Keyboard Settings** > **Key press feedback**.
3. Tap the settings that you want to change.

Select text using the BlackBerry Keyboard

1. Highlight the text that you want to select:
   - On the screen, touch and hold a word.
   - On the screen, when you edit text, tap the text to insert the cursor handle.
   - On the slider keyboard, when you edit text, double-tap the keyboard to insert the cursor handle.
2. To expand the text selection, do one of the following:
   - On a highlighted word, drag a cursor handle until your entire selection is highlighted.

- Move the cursor handle to the beginning of the text that you want to select. Touch and hold , and then drag the cursor handle to highlight your selection.

To dismiss the selection, tap anywhere on the screen.

Cut, copy, and paste text

1. Select the text that you want to cut or copy.
2. Lift your finger off the screen or slider keyboard.
3. Do one of the following:
   - To copy the text, tap .
   - To cut the text, tap .

To paste the text, touch and hold the location where you want to paste the text, and then tap **Paste**.

Delete text using the BlackBerry Keyboard

On the slider keyboard or the touch screen keyboard, swipe from right to left to delete a word. If you are typing in a right-to-left language, swipe from left to right to delete a word.

Use emojis

1. Do one of the following:
   - When you type on the slider keyboard, press and hold > tap .

- When you type on the touch screen keyboard, press and hold the **Period** key > tap ☺ .

2. Do any of the following:
   - Tap the icons under the emojis to switch the emoji category.
   - Swipe left on the emoji list to see more emojis.
3. Tap an emoji.

On the touch screen keyboard, tap ABC to return to the keyboard view.

Type using voice dictation

You can use voice dictation to type hands-free instead of using your keyboard.

Do one of the following:

- When you type on the slider keyboard, press 🎙 .
- When you type on the touch screen keyboard, press and hold the **Comma** key.

To close voice dictation, tap ◁ .

Selecting word suggestions that appear while you type

Your device is designed to learn what you tend to say and where in a sentence you tend to say it. Your device uses this information to try to predict what word you might type next. Suggested words appear on the letters of the touch screen keyboard or on the row of screen keys above the slider keyboard. You can quickly select a suggested word by placing your finger on either keyboard under the word and flicking it up toward the screen.

Select a suggested word

To use a word that appears above the slider keyboard or on the touch screen keyboard, place your finger on the keyboard below the word, and flick it up toward the screen.

Spell check

The BlackBerry Keyboard includes a spell check feature. Third-party spell checkers can be installed and used with the keyboard, but for best results, use the BlackBerry Spell Checker.

Turn on spell check

1. Swipe down from the top of the screen once using two fingers, or twice using one finger.
2. Tap ⚙ > **Language & input** > **Spell checker**.
3. Set the **Spell checker** switch to **On**.
4. Select the **BlackBerry Spell Checker**.

Change spell check settings

You can change spell check settings, such as whether the spell checker can look in your contact list for name corrections.

1. Swipe down from the top of the screen once using two fingers, or twice using one finger.
2. Tap ⚙ > **Language & input** > **Spell checker**.
3. Tap ⚙ beside the **BlackBerry Spell Checker**.

Accept spelling suggestions

If spell check is turned on, spelling mistakes are underlined as you type.

Tap an underlined word.

- To accept a spelling suggestion, tap the suggested word.
- To add the word to your personal dictionary, tap **Add to dictionary**.

Edit your personal dictionary

When you use the spell check feature, you can add words that are marked as incorrect to a custom dictionary on your device so that spell check recognizes them as being correct. The words that you add to your personal dictionary can be edited at any time.

1. Swipe down from the top of the screen once using two fingers, or twice using one finger.
2. Tap ⚙ > **Language & input** > **BlackBerry Keyboard Settings** > **Prediction and correction** > **Personal dictionary**.
3. Tap a language. To apply the setting to all languages, tap **For all languages**.
4. Do any of the following:
   - To add a new word to your personal dictionary, tap +, and then add the new word. When you are finished, tap ◁.
   - To edit a word that's already in your personal dictionary, tap the word.
   - To delete a word from your personal dictionary, tap the word, and then tap 🗑.

Edit the restricted word list

The words in the restricted list are never used to correct your typing.

1. Swipe down from the top of the screen once using two fingers, or twice using one finger.
2. Tap ⚙ > **Language & input** > **BlackBerry Keyboard Settings** > **Prediction and correction** > **Restricted words**.
3. Do any of the following:
   - To add a new word to the restricted list, tap +, and then add the new word. When you are finished, tap **Ok**.
   - To delete a word from the restricted list, tap and hold the word, and then tap **Delete**.

Creating custom text shortcuts

The word substitution feature lets you create your own text shortcuts. When you set up a shortcut, your device replaces the shortcut with a word or phrase.

Note: Word substitution is also known as autotext.

Add a new text shortcut

1. Swipe down from the top of the screen once using two fingers, or twice using one finger.
2. Tap ⚙ > **Language & input** > **BlackBerry Keyboard Settings** > **Prediction and correction** > **Word substitution**.
3. Tap a language for your shortcut or, if you want the shortcut to be available in every installed language, tap **For all languages**.
4. Tap +.
5. In the **Shortcut** field, type the shortcut phrase. For example, bb.
6. In the **Target** field, type the substitution text for the shortcut. For example, BlackBerry.
7. Tap ◁ twice.

If you add bb as your shortcut, and BlackBerry as the target, when you type bb, BlackBerry is inserted into your text.

Change or delete a text shortcut

1. Swipe down from the top of the screen once using two fingers, or twice using one finger.
2. Tap ⚙ > **Language & input** > **BlackBerry Keyboard Settings** > **Prediction and correction** > **Word substitution**.
3. Tap the language where your text shortcut appears.
4. Tap an item in the Substitution List.
5. Do one of the following:
   - Update the **Shortcut** text or **Target** output.
   - To delete the shortcut, tap 🗑.

Language

If you speak more than one language, you can use the language settings to change your display, typing, voice input, or BlackBerry Keyboard language. You can also switch to another typing language while you type.

Switch your input language

If you turn on more than one input language on your device, you can switch between input languages while you type.

Note: If the input language that you want to use isn't listed, you might have to install a keyboard for that input language from the Google Play™ store.

1. To turn on input languages, swipe down from the top of the screen once using two fingers, or twice using one finger.

2. Tap ⚙ > **Language & input** > **Keyboard settings** > **Input languages**.
3. If the **Use system language** switch is turned on, turn it off. Turn on the switch beside each input language that you want to use.
4. To switch between input languages, while you type, tap ⌨. Tap an input language.

Change your display language

The language that you selected during the initial setup of your device is your display language. The home screen, BlackBerry Hub, and supported applications display content in this language.

1. Swipe down from the top of the screen once using two fingers, or twice using one finger.
2. Tap ⚙ > **Language & input** > **Language**.
3. Tap a language.

Keyboard input methods

An input method allows you to type words or characters that are not available using the characters on your keyboard layout. In some cases, input methods give you a phonetic approximation of a word based on the keyboard layout you are using. Your device can then suggest a character or diacritic based on the sound you choose.

In other cases, input methods provide you with gestures and key combinations for languages. Some keyboard input methods are common to all supported languages, such as word prediction or selecting accented characters by pressing and holding keys.

Both the touch screen keyboard and the slider keyboard support input methods. The keys on the touch screen keyboard display the language's special characters. The physical keys on the slider keyboard map to special characters, so if you press a latin alphabet key, a corresponding character appears.

If the input method for the language you want is not available on your device, check Google Play™ for additional input methods to download.

Show the touch screen keyboard when the slider is open

You can keep the touch screen keyboard open while you are typing on the slider keyboard. This setting allows you to switch between keyboards easily and shows you the character key map for the physical slider keyboard when you are typing in another language.

1. Swipe down from the top of the screen once using two fingers, or twice using one finger.
2. Tap ⚙ > **Language & input** > **Current Keyboard**.
3. Turn on the **Hardware** switch.

Turn on Chinese and Japanese input methods

By default, Google™ Pinyin Input, Google™ Zhuyin Input, and Google™ Japanese Input are available on your device. Check Google Play™ for other Chinese and Japanese input methods.

1. Swipe down from the top of the screen once using two fingers, or twice using one finger.
2. Tap ⚙ > **Language & input** > **Current Keyboard** > **Choose Keyboards**.
3. Turn on the **Google Pinyin Input**, **Google Zhuyin Input**, or **Google Japanese Input** switches.

Chinese and Japanese input methods are now available in the **Language & input** > **Current Keyboard** keyboard selector.

Typing in Arabic

The Arabic language has more characters in the alphabet than there are keys on the keyboard. As a result, more than one character appears on one key. There may be alternate letters that are related to a primary letter or that have a similar form. You can press and hold a letter or press the key again to access the second and third characters.

The Arabic keyboard layout supports word prediction and the flick feature, which allows you to flick word suggestions up onto the screen (if you have this feature turned on)

To access emojis and voice dictation on the touch screen keyboard, press and hold the **Comma** key.

The following image shows the slider keyboard in Arabic:

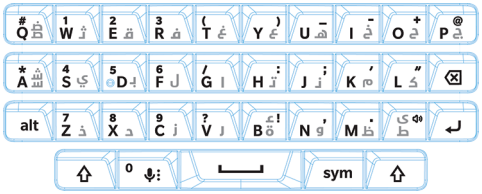

Typing in Greek

The Greek keyboard supports word prediction and the flick feature, which allows you to flick word suggestions up onto the screen (if you have this feature turned on). The Greek keyboard also allows you to type alternate characters two different ways. You can press ⇧, and then press a letter, or you can press and hold the primary character and then select the alternate character from the options.

The following image shows the slider keyboard in Greek:

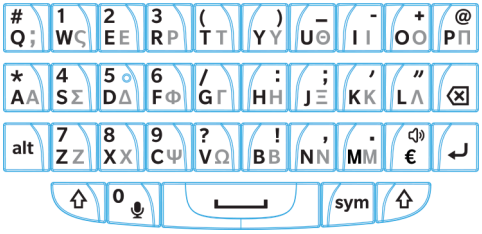

Typing in Russian

The Russian keyboard and language supports word prediction and the flick feature, which allows you to flick word suggestions up onto the screen (if you have this feature turned on).

To access more Cyrillic characters on the Russian keyboard layout, you can use one of the following methods:

- To type an uppercase character, you can press ⇧, and then press a letter.
- Alternate characters are available for A, I, L, N, and Z. To type an alternate character, you can double-press the primary character.
- To type an accented version of a character, you can press and hold the primary character, and then select the accented character.

The following image shows the slider keyboard in Russian:

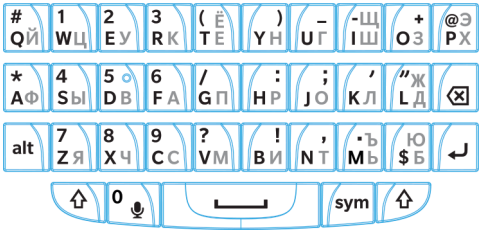

Typing in Hebrew

The Hebrew keyboard supports word prediction and the flick feature, which allows you to flick word suggestions up onto the screen (if you have this feature turned on). The Hebrew keyboard also allows you to type alternate characters two different ways. You can press ⇧, and then press a letter, or you can press and hold the primary character and then select the alternate character from the options.

The following image shows the slider keyboard in Hebrew::

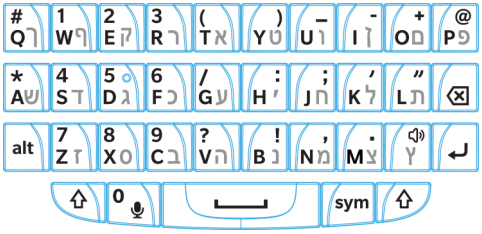
alt
sym

Applications and features

Find help for apps

You can learn about apps, such as BlackBerry Hub, Calendar, BlackBerry Camera, DTEK by BlackBerry, and more, at www.help.blackberry.com.

Organizing your home screen

Move an app, a widget, or a shortcut around

1. Touch and hold an an app, a widget, or a shortcut, and then drag it to a new spot.
2. Release your finger.

Move an app or a shortcut to the favorites tray

The favorites tray appears at the bottom of each home screen, giving you easy access to your favorite apps or shortcuts. You can add up to four apps or shortcuts to the favorites tray.

1. If the favorites tray is full, touch and hold one of the apps or shortcuts in the tray. Drag it to a spot on the home screen.
2. Touch and hold the app or shortcut that you want to add, and then drag it to the favorites tray.

Add a home screen

You can add as many home screens as you want to organize your apps, widgets, and shortcuts.

1. On the home screen, touch and hold the item that you want to move, and then drag it to the right edge of the screen.
2. Hold the item at the right edge of the screen until the next home screen appears. If necessary, continue to hold the item until a blank home screen appears.
3. Release your finger.

Tip: To view different home screens quickly, tap the circles that appear above the favorites tray, and then slide your finger left or right.

Organize apps and shortcuts into folders

1. On the home screen, touch and hold an app or a shortcut.
2. Drag the app or shortcut on top of another app or shortcut that you want to include in the same folder.
3. To name the folder, tap the folder. Tap **New folder**, and then enter a name.

Change how you view your recent apps and screens

When you tap ☐, you see a tiled view, a masonry view, or a rolodex view of your recent apps and screens. You can change the view to suit your preferences.

1. Swipe down from the top of the screen once using two fingers, or twice using one finger.
2. Tap ⚙ > **Display** > **Recents**.
3. Select a view.
4. Tap **Done**.

Uninstall an app or remove an app, a widget, or a shortcut from a home screen

If you uninstall an app, the app is no longer available on your device. You must reinstall the app if you want to use it. Some built-in apps can't be uninstalled; instead, you can turn off these apps so that they no longer appear in ⠿ and so that you no longer receive notifications for them.

If you remove an app from the home screen, the app is still installed on your device, and you can open the app from ⠿.

1. Touch and hold an app, a widget, or a shortcut.
2. Drag the app, widget, or shortcut toward the top of the screen.
   - To uninstall an app, drag the app toward **Uninstall**.
   - To turn off an app, drag the app toward **Disable**.
   - To remove an app, a widget, or a shortcut from the home screen, drag the app toward **Remove**.

You can use the Google Play™ store to reinstall apps that you uninstall. In the Google Play™ store, tap ≡ > **My apps** > **All**.

You can turn on apps that you turned off in ⚙ > **Apps**. At the top of the screen, swipe left on the categories until you see the **Disabled** category. Tap an app, and then tap **Enable**.

Clock

Setting the alarm clock

Set an alarm

1. In the Clock app, tap .
   - To set an existing alarm, tap the time shown on the alarm.
   - To create a new alarm, tap .
2. To adjust the alarm time, tap the hour or minute. Touch and hold the pink dial, and then slide the dial to your desired time.
3. Tap **AM** or **PM**.
4. Tap **OK**.

Create or delete an alarm

In the Clock app, do one of the following:

- To create an alarm, tap > .
- To delete an alarm, under the alarm that you want to delete, tap > .

Tip: You can add labels to your alarms to help you remember what each alarm is for.

Change your alarm ringtone

1. In the Clock app, tap .
2. Under the alarm you want to change, tap > .
3. Select a ringtone.
4. Tap **OK**.

Set an alarm for multiple days

1. In the Clock app, tap .
2. Under an alarm, tap .

3. Select the **Repeat** checkbox.
   Days that the alarm is set to go off are indicated by a letter inside a white circle.
4. To add or remove a day, tap its letter.

Set the snooze length

By default, the alarm snoozes for ten minutes.

1. In the Clock app, tap ⋮ > **Settings** > **Snooze length**.
2. Slide your finger up or down over the numbers.
3. When the number you want appears between the blue lines, tap **OK**.

Set the silence time

By default, the alarm is silenced after ten minutes.

1. In the Clock app, tap ⋮ > **Settings**.
2. Tap **Silence after**.
3. Tap a time.
4. Tap **OK**.

Use the stopwatch

1. In the Clock app, tap ⏱ .
2. Tap the stopwatch.
   - To stop the stopwatch, tap the stopwatch again.
   - To restart the stopwatch after it's been stopped, tap the stopwatch again.
   - To add a lap, tap ↻ .
   - To reset the stopwatch, tap ↺ .

Set the timer

1. In the Clock app, tap ⧗ .
2. Enter the time in hours, minutes, and seconds. For example, if you want to sent an hour-long timer, type **1 00 00**.
3. To start the timer, tap ▶ .

You can do more than just set your timer:

- To add an extra minute to your running timer, tap **+1'** .
- To set another timer, tap .
- To reset a timer, tap , and then tap .
- To delete a timer, tap .

Set your home time zone

1. In the Clock app, tap .
2. Tap **Home time zone**.
3. Tap a time zone.

Tip: If you would like the clock to update automatically to your current location's time zone when you're traveling, select the **Automatic home clock** checkbox.

View the time for other locations

You can view the time for multiple locations on the clock screen.

1. In the Clock app, tap .
2. Tap .
3. Tap the locations that you want to appear on your clock screen.
4. Tap .

Remove a location from the clock screen

1. In the Clock app, tap .
2. Clear the checkbox next to the location that you want to remove.
3. Tap .

Switch to night mode

You can dim your screen and keep the time displayed like a bedside clock by switching to night mode.

In the Clock app, do one of the following:

- Tap > **Night mode**.
- Touch and hold anywhere on the clock screen.

Change the clock style

To view the clock in either digital or analog format, in the Clock app, tap ⋮ > **Style** > **Analog** or **Digital**.

Hangouts

Chat using Hangouts™

Use private and group hangouts to stay connected with your friends and family through pictures, live chats, and video or voice calling.

To use the Hangouts™ app, you must be signed into a Google™ account. Depending on your service provider, this feature might not be supported.

1. On the home screen, tap ⠿ > **Hangouts**.
2. Do any of the following:
   - To start a new hangout, tap 👤, and then tap a contact.
   - To view your hangouts, tap 💬, and then tap a hangout to open it.
   - To start a video or phone chat, in a hangout, tap 📹 or 📞.
   - To manage your account or change your settings, tap ☰.

Note: To learn more, tap ☰ > **Help & feedback**.

Search

Search your device

You can change your settings to narrow your search to include only specific categories. By default, the option to extend your search to include Internet sources and other application data is turned on. To narrow your results even further, you can turn off this option.

Note: The BlackBerry Device Search app searches email messages that are in the BlackBerry Hub.

1. On a home screen, tap ⠿ > .
2. Type a search term or an Instant Actions command.

Tip: Depending on your shortcut settings, you can also begin a search when you press the **S** key on the keyboard.

Open apps with a gesture

Use Instant Actions

Instant Actions are shortcuts that allow you to perform tasks quickly.Type a command in the search field, and the app or item associated with the command is shown in your results.

Make a call

You can call a contact or dial a phone number right from the search field.

In the search field, type **phone**, **dial**, or **call**, followed by a contact name or phone number.

Send an email

In the search field, type **email** or **mail**, followed by a contact name and a message.

Send a text message

In the search field, type one of the following, followed by a contact name or phone number and a message: **sms**, **message**, **msg**, or **text**.

Play music

In the search field, type **play** followed by a song name, artist name, or album name.

Get directions

In the search field, type **map** followed by the name of a business or address.

Create a note

In the search field, type **note** or **memo** followed by a title for the note.

Create a task

In the search field, type **task** or **todo** followed by a title.

Change your search settings

If you know the type of file that you're looking for or the category that you want to search, you can specify which categories to include in searches. For example, if you are looking for a song, you can clear all categories except Music.

1. In the BlackBerry Device Search app, tap ⋮ > **Settings** > **Search categories**.
2. To choose which categories to include in searches, select or clear the checkboxes.
3. Tap **OK**.

Tip: The Extended Search category searches Internet results, cloud apps such as Google Drive™, Google Play™, other apps on your device, and more.

Do more with your search results

There are a variety of actions you can perform with items in your search results right in the search results screen. The actions available to you depend on the type of item. For example, if one of the search results is an app, you can open the app directly from the search results screen.

1. Press and hold a search result.
2. If necessary, tap an action.

Stop saving your search history

By default, your device keeps the last 20 search results that you visit for quick reference and reuse. If you don't want to save your usage history, you can turn off this feature.

1. In the BlackBerry Device Search app, tap ⋮ > **Settings**.
2. Turn off the **Save search history** switch.

Tip: To delete an individual search result, swipe left or right on the result. To clear all of your search history permanently, tap **Clear search history** and then tap **OK**.

Location services and Google Maps

About location services

You can turn on location services so that location-based applications and services, like Google Maps™, can find your location. Location-based applications can use GPS technology and other positioning information to provide you with information, such as driving directions.

Turn location services on or off

1. Swipe down from the top of the screen once using two fingers, or twice using one finger.
2. Tap ⚙ > **Location**.
3. Turn the switch on or off.

Change location modes

With location modes, you can set how accurately your device detects your location. You can choose from the following location modes:

- **High accuracy**: Uses GPS, Wi-Fi networks, mobile networks, and Google™ location services to find your location accurately.
- **Battery saving**: Uses Wi-Fi networks, mobile networks, and Google™ location services to find your location, while conserving your battery life.
- **Device only**: Uses GPS only to find your location. This mode might use more battery life than battery saving mode, and might not be as fast as high accuracy mode.

You can also turn on accelerated location, which uses Qualcomm IZat hardware to find your location accurately, even when you're inside a building.

1. Swipe down from the top of the screen once using two fingers, or twice using one finger.
2. Tap ⚙ > **Location** > **Mode**.
3. Tap an option.
4. To turn on accelerated location, tap the **Accelerated location** switch.

Turn Location History on or off

Location History is a Google™ service that creates a private map of where you go with your device, and uses the map to give you useful information, such as commute predictions and more relevant search results.

1. Swipe down from the top of the screen once using two fingers, or twice using one finger.
2. Tap ⚙ > **Location** > **Google Location History**.
3. If necessary, add your Google™ account.
4. Tap the switch to turn Location History on or off.

About Google Maps™

Google Maps™ helps you to find businesses, restaurants, and other places of interest, and can provide you with turn-by-turn directions to your destination.

Find help for Google Maps™

In Google Maps™, tap ≡ > **Help**.

Keyboard shortcuts

Use a keyboard shortcut

From the home screen, the physical keyboard keys double as shortcut keys. You can set up a key to open an app, compose an email, speed dial a contact, and more. You can use both short-press shortcuts and long-press shortcuts on the physical keyboard.

If you install a home screen other than the BlackBerry Launcher, you can't use keyboard shortcuts.

1. Slide open the physical keyboard.
2. With the home screen showing, do one of the following.
   - Press a key that has a short-press shortcut assigned to it.
   - Press and hold a key that has a long-press shortcut assigned to it.

Tip: To see what shortcuts are assigned to each key, tap ⋯ > ⚙ > **Keyboard shortcuts**.

Preloaded keyboard shortcuts

Some keys already have short-press shortcuts assigned to them. You can use these shortcuts from the home screen.

Key	Shortcut
A	Open the Contacts app
B	Open a browser
C	Compose an email
D	Add a note in the Notes app
H	Open the Help app
K	Lock the device screen
L	Open a calendar app to the current day
M	Open the BlackBerry Hub
N	Open BBM
O	Open the device settings
P	Open the call history
S	Open a search app
T	Add a task in the Tasks app
U	Open the Calculator
W	Call voicemail

Customize your keyboard shortcuts

You can change the shortcut assigned to a key or add a shortcut to a key.

1. On the home screen, tap > > **Keyboard shortcuts**.
2. Tap **Short press** or **Long press**.
3. Tap a letter. If necessary, tap **Edit shortcut**.
   - To set a shortcut to open an app, tap **Open app**.
   - To set a shortcut to call a contact, tap **Speed dial**.
   - To set a shortcut to send an email or a text message to a contact, tap **Send message**.
   - To set a different shortcut, tap **All shortcuts**.

Tip: You can also assign a shortcut to an unassigned key by pressing the key while the home screen is showing.

Turn off short-press keyboard shortcuts

By default, when you type on the physical keyboard from the home screen, your device uses short-press keyboard shortcuts. You can change your settings so that typing on the physical keyboard either does nothing or starts a search in the BlackBerry Device Search app.

1. On the home screen, tap > > **Typing action**.
2. Tap **Do nothing** or **Start a search**.

Scroll with keyboard shortcuts

In some apps, you can use shortcuts on the physical keyboard to scroll through lists (such as your messages in the BlackBerry Hub), email, or documents.

In an app, do any of the following:

- To go to the bottom of a screen, press **B**.
- To go to the top of a screen, press **T**.
- To scroll down on a screen, press the **Space** key.

Note: These shortcuts aren't available in all apps.

Google Chrome and Downloads

Find help for Google Chrome™

In Google Chrome™, tap > **Help & feedback**.

Downloads

You can use the Downloads app to manage files that you download from email, BBM messages, hangouts, Google Chrome™, and more. Streamed music and videos don't appear in the Downloads app.

Downloads icons

Icon	Description
	Delete a downloaded file
	Share a downloaded file
	View downloads as a list or as thumbnails
	Sort files by name, date, or file size

Printing

Print from your device

You can print webpages, photos, documents, and more from your device using compatible Wi-Fi or Bluetooth enabled printers and printers connected to your computer.

1. In an app, tap > **Print**.
2. Tap the top of the screen, and then tap the printer that you want to use.
3. Tap .

Note: You may have to install a printing service and add a printer before you can print.

Install a printing service

1. Do one of the following:
   - Swipe down from the top of the screen once using two fingers, or twice using one finger. Tap > **Printing**.
   - In the app that you want to print from, tap > **Print**. Tap the top of the screen, and then tap **All printers...**.
2. Tap > **Add service**.
3. Tap the service that's compatible with your printer, and then tap **Install**. To find a compatible service, find your wireless printer's brand or consult its user guide.
4. Tap twice.
5. Tap the printer service that you just installed. If the service isn't listed, swipe down from the top of your screen, and then tap the notification for your newly installed printer service.

6. Turn on the switch for that service, and then tap **OK**. Wait for the service to find printers automatically.

Tip: Some printer services allow you to add printers manually. Tap ⋮ > **Add printer**, and then follow the service's instructions.

Add a printer

In most cases, after you install a printer service, your device finds your printer automatically. If your device can't find your printer, you might be able to add it manually.

1. Do one of the following:
   - Swipe down from the top of the screen once using two fingers, or twice using one finger. Tap ⚙ > **Printing**.
   - In the app that you want to print from, tap ⋮ > **Print**. Tap the top of the screen, and then tap **All printers**.
2. Tap the printer service that you want to use. If the printer service is turned off, turn it on.
3. Tap ⋮ > **Add printer**.
4. Follow the instructions on the screen.

Printing using Google Cloud Print™

You can use Google Cloud Print™ to print from your device to a Cloud Ready printer or to any printer that's connected to a computer.

To print to a printer that's not Cloud Ready, you must also do the following:

- Make sure that Google Chrome™ is installed on your computer, and then log in to the same Google™ account that you use on your device.
- When you print, make sure that your computer is turned on.

To learn more about setting up and using Google Cloud Print™, see https://support.google.com/cloudprint/.

Settings

Customize your device settings

1. Swipe down from the top of the screen once using two fingers, or twice using one finger.

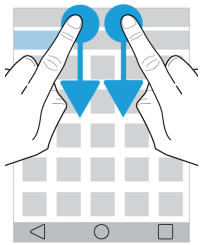

   The Quick Settings menu is displayed to let you access options and settings you might want to interact with regularly, such as Auto-rotate or your network connections.
2. Tap ⚙ .
3. Tap the item that you want to customize.

Overview of Quick Settings

You can use Quick Settings to access items that you use frequently, such as screen rotation or Wi-Fi settings. To open Quick Settings, swipe down from the top of the screen once using two fingers, or twice using one finger.

Item	Description
Screen Brightness	• Adjust the screen brightness.
Wi-Fi	• Connect to Wi-Fi networks.
Bluetooth	• Connect to Bluetooth enabled devices.

Item	Description
Invert colors	• Switch between black text on a white background and white text on a black background.
Mobile network icon	• View your service provider name and connection status. • Quickly access your data usage information.
Airplane Mode	• Turn all wireless connections on or off.
Auto-rotate	• When displayed, your screen rotates automatically between portrait and landscape mode when you turn your device.
Portrait	• When displayed, your screen remains in portrait mode even when you rotate your device.
Flashlight	• Turn the flashlight on or off.
Location	• Turn location services on or off.
Cast screen	• Set up devices to share your screen wirelessly on an external display.
Battery saver	• Turn Battery saver mode on or off.

Overview of device settings

Item	Description
Wi-Fi	• Set up connections to Wi-Fi networks.

Item	Description
Bluetooth	• Set up connections to Bluetooth enabled devices.
Data usage	• See your data usage stats. • Adjust or access mobile data settings. • Receive a notification when you reach specified data limits.
More	• Customize your device settings for Airplane mode, NFC (if supported), mobile hotspots, and more.
Display	• Adjust the screen brightness and color balance. • Set your wallpaper. • Set the length of time before your device goes to sleep and what the wake-up gestures do. • Choose how your open apps are displayed. • Change your font size. • Customize your rotation settings. • Set options for sharing your device screen with external devices. • Set plug-in actions.
Swipe shortcuts	• Assign shortcuts to specific gestures.
Sound & notification	• Change ringtones and notification sounds. • Adjust media and notification volume. • Prioritize or block notifications. • Customize audio and visual notifications for specific apps.
Storage	• View available storage space on your device and media card. • Set up access to the files stored on your device, including USB connections. • Format your media card and delete data from your media card.
Battery	• Turn Battery saver mode on or off. • Customize settings such as screen brightness and display to help extend battery life. • View your usage details by date and time.

Item	Description
Apps	• Monitor apps that are using your device memory. • View and sort all apps on your device. • Select the location for installing apps.
Users	• Add individual user profiles to your device. • Customize the settings for user and guest profiles. • Switch between user profiles.
Tap & pay (if available)	• Add a payment app and choose which app is the default for payments. • Use NFC technology at payment terminals to pay for your purchases.
Advanced interactions	• Turn specific gestures on or off that allow you to perform simple tasks more quickly.
Location	• Choose whether apps can use your location information. • Clear recent location requests that you entered in map apps. • Choose different modes to identify your location.
Security	• Set up options for screen locking. • Add a message or owner info to your lock screen. • Encrypt your device data. • Set up your device to use a smart card. • Change permissions for installing apps and device administrators. • Install and clear certificates. • Turn screen pinning on or off.
Accounts	• Add or change email accounts. • Turn the option to sync your accounts automatically on or off.
Language & input	• Change the language your device uses. • Customize settings for spell checker and add words to your personal dictionary. • Change keyboard types and keyboard settings. • Set different voice and text-to-speech options.
Backup & reset	• Turn the option to back up data to the cloud on or off.

Item	Description
	• Set up cloud accounts for backing up your data. • Turn the option to restore your data automatically on or off. • Delete your device data.
Diagnostics	• Turn the option to share diagnostic and usage data on or off.
Date & time	• Change the time zone, time, and date.
Accessibility	• Customize settings, such as magnification, large text, spoken passwords, and more. • Set up Google™ Talkback. • Change text-to-speech output options. • Turn color inversion and correction options on or off.
Printing	• Add mobile printing apps. • Preview and print the content of certain screens.
About phone	• Find general information about your device, such as hardware information, network details, and battery level. • Identify your software version and model. • Check for system updates.

Notifications

Manage your notifications

Notifications let you know about new messages, calendar entries, app updates, and more. When you receive a notification, an indicator appears in the upper-left corner of the screen.

Check and open your latest notifications

1. Swipe down from the top of the screen with one finger.
2. If necessary, pull down to see more notifications.

3. Tap a notification to open it.

Peek at a notification

In the upper-left corner of the screen, touch and hold the notification.

Block or prioritize a notification

1. Open a notification.
2. Touch and hold the notification.
3. Tap ⓘ.
4. Turn on the **Block** or **Priority** switch.

Dismiss a notification

1. Swipe down from the top of the screen with one finger.
2. Swipe left or right on a notification.

Note: To dismiss all of your notifications at once, tap **Clear All**.

Filter your notifications

You can sort a list of notifications to see notifications associated with a particular app only.

1. Swipe down from the top of the screen with one finger.
2. Tap an app icon, such as BBM, BlackBerry Help, or Phone.

To exit the filtered view and return to the full notifications list, tap the app icon again.

Change the volume of your notifications

You can quickly access the volume sliders for notifications, media, and alarms when you press the Volume down key. You can also customize the volume from the device settings screen.

1. Swipe down from the top of the screen once using two fingers, or twice using one finger.
2. Tap ⚙ > **Sound & notification**.
3. Move any of the sliders to the right or left.

Change your notification sounds

You can change the default sound that your device makes when you receive a notification, or you can turn off notification sounds completely.

1. Swipe down from the top of the screen once using two fingers, or twice using one finger.
2. Tap ⚙ > **Sound and notification** > **Default notification ringtone**.
3. Do one of the following:
   - To change the default sound, tap a ringtone.
   - To turn off notification sounds, tap **None**.
4. Tap **OK**.

To turn sounds on or off for features such as screen locking or the dial pad, tap **Other sounds**. Turn any of the switches on or off.

Change your Interruptions settings

When you turn on Priority mode, you can set your device to allow priority interruptions only, so you can stay focused on the task at hand. You can set your device to interrupt you only at certain times, for certain types of notifications, or when you receive notifications from specific people. You can also turn off all interruptions.

1. Swipe down from the top of the screen once using two fingers, or twice using one finger.
2. Tap ⚙ > **Sound and notification** > **Interruptions**.
3. Do any of the following:
   - To choose if you are interrupted when you receive a new notification, tap **When calls and notifications arrive**. Tap **Always interrupt**, **Allow only priority interruptions**, or **Don't interrupt**.
   - To set priority interruptions, turn on the **Events and reminders**, **Calls**, or **Messages** switches.
   - If you turn on the switches for priority calls or messages, to specify whose calls and messages you allow interruptions from, tap **Calls/messages from**. Tap an option.
   - To choose when you allow exceptions for sound notifications, under Downtime, tap **Days**. Tap a day or days and tap **DONE**. Set your start and end times.
   - To choose the types of interruptions allowed, tap **Interruptions allowed**. Tap **Priority only** or **None**.

Note: Alarms are always set as priority interruptions. However, if you choose **Don't interrupt** or **None**, alarms do not make a sound.

Turn off all sounds and notifications except calls

1. Swipe down from the top of the screen once using two fingers, or twice using one finger.
2. Tap ⚙ > **Sound & notification** > **Interruptions**.
3. Tap **When calls and notifications arrive** > **Allow only priority interruptions**.
4. Tap a length of time, and then tap **OK**.
5. Under **Priority Interruptions**, turn on the **Calls** switch, and then turn off all other switches.

Tip: You can also adjust your notifications when you press the **Volume down** key and tap **Do Not Disturb**, **Priority**, or **Normal**.

Turn off all alerts

You can silence your device temporarily or indefinitely.

1. From the home screen, press the **Volume down** key on the side of your device.
2. If necessary, tap **Notifications**.
3. Tap **Do Not Disturb**, and then tap an option.

Customize notifications for an app

You can edit the notification settings for individual apps such as your email accounts, BBM, and more.

1. Swipe down from the top of the screen once using two fingers, or twice using one finger.
2. Tap ⚙ > **Sound and notification** > **App notifications**.
3. Tap an app.
4. Do one of the following:
   - To ignore notifications from the app, turn on the **Block** switch.
   - To see notifications from the app at the top of your notifications list, and to receive priority notification interruptions, turn on the **Priority** switch.
   - If available, to set a custom LED color for the app, turn on the **Customize LED Color** switch. Tap **LED Color** and then tap a color.
   - To set the number of times your device vibrates when you receive a notification from the app, turn on the **Customize Vibrations** switch. Tap **Number of Vibrations** and then tap a number.
   - To allow notifications from an app to appear on the lock screen, but to keep the notification contents hidden, turn on the **Sensitive** switch. (To see this switch, a screen lock option, such as a password, must be set.)

You can grant some apps access to your notifications. To see these apps, or to turn access on and off, tap ⚙ > **Sound & notification** > **Notification access**. Tap an app. Select or clear the checkbox.

Customize lock screen notifications

You can customize options so that only the notifications you want to see show up on the screen when your device is locked.

Note: Options that you choose for the lock screen override notifications settings for individual apps.

1. Swipe down from the top of the screen once using two fingers, or twice using one finger.
2. Tap ⚙ > **Sound & notification** > **When device is locked**.
3. Do one of the following:
   - To get all notifications on the lock screen, including the contents of incoming email messages and chats, tap **Show all notification content**.
   - To receive a notification, but keep the contents hidden (such as who sent an email or the title of the song you downloaded), tap **Hide sensitive notification content**. (To see this option, a screen lock option, such as a password, must be set.)
   - To prevent notifications from appearing on the lock screen, tap **Don't show notifications at all**.

Add owner info to your lock screen

You can add your name, a personal message, or any other information that displays on your device when the screen is locked.

1. Swipe down from the top of the screen once using two fingers, or twice using one finger.
2. Tap ⚙ > **Security** > **Owner info**.
3. Select the **Show owner info on lock screen** checkbox.
4. Type your name or the message you want to display on the lock screen.

BlackBerry Smart Flip Case

The BlackBerry Smart Flip Case helps protect the screen from scratches and smudges, and also lets you interact with your device without opening the cover. You have direct access to your device for incoming calls, notifications, alarms, and your music player. Your device goes into sleep mode when you close the cover and notifications that you set to appear on the lock screen display in the window. The full screen display extends when you open the cover.

Swiping horizontally to the left or the right within the case window dismisses notifications. Swiping up or down lets you move through the notifications.

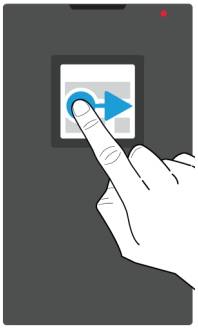

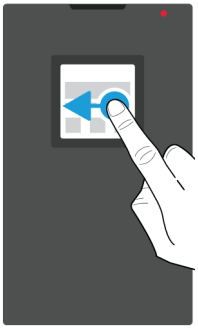

Using the BlackBerry Smart Flip Case

You can interact with your device, even when the cover of the flip case is closed.

View and delete notifications

When you receive notifications, such as reminders or messages, you can view them in the case window just as you would on the lock screen. Your priority and most recent notifications appear at the top of the list.

1. If necessary, press the **Power on/off** key to wake up your device. You can also double-tap the screen in the window if you turn on Wake-up gestures in Display settings.
2. Do any of the following:
    - To dismiss a notification from the list, swipe left or right on the notification.
    - To see more info in the notification, swipe up. The full notification displays in the window. Swipe left or right to dismiss.
    - To see the next notification in the list, swipe up.

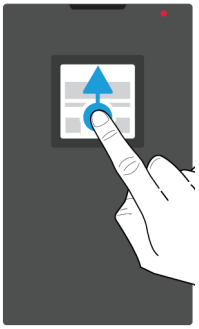

Answer or decline a call

Do one of the following:

- Swipe left to answer a call. When you're finished, swipe right to end your call.
- Swipe right to decline a call.

Manage your alarms

When your alarm goes off, do one of the following:

- Swipe right to dismiss the alarm.
- Tap in the window or swipe left to snooze.

Access music controls

If you close the case when you are playing music, you see information about the song, such as the artist name, in the case window.

Do any of the following:

- To see more information about the song, scroll up.
- Tap a control, such as **Pause** or **Next**.

Storage space and media cards

Using a media card

Get more space to store your ringtones, videos, pictures, songs, and more when you insert a microSD card into your device. By using a media card, you can expand your device's storage space by up to 2 TB. Using a media card can also help increase the performance and power efficiency of your device, and can allow you to transfer your data from your current device to another device that supports media card transfers.

To use a media card with a capacity greater than 32 GB, you must download the Microsoft exFAT Technologydriver for BlackBerry. A notification appears when you insert the media card into your device. Make sure that you are connected to the Internet, and then tap the notification to download the driver.

Delete the data from your media card

To help protect your privacy, you can permanently delete all of the data on your media card. Depending on the amount of data, this process might take some time.

CAUTION: After you wipe your media card, you can't recover any of the deleted data.

1. Make sure that your device isn’t connected to a computer.
2. Swipe down from the top of the screen once using two fingers, or twice using one finger.
3. Tap ⚙ > **Storage**.
4. In the SD card section, tap **Erase SD card** > **Erase SD card**.

Note: When you delete the data from your media card, the media card is automatically formatted.

Remove a media card

1. Do one of the following:
    - Turn off your device.

- Swipe down from the top of the screen once using two fingers, or twice using one finger.

2. Tap ⚙ > **Storage** > **Unmount SD card**.
3. With your device facing downwards, push the tip of the tool (provided with your device) into the hole on the top-left of your device to release the media card tray. If you don't have the tool that came with your device, you can also use a paper clip.

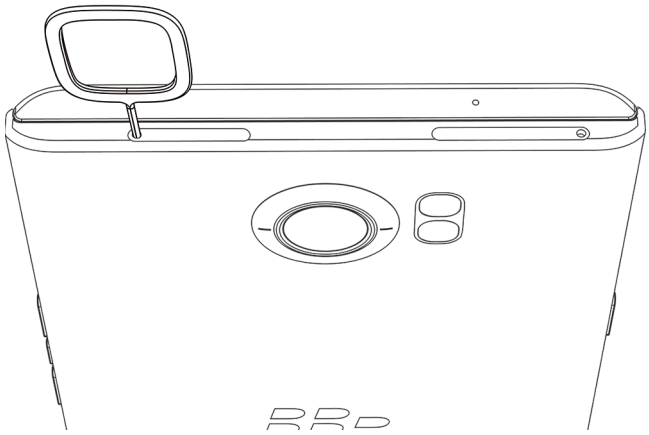

4. Pull out the tray completely and remove the media card.
5. Push the tray back into the slot.

Check how much storage space is free

You may notice slower performance on your device if your device's internal storage space is full or almost full. You can try removing unnecessary files and clearing cached data to free up space and improve your device's performance.

Note: Your device may start having performance issues when less than 10% of storage space is available.

1. Swipe down from the top of the screen once using two fingers, or twice using one finger.
2. Tap ⚙ > **Storage**.
3. Check the **Available** section to see how much space is left.

How do I free up storage space?

1. Swipe down from the top of the screen once using two fingers, or twice using one finger.
2. Tap ⚙ > **Storage**.
3. Do any of the following:

- To uninstall apps that you don't use, tap **Apps**, and then tap an app. Tap **Uninstall** > **OK**.

- To delete unnecessary data from your device, such as pictures, videos, audio files, or downloaded files, tap a category, and then tap a file. Tap **Delete**.
- To delete temporary files from your device by clearing your cache, tap **Cached data** > **OK**.

If you find your device running unusually slow, try any of the following:

- Close any apps that you aren't using.
- Delete messages that you don't need.
- In your browser, clear your history, cookies, and other web data.

Connections

Wireless connection icons

The following icons might appear at the top of your screen to indicate the wireless coverage level that your device currently has.

Icon	Description
	The amount of solid color indicates the strength of the mobile signal. If the signal is weak, your device might use more power to try to maintain the connection.
LTE 4GLTE 4G 3G+ 3G 2G 1X H+ H G E	Your device is connected to the mobile network and can access all of the features of your mobile network plan.
lte 4glte 4g 3g+ 3g 2g 1x h+ h g e	Your device is connected to the network type shown, but the network functionality is limited. You might be able to make a phone call, but you might not be able to access the Internet or view email messages.
	You have no mobile network coverage. You can only make emergency calls.
R	Your device is roaming. Extra charges might apply.
	The amount of solid color indicates the strength of the Wi-Fi signal. If the signal is weak, your device might use more power to maintain the connection.
	Your device is connected to a Wi-Fi network but there is no Internet connectivity. Your device uses the mobile network instead.
	Wi-Fi is turned off on your device.

Icon	Description
	Your device is connected to a VPN.
	Your device is in airplane mode and all of your wireless network connections are turned off. You can turn on Wi-Fi or Bluetooth technology, but not your connection to the mobile network.
	There is no SIM card in your device.

The following icons appear at the top of your screen if your device is connected or trying to connect to another device using mobile hotspot mode, Internet tethering, Bluetooth technology, a USB cable, or NFC.

Icon	Description
	Mobile hotspot mode is turned on.
	Bluetooth technology is turned on. If this icon is inside a box, your device is connected to another device using Bluetooth tethering.
	Your device is connected to another device using a USB cable. If this icon is inside a box, your device is connected to another device using USB tethering.
	NFC is turned on.

Choosing a connection

Your device is capable of a wide range of connections. Look at the following connection types for information and tips on using each type.

Network connections

Mobile network

A mobile network connection allows your device to make calls and, if you have a data plan, use data services such as Internet browsing. In some locations, such as in a hospital or on an airplane, you need to turn off your mobile network connection, but you can usually leave your mobile network connection on.

Wi-Fi

A Wi-Fi network connection is another way to use data services on your device, but, unlike the mobile network, using Wi-Fi doesn't add charges to your data plan. Your device is designed to try to use saved Wi-Fi networks before it connects to the mobile network for basic data functions, such as searching the Internet or downloading apps. You can leave Wi-Fi on so that as soon as you're in range of a saved Wi-Fi network, your device connects to it automatically. Keep in mind that if you leave the Wi-Fi network connection on, your battery can lose power more quickly.

Connections between devices

USB

You can use a USB cable to create a two-way connection between your device and a computer. Your device appears on your computer as a mapped drive. You can usually use a USB connection to drag files between your computer and your device, depending on the features available on your computer.

Bluetooth technology

Bluetooth wireless technology allows you to create a direct connection between your device and another Bluetooth enabled device. Although you can transfer files over a Bluetooth connection, because of its ability to stream content, Bluetooth connections are more commonly used for actions such as playing the music on your device through a separate speaker or making calls on a headset that is using your device's mobile network connection.

NFC

NFC is a short-range wireless technology that's used to quickly create connections between your device and other NFC-enabled devices or NFC tags. With NFC, you don't need to enter pairing information to make a connection, making NFC useful for on-the-go actions. You can exchange contact cards with people that you meet or grab information from a poster that contains an NFC tag. Features including Android™ Beam, Tap and Pay, and Tap and Go use NFC to transfer information between devices.

Shared Internet connections

You can use your device's connection to the mobile network to allow other devices to access the Internet. This functionality is useful if you want to browse the Internet on your laptop or a Wi-Fi only tablet but you don't have access to a Wi-Fi network.

Internet tethering

You can use Internet tethering when you have only one device that you want to connect to the Internet through your device's mobile network connection. You can connect the device to your BlackBerry device using a USB cable or, if both devices are Bluetooth enabled, you can use Bluetooth technology instead.

Mobile hotspot

You can use mobile hotspot mode to connect up to ten devices to your BlackBerry device. The number of devices that you can connect depends on your device model. When you use the mobile hotspot feature, your device becomes a Wi-Fi access point that other Wi-Fi enabled devices can connect to and use to access the Internet.

VPN connections

You can connect your device to a virtual private network (VPN) using the mobile network or a Wi-Fi connection. While your device is connected to the VPN, you can send data to and receive data from the private network across the public network.

Turn on airplane mode

In some places, such as on an airplane or in a hospital, you need to turn off all of the connections on your device. You can turn on airplane mode to turn off your connections quickly, and then turn off airplane mode to restore your connections quickly.

1. Swipe down from the top of the screen once using two fingers, or twice using one finger.
2. Tap ⚙ > **More**.
3. Turn on the **Airplane mode** switch.

With airplane mode turned on, you can turn on some connections, such as Wi-Fi and Bluetooth technology. This feature allows you to, for example, connect to an in-flight Wi-Fi network if one is available.

Mobile network

A mobile network connection allows your device to make calls and, if you have a data plan, use data services such as Internet browsing. In some locations, such as in a hospital or on an airplane, you might need to turn off your mobile network connection, but usually you can leave your mobile network connection turned on.

In most cases your device connects automatically to the appropriate wireless network when you travel outside of your service provider's coverage area. If you're not sure if your device is set up for roaming, or what roaming fees apply, it's a good idea to check with your service provider before you travel.

Connect to the mobile network

To connect to the mobile network, airplane mode must be turned off.

Your device is designed to connect automatically to your service provider's mobile network after you insert your SIM card into your device. If your device doesn't connect automatically, you can manually select the mobile network.

1. Insert your SIM card into your device.
2. If necessary, swipe down from the top of the screen once using two fingers, or twice using one finger.
3. Tap ⚙ > **More** > **Cellular networks** > **Network operators**.
4. Tap a network.

To turn off your mobile network connection, turn on airplane mode.

Turn off data services

To use data services, you must have a SIM card inserted into your device.

If you turn off data services, your device can't send or receive data over the mobile network and many features and apps on your device might not work properly. If you connect to a Wi-Fi network while you have your data services turned off, your device can continue to send and receive data.

1. Swipe down from the top of the screen once using two fingers, or twice using one finger.
2. Tap ⚙ > **Data usage**.
3. If necessary, tap the **Cellular** tab.
4. Turn off the **Cellular data** switch.

To turn on data services, turn on the **Cellular data** switch.

Change the APN settings for your default Internet connection

Your device uses Access Point Name (APN) settings to open a data connection with your service provider's wireless network. You might need to change your APN settings if you change your wireless service plan or if the default settings don't apply to your service provider. Depending on your service provider, you might not be able to change the APN settings.

1. Swipe down from the top of the screen once using two fingers, or twice using one finger.
2. Tap ⚙ > **More** > **Cellular networks** > **Access Point Names**.
3. Do one of the following:
   - To create a new APN, tap +.
   - To change an existing APN, tap an APN.
4. Complete the fields. If you don't have the required information, contact your service provider.

5. Tap ⋮ > **Save**.

To reset the default APN settings, tap ⋮ > **Reset to default**.

Set a preferred network type

1. Swipe down from the top of the screen once using two fingers, or twice using one finger.
2. Tap ⚙ > **More** > **Cellular networks** > **Preferred network type**.
3. Tap the type of network you prefer.

Roaming

Roaming is designed to let your device send data over other service provider networks when you travel outside of your service provider's wireless coverage area. In most cases, your device connects automatically to the appropriate wireless network. In some cases, you must contact your service provider to have your SIM card or device properly provisioned. If you're not sure if your device is set up for roaming, or what roaming fees apply, it's a good idea to check with your service provider before you travel.

Switch wireless networks manually

Your device is designed to switch to an appropriate wireless network automatically when you travel, but you might need to try switching networks manually if you have having trouble connecting or if the network signal is weak.

1. Swipe down from the top of the screen once using two fingers, or twice using one finger.
2. Tap ⚙ > **More** > **Cellular networks** > **Network operators**.
3. Do one of the following:
   - To switch to an available network automatically, tap **Choose automatically**.
   - To switch to a preferred network, tap a network.

Turn off data services while roaming

Depending on your wireless service plan, you might be able to turn off data services (email messages, PIN messages, text messages with attachments, and browser service) on your device so that only the phone and basic text messaging are available. Turning off data services while roaming might prevent you from receiving additional roaming charges. For more information, contact your service provider.

1. Swipe down from the top of the screen once using two fingers, or twice using one finger.
2. Tap ⚙ > **More** > **Cellular networks**.
3. Tap **Data services while roaming**.
4. Do one of the following:
   - To turn off data services, tap **Off**.

- To receive a prompt before using data services while roaming, tap **Prompt**.

To turn on data services while roaming, tap **On**.

Change your wireless service plan

To change your wireless service plan, you must have a SIM card inserted into your device.

Depending on your service provider, you might be able to change the details of your wireless service plan from your device.

1. Swipe down from the top of the screen once using two fingers, or twice using one finger.
2. Tap ⚙ > **More** > **Mobile plan**.
3. Complete the instructions on the screen.

Troubleshooting: Mobile network

I can’t connect to the mobile network

Try the following:

- Check that airplane mode is turned off. If airplane mode is turned on, your device can't connect to the network. Swipe down from the top of the screen once using two fingers, or twice using one finger. Tap ⚙ > **More**. Turn off the **Airplane mode** switch.
- Check that your device is connected to your service provider's network. If you switched wireless networks manually, your device remains connected to that wireless network. Select your service provider's network or set your device to connect automatically to your service provider’s network .
- Check that the SIM card is correctly inserted into your device.
- If your device normally connects to a CDMA network and your device supports international roaming, you can set your device to connect automatically while roaming. Swipe down from the top of the screen once using two fingers, or twice using one finger. Tap ⚙ > **More** > **Cellular networks** > **Network operators**, and then tap **Choose automatically**.

Wi-Fi connections

A Wi-Fi network connection is one way to get data services on your device, but unlike using the mobile network, using Wi-Fi doesn't add charges to your data plan.

Your device can be connected to the mobile network and a Wi-Fi network at the same time. Your device is designed to try to use saved Wi-Fi networks before it tries to use the mobile network for basic data functions, such as using the Internet or downloading apps.

You can leave Wi-Fi turned on so that when you're in range of a saved Wi-Fi network, your device can connect to it automatically.

Turn on Wi-Fi

When you connect to a Wi-Fi network, your device saves the network information. The next time you're within range of the saved Wi-Fi network, if Wi-Fi is turned on, your device connects automatically.

1. Swipe down from the top of the screen once using two fingers, or twice using one finger.
2. Tap ⚙ > **Wi-Fi**.
3. Turn on the switch.

To turn off Wi-Fi, turn off the switch.

Connect to a Wi-Fi network

When you connect to a Wi-Fi network, your device saves the network information. The next time your device is within range of the saved Wi-Fi network, if your device has Wi-Fi turned on, your device can automatically connect. If your device doesn't connect automatically, you can manually set up your connection to a Wi-Fi network.

1. Swipe down from the top of the screen once using two fingers, or twice using one finger.
2. Tap ⚙ > **Wi-Fi**.
3. If necessary, turn on the switch.
4. Tap a network.
5. Do one of the following:
   - If necessary, enter the password for the Wi-Fi network, and then tap **Connect**.
   - If you are connecting to a Wi-Fi network at work, enter your username and password, and then tap **Connect**.
   - If you are connecting to a public network, tap the sign-in notification and, if necessary, accept the license agreement. If necessary, tap ⋮ > **Use this network as is**.

Manually add a Wi-Fi network

You might need to add a Wi-Fi network manually to your device. To find out what information you should specify, you can ask your network administrator or the person who manages the Wi-Fi network.

1. Swipe down from the top of the screen once using two fingers, or twice using one finger.
2. Tap ⚙ > **Wi-Fi**.
3. If necessary, turn on the switch.
4. Tap ⋮ > **Add network**.
5. In the **Network name** field, type the SSID for the network.
6. In the **Security** drop-down list, tap the network's security type.
7. If necessary, select the **Advanced options** checkbox and specify additional information.

8. Tap **Save**.

Connect to a Wi-Fi network using a proxy

You can connect to any Wi-Fi network using a proxy. You must be within range of the Wi-Fi network to change the Wi-Fi settings and set up the proxy.

1. Swipe down from the top of the screen once using two fingers, or twice using one finger.
2. Tap ⚙ > **Wi-Fi**.
3. If necessary, turn on the switch.
4. Tap and hold a network.
5. Tap **Modify network**.
6. Select the **Advanced options** checkbox.
7. In the **Proxy** drop-down list, do one of the following:
   - To set up a proxy, tap **Manual**, and then enter the proxy settings.
   - To use a proxy already set up for the network, tap **Proxy Auto-Config**, and then confirm the proxy settings.
8. Tap **Save**.

Forget a saved Wi-Fi network

You can forget a saved Wi-Fi network if you don't want your device to connect to it automatically. Forgetting saved networks that use a hidden SSID can also help preserve battery life.

1. Swipe down from the top of the screen once using two fingers, or twice using one finger.
2. Tap ⚙ > **Wi-Fi**.
3. If necessary, turn on the switch.
4. Tap ⋮ > **Saved networks**.
5. Tap a network.
6. Tap **Forget**.

View saved Wi-Fi networks

When you connect your device to a Wi-Fi network, your device automatically saves the information required to connect to the network. When you are within range of a saved Wi-Fi network, your device automatically tries to connect to it. This is useful when you frequently move between Wi-Fi networks, such as your home Wi-Fi network and the Wi-Fi network at work.

1. Swipe down from the top of the screen once using two fingers, or twice using one finger.
2. Tap ⚙ > **Wi-Fi**.
3. If necessary, turn on the switch.
4. Tap ⋮ > **Saved networks**.

Write Wi-Fi connection information to an NFC tag

Turn on NFC on your device.

By writing Wi-Fi connection information to an NFC tag, you can allow others to connect to a password-protected Wi-Fi network with a simple tap of a device. This is helpful, for example, if you want to let guests use your home Wi-Fi network when they visit.

If the Wi-Fi network requires a username and password, for example, a Wi-Fi network at work, you can't write the Wi-Fi connection information to an NFC tag.

1. Swipe down from the top of the screen once using two fingers, or twice using one finger.
2. Tap ⚙ > **Wi-Fi**.
3. If necessary, turn on the switch.
4. Tap ⋮ > **Saved networks**.
5. Touch and hold a network name.
6. Tap **Write to NFC tag**.
7. Align the back of your device to an NFC tag, and then tap your device on the tag.

Set a static IP address for your Wi-Fi connection

By default, when you connect your device to a Wi-Fi network, your device assigns a local network assigned IP address to the connection. You can set a static IP address that doesn't change each time you connect to a Wi-Fi network.

You must be within range of the Wi-Fi network to change the Wi-Fi settings.

1. Swipe down from the top of the screen once using two fingers, or twice using one finger.
2. Tap ⚙ > **Wi-Fi**.
3. If necessary, turn on the switch.
4. Tap and hold a network.
5. Tap **Modify network**.
6. Select the **Advanced options** checkbox.
7. In the **IP settings** drop-down list, tap **Static**.
8. Change the IP address fields.
9. Tap **Save**.

Change advanced settings for your Wi-Fi connections

You can change advanced settings for your Wi-Fi connections. For example, you can set whether your Wi-Fi connection remains active when your device sleeps and you can change the Wi-Fi frequency band. You can also find the Media Access Control (MAC) address and IP address for your device.

1. Swipe down from the top of the screen once using two fingers, or twice using one finger.
2. Tap ⚙ > **Wi-Fi**.
3. If necessary, turn on the switch.
4. Tap ⋮ > **Advanced**.

Advanced Wi-Fi connection settings

Setting	Description
Network notification	Turn on this switch to receive a notification when your device is within range of a public Wi-Fi network.
Scanning always available	Turn on this switch to allow location services and apps to scan for Wi-Fi networks even when Wi-Fi is turned off.
Keep Wi-Fi on during sleep	Tap this option to choose whether your device remains connected to the Wi-Fi network when your device sleeps. If you turn off your Wi-Fi connection when your device sleeps, you might increase the amount of mobile data you use.
Wi-Fi frequency band	Tap to set the frequency band. When you set the band to 5.0 GHz, your device connects to access points on the 5.0-GHz band only. When set to 2.4 GHz, your device connects to access points on the 2.4-GHz band only. When set to automatic, your device tries to connect to the band with the stronger signal strength.
Install certificates	Tap this option to install digital certificates that can identify your device when, for example, your device connects to VPN or a Wi-Fi network.
Wi-Fi Direct	Tap this option to connect with available Wi-Fi Direct compatible devices.
WPS Push Button	Tap this option to turn on the Wi-Fi Protected Setup feature.
WPS PIN Entry	Tap this option to enter the PIN for the Wi-Fi Protected Setup feature.

Troubleshooting: Wi-Fi connections

I can’t connect to a Wi-Fi network

If you can’t connect to a Wi-Fi network that you recently set up, or you’re having problems connecting to a Wi-Fi network that you regularly connect to, start by checking the following:

- Verify that Wi-Fi is turned on. Swipe down from the top of the screen once using two fingers, or twice using one finger. Tap ⚙ > **Wi-Fi**.

- Try reconnecting to the Wi-Fi network by turning airplane mode on and off.
- Check that you are in a Wi-Fi coverage area. If you're trying to connect to a home network, check if other wireless devices are able to connect. If they can't, you might need to reset your router.
- If you're connecting to a work Wi-Fi network or a hotspot, talk to your administrator or an employee at the hotspot.
- Check that your device is set to stay connected to the Wi-Fi network when the device sleeps.
- Check that you are using the correct password and settings for the Wi-Fi network. To find out which settings to use, for a home network, refer to the information that came with your router; for a work Wi-Fi network, talk to your administrator; for a public hotspot, refer to any information provided for the hotspot or talk to an employee at the hotspot who might have details about how to connect.
- Try choosing a different authentication type in the **EAP method** drop-down list. Swipe down from the top of the screen once using two fingers, or twice using one finger. Tap ⚙ > **Wi-Fi**. Touch and hold the Wi-Fi network, and then tap **Modify network**.
- Turn off your device, and then turn it on again.
- Forget your Wi-Fi network, and then add your Wi-Fi network again.
- Check that mobile hotspot is off. If mobile hotspot is on, your device can't connect to a Wi-Fi network.
- Unplug your modem or router for 15 seconds, and then plug it in again.
- Try to connect your device to another Wi-Fi network at another location. If you can connect to the Wi-Fi network there, the problem might be specific to the Wi-Fi network at the original location and not your device.

If none of the suggestions above solve your connection issues, try the following more advanced troubleshooting options:

- Check that the time on your device is correct and synchronized with the network time. If the times are different, it could prevent your device from connecting (for example, connecting to a network might require that you have a certificate on your device, and the certificate has an expiration date).
- If your email account is a work account, your device might prevent connections to certain wireless access points. For more information, contact your administrator.

If you still can't connect, contact your Internet service provider.

Bluetooth connections

Bluetooth wireless technology allows you to create a direct connection between your device and another Bluetooth enabled device. Bluetooth connections are commonly used to play the music on your device through a separate speaker, make calls on a headset, share files, or connect your device to Android Wear™ or a car kit.

To connect your device to a Bluetooth enabled device, you must turn on Bluetooth technology on your device and pair your device with a Bluetooth enabled device.

Turn on Bluetooth technology

Turn on Bluetooth technology to connect to other Bluetooth enabled devices. When you turn on Bluetooth technology and the Bluetooth screen opens, your device is discoverable and visible to other Bluetooth enabled devices nearby.

1. Swipe down from the top of the screen once using two fingers, or twice using one finger.

2. Tap > **Bluetooth**.
3. Turn on the switch.

When Bluetooth technology is turned on, appears at the top of the screen.

To turn off Bluetooth technology, turn off the switch.

About pairing and connecting your device with a Bluetooth enabled device

Before you can connect your device with another Bluetooth enabled device, you must pair them. After you have paired the devices, in the future, you can manually connect the devices when they are in range of one another. Some paired devices, for example a car kit, usually connect to your device automatically.

Pair and connect your device with a Bluetooth enabled device

Make sure that you turn on Bluetooth technology on the device that you want to connect to.

To connect to a Bluetooth Smart device, you must download the Bluetooth Smart device app to your device, and then use the app to connect.

1. Swipe down from the top of the screen once using two fingers, or twice using one finger.
2. Tap > **Bluetooth**.
3. If necessary, turn on the switch.
   Your device automatically detects any discoverable devices within range.
4. If necessary, to scan again for nearby Bluetooth enabled devices, tap > **Refresh**.
5. Do one of the following:
   - If the device that you want to connect to appears in the **Available devices** list, tap the device name. Complete the instructions on the screen. If you're prompted to enter a pairing code, try entering 0000 or 1234 (the most common pairing codes), or check the documentation that came with the device.
   - If the device doesn't appear in the **Available devices** list, it might not be discoverable. Check that the Bluetooth enabled device that you want to connect to is discoverable, and then try again. If you don't know how to check that the device is discoverable, check the documentation that came with the device.

Your devices are now ready to communicate over the Bluetooth connection. Depending on the device you paired your device with, the devices are either already connected or ready to connect when you initiate an action, such as sharing a file.

About using Google Voice Search™ when connected to a car kit

If your device is connected to a Bluetooth enabled car kit, you can use Google Voice Search™. Google Voice Search™ lets you search for information on your device or over the Internet, and also allows you to update information on your device hands-free. For example, you can check the weather, search for a restaurant, or create an appointment.

To use Google Voice Search™ when your device is connected to a car kit, you must set up Bluetooth technology for Google Voice Search™. Your device must be paired with and connected to the car kit, and your contacts must be synced with the car kit.

For information on how to use the car kit, see the documentation that came with the vehicle.

Turn on Bluetooth technology for Google Voice Search™

To use Google Voice Search™ when connected to a Bluetooth enabled car kit, you must turn on the Bluetooth headset switch in the Google Voice Search™ settings. This setting lets you record and hear audio through your connected Bluetooth enabled device.

1. On the home screen, tap .
2. Open the Google™ Settings app.
3. Tap **Search & Now** > **Voice**.
4. Turn on the **Bluetooth headset** switch.

Use Google Voice Search™ from a car kit

Your contacts must be synced with the car kit.

When your device is connected to a car kit using Bluetooth technology, Google Voice Search™ responds to your request using audio through your car speakers. If Google Voice Search™ can't find a response for your request, it displays search results on your device.

1. From your car kit, search your contacts for **#VoiceSearch**.
2. From your car kit, call #VoiceSearch.
3. Say your question or other request.

Set which accounts Bluetooth enabled devices can access

You can allow Bluetooth enabled devices that support the Message Access Profile (MAP) to access text messages (SMS and MMS) and email messages for accounts that are set up on your BlackBerry device. Examples of Bluetooth enabled devices that support MAP include some car kits and some watches.

1. Swipe down from the top of the screen once using two fingers, or twice using one finger.
2. Tap > **Bluetooth**.
3. If necessary, turn on the switch.
4. Tap > **Advanced**.
5. To allow access to your messages, turn on the switch for a messaging account.

Change the name of your device for Bluetooth connections

Your device has a default Bluetooth name. This name is visible to other Bluetooth enabled devices when you turn on Bluetooth technology on your device and when you are connected to a Bluetooth enabled device. You can change the default name to a different name that is more recognizable.

1. Swipe down from the top of the screen once using two fingers, or twice using one finger.
2. Tap ⚙ > **Bluetooth**.
3. If necessary, turn on the switch.
4. Tap ⋮ > **Rename this device**.
5. Enter a new name for your device.
6. Tap **Rename**.

Change setup of a paired Bluetooth enabled device

Some Bluetooth enabled devices support more than one Bluetooth feature. You can turn a feature on or off for a paired Bluetooth enabled device. You can also change the name of a paired device as it appears on your device.

1. Swipe down from the top of the screen once using two fingers, or twice using one finger.
2. Tap ⚙ > **Bluetooth**.
3. Tap ⚙ beside the device you want to change.
4. Do any of the following:
   - To turn a feature on or off, tap the profile.
   - To rename the device, in the **Name** field, enter the new name for the device.
5. Tap **OK**.

View a list of files you received over Bluetooth

When a file is sent to your device over a Bluetooth connection, you receive a notification asking you if you want to receive the file. You can open the file from your notifications. You can also see a list of files you've received from the Bluetooth settings screen.

1. Swipe down from the top of the screen once using two fingers, or twice using one finger.
2. Tap ⚙ > **Bluetooth**.
3. If necessary, turn on the switch.
4. Tap ⋮ > **Show received files**.

Disconnect from a Bluetooth enabled device

When your device is connected to a Bluetooth enabled device, it automatically disconnects when the device is out of range. You can also manually disconnect your device.

1. Swipe down from the top of the screen once using two fingers, or twice using one finger.
2. Tap ⚙ > **Bluetooth**.
3. Tap the device that you want to disconnect from.
4. Tap **OK**.

Delete a paired Bluetooth enabled device

If you no longer want to connect to a Bluetooth enabled device, you can delete the device from the list of paired devices.

1. Swipe down from the top of the screen once using two fingers, or twice using one finger.
2. Tap ⚙ > **Bluetooth**.
3. Tap ⚙ beside the device you want to disconnect.
4. Tap **Forget**.

Supported Bluetooth profiles

Your device is a Bluetooth Smart Ready device, and supports the following profiles.

Profile	Description
Advanced Audio Distribution Profile (A2DP)	This profile allows your device to stream audio files to Bluetooth enabled devices that support stereo audio, such as stereo headsets, speakers, and car kits.
Audio/Video Remote Control Profile (AVRCP)	This profile allows you to use the buttons on a Bluetooth enabled device, such as a headset, to perform actions such as adjusting the volume or playing the next or previous media file on your device. This profile also displays information about songs on a Bluetooth enabled device.
Device Identification Profile (DID)	This profile allows Bluetooth enabled devices to access information about your device model to support plug and play features, such as automatically downloading the required drivers.
Hands-Free Profile (HFP)	This profile allows you to connect your device to Bluetooth enabled headsets and car kits to make hands-free calls. This profile supports wideband audio.
Headset Profile (HSP)	This profile allows you to connect your device to a Bluetooth enabled headset.

Profile	Description
Human Interface Device Profile (HID)	This profile allows you to connect your device to a Bluetooth enabled device, such as a keyboard or mouse.
Human Interface Device over Gatt Profile (HOGP)	This profile allows you to connect your device to a Bluetooth Smart device, such as a keyboard or mouse.
Message Access Profile (MAP)	This profile allows a car kit to access messages on your device and lets you browse and read the messages. If supported by the car kit, you can also delete, compose, and send messages from your car.
Object Push Profile (OPP)	This profile allows your device to send files to and receive files from a Bluetooth enabled device.
Personal Area Network Profile (PAN)	This profile allows you to use your device to share your network connection when connected to a Bluetooth enabled computer. This profile also lets you connect your device to another device that is sharing its network connection.
Phone Book Access Profile (PBAP)	This profile allows a Bluetooth enabled car kit to access contact information and recent call history information on your device. This profile allows the car kit to display the contact name for an incoming call.
Serial Port Profile (SPP)	This profile allows you to connect your device to other Bluetooth enabled devices that support the Serial Port Profile for data transfer.
Remote SIM Access Profile (rSAP)	This profile allows a Bluetooth enabled device, such as a car kit, to access the SIM card on your device.

Troubleshooting: Bluetooth connections

I can't pair my device with a Bluetooth enabled device

- Check that your device is compatible with the Bluetooth enabled device. For more information, see the documentation that came with the Bluetooth enabled device.
- If your Bluetooth enabled device requires a passkey and you don't know what the passkey is, check the documentation that came with your Bluetooth enabled device. Sometimes the passkey is set to 0000 until you change it. If you don't know what the passkey is, try 0000.
- If the Bluetooth enabled device uses a battery, connect it to a power source and then try again. Depending on the device, if the battery power level is too low the device might still operate but be unable to pair with another device.
- If mobile hotspot is turned on, verify that you're trying to connect to a Bluetooth enabled device that uses the Hands-Free, Serial Port, or Personal Area Network profiles.

I keep losing the connection with my Bluetooth enabled car kit

- Check that your car kit is using the latest software version. For more information about your car kit's software version, see the documentation that came with your car kit.
- Move your device to another location in your vehicle or turn your device to face another direction. The location of your device's antenna in relation to your car kit's Bluetooth antenna may affect the Bluetooth connection.

I can't hear Google Voice Search™ audio on my Bluetooth enabled device

Try any of the following:

- If your device is connected to a Bluetooth enabled headset or a car kit and you try to use Google Voice Search™, by default Google Voice Search™ uses the speaker and microphone on your BlackBerry device instead the speaker and microphone on your Bluetooth enabled device. Turn on Bluetooth voice settings for Google Voice Search™. On the home screen, tap , and then open the Google™ Settings app. Tap **Search & Now** > **Voice**. Turn on the **Bluetooth headset** switch.
- Turn up the volume on the Bluetooth enabled device.

NFC

What is NFC?

NFC is a short-range wireless technology used to create a connection to share information between your device and other NFC-enabled devices or NFC tags. Features on your device that use NFC technology include Android™ Beam, Tap and Pay, and Tap and Go.

Depending on the apps you have installed on your device and the NFC compatibility of other devices, some of the ways you can use NFC include:

- Pass a picture to your friend.
- Tap an NFC tag to unlock your device using the Smart Lock feature.
- Grab a coupon from a poster you see on the street.
- Send a webpage you're viewing to a friend.
- Transfer your device data to a new device.
- Exchange contact cards with a new friend or business acquaintance.
- Tap an NFC-enabled printer to print a message from your device.

Some NFC apps are designed to simulate a physical card, such as a credit card, a public transit pass, or an access badge. Some of the ways you can use these types of NFC apps include:

- Pay for your morning coffee without taking out your wallet.
- Pay for your bus or subway ride.
- Gain access to your building when you get to work.

To use NFC, you simply tap the back of your device to the back of another NFC-enabled device or an NFC tag.

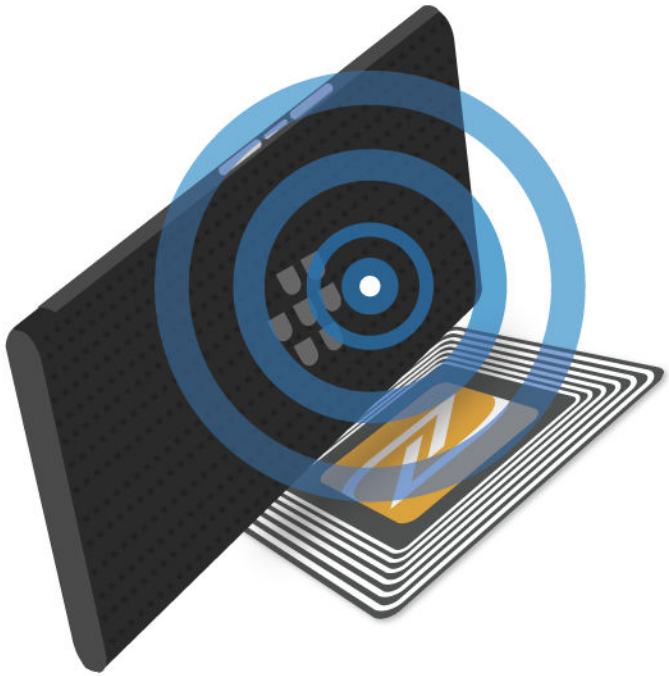

Change your NFC settings

You can customize the NFC experience on your device by changing your NFC settings. You can set up your device to display a prompt before it receives a file using NFC. You can also set up when your device can complete an NFC card transaction, such as making a payment using a payment app.

1. Swipe down from the top of the screen once using two fingers, or twice using one finger.
2. Tap ⚙ > **More**.
3. Tap **NFC**.
4. Do any of the following:
   - To receive a prompt before your device receives a file using NFC, turn on the **Prompt before receiving** switch.
   - To allow NFC card transactions when the backlight is off, turn on the **Allow when screen is off** switch.
   - To allow NFC card transactions that are handled by your SIM card when your device is turned off, turn on the **Allow when device power is off** switch.

Share content using Android™ Beam

Make sure both devices are unlocked and support NFC. On your device, make sure Android™ Beam is turned on.

You can use Android™ Beam to exchange different types of files, including photos, videos, webpages, and other content from your device with another NFC-enabled device.

1. On your device, open a screen that contains something you would like to share, such as a webpage, a YouTube video, or a contact.
2. Do one of the following:
   - Tap > **NFC**. Align the back of your device with an NFC-enabled device.
   - Align the back of your device with an NFC-enabled device. If necessary, touch the screen of your device to start sending the file.

   When the devices connect, you will hear a sound or your device might vibrate.

About tap and pay

The tap and pay feature is available on your device when NFC is turned on. If you have a payment app installed on your device, you can tap the back of your device to an NFC payment terminal to pay for your purchase.

If you have more than one payment app installed on your device, you should set one of the apps as your default payment app. When you tap to pay for a purchase, the default app is used unless you have set up the tap and pay feature to use whichever payment app is open in the foreground at the time of purchase.

Set up tap and pay

To set up the tap and pay feature, you must install at least one payment app on your device.

1. Swipe down from the top of the screen once using two fingers, or twice using one finger.
2. Tap > **Tap & pay**.
3. Do any of the following:
   - To set a default payment app, tap the payment app.
   - To set up the tap and pay feature to use the payment app that is open and in the foreground, turn on the **Favor foreground app** switch.

Turn off NFC

By default, NFC is turned on. When NFC is turned on, other features are also turned on including Android™ Beam and Tap and Pay. If you turn off NFC, other features that use NFC also turn off.

Default NFC settings might vary depending on your service provider or administrator settings.

1. Swipe down from the top of the screen once using two fingers, or twice using one finger.
2. Tap ⚙ > **More**.
3. Tap **NFC**.
4. Turn off the **Turn on NFC** switch.

Turn off Android™ Beam

You can turn off the Android™ Beam feature and continue to use other NFC features. You can also still receive NFC file transfers. Android™ Beam turns off automatically when you turn off NFC.

1. Swipe down from the top of the screen once using two fingers, or twice using one finger.
2. Tap ⚙ > **More**.
3. Tap **NFC**.
4. Turn off the **Turn on Android Beam** switch.

Tethering and mobile hotspot

Internet tethering

Internet tethering allows you to share your device's connection to the mobile network with one other device, such as a laptop or tablet. You can connect the other device to your BlackBerry device using a USB cable or, if both devices are Bluetooth enabled, you can use Bluetooth technology instead.

Additional charges might apply for using Internet tethering.

Mobile hotspot

When you use the mobile hotspot feature, your device becomes a wireless access point that other Wi-Fi enabled devices can connect to and access the Internet. Up to ten other devices can connect to your Wi-Fi network at one time, depending on your device model.

The mobile hotspot feature requires the use of the mobile network. You might incur additional data charges while using mobile hotspot.

The mobile hotspot feature can use a lot of battery power. For the best performance, plug your device into a battery charger when you use mobile hotspot.

Use Internet tethering to share your mobile network connection

If your device has mobile data, you can share its Internet connection with another device, such as a laptop or tablet. You can tether your devices using an appropriate cable or a Bluetooth connection.

1. Swipe down from the top of the screen once using two fingers, or twice using one finger.
2. Tap ⚙ > **More** > **Tethering & mobile hotspot**.
3. Do one of the following:
   - Connect your device to another device using a USB cable, and then turn on the **USB tethering** switch.
   - Turn on the **Bluetooth tethering** switch, and then connect your device to another device using Bluetooth technology.

To stop sharing your Internet connection, turn off the **USB tethering** or **Bluetooth tethering** switch.

Use mobile hotspot to share your Internet connection

Before you turn on mobile hotspot, confirm that your device is connected to the mobile network.

When you set up your mobile hotspot, record the name of your mobile hotspot and the password. You, or the user of another device that wants to connect to your mobile hotspot, must know the name of your mobile hotspot and the password to connect.

1. Swipe down from the top of the screen once using two fingers, or twice using one finger.
2. Tap ⚙ > **More** > **Tethering & mobile hotspot**.
3. If you've never used mobile hotspot mode before or if you want to change your setup, tap **Set up mobile hotspot**.
4. Confirm or change the setup information, and then tap **Save**.
5. Turn on the **Mobile hotspot** switch.

To stop sharing your Internet connection, turn off the **Mobile hotspot** switch.

View a list of devices that are connected to your mobile hotspot

Mobile hotspot must be turned on.

1. Swipe down from the top of the screen once using two fingers, or twice using one finger.
2. Tap ⚙ > **More** > **Tethering & mobile hotspot** > **Connected devices**.

Troubleshooting: Tethering and mobile hotspot

I can't use Internet tethering

- Check that your device is connected to the mobile network.
- Check that your wireless service plan is set up to use Internet tethering. If not, you must change your wireless service plan before you can use Internet tethering.
- If your wireless service plan supports Internet tethering while roaming, check that data roaming is turned on. Swipe down from the top of the screen once using two fingers, or twice using one finger. Tap ⚙ > **More** > **Cellular networks**.
- Check that data services are turned on. Swipe down from the top of the screen once using two fingers, or twice using one finger. Tap ⚙ > **Data usage**. Confirm that the **Cellular data** switch is turned on.
- If you are using your device for work, your organization might not allow the use of Internet tethering. For more information, check with your administrator.

I can't use my device as a mobile hotspot

- Check that you're connected to the mobile network.
- Check that your wireless service plan is set up to use the mobile hotspot feature. If not, you must change your wireless service plan before mobile hotspot can work on your device.
- Your service provider might not allow the use of the mobile hotspot feature while roaming. For more information, check your wireless service plan or contact your service provider.
- If you're using your device for work, your organization might not allow the use of the mobile hotspot feature. For more information, check with your administrator.

I can't connect multiple devices to my mobile hotspot

Depending on your device model, you might not be able to connect multiple devices to your mobile hotspot, or the number of devices you can connect might be less than ten.

VPN connections

A virtual private network (VPN) profile contains information required to let your device connect to a private network over a public network, such as the Internet. Only the device owner can add and manage VPN profiles on your device.

If you use your device for work, a VPN profile lets you connect securely to your organization's intranet when you are working outside of the office. When you connect to a private network using a VPN profile, the security and data management policies set up for the private network protect your data. You might need to install a VPN app on your device. Contact your administrator for the app or download it on Google Play™.

Add a VPN profile

You must set a screen lock for your device before you can add a VPN profile. For the network information required to add a virtual private network (VPN) profile to your device, contact your administrator.

1. Swipe down from the top of the screen once using two fingers, or twice using one finger.
2. Tap ⚙ > **More** > **VPN** > ＋.
3. Complete the fields on the screen.
4. Tap **Save**.

Connect to a VPN

You must add a virtual private network (VPN) profile to your device before you can connect to a VPN.

1. Swipe down from the top of the screen once using two fingers, or twice using one finger.
2. Tap ⚙ > **More** > **VPN**.
3. Tap a VPN profile.
4. Enter your login information, and then tap **Save account information** to connect automatically next time.
5. Tap **Connect**.

To disconnect from a VPN, on the **VPN** screen, tap the VPN profile you are connected to. Tap **Disconnect**.

Change or delete a VPN profile

1. Swipe down from the top of the screen once using two fingers, or twice using one finger.
2. Tap ⚙ > **More** > **VPN**.
3. Touch and hold a VPN profile.
4. Do one of the following:
   - Tap **Edit profile**. Change the information, and then tap **Save**.
   - Tap **Delete profile**.

About Always-on mode

Some virtual private networks (VPNs) support Always-on mode. If Always-on mode is turned on and your device loses its VPN connection, your device stops sending or receiving data until Always-on mode re-establishes the VPN connection automatically.

Your device uses your login information to connect automatically to a VPN profile that is set up to use Always-on mode. When connected, your device displays a notification in the notification drawer. The notification tells you the status of the VPN connection.

Turn on Always-on mode for a VPN profile

The first time you connect to a virtual private network (VPN), save your username and password.

1. Swipe down from the top of the screen once using two fingers, or twice using one finger.
2. Tap ⚙ > **More** > **VPN**.
3. Tap ⋮ > **Always-on VPN**.
4. Tap a VPN profile.
5. Tap **OK**.

To turn off Always-on mode, on the **VPN** screen, tap ⋮ > **Always-on VPN** > **None** > **OK**.

Emergency broadcast messages

When you set up the emergency broadcast messages feature, public warning messages (SMS or MMS) are sent to your device to warn you of possible threats to safety in your area. Examples of emergency broadcast messages include severe weather warnings, missing child alerts, and national emergencies.

Depending on your service provider, emergency broadcast messages don't contribute to data usage in your wireless service plan.

You can view emergency broadcast messages that you receive from the Advanced settings screen in the Messenger app.

This feature might not be supported, depending on your region, service provider, or wireless network. For more information, contact your service provider or administrator.

Turn off emergency broadcast messages

1. Swipe down from the top of the screen once using two fingers, or twice using one finger.
2. Tap ⚙ > **More** > **Emergency broadcasts**.
3. Select the checkbox for the type of public warning you want to turn off.

Change the settings for emergency broadcast messages

You can set your device to vibrate when you receive an emergency broadcast message. You can also set a language for broadcast messages and how often you receive reminders for broadcast messages.

Some settings might not be available depending on your region.

1. Swipe down from the top of the screen once using two fingers, or twice using one finger.
2. Tap ⚙ > **More** > **Emergency broadcasts**.
3. Do any of the following:

- To receive a reminder for emergency broadcast messages, tap **Alert reminder**, and then tap how often you want to receive a reminder.
- To stop your device from vibrating when you receive an emergency broadcast message, clear the **Vibrate** checkbox.
- To change the language of your broadcast messages, tap a language.
- To use the text-to-speech feature, tap **Speak alert message**.

Data usage

Data usage refers to the amount of data your device uploads and downloads when connected to the wireless network in a given amount of time. If you share your device with others, the data usage info is broken down by the guest and user profiles that are set up on the device.

Data usage values are measured by your device. Your service provider might count data usage differently. If you go over your plan's data usage limit, your service provider might charge you additional fees. Check your wireless service plan for information about your data limits.

Only the device owner can change settings to optimize data usage on your device. Data usage settings apply to all user profiles set up on the device.

Monitor your wireless data usage

You can check how much data you use by wireless network type, time period, app, or in total.

1. Swipe down from the top of the screen once using two fingers, or twice using one finger.
2. Tap ⚙ > **Data usage**.
3. If you are connected to the mobile network and want to see your Wi-Fi usage, tap ⋮ > **Show Wi-Fi**.
   To switch between wireless network types, tap the **Cellular** tab or the **Wi-Fi** tab.
4. Do any of the following:
   - To check how much data you used during the current data usage cycle, view the value beside the time period.
   - To check how much data an app used, tap an app.
   - To check how much data each user profile set up on the device used, tap a user profile.
   - To check how much data you used during a different time period, tap ▾ > **Change cycle**. Tap a date, and then tap **Set**.

Tip: You can close some apps to help reduce your data usage or improve the device performance.

Set up a data usage notification

To set up a data usage notification, your wireless service plan must include data services.

You can set up your device to send you a notification when your device uses a specified amount of data.

1. Swipe down from the top of the screen once using two fingers, or twice using one finger.
2. Tap ⚙ > **Data usage**.
3. If necessary, tap the **Cellular** tab.
4. If necessary, turn on the **Cellular data** switch.
5. Drag the line at the top of the graph to set the data amount.

Set a data usage limit to turn off data services automatically

To set a data limit, your wireless service plan must include data services.

You can set a limit on the amount of data that your device can use when it's connected to the mobile network. If your device reaches that limit, your device automatically turns off data services and sends you a notification. Services and apps on your device might not work correctly when data services are turned off.

1. Swipe down from the top of the screen once using two fingers, or twice using one finger.
2. Tap ⚙ > **Data usage**.
3. If necessary, tap the **Cellular** tab.
4. If necessary, turn on the **Cellular data** switch.
5. Turn on the **Set cellular data limit** switch, and then tap **OK**.
6. Drag the line at the top of the graph to set the data limit.

Change how apps send background data when connected to the mobile network

Some apps and services automatically sync data to your device or send data when you aren't actively using the app or service. To reduce the amount of data your device uses, you can stop apps and services from sending data in the background when your device is connected to the mobile network.

If you restrict background data when connected to the mobile network, apps and services might not work correctly until your device connects to a Wi-Fi network.

1. Swipe down from the top of the screen once using two fingers, or twice using one finger.
2. Tap ⚙ > **Data usage**.
3. If necessary, tap the **Cellular** tab.
4. If necessary, turn on the **Cellular data** switch.
5. Do one of the following:
   - To turn off background data for all apps and services on your device, tap ⋮ > **Restrict background data**, and then tap **OK**.
   - To turn off background data for an app or service, tap the app or service. Turn on the **Restrict app background data** switch, and then tap **OK**.

- To group background data and send it at set intervals, turn on the **Queue cellular data** switch.

To let all apps and services on your device send data in the background, tap ⋮ > **Allow background data**. To let an app or service send data in the background, turn off the **Restrict app background data** switch.

Stop sending data on some Wi-Fi networks

You can stop apps and services from sending data in the background, and prevent your device from downloading large files when it's connected to certain Wi-Fi networks.

1. Swipe down from the top of the screen once using two fingers, or twice using one finger.
2. Tap ⚙ > **Data usage** > ⋮ > **Network restrictions**.
3. Tap a network name.

Battery and power

Turn off your device

1. Press and hold the **Power on/off** key on the left side of your device.
2. Tap **Power off**.

Put your device in standby mode

When your device is in standby mode, the backlight turns off and the screen locks. Wireless connections and clock alarms aren't affected.

Press the **Power on/off** key on the left side of your device.

To wake up your device, press the **Power on/off** key.

Charge your device

Before you start using your device, you should charge it because the battery that came with your device isn't fully charged.

Charge your device using the charger provided with your device. You can also charge your device using a USB cable connected to a computer, but charging might take longer.

CAUTION: Other chargers might not provide adequate power and might damage your device.

1. Hold the cable with the BlackBerry logo facing the front of the device, and insert the cable into the multi-function port on your device.
2. Plug the charger into a power outlet.

Keeping your battery charged

Your device uses a lithium-ion battery. To maximize your use of this type of battery, when possible, do the following:

- Avoid using your device while it's charging to help it charge faster.
- Do not leave your device plugged into a charger after it has approached a full charge.
- Avoid charging, using, or storing your device in extremely hot or cold places, such as on a vehicle dashboard.
- Avoid leaving your device turned off with a low battery power level for an extended period. If you plan to store your device for an extended period, partially charge the battery and put the device in a cool, dry place.

About wireless charging

Some service providers support wireless charging for your device. You can charge your device by setting it on a supported charging mat instead of connecting your device to a charger.

You can use the following device models with Qi and Power Matters Alliance (PMA) wireless chargers:

- PRIV by BlackBerry STV100-1 smartphone
- PRIV by BlackBerry STV100-2 smartphone
- PRIV by BlackBerry STV100-5 smartphone

Tip: To find your device's model number, swipe down from the top of the screen once using two fingers, or twice using one finger, and then tap > **About phone**.

Battery and charging icons

The battery power level icons appear at the top of the screen.

Icon	Description
	The battery is charging.
	The battery is fully charged and still connected to a power source.
	The battery is getting low on power.
	Battery saver mode is turned on, or you can turn it on from your list of notifications.
	The battery is at 5% power or less. If the battery charge gets too low, your device might turn off. Save any work in progress and charge your device.
	There is a problem with the battery, and the battery might need to be replaced.

Check your battery power level and usage info

1. Swipe down from the top of the screen once using two fingers, or twice using one finger.
2. Tap > **Battery**.

Tip: If you're not charging your device, this screen also displays an estimate of how long until your device is done charging.

How can I extend battery life?

You can try closing any apps or features that you're not using. You can also try turning down your screen brightness or device volume.

Turn on Battery saver mode

Battery saver mode conserves battery power by limiting features like vibration, location services, and data services.

Note: When Battery saver mode is turned on, some applications and messaging services that rely on syncing might not update unless you open them.

1. Swipe down from the top of the screen once using two fingers, or twice using one finger.
2. Tap **Battery saver**.

Dim the screen

You can conserve battery power by lowering the screen brightness, choosing a dark-colored wallpaper, or changing the screen sleep settings from the Display settings.

1. Swipe down from the top of the screen once using two fingers, or twice using one finger.
2. Tap > **Display** > **Brightness level**.
3. On the slider, drag the slider handle to the left.

Decrease volume

Do any of the following:

- To decrease the device volume, use the volume keys on the side of your device.
- To adjust other volume settings, such as media volume or alarm volume, swipe down from the top of the screen once using two fingers, or twice using one finger. Tap > **Sound & notification**.

Close apps and features

Increase how long your battery power lasts by closing any apps or features that you're not using so that they aren't continuously running in the background. Some features consume more battery power than others, including the Camera app, the Browser app, GPS, and Bluetooth technology. Close or turn off these apps and features when you aren't using them.

To see and close the applications that are running, tap . On the app that you want to close, tap .

Some features, such as Bluetooth technology, must be closed through the device settings. Swipe down from the top of the screen once using two fingers, or twice using one finger. Tap the Quick Setting icon for that feature, or tap .

Turn off connections

If your device is out of a wireless coverage area, you can turn off connections so that your device doesn't search for a network signal continuously. You can also help extend battery life by deleting saved Wi-Fi networks that you no longer use.

1. Swipe down from the top of the screen once using two fingers, or twice using one finger.
2. Tap .
3. Do any of the following:
   - To turn off all connections at once, in the **Wireless & networks** section, tap **More**. Turn on the **Airplane mode** switch.
   - To turn off a Wi-Fi connection, tap **Wi-Fi**. Turn off the switch.
   - To delete a saved Wi-Fi network, tap **Wi-Fi**. Tap a Wi-Fi network, and then tap **Forget**.

Using Battery saver mode

You can set up Battery saver mode to turn on automatically and help make your battery last longer when you need it most! When Battery saver mode is turned on, your device conserves battery power by limiting vibration, location services, and background data capabilities. If you want to save more battery power, you can adjust more settings.

By default, Battery saver mode turns off automatically when your device is plugged into a power source.

Note: When Battery saver mode is turned on, some applications and messaging services that rely on syncing might not update unless you open them.

Change when Battery saver mode turns on

1. Swipe down from the top of the screen once using two fingers, or twice using one finger.
2. In the upper-right corner of the screen, tap > .
3. Tap **Battery saver** > **Turn on automatically**.
4. Tap an option.

Turn off Battery saver mode

Battery saver mode is automatically turned off when you start charging your device. You can also turn off Battery saver mode manually.

1. Swipe down from the top of the screen once using two fingers, or twice using one finger.
2. Tap **Battery saver**.

Device and battery safety

You should use only the battery that BlackBerry specifies for use with your particular BlackBerry device model. If you use any other battery, you might invalidate any warranty provided with your device.

CAUTION: There is a risk of explosion if the battery is replaced with an incorrect battery type. Do not try to replace your nonremovable battery. Only qualified service personnel should perform repairs or battery replacements in your device.

Device and battery disposal

Please recycle your device and battery in accordance with your local regulations. Do not dispose of either your device or battery in a fire. Your device or battery should not be placed in household waste bins. For information about returning your device to BlackBerry for recycling and safe disposal, from a browser on your computer visit http://www.blackberry.com/recycling. The recycling and trade-up program is available only in certain areas.

View the safety, warranty, and privacy information for your device

Take a moment to review the license agreement, limited warranty, safety information, and privacy policies for your device. These documents are available from your device settings screen. They contain important information about terms and conditions of use, battery, and other important safety precautions, and warranty coverage.

To view BlackBerry's *Privacy Policy*, your device must be connected to the Internet.

1. Swipe down from the top of the screen once using two fingers, or twice using one finger. Then tap ⚙.
2. Tap **About phone** > **Legal information**.

Display

Set your wallpaper

Add your favorite photo to the home screen of your device.

1. In the Photos app, tap a picture.
2. Tap ⋮ > **Set as**. If necessary, tap **More**.
3. Tap **Wallpaper**.
4. Slide your fingers apart or together to zoom in or zoom out.
5. Tap **Set wallpaper**.

Tip: To change your wallpaper, touch and hold a blank area on a home screen. Tap **Wallpapers**. Tap a wallpaper or a Live Wallpaper. To use a picture as your wallpaper, tap **Select image** and tap a picture.

Take a screen shot

Press and hold the **Volume down** key and the **Power** key at the same time.

Your screen shot is saved in the Photos app.

Change the screen brightness

1. Swipe down from the top of the screen once using two fingers, or twice using one finger.
2. Tap > **Display** > **Brightness level**.
3. Tap and drag the slider back and forth to adjust the brightness.

Tip: Turn on the **Adaptive brightness** switch to allow your device to detect the light around you and automatically adjust the brightness level.

Change your font size

1. Swipe down from the top of the screen once using two fingers, or twice using one finger.
2. Tap > **Display** > **Font size**.
3. Tap the text size that you want to use.

Turn on or turn off screen rotation

Choose whether or not your screen rotates when you turn your device.

1. Swipe down from the top of the screen once using two fingers, or twice using one finger.
2. Tap > **Display** > **When device is rotated**.
3. Tap **Rotate the contents of the screen** or **Stay in portrait view**.

Tip: You can also turn on and off automatic rotation in the Quick Settings menu when you tap or .

Set up Daydream™

With Daydream™, you can display your photos, apps, and more as screensavers while your device is idle or charging. You can customize what to display and when.

1. Swipe down from the top of the screen once using two fingers, or twice using one finger.

2. Tap ⚙ > **Display** > **Daydream**.
3. Turn on the switch.

Choose what to display in Daydream™

After you turn on the Daydream™ feature, you can select which dreams you want to display, such as the clock or pictures, when your device is sleeping.

1. On the Daydream™ screen, tap a dream.
2. If necessary, tap ⚙ beside a dream to see even more customization options.

Your dreams display the next time your device goes to sleep. To show dreams right away, tap ⋮ > **Start now**.

To download or buy more dreams from the app store, tap ⋮ > **Install More Dreams**.

Set when to Daydream™

When the Daydream™ feature is on, you can set when dreams display on your device.

1. On the Daydream™ screen, tap ⋮ > **When to daydream**.
2. Tap **While docked**, **While charging**, or **Either**.

Set the wait time for sleep mode

Set the length of time that your device remains inactive before entering sleep mode and before your Daydream starts.

1. Swipe down from the top of the screen once using two fingers, or twice using one finger.
2. Tap ⚙ > **Display** > **Sleep**.
3. Tap a time.

About Chromecast™

Chromecast™ is a small media streaming device that connects to an HDMI port on your TV. When Chromecast™ and your device are connected to the sameWi-Fi network, you can send supported apps and websites from your device to the larger display screen on your TV. You can also mirror your device screen on your TV.

For information about apps you can use with Chromecast™, go to chromecast.com/apps.

Cast your screen

Using Chromecast™ or a Wi-Fi CERTIFIED Miracast device, you can share the screen of your device with a larger display, such as a TV or a boardroom projector.

1. Swipe down from the top of the screen once using two fingers, or twice using one finger.
2. Tap > **Display** > **Cast screen**.
3. If necessary, tap and select the **Enable wireless display** checkbox.
4. Tap the device that you want to share your screen on.

Tip: After you set up devices that you want to share your screen on, you can access them in the Quick Settings menu by tapping .

To stop casting your screen, swipe down from the top of the screen once with two fingers or twice with one finger. Tap **Disconnect**.

Use your device as a flashlight

1. On a home screen, swipe down from the top of the screen.
2. Tap .

To turn off the flashlight, tap .

Accessibility

About accessibility features on your device

Your device comes with several well-established accessibility aids for people with disabilities.

For more information on the following features, visit Android Accessibility Help.

- Magnification settings allow you to zoom in or zoom out to increase or decrease the display magnification.
- Google™ Talkback provides audible output based on the visual information displayed on your screen.
- Switch Access allows you to navigate screens on your smartphone using external switches.
- Braille support is available using BrailleBack.
- Font customization allows you to choose small, medium, large, or huge sizes.
- Screen Reader technology lets you select the text-to-speech application that you prefer to use (if you have downloaded an alternate text-to-speech engine on Google Play™).
- Google Now™ voice assistant answers questions, makes recommendations, and performs actions.

- Voice dictation allows you to dictate text instead of typing.
- Closed or open captioned multimedia content is available. Personalize your closed caption settings by adjusting character size, color, opacity, or font.
- Display features, such as color inversion and color correction are applied across all applications.
- The touch & hold delay feature lets you increase the length of time for touch responses on the screen.
- Third party keyboards are supported.
- The ability to speak your passwords is included.
- An accessibility shortcut is available that you can use to quickly change your accessibility settings.
- Teletypewriter (TTY) support allows you to connect to a TTY device to make and receive calls from TTY devices.

For more information on the following features, visit BlackBerry Accessibility.

- Hearing aid compatibility is available for certain BlackBerry smartphone models. Compatibility ratings are available online at BlackBerry Accessibility.
- The BlackBerry Keyboard lets you type more efficiently with contextual autocorrection, next-word prediction, shortcuts, and personalized learning that gets to know the way you type. Your device gives you the option of using the touch screen keyboard, or the slide-out touch keyboard, with tactilely discernible keys.
- Keyboard shortcuts and Speed dial allow you to assign actions and phone numbers to specific keys.
- Alerts and notifications can be customized using tone, vibration, onscreen alerts, or the LED indicator.
- An integrated hands-free speakerphone is available, or you can connect your device to a hands-free headset or Bluetooth enabled headset.

Change accessibility settings

You can turn accessibility settings on or off, such as Google™ Talkback, captions, touch & hold delay, and color inversion.

1. Swipe down from the top of the screen once using two fingers, or twice using one finger.
2. Tap ⚙ > **Accessibility**.
3. Set the accessibility options switches.

Turn on Hearing Aid mode

Hearing Aid mode is designed to improve the compatibility of your device with a hearing aid equipped with a telecoil. This feature might not be supported depending on your BlackBerry device model. Hearing aid compatibility ratings are available online at BlackBerry Accessibility.

1. In the phone app, in the upper-right corner of the screen, tap ⋮.
2. Tap **Settings** > **Call settings** > **Hearing aids**.

Turn on TTY support

TTY support is designed to allow your device to connect with an external TTY device that converts received calls to text.

The TTY device that you want to connect to your BlackBerry device must operate at 45.45 bps. If your TTY device is designed for use with a 2.5-mm headset jack, you must use an adapter accessory to connect your TTY device to your device. The adapter end that plugs into the TTY device must be a male three pole mono 2.5-mm headset jack, and the end that plugs into your BlackBerry device must be a male four pole stereo 3.5-mm headset jack.

1. Connect a TTY device to your device according to the instructions that came with your TTY device.
2. In the phone app, in the upper-right corner of the screen, tap ⋮.
3. Tap **Settings** > **Call settings** > **TTY mode**.
4. Select one of the following TTY modes:
   - To turn off all TTY settings, tap **TTY Off**.
   - To turn on all TTY settings, tap **TTY Full**.
   - To turn on TTY Hearing Carry Over mode, tap **TTY HCO**.
   - To turn on TTY Voice Carry Over mode, tap**TTY VCO**.

Users

About users

The users feature lets you share your device with others while keeping your personal or work information separate. For example, users that you add to your device can't access your info, such as your email, contacts, pictures, apps, and more. By default, your device is set up with a device owner and a guest. You can also add more user profiles to your device.

To improve privacy between users, each user should set up a screen lock. A screen lock prevents another user from accessing information in a different user profile.

All user profiles use the wireless connection information set up on the device. Any changes that a user makes to some device settings, such as Wi-Fi network connections, are available or applied to all users on the device.

All users can install app updates for any user on the device.

You (device owner)

The person who sets up the device for the first time (you) is the device owner. You can add up to three users in addition to the device owner and a guest, and set whether the guest or user can use the device to make calls or send text messages. You control whether someone can add and access a user from the lock screen. You can also install app updates for all users on the device, uninstall apps from a user profile, and delete a user from the device.

Guest

You can use the guest profile to let someone borrow your device. When someone uses the guest profile, the device creates a separate space where the guest can download apps, take pictures, and use other device features. Apps and data added to your device by the guest are only available from the guest profile. When you or the guest delete the guest profile, the apps and data in the guest profile are permanently deleted from the device.

You control whether the guest can use the phone app to make and receive calls.

User

While the guest profile allows you to let someone borrow your device occasionally, you can create a user profile for someone that you share your device with frequently. A user profile creates a separate space on the device where another person can use device features and customize the device to their liking. For example, you might want to create a "kids" user profile that contains child-friendly apps. When a child wants to use your device, you can switch to the "kids" user profile and not worry that your apps or data might accidentally be deleted or changed. Apps and data added to the device by the user are only available from the user profile.

You control whether the user can use the phone app to make and receive calls and whether the user can send and receive text messages (SMS).

Allow access to guest and user profiles when your device is locked

Guests and users can access their profiles from the lock screen if you set up your device to allow this feature. This feature also lets you add a user from the lock screen without having to unlock the screen first.

1. Swipe down from the top of the screen once using two fingers, or twice using one finger.
2. Tap ⚙ > **Users** > ⋮.
3. Select the **Add users when device is locked** checkbox.

Add a user

A user profile creates a separate space on your device for another person to use and customize. For example, the user can add a Google™ account or download apps, wallpaper, and music without seeing the device owner or other users' account info, apps, and data.

1. Swipe down from the top of the screen once using two fingers, or twice using one finger.
2. Tap ⚙ > **Users** > **Add user**.
3. Tap **OK**.

4. Tap **Set up now**.
5. If necessary, to wake up your device, swipe up on the screen.
6. Complete the instructions on the screen.

Allow a user to make calls and send text messages

You can set whether a guest or user can make or receive calls when they use the guest or a user profile on your device. You can also set whether a user can send or receive text messages (SMS).

1. Swipe down from the top of the screen once using two fingers, or twice using one finger.
2. Tap ⚙ > **Users**.
3. Do any of the following:
   - Beside the guest profile, tap ⚙. Turn on the **Allow phone calls** switch.
   - Beside a user profile, tap ⚙. Turn on the **Allow phone calls and SMS** switch.

Delete a user or guest

When you delete a user from your device, you permanently delete the user's space and all of the apps and data in it. The user is no longer available from the list of users. When you delete a guest, all of the apps and data in the guest space are permanently deleted, but the guest profile remains on the device.

1. Swipe down from the top of the screen once using two fingers, or twice using one finger.
2. Tap ⚙ > **Users**.
3. Do one of the following:
   - Beside user you want to delete, tap ⚙ > **Remove user** > **Delete**.
   - Tap **Guest** > **Yes, continue**. Swipe down from the top of the screen once using two fingers, or twice using one finger. Tap ⚙ > **Users** > **Remove guest** > **Remove**.

A guest or a user can delete the apps and data from the guest space or user profile space on your device. A guest can tap ⋮ > **Delete Guest from this device**. A user can tap ⋮ > **Delete** <***userprofile***> **from this device**.

Update contact information for the device owner

You can add or change the contact information for the device owner. For example, you can change the profile picture and name that displays beside the device owner profile.

To change the device owner, you must reset the device to its factory settings and set up the device again.

1. Swipe down from the top of the screen once using two fingers, or twice using one finger.

2. Tap ⚙ > **Users** > **You (<*username*>)**.
3. Tap ✎.
4. Update your contact information.
5. Tap ✓.

Switch users

1. Swipe down from the top of the screen once using two fingers, or twice using one finger.
2. Tap ⚙ > **Users**.
3. Do one of the following:
   - Tap a user.
   - Tap **Guest**.

Backup and reset

About backing up device data

With Android™ Backup Service, you can back up your data to your Google™ account. If you must replace your device unexpectedly (for example, if your device is damaged, lost, or stolen), you can restore your data on a device running Android™.

The following types of data can be backed up to an account:

- Google Calendar™ settings
- Wi-Fi networks and passwords
- Home screen wallpapers
- Gmail™ settings
- Apps installed on Google Play™
- Display settings
- Language and input settings
- Date and time settings
- Third-party app settings and data (varies by app)

Back up device data using Android™ Backup Service

1. Swipe down from the top of the screen once using two fingers, or twice using one finger.
2. Tap ⚙ > **Backup & reset**.

3. Turn on the **Back up my data** switch.

Change the Google™ account that you use to back up device data

If you have more than one Google™ account, or if you start using a new Google™ account, you can change the account that you use to back up your data.

1. Swipe down from the top of the screen once using two fingers, or twice using one finger.
2. Tap ⚙ > **Backup & reset** > **Backup account**.
3. Tap an account. If you haven't added the account to your device yet, tap **Add account**, and then follow the prompts to add the account.

Automatically restore app data

If you uninstall an app and then reinstall it later, your device can automatically restore the app data.

1. Swipe down from the top of the screen once using two fingers, or twice using one finger.
2. Tap ⚙ > **Backup & reset**.
3. Turn on the **Automatic restore** switch.

Restore device data using Android™ Backup Service

To restore your device data using Android™ Backup Service, you must have backed up the data.

You can restore data from a previous Android™ device to a new Android™ device when you add the Google™ account that you used to back up your data.

1. On your new device, swipe down from the top of the screen once using two fingers, or twice using one finger.
2. Tap ⚙ > **Accounts** > **Add account** > **Google**.
3. Follow the prompts to add the Google™ account that you used to back up your data.

After you finish adding your account, your data is restored on your new device.

Delete your device data with a factory reset

Before you switch to a new device or give away your current device, you should delete your data. A factory reset is designed to delete all of the data on your device permanently so that it can't be recovered. The permanently deleted data includes email accounts, downloaded apps, media files, documents, browser bookmarks, and settings.

1. Swipe down from the top of the screen once using two fingers, or twice using one finger.
2. Tap ⚙ > **Backup & reset**.

3. Tap **Factory data reset** > **Reset phone**.

Update your device software

When a new device software update is available for your device, a notification appears. Updating your device software to the latest version can help your device run well and stay secure.

1. Swipe down from the top of the screen with one finger.
2. Tap the **System update** notification, and then tap **Download**.

Note: Major updates can take time to download and install and might require you to restart your device. To help prevent issues, keep your device connected to a power source and a reliable Wi-Fi network while the update is in progress.

Check for device software updates manually

1. Swipe down from the top of the screen once using two fingers, or twice using one finger.
2. Tap ⚙ > **About phone** > **System updates** > **Check for updates**.
3. If an update is available, tap **Download**.

Security

Locks, passwords, and protecting your data

There are several types of locks, PINs, and security features that you can use to help protect the data on your device.

If you use your device for work, your organization might have security rules in place. The organization might require you to enter a password to unlock your device or might prevent you from using the Smart Lock feature.

Screen lock

A screen lock helps prevent someone else from unlocking your device and accessing your data. When you set up a screen lock, you set whether the screen lock must be entered to turn on the device.

Some security features on your device, such as Smart Lock, require that you set up a screen lock before you can set up the security feature.

There are several types of screen locks to choose from. Each type is designed to provide a different level of security.

- **Password**: A secure password can contain letters, numbers, and symbols. A password is designed to be a strong screen lock that is difficult for someone else to figure out.
- **PIN**: A PIN must contain a minimum of four numbers. The more numbers there are in your PIN, the more secure your screen lock.
- **Picture**: A picture password requires you to move a number (that you choose) to a specific location (that you choose) on a picture (that you also choose). A picture password provides a convenient way to unlock your device and is difficult for someone else to figure out. If you set up a picture password, you must also set a backup screen lock in case you forget your picture password combination.
- **Pattern**: A pattern is a continuous line that connects four or more dots on a grid. You trace your pattern to unlock your device. A pattern is less secure than a password or a PIN.
- **Swipe**: A swipe gesture can unlock your device. A swipe gesture is less secure than the other types of screen locks.

Smart Lock

The Smart Lock feature lets you set up your device to remain unlocked when it's connected to a trusted Bluetooth enabled device or NFC-enabled device, when it recognizes your face or voice, or when you are carrying it in your hand, pocket, or bag. The Smart Lock feature also allows your device to remain unlocked when it's in a familiar location, such as your home or workplace.

The Smart Lock feature is a convenient way to access the data on your device, but it doesn't confirm that the device owner is the person using the device.

You must have a screen lock set up on your device before you can set up the Smart Lock feature.

Data encryption

By default, data on your device, including your account information, apps, music, pictures, and other downloaded files, is stored in a format that can be read only when your device decrypts the data. If you set up a screen lock and require that it must be entered to turn on your device, your password, PIN, or pattern is used to generate a new encryption key to decrypt your data.

SIM card PIN

You can set up a PIN for your device SIM card, which you can use to help prevent unauthorized use of your SIM card in another device. For example, if you lose your SIM card and someone tries to use it in another device, the SIM card can't be used unless the PIN is entered correctly.

Network lock and unlock codes

To use a SIM card from another service provider, for example, if you're traveling and want to use a local service provider's network, you can request unlock codes (MEP codes) from your current service provider, and then change the Phone Network Lock settings for your SIM card.

If you exceed the number of allowed attempts to enter an unlock code, your SIM card allows emergency calls only. For assistance, contact your service provider.

Google™ account and factory reset protection

The factory reset protection feature uses your Google™ account information to help protect the data on your device. If your device is lost or stolen, the factory reset protection feature is designed to prevent someone else from being able to set up your device for use, even if that person tries to reset your device to its factory settings. The device must be set up using the same Google™ account information.

To use the factory reset protection feature, you must set a screen lock and you must add your Google™ account to your device.

Set up a screen lock

Locking your device can help prevent your device from sending accidental messages or pocket dialing. Before you can unlock your device and access the data on your device, you must enter your password, PIN, picture password, or pattern.

If you use your device for work, depending on the rules set by your administrator, you might not be able to set up a screen lock that uses a pattern or a picture.

1. Swipe down from the top of the screen once using two fingers, or twice using one finger.

2. Tap ⚙ > **Security** > **Screen lock**.
3. Do one of the following:
   - To unlock your device with a password, tap **Password**.
   - To unlock your device with a numeric PIN, tap **PIN**.
   - To unlock your device using a number and picture combination, tap **Picture**.
   - To unlock your device by tracing a pattern on the screen, tap **Pattern**.
4. Set whether the screen lock is required to turn on your device.
5. Complete the instructions on the screen.

Change or remove a screen lock

You can change the type of screen lock that you use to unlock your device, as well as change the password, PIN, picture password, or pattern.

If you use your device for work, your administrator might have security rules in place that require you to have a screen lock.

1. Swipe down from the top of the screen once using two fingers, or twice using one finger.
2. Tap ⚙ > **Security** > **Screen lock**.
3. Enter your password, PIN, picture password, or pattern, and then tap **Next**.
4. Do any of the following:
   - To set up a different screen lock or change your password, PIN, picture password, or pattern, tap a type of screen lock.
   - To wake up your device without entering a password, PIN, picture password or pattern, tap **Swipe** or **None**.
5. Complete the instructions on the screen.
6. Tap **OK**.

Note: If a screen lock option isn't available, from the **Security** screen, you might need to tap **Clear credentials** first.

Set your screen lock options

After you set up a screen lock for your device, you can set up your screen lock options. For example, you can set how long your device can be inactive before it automatically locks and whether your device automatically deletes your device data if you enter your password incorrectly ten times.

1. Swipe down from the top of the screen once using two fingers, or twice using one finger.
2. Tap ⚙ > **Security**.
3. Do any of the following:
   - To lock your device automatically after a certain amount of inactive time, tap **Automatically lock**, and then tap an interval. This option doesn't apply if you have the Smart Lock feature set up.
   - To lock your device when you press the **Power on/off** key, turn on the **Power button instantly locks** switch.

- To delete your device data automatically after ten unsuccessful attempts to unlock the device, turn on the **Automatically wipe** switch.
- To display owner information on the screen when the device is locked, tap **Owner info**, and then tap **Show owner info on lock screen**. If necessary, type the info to display.
- To hide your password, PIN, or pattern so that it is not visible when you unlock your screen, turn off the **Make passwords visible** switch.

About Smart Lock

The Smart Lock feature makes it easy for you to unlock your device. You can set up your device to remain unlocked in the following situations:

- When your device is connected to a trusted Bluetooth enabled device or NFC-enabled device
- When your device is in a familiar location, such as your home or workplace
- When your device recognizes your face or voice
- When you carry your device in your hand, pocket, or bag

The Smart Lock feature can't detect who is holding your device when the device is unlocked and connected to a trusted device, in a trusted location, or passed between people while on-body detection is turned on. It might also be possible for someone who looks like you to unlock your device when you turn on the trusted face option.

If you use your device for work, depending on the rules set by your administrator, the Smart Lock feature might not be available.

Set up Smart Lock to unlock your device

Make sure that you have set a screen lock on your device. Depending on the type of Smart Lock you set up, you might need to turn on or set up other features on your device, such as Bluetooth technology, NFC, Google Maps™, "Ok Google™" voice detection, a trust agent, or a wireless network connection.

1. Swipe down from the top of the screen once using two fingers, or twice using one finger.
2. Tap ⚙ > **Security** > **Smart Lock**.
3. Enter your screen lock, and then tap **Next**.
4. Do any of the following:
   - To keep your device unlocked when it is connected to a Bluetooth enabled device, when you tap an NFC tag, or when you tap an NFC-enabled device, tap **Trusted devices**.
   - To keep your device unlocked when it detects it is at home or at another trusted location, tap **Trusted places**.
   - To unlock your device when it recognizes your face, tap **Trusted face**.
   - To unlock your device when you say "Ok Google™," tap **Trusted voice**. Turn on the **From the Google app** switch, and then turn on the **Trusted voice** switch.
   - To keep your device unlocked when you carry it on your body or in a bag, tap **On-body detection**, and then turn on the switch.
5. Complete the instructions on the screen.

Turn off Smart Lock

1. Swipe down from the top of the screen once using two fingers, or twice using one finger.
2. Tap ⚙ > **Security** > **Smart Lock**.
3. Enter your screen lock, and then tap **Next**.
4. Do any of the following:
   - Tap **Trusted devices**. Tap a device, and then tap **Delete**.
   - Tap **Trusted places**. Tap a location, and then tap **Delete**.
   - Tap **Trusted face**. Tap **Remove trusted face**, and then tap **Remove**.
   - Tap **Trusted voice**. Turn off the **Trusted voice** switch.
   - Tap **On-body detection**. Turn off the switch.

Turn off the trust agent for Smart Lock

A trust agent lets a feature bypass the screen lock when the trust agent verifies that it can trust the device environment.

If you turn off the Smart Lock feature, you should turn off the Smart Lock trust agent.

1. Swipe down from the top of the screen once using two fingers, or twice using one finger.
2. Tap ⚙ > **Security** > **Trust agents**.
3. Turn off the **Smart Lock (Google)** switch.

Protect your SIM card with a PIN

You can use a SIM card PIN to help prevent unauthorized use of your SIM card in another device. For example, if you lose your SIM card and someone tries to use it in another device, the SIM card can't be used unless the PIN is entered correctly. After you set up a PIN for your SIM card, you must enter the PIN from the lock screen to use your device.

1. Swipe down from the top of the screen once using two fingers, or twice using one finger.
2. Tap ⚙ > **Security** > **Set up SIM/RUIM card lock**.
3. Select the **Lock SIM card** checkbox.
4. Type a PIN.
5. Tap **OK**.

To remove the PIN from your SIM card, clear the **Lock SIM card** checkbox, and then type the PIN for your SIM card.

Change the PIN for your SIM card

1. Swipe down from the top of the screen once using two fingers, or twice using one finger.
2. Tap ⚙ > **Security** > **Set up SIM/RUIM card lock**.
3. Tap **Change SIM PIN**.
4. Enter the current PIN for your SIM card.
5. Enter a new PIN for your SIM card.
6. Enter the new PIN again.
7. Tap **OK**.

About smart cards

Smart cards store certificates and private keys. You can import certificates from a smart card to your device by using an external smart card reader or a microSD smart card. Private key operations such as signing and decryption use the smart card. Public key operations such as verification and encryption use the public certificates on your device.

You can use smart card certificates with third-party apps that support smart card technology. And you can use smart card certificates to send S/MIME-protected messages.

Store your smart card password on your device

You can set up your device to store your smart card password temporarily, so that you don't have to enter it as often. To remove the password from your device cache, lock your device.

1. Swipe down from the top of the screen once using two fingers, or twice using one finger.
2. Tap ⚙ > **Security** > **Smart Card**.
3. Turn on the **PIN Caching** switch.

Set or change the PIN for your smart card reader

1. Swipe down from the top of the screen once using two fingers, or twice using one finger.
2. Tap ⚙ > **Security** > **Smart Card**.
3. Tap a smart card reader.
4. Do one of the following:
   - Tap **Set PIN**.
   - Tap **Change PIN**.
5. Complete the instructions on the screen.

Troubleshooting: Locks, passwords, and protecting your data

How do I reset my screen lock if I forget it?

For security reasons, the only way that you can reset your screen lock without knowing the password, PIN, picture password, or pattern is to delete all of your device data. You can typically do this by entering an incorrect screen lock ten times. You can also reset your device to its factory settings.

If you add your Google™ account to your device, the factory reset protection feature is turned on. To set up your device again, you must add the same Google™ account. If you don't use the same Google™ account, you can't complete the setup process.

Smart Lock doesn't unlock my device as expected

Try any of the following;

- If your device doesn't unlock when you scan your face, try to improve the image Smart Lock uses to recognize your face. Tap ⚙ > **Security** > **Smart Lock** > **Trusted face** > **Improve face matching**.
- Adjust the distance between your BlackBerry device and a trusted Bluetooth enabled device. The distance of a Bluetooth connection can vary depending on your BlackBerry device model and the Bluetooth enabled device.
- If your device remains unlocked when it is close to a trusted location instead of when you are at the trusted location, try improving the accuracy of the trusted location. Delete the trusted location. Tap ⚙ > **Location** > **Mode**. Tap **High accuracy** or **Battery saving**, and then add the trusted location again. Your device might detect a trusted location outside of the physical walls of a building, such as your house. Smart Lock might keep your device unlocked when it is within an 80-meter radius of a trusted location.
- You might need to unlock your device using your screen lock the first time you connect to a trusted device or arrive at a trusted location.

Finding and protecting a lost device

What to do if your device is lost or stolen

If you have a remote device management app, such as Android™ Device Manager, set up on your device, visit the remote device management website and sign in. Depending on the remote device management app installed on your device, you might be able to:

- Lock your device

- Make your device ring
- Add a phone number or message to the home screen of your device
- View the approximate location of your device on a map
- Delete all of the data on your device

If your device is not connected to the wireless network or if data services are turned off, you should still try to lock your device and delete your device data. The next time your device connects to a wireless network, or data services are turned on, your device is designed to lock and delete all the data.

If you don't have a remote device management app set up on your device, contact your service provider or your administrator and report that your device is lost or stolen. Your service provider can lock your device remotely and delete your data. If you use your device for work, your administrator might also be able to lock your device and delete your data.

If you suspect your device was stolen and you locate your device using a remote device management website, contact the local law enforcement agency to retrieve your device. Don't try to retrieve your device on your own.

Set a device administrator

By default, the Android™ Device Manager is set up as the device administrator for your device. If you download a third-party remote device management app to help you find your device or protect your device data, you must set the app as a device administrator.

1. Swipe down from the top of the screen once using two fingers, or twice using one finger.
2. Tap ⚙ > **Security** > **Device administrators**.
3. Tap the app.

About Android™ Device Manager

Android™ Device Manager includes features designed to help you find your device and help protect the data on your device if your device is lost or stolen. To use the Android™ Device Manager website, visit https://www.google.com/android/devicemanager and sign in using your Google™ account. On the Android™ Device Manager website, you can view the approximate location of your device on a map, make it ring, lock the screen, display a phone number on the lock screen, or delete all of the data from your device.

The Android™ Device Manager app is preloaded on your device. You can change your Android™ Device Manager settings from the Security section of the Google™ Settings app.

Learn more about how to set up and use Android Device Manager at support.google.com. Search for help about Android™ Device Manager.

Turn on Android™ Device Manager settings

1. On the home screen, tap ⠿.
2. Open the Google™ Settings app.
3. Tap **Security**.

4. Do any of the following:
   - To be able to locate your device if it is lost or stolen, turn on the **Remotely locate this device** switch.
   - To be able to lock your device and delete all of your device data if it is lost or stolen, turn on the **Allow remote lock and erase** switch.

Security settings

Download apps from sources other than Google Play™

Google Play™ is the default trusted source for downloading Android™ apps onto your device.

You can set up your device to let you download apps onto your device from other websites and sources. If you want to download apps from other sources, you should also set up your device to scan for malicious app activity.

1. Swipe down from the top of the screen once using two fingers, or twice using one finger.
2. Tap ⚙ > **Security**.
3. Turn on the **Unknown sources** switch.
4. Tap **OK**.

Scan device for malicious activity

You can set up your device to scan periodically for malicious activities. Your device warns you about potentially harmful app activity.

1. On the home screen, tap ⠿.
2. Open the Google™ Settings app.
3. Tap **Security**.
4. Turn on the **Scan device for security threats** switch.

About screen pinning

Screen pinning lets you pin one app into the foreground on your device. The feature disables the ○ and □ buttons on your device so that the only way to close a pinned app is to unpin the screen. By default, you must enter your screen lock to unpin the screen.

Screen pinning allows you to let someone else use your device, for example, to play a game or view a video, without worrying that the person might close the app and access your data.

Turn on screen pinning

1. Swipe down from the top of the screen once using two fingers, or twice using one finger.
2. Tap ⚙ > **Security** > **Screen pinning**.
3. Turn on the switch.
4. To unpin a screen without entering your screen lock, turn off the **Ask for** <***Password*** | ***PIN*** | ***Picture*** | ***Pattern***> **before unpinning** switch.

To turn off the screen pinning feature, turn off the switch.

Pin a screen

Make sure that you have turned on the screen pinning feature.

1. Open an app or a screen that you want to pin to the foreground of your device.
2. Tap ☐.
3. On the app or screen that you want to pin, tap 📌.

To unpin a screen, touch and hold ◁ and ☐ at the same time. If necessary, enter your screen lock.

Install a certificate

Some Wi-Fi and VPN networks require your device to have a security certificate before the device can connect to the network. You can install a certificate to help identify your device. Typically, when you install a client certificate, a certification authority (CA) certificate is installed on your device at the same time.

1. Connect your device to your computer using a USB cable.
2. Copy the certificate or keystore to the root of the internal storage space on your device, your media card, or your Google Drive™ account.
3. Swipe down from the top of the screen once using two fingers, or twice using one finger.
4. Tap ⚙ > **Security** > **Install from SD card**.
   Your device only displays certificates and keystores that are not already installed on your device.
5. Find and tap the certificate or keystore that you want to install.
6. If necessary, type the password for the certificate or keystore, and then tap **OK**.
   After the certificate or keystore is installed, your device deletes the copy of the file on your device or media card.
7. Type a name to identify the certificate or keystore.
8. In the **Credential use** drop-down list, tap an option.
9. Tap **OK**.

Remove or turn off a certificate

When you remove a certificate that you installed, it is deleted from your device. If you require the certificate again, you must reinstall it. When you turn off a system certificate, you can turn it on again.

1. Swipe down from the top of the screen once using two fingers, or twice using one finger.
2. Tap ⚙ > **Security** > **Trusted credentials**.
3. Do one of the following:
   - To view a list of installed certificates, tap the **User** tab.
   - To view a list of system certificates, tap the **System** tab.
4. Tap a certificate.
5. Do one of the following:
   - To remove an installed certificate, tap **Remove**.
   - To turn off a system certificate, tap **Disable**.

To turn on a certificate that you turned off, on the **System** tab, tap the certificate. On the bottom of the certificate information screen, tap **Enable**.

Turn off access to the usage info for apps

Some apps and services monitor the active apps on your device. If you turn off access to this info, some apps might not work correctly.

1. Swipe down from the top of the screen once using two fingers, or twice using one finger.
2. Tap ⚙ > **Security** > **Apps with usage access**.
3. Tap an app to turn off the switch.

To turn on access, tap the app again.

Improving your security settings using DTEK by BlackBerry

The DTEK by BlackBerry app is designed to help you monitor and control the level of security on your BlackBerry device. The DTEK by BlackBerry app is preloaded on your device, and updates are available from the Google Play™ store.

Evaluating how security features are set up on your device

The DTEK by BlackBerry app evaluates how or if you have set up security features on your device, including, for example, screen lock, factory reset protection, and remote device management.

DTEK by BlackBerry assigns an overall security rating to your device along with a rating for each of the security features that it monitors. If a security feature receives a poor or fair rating, DTEK by BlackBerry recommends how you can improve your security settings to achieve a better rating.

Monitoring how apps access your data

The DTEK by BlackBerry app lets you see which third-party apps use features on your device to access your info. DTEK by BlackBerry monitors apps that:

- Take a picture or a video using the Camera app
- Read, create, edit, or delete a contact
- Access the location of your device
- Send a text message (SMS and MMS) from your device
- Turn the microphone on or off

Get the latest info about DTEK by BlackBerry at help.blackberry.com.

Legal notice

©2015 BlackBerry. All rights reserved. BlackBerry® and related trademarks, names, and logos are the property of BlackBerry Limited and are registered and/or used in the U.S. and countries around the world.

Bluetooth is a trademark of Bluetooth SIG. Android™, Google™, Google Play™ and other marks are are trademarks of Google Inc. Qualcomm and IZat are trademarks of Qualcomm Incorporated. Wi-Fi, Wi-Fi CERTIFIED Miracast, Wi-Fi Direct, and Wi-Fi Protected Setup are trademarks of the Wi-Fi Alliance. All other trademarks are the property of their respective owners.

This documentation including all documentation incorporated by reference herein such as documentation provided or made available on the BlackBerry website is provided or made accessible "AS IS" and "AS AVAILABLE" and without condition, endorsement, guarantee, representation, or warranty of any kind by BlackBerry Limited and its affiliated companies ("BlackBerry") and BlackBerry assumes no responsibility for any typographical, technical, or other inaccuracies, errors, or omissions in this documentation. In order to protect BlackBerry proprietary and confidential information and/or trade secrets, this documentation may describe some aspects of BlackBerry technology in generalized terms. BlackBerry reserves the right to periodically change information that is contained in this documentation; however, BlackBerry makes no commitment to provide any such changes, updates, enhancements, or other additions to this documentation to you in a timely manner or at all.

This documentation might contain references to third-party sources of information, hardware or software, products or services including components and content such as content protected by copyright and/or third-party websites (collectively the "Third Party Products and Services"). BlackBerry does not control, and is not responsible for, any Third Party Products and Services including, without limitation the content, accuracy, copyright compliance, compatibility, performance, trustworthiness, legality, decency, links, or any other aspect of Third Party Products and Services. The inclusion of a reference to Third Party Products and Services in this documentation does not imply endorsement by BlackBerry of the Third Party Products and Services or the third party in any way.

EXCEPT TO THE EXTENT SPECIFICALLY PROHIBITED BY APPLICABLE LAW IN YOUR JURISDICTION, ALL CONDITIONS, ENDORSEMENTS, GUARANTEES, REPRESENTATIONS, OR WARRANTIES OF ANY KIND, EXPRESS OR IMPLIED, INCLUDING WITHOUT LIMITATION, ANY CONDITIONS, ENDORSEMENTS, GUARANTEES, REPRESENTATIONS OR WARRANTIES OF DURABILITY, FITNESS FOR A PARTICULAR PURPOSE OR USE, MERCHANTABILITY, MERCHANTABLE QUALITY, NON-INFRINGEMENT, SATISFACTORY QUALITY, OR TITLE, OR ARISING FROM A STATUTE OR CUSTOM OR A COURSE OF DEALING OR USAGE OF TRADE, OR RELATED TO THE DOCUMENTATION OR ITS USE, OR PERFORMANCE OR NON-PERFORMANCE OF ANY SOFTWARE, HARDWARE, SERVICE, OR ANY THIRD PARTY PRODUCTS AND SERVICES REFERENCED HEREIN, ARE HEREBY EXCLUDED. YOU MAY ALSO HAVE OTHER RIGHTS THAT VARY BY STATE OR PROVINCE. SOME JURISDICTIONS MAY NOT ALLOW THE EXCLUSION OR LIMITATION OF IMPLIED WARRANTIES AND CONDITIONS. TO THE EXTENT PERMITTED BY LAW, ANY IMPLIED WARRANTIES OR CONDITIONS RELATING TO THE DOCUMENTATION TO THE EXTENT THEY CANNOT BE EXCLUDED AS SET OUT ABOVE, BUT CAN BE LIMITED, ARE HEREBY LIMITED TO NINETY (90) DAYS FROM THE DATE YOU FIRST ACQUIRED THE DOCUMENTATION OR THE ITEM THAT IS THE SUBJECT OF THE CLAIM.

TO THE MAXIMUM EXTENT PERMITTED BY APPLICABLE LAW IN YOUR JURISDICTION, IN NO EVENT SHALL BLACKBERRY BE LIABLE FOR ANY TYPE OF DAMAGES RELATED TO THIS DOCUMENTATION OR ITS USE, OR PERFORMANCE OR NON-PERFORMANCE OF ANY SOFTWARE, HARDWARE, SERVICE, OR ANY THIRD PARTY PRODUCTS AND SERVICES REFERENCED HEREIN INCLUDING WITHOUT LIMITATION ANY OF THE FOLLOWING DAMAGES: DIRECT, CONSEQUENTIAL, EXEMPLARY, INCIDENTAL, INDIRECT, SPECIAL, PUNITIVE, OR AGGRAVATED DAMAGES, DAMAGES FOR LOSS OF PROFITS OR REVENUES, FAILURE TO REALIZE ANY EXPECTED SAVINGS, BUSINESS

INTERRUPTION, LOSS OF BUSINESS INFORMATION, LOSS OF BUSINESS OPPORTUNITY, OR CORRUPTION OR LOSS OF DATA, FAILURES TO TRANSMIT OR RECEIVE ANY DATA, PROBLEMS ASSOCIATED WITH ANY APPLICATIONS USED IN CONJUNCTION WITH BLACKBERRY PRODUCTS OR SERVICES, DOWNTIME COSTS, LOSS OF THE USE OF BLACKBERRY PRODUCTS OR SERVICES OR ANY PORTION THEREOF OR OF ANY AIRTIME SERVICES, COST OF SUBSTITUTE GOODS, COSTS OF COVER, FACILITIES OR SERVICES, COST OF CAPITAL, OR OTHER SIMILAR PECUNIARY LOSSES, WHETHER OR NOT SUCH DAMAGES WERE FORESEEN OR UNFORESEEN, AND EVEN IF BLACKBERRY HAS BEEN ADVISED OF THE POSSIBILITY OF SUCH DAMAGES.

TO THE MAXIMUM EXTENT PERMITTED BY APPLICABLE LAW IN YOUR JURISDICTION, BLACKBERRY SHALL HAVE NO OTHER OBLIGATION, DUTY, OR LIABILITY WHATSOEVER IN CONTRACT, TORT, OR OTHERWISE TO YOU INCLUDING ANY LIABILITY FOR NEGLIGENCE OR STRICT LIABILITY.

THE LIMITATIONS, EXCLUSIONS, AND DISCLAIMERS HEREIN SHALL APPLY: (A) IRRESPECTIVE OF THE NATURE OF THE CAUSE OF ACTION, DEMAND, OR ACTION BY YOU INCLUDING BUT NOT LIMITED TO BREACH OF CONTRACT, NEGLIGENCE, TORT, STRICT LIABILITY OR ANY OTHER LEGAL THEORY AND SHALL SURVIVE A FUNDAMENTAL BREACH OR BREACHES OR THE FAILURE OF THE ESSENTIAL PURPOSE OF THIS AGREEMENT OR OF ANY REMEDY CONTAINED HEREIN; AND (B) TO BLACKBERRY AND ITS AFFILIATED COMPANIES, THEIR SUCCESSORS, ASSIGNS, AGENTS, SUPPLIERS (INCLUDING AIRTIME SERVICE PROVIDERS), AUTHORIZED BLACKBERRY DISTRIBUTORS (ALSO INCLUDING AIRTIME SERVICE PROVIDERS) AND THEIR RESPECTIVE DIRECTORS, EMPLOYEES, AND INDEPENDENT CONTRACTORS.

IN ADDITION TO THE LIMITATIONS AND EXCLUSIONS SET OUT ABOVE, IN NO EVENT SHALL ANY DIRECTOR, EMPLOYEE, AGENT, DISTRIBUTOR, SUPPLIER, INDEPENDENT CONTRACTOR OF BLACKBERRY OR ANY AFFILIATES OF BLACKBERRY HAVE ANY LIABILITY ARISING FROM OR RELATED TO THE DOCUMENTATION.

Prior to subscribing for, installing, or using any Third Party Products and Services, it is your responsibility to ensure that your airtime service provider has agreed to support all of their features. Some airtime service providers might not offer Internet browsing functionality with a subscription to the BlackBerry® Internet Service. Check with your service provider for availability, roaming arrangements, service plans and features. Installation or use of Third Party Products and Services with BlackBerry's products and services may require one or more patent, trademark, copyright, or other licenses in order to avoid infringement or violation of third party rights. You are solely responsible for determining whether to use Third Party Products and Services and if any third party licenses are required to do so. If required you are responsible for acquiring them. You should not install or use Third Party Products and Services until all necessary licenses have been acquired. Any Third Party Products and Services that are provided with BlackBerry's products and services are provided as a convenience to you and are provided "AS IS" with no express or implied conditions, endorsements, guarantees, representations, or warranties of any kind by BlackBerry and BlackBerry assumes no liability whatsoever, in relation thereto. Your use of Third Party Products and Services shall be governed by and subject to you agreeing to the terms of separate licenses and other agreements applicable thereto with third parties, except to the extent expressly covered by a license or other agreement with BlackBerry.

The terms of use of any BlackBerry product or service are set out in a separate license or other agreement with BlackBerry applicable thereto. NOTHING IN THIS DOCUMENTATION IS INTENDED TO SUPERSEDE ANY EXPRESS WRITTEN AGREEMENTS OR WARRANTIES PROVIDED BY BLACKBERRY FOR PORTIONS OF ANY BLACKBERRY PRODUCT OR SERVICE OTHER THAN THIS DOCUMENTATION.

The information provided in this guide is applicable to the following smartphone models:

- STV100-1 / RHK211LW

- STV100-2 / RHT181LW
- STV100-3 / RHL211LW
- STV100-4 / RHM181LW

BlackBerry Limited
2200 University Avenue East
Waterloo, Ontario
Canada N2K 0A7

BlackBerry UK Limited
200 Bath Road
Slough, Berkshire SL1 3XE
United Kingdom

Published in Canada