AES Corporation does not have a “user’s manual” for this device. The only manual that is available is a “service manual” because of the intended use and sale of this product. This service manual is provided below.

AES 7085-VE

VHF

SYNTHESISED

DATA TRANSCEIVER

Service Manual

AES IntelliNet®

AES Corporation
285 Newbury Street. Peabody, Massachusetts 01960-1315
Tel (978) 535-7310. Fax (978) 535-7313
Copyright 2003, All rights Reserved

TABLE OF CONTENS

1. SPECIFICATION	2
2. CONNECTIONS AND OPERATION	3
3. CIRCUIT DESCRIPTION	4-12
4. PERFORMANCE TEST AND ALIGNMENT	12
5. TEST EQUIPMENT CONFIGURATION	13
6. TRANSMITTER PERFORMANCE TEST	14-16
7. TROUBLESHOOTING	17-19
8. PROGRAMMER INSTRUCTION	20
9. PARTS LIST	22-35
10. PRINT CIRCUIT BOARD LAYOUT	36-43
11. PARTS ASSEMBLY	44-49
12. BLOCK DIAGRAM	50
13. SCHEMATICS DIAGRAM	51

1. SPECIFICATION

GENERAL SPECIFICATIONS

POWER SOURCE	+12VD.C. nominal (+10.8 to +15.6V)
TEMPERATURE RANGE	
STORAGE	80ºC maximum -40ºC min.
	25ºC nominal
OPERATING	60ºC maximum -20ºC min.
ANTENNA IMPEDANCE	50Ω
FREQUENCY CONTROL	PLL SYNTHESISER
FREQUENCIES OF OPERATION	140MHZ - 174MHZ
FREQUENCY TOLERANCE AND STABILITY	±1.5PPM
HIGH HUMIDITY	90%
CHANNEL CAPABILITY	1
NOMINAL DIMENSIONS	134 mm (L) X60 mm (W) X20 mm (H)
WEIGHT	190g

RADIO DATA TRANSCEIVER NOMINAL PERFORMANCE

PERFORMANCE SPECIFICATIONS	ETSI 300-113
RF OUTPUT POWER	5W/1W PROGRAMMABLE
MODULATION TYPE	FM
INTERMEDIATE FREQUENICES	45 MHZ
	455 KHZ
CHANNEL SPACING	12.5 KHZ , 6.25 KHZ (PROGRAMMABLE)
TRANSMIT ATTACK TIME	< 25 mS
CURRENT CONSUMPTION	
TRANSMIT	1500mA@5W, 800mA@1W
RECEIVE	85mA

2. CONNECTIONS AND OPERATION

EXTERNAL CONNECTIONS

1- 50Ω BNC SOCKET
2- 9 PIN "D" TYPE PLUG (J501)

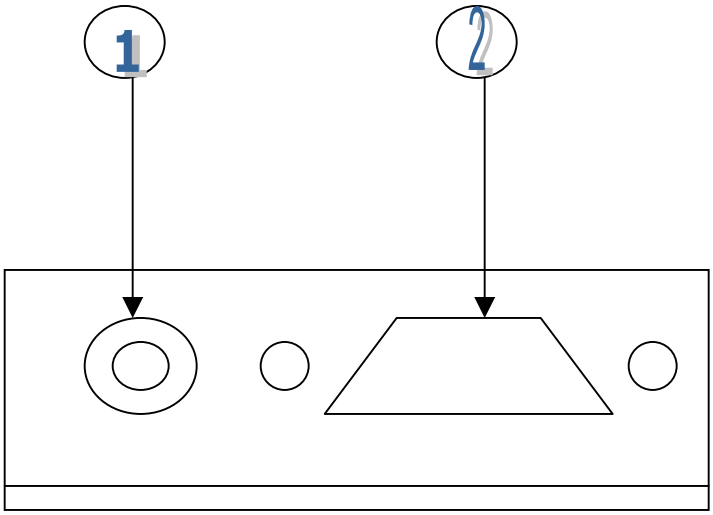

D-TYPE INTERCONNECTIONS

PIN	FUNCTION	TYPE	RANGE	DESCRIPTION
J501-1	DATA_IN	ANALOGUE	100Mv-2.5VP-P	EXTERNAL MODULATION INPUT
J501-2	DATA_OUT	ANALOGUE	1VP-P	RECEIVER AF OUTPUT
J501-3	PTT	INPUT	0V/+5V	TRANSMIT ENABLE
J501-4	GND	GND	0V	GND
J501-5	B+	V+	+13.8V	POWER SUPPLY
J501-6	CDS	OUTPUT	OPEN/SHORT	RF CARRIER DETECT
J501-7	NC	NC	NC	NC
J501-8	PGM_DATA	INPUT	0V/NC	PROGRAMMER DATA INPUT
J501-9	PGM_ENB	INPUT	0V/5V	PROGRAMMING ENABLE

3. CIRCUIT DESCRIPTION

TRANSMITTER

The transmitter is comprised of:

- Audio amplifier connections from J501 pin 1
- Frequency Synthesizer
- Transmitter
- Automatic Power Control

Audio frequency connections

Processed data from the IC504 is applied to the VCO via P305 and applied to the TCXO P701

Frequency synthesizer circuit

With data received from the EEPROM (IC502) the frequency synthesizer circuit controls and Produces the RF carrier frequency for the transmitter during transmit and the local oscillator frequency for the receiver. The frequency synthesizer circuit is comprised of:

- 12.8 MHZ Tcxo
- Voltage Controlled Oscillator (VCO) module
- Charge Pump and Loop Filter
- PLL Frequency Synthesizer
- Dual Modulus Prescaler

PLL Synthesizer

The PLL synthesizer circuit is common to both the transmitter and receiver.

The synthesizer comprises:

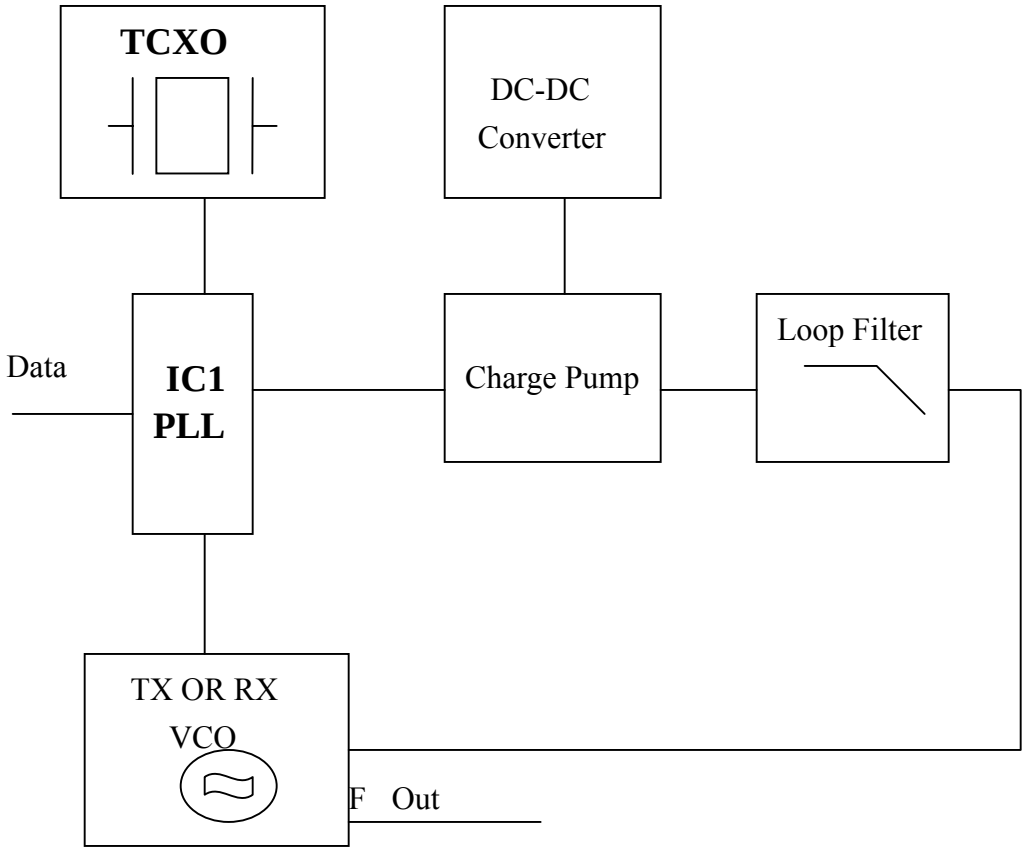

Voltage controlled oscillator module (VCO)

The module contains two VCOs. One for producing carrier frequencies during transmit (TX VCO) and one for producing the local oscillator frequency during receive (RX VCO). The module also has RX and TX power line filters. Output is for PLL IC(IC1) Fin.

RX and TX power line filters

Transistor Q308 is configured as a 5v power supply ripple filter. The filter reduces the noise on the carrier and local oscillator signals.

RX VCO

The RX VCO comprises JFET Q301, coil L301 , and varactor D301 and is configured as a Colpitts Oscillator . D301 produces a change in frequency with a change in DC voltage and is controlled by The tuning voltage signal present at the cathode. The local oscillator signal at the source of Q301 is Applied to the cascode buffer/amplifier formed by Q16 and Q17.The Local signal is applied to the Mixer when diode D2 is reverse biased and D3 is forward biased.

TX VCO

The TX VCO comprises JFET Q301,coil L303 , and varactor D302 and D303 and is configured as A Colpitts oscillator . D302 produces a change in frequency with a change in DC voltage and is controlled by the tuning voltage signal present at the cathode. The AF signal at J501 pin 1 is applied to the cathode of D303 to produce FM modulation. When diode D2 is forward biased and D3 is reversed biased the modulated RF signal at the collector of Q16 is passed to the power Amplifier and harmonic filter via the cascade buffer/amplifier (Q21 and Q22).

PLL IC

The reference frequency from the TCXO, at 12.8 MHZ, is connected to pin 1 of IC1 (MB1504) The appropriate VCO is connected to pin 11.

REFDIV divides the 12.8 MHz to produce a reference frequency (Fr) of 5 or 6. 25 kHz dependent upon channel spacing selected. VARDIV divides the prescaled VCO frequency to produce a variable frequency (Fv). Fv and Fr are fed to the phase detector.

Phase detector

When Fv=Fr, the phase detector output (pins 15 and 16,IC1) produces narrow negative pulses And Fv and Fr pulse widths are identical. When Fv□Fr pin 15 (V) pulses negative with pin 16 (R) remaining high. When Fv□Fr pin 16 (R) pulses negative with pin 15(V) remaining high. The signal at pin 15 and 16 is smoothed the loop filter and applied to the VCO.

Out-of-lock detector

The out-of-lock detector produces a series of logic level pulses when the loop is out of lock at pin 7 of IC1.The pulses at pin 7 of IC1 are buffered by Q6 and then integrated by R17 and C19. The product of the integrating circuit is fed to IC501 pin 25.

Charge Pump and Loop Filter

Transistors Q2, Q4, Q10, and associated resistors and capacitors form the charge pump and loop Filter. The phase detector output from IC1 pins 15 and 16 are combined by the charge pump to produce a 0 to 15V tuning voltage signal.

The signal is filtered by the loop filter (R13, C16 and C17) to remove any residual reference Frequency harmonics from the signal. After filtering the signal is applied to the voltage controlled Oscillator module.

DC to DC Converter

The DC-to-DC converter converts the +7.5 V to a 14-16 V supply. This is used to provide the Tuning voltage for the VCO. A wide voltage range is required to allow for the wideband operation of the radio. Q506 to Q508, and associated components, form a 200kHz oscillator. The output of the oscillator is rectified and filtered by D503, D506, C548 and C11. The resultant 16VDC is passed to R544 and then becomes the supply rail for the charge pump.

Dual modulus prescaler

The prescaler divides the VCO frequency by 64 or 65.

Transmitter

The transmitter comprises:

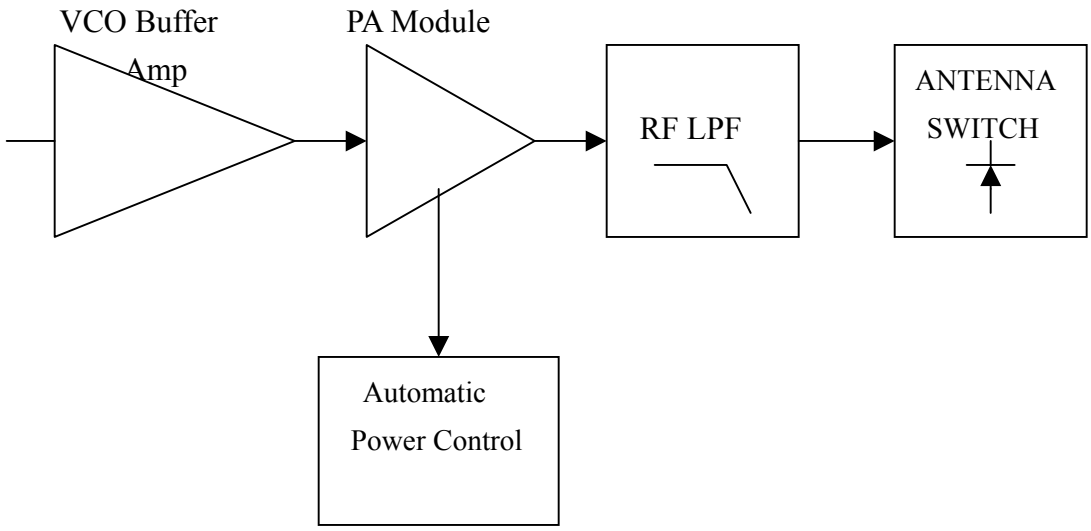

Buffer

When the radio is in transmit mode the diode D2 is forward biases enabling the modulated RF signal from the VCO to pass to the buffer/pre-amplifier Q21 and Q22 and associated components.

The output signal is passed from Q22 to IC5 via a matching network consisting of Inductor L7 and C73.

PA module

The signal is then amplified for transmission by IC5, which is a power amplifier module.

Low pass filter

The amplified RF signal is passed through the stripline coupler and is fed to the harmonic low pass filter, comprising L12 to L15 and C94-C98 and then to the antenna connector (ANT). The stripline coupler provides a sample of the RF signal for the automatic power control.

Antenna Switch

When transmitting, the diodes D5 and D6 are forward biased, allowing the RF to pass to the antenna. D6 is shorted to ground which makes L11 look open circuit (1/4 wave tuned stub). This prevents the TX signal from passing to the receiver stage.

Automatic power control (APC) circuits

The automatic power control contains the stripline coupler, diode D4, variable resistor RV1, U4A and transistors Q19 and Q23.

The RF signal present in the coupler is rectified by D4, to produce a DC voltage. This DC voltage is passed to one input of IC4A, which is a differential amplifier. In transmit mode a DC reference level for U4A is supplied by the potential divider R34/R35.

The reference level and the detected level from D4 are compared a difference signal is produced. The difference signal drives Q19, which then drives Q23. Q23 controls the supply voltage to the first amplifier stage in IC5. This control loop produces a constant power output at the antenna connector (ANT).

RV1 is used to adjust the voltage that is fed back from D4 which defines the output RF power level.

Receiver

The receiver comprises:

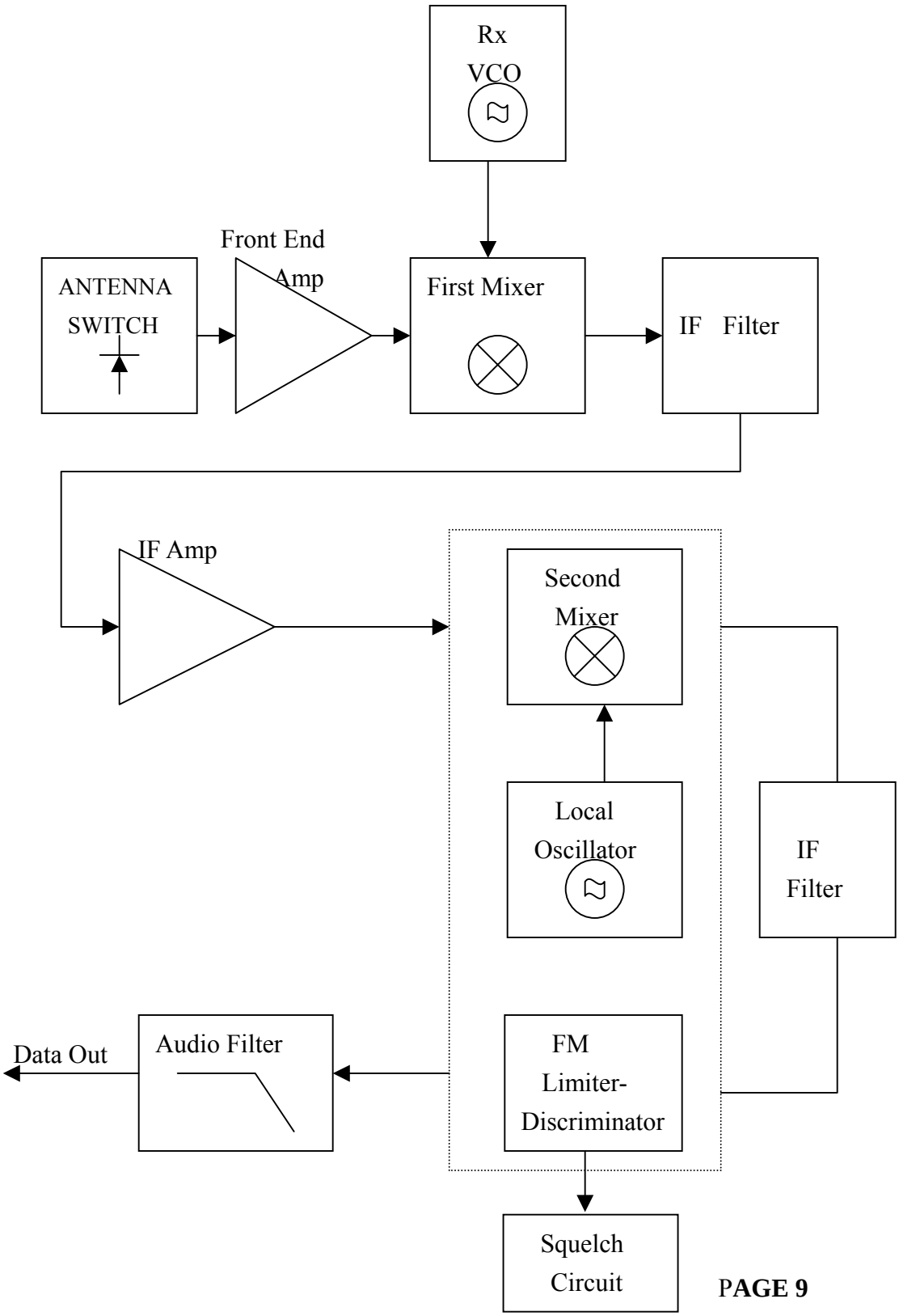

Antenna Switch

In receive, the diode D5 and D6 are reverse biased. L11 is now in circuit, passing the signal from the antenna to the front end without signal loss.

Front End

The receiver signal is routed to pin 1 of the RF Front End module. It passes through the band pass filter consisting of C800 to C808/L800 to L803.

Diode D800 serves as protection from RF overload from nearby transmitters.

The input signal is coupled to the base of Q800, which serves as an RF amplifier.

The output of Q800 is then coupled to a second band pass filter consisting of C814 to C822 / L804 to L806.

The output of the front end module, pin6, is then coupled to the double-balanced mixer IC8.

The receiver front end module is factory pre-tuned and requires no adjustment.

Repair is effected by replacement of the entire module.

First Mixer

IC8, 2-pole crystal filters XF1 and XF2 and coils L16 and L18 form the First Mixer and First IF Filter.

IC8 is a self-contained double balanced mixer. The RF signal, from the front end is applied to pin 4 and the VCO local oscillator signal is applied to pin 1.

The difference frequency of 45 MHz is taken from pin 5 and is filtered by the crystal filters XF1 and XF2. The tuned circuits L16 and L18 and associated components provide matching of the crystal filters to ensure a good pass-band response and selectivity.

The IF signal is amplified by Q24 and passed to the FM Detector IC.

Second mixer, Second IF, FM detector

The output of the IF amplifier is fed into the narrowband FM IF Integrated Circuit, IC6 (MC3371). This is a single conversion FM receiver which contains the second mixer, second IF amplifier, and FM detector.

Crystal X1, connected to pin 1 of IC6, determines the second local oscillator frequency. In this case the crystal has a frequency of 44.545MHz. The first IF signal is applied to the mixer and resultant frequency of 455KHz, is the difference between the IF signal and second local oscillator.

The 455KHz IF signal is output from pin 3 and is applied to a 455KHz band-pass filter, CF1 (12.25 kHz channel spacing) or CF2 (6.25 kHz channel spacing). The selection of the filters is accomplished by diodes D13 (input) and D14 (output) whose bias is controlled by software and applied to the diodes from pin 21 of IC501.

The output of CF1/CF2 is passed via pin 5 to a high gain IF amplifier coupled to the adjustable quadrature detector T2 (pin 8). Any detected signal is produced at pin 9 of IC6 and applied to the Receiver Audio Circuit and the Mute (Squelch) Circuit.

Squelch (MUTE) Circuit

The noise detect circuit in conjunction with IC6 consists of diode D11 and RV2.

Any noise signal is amplified by IC6 internal noise amplifier rectified by D11 .D11 Signal is applied to pin12 of IC6. The squelch trigger output (pin 14,IC6) is applied to the pin 6 of J501.

When noise is present, the voltage at pin 12 of IC6 is less than 0.7V. The squelch trigger output is 0V(logic 0) It's make pin 6 of J501 open state.

When no noise is present, the voltage at pin 12 of IC6 exceeds 0.7v and pin 14 of IC6 IS AT 5v(logic 1). This make pin 6 of J501 short state.

Carrier Detect

A Carrier Detect (MUTE DETECT) output is available on pin 6 of J501.

AF Output Low Pass Filter

A low pass filter formed by C134, C135 and R82 removes any extraneous 455kHz energy from the AF output of the FM receiver chip (pin 9 of IC6).

The filtered signal is passed to pin 2 of J501.

Micro controller

The PIC 16C57 microcontroller IC controls the programmable features and frequency synthesizer data.

Programming Mode

The programming mode allows the user to retrieve or program TX/RX frequencies, HI/LO power Setting and channel spacing, when pin 9 of J501 is set to ground. Programming mode will Inhibit, Serial communications can then be made in order to read/program the on- board EEPROM (IC502)which contains radio- specific data.

EEPROM

Relevant channel information, such as RX / TX frequencies, is stored in the EEPROM (IC502) which is a 93C46. This information may be programmed and erased via the D- type socket. The EEPROM has 1024 (8x128) capacity and is written serially.

Power supply circuit

The data radio is supplied with a nominal + 13.8V dc power supply input from external equipment which is filtered using C532 ,L501 and C533.This supply is converted into three separate voltage levels on the board using the switching transistor Q506 and associated components .

The +13.8Vdc supply and Q506 switching waveform are summed using D503 to supply a boosted voltage supply, which is regulated at +16V using Zener diode D506. This supply is used as the supply for the tuning voltage for the VCOs.

The +6V line is regulated by Zener diode D505 and filtered using L503 and C538.This +6V line is fed to the RF circuit and is regulated to +5V using two regulators on the board.

4. PERFORMANCE TEST AND ALIGNMENT

The alignment and performance test procedures assume the use of the following equipment.

Discrete test equipment

Volt Meter
RF Power Meter.
DC Power Supply, 0-15V 2A min
Oscilloscope, 20 MHz dual beam
RF Frequency Counter,
100 kHz - 600 MHz
AF Signal Generator 0 – 20 kHz
RF Signal Generator
SINAD Meter
Modulation Meter
Audio Power Meter

Spectrum Analyzer and notch filter (option)
Coupler (20dB isolation)

5. TEST EQUIPMENT CONFIGURATION.

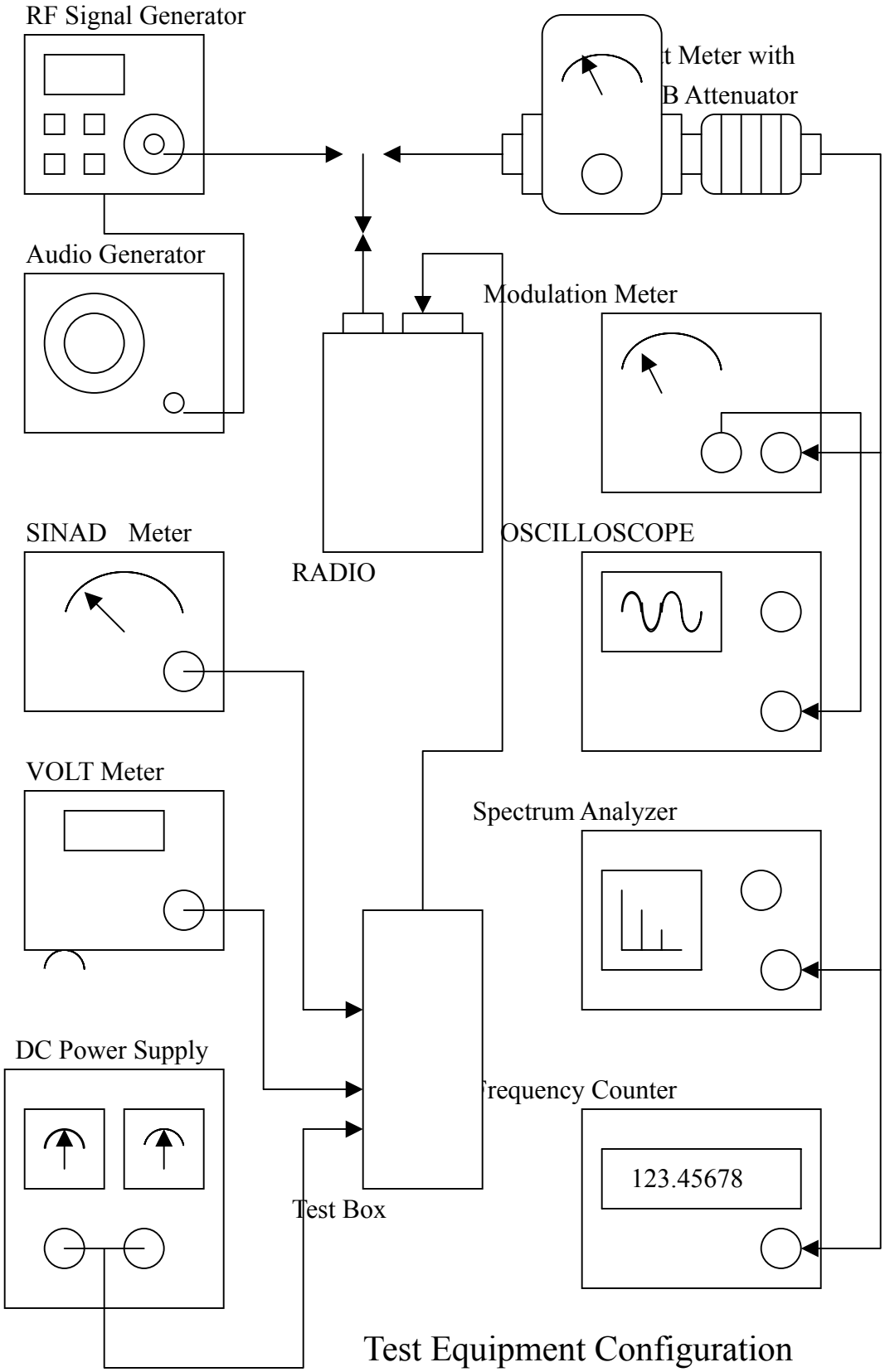

Test Equipment Configuration

6. TRANSMITTER PERFORMANCE TESTS

Power Output

1. Set the power supply voltage to 13.8V DC and monitor the voltage during transmit.
2. Switch data radio TX and check and record the output power. The nominal output power is adjustable between 1 and 5W depending on the programming.
3. Set the PTT switch to OFF.

Peak Deviation

1. 1. Connect the oscilloscope to the output of the modulation meter.
2. Set the AF signal generator to 100 Hz at 5Vpeak–to-peak and connect to DATA _IN Line (pin 1 of J501)
3. Switch data radio to TX and observe the oscilloscope display to check that the 100Hz tone is a square wave.
4. Using the AF signal generator, sweep from 100 Hz to 3 kHz and record the peak deviation.
5. Check the peak deviation for appropriate channel spacing as follows:
   For 12.5 kHz channel spacing, Peak deviation is not greater than 2.5 kHz.
   For 6.25 kHz channel spacing, Peak deviation is not greater than 2 kHz.

Spectrum Test

It may be necessary to notch the fundamental signal during this test.

1. Connect a spectrum analyzer and RF power meter to the antenna socket.
2. Switch data radio to TX. Observe the output spectrum on the spectrum analyzer.
3. Adjust notch filter to minimize the carrier. All spurious and harmonics signals should be below-36 dBm up to 1 GHz and below –30 dBm between 1 and 4 GHz.
4. Switch off the data radio transmit control.

Receiver Performance Tests

Sensitivity

The SINAD performance test may be used to test the sensitivity of the receiver.

1. Connect the RF signal generator to the data radio BNC antenna connector.
2. Set the RF signal generator to the receive frequency .
3. Connect the leads of the SINAD meter between 0 V and pin 2 on J501.
4. Set the deviation to 60% of the peak system deviation.
5. Set the AF generator to 1 kHz.
6. Adjust the RF signal generator level until the SINAD Meter reads 12 dB.
7. Check that the signal generator RF level is less than 0.35uV pd (-116 dBm).

Transmitter Alignment

Automatic Power Adjustment

Transmit periods longer than 3 minutes are to be avoided.

1. Switch to data radio to TX.
2. Adjust RV1 to give the appropriate transmit power.
3. Record the transmit power set.
4. Switch the data radio to transmitter OFF.

Frequency accuracy

1. Whilst transmitting, measure the transmit frequency using the RF frequency counter.
2. On the TCXO PCB, adjust trimmer capacitor VC700 so that frequency is as close as possible to the exact required transmit frequency. Ideally it should be within 100 Hz at room temperature.

Receiver Alignment

Important note: Before setting up the receiver it is important to check the frequency accuracy alignment is correct as described in the transmitter alignment section.

RF tuning

1. Connect an RF signal generator and SINAD voltmeter.
2. Set the RF signal generator to the receive channel frequency and set to 60□deviation.
3. Set the AF signal to 1 kHz.
4. Set the RF level to 1 mV pd (- 47.0 dBm)
5. Adjust T2 for a maximum audio output (viewed on oscilloscope).
6. Adjust L16 and L17 for lowest distortion; this is normally less than 3□.
7. Check for an RF voltage signal level of 0.35uV pd (- 116dBm) and a SINAD meter Reading greater than 12 dB.

Repeat steps 7 to 9 as necessary.

Squelch／Carrier Detect Adjustment

1. Set the RF signal generator to the receiver frequency with 60□deviation. Set the AF
   a. Signal to 1 kHz
2. Set RF input level to give -115 dBm.
3. Adjust RV2 until CDS J501 pin 6 changes state from “HIGH” to “LOW”.
4. Reduce RF input level to –120dBm and check that CDS line goes HIGH . Switch off the RF generator and disconnect the test equipment.

Modulation Deviation Adjustment

1. Connect a power meter, modulation meter and oscilloscope to radio.
2. The radio should be programmed to contain a channel with a frequency in the middle the band of interest with an RF power setting of 1 W.
3. Switch the data radio ON.
4. Inject a 1Vrms(3VP-P) SINE wave signal at a frequency of 100Hz into pin 1 of J501
5. Set the data radio to TX
6. Observe the oscilloscope display to check that the 100Hz tone is a square ware by tuning RV502.
7. Whilst observing the oscilloscope, adjust the deviation and balance potentiometers. RV501 and RV502 to obtain a good square at the following deviation:
   12.5 kHz channel spacing <= 2.5 kHz dev
   6.25 kHz channel spacing <= 2 kHz dev
8. It may be necessary to alternate the adjustment of the two potentiometers.
9. Sweep the signal generator between 100Hz and 3kHz. Record the peak deviation.
   The peak deviation should be as above. If necessary adjust the potentiometers to achieve this.
10. Switch to RX.

7. TROUBLESHOOTING

This section includes voltages, which should assist the engineer to isolate and repair a fault.

Voltage measurements should be made using a high-impedance voltmeter and the values given are with respect to ground.

Careful alignment, using suitable test equipment, and quality interface cables should ensure that the radio meet their specified performance.

Voltage Charts

Measurement Condition: 162.8750MHZ, 13.8V supply, RX Carrier Present.

Transistors.

Ref. No.	RX			TX		
	B	C	E	B	C	E
Q2	15.72	5.67	15.88	15.72	5.33	15.88
Q4	0	5.67	0	0	5.33	0
Q6	4.02	0	4.14	4.02	0	4.14
Q8	0.48	1.96	0	0.48	1.96	0
Q9	4.81	5.02	4.14	4.81	5.02	4.14
Q10	3.77	15.28	3.66	3.77	15.28	3.66
Q11	6.68	0	6.82	0	5.61	6.66
Q12	0	6.68	0	0.72	0	0
Q14	4.63	0	5.03	4.3	4.92	5.02
Q15	0	4.86	5.02	5.02	0	5.02
Q16	2.63	4.98	1.86	2.63	4.98	1.86
Q17	0.89	1.7	0.12	0.89	1.7	0.12
Q18	0	0	0	0	4.76	4.90
Q19	0	13.8	0	1.16	12.8	0.63
Q21	0	0	0	0.43	2.05	0
Q22	0	0	0	2.53	4.72	2.05
Q23	13.72	0	13.8	13.25	4.49	13.8
Q24	0.7	3.94	0	0	0	0
Q25	0.68	0	0	0	7.73	0
Q31	5.0	0	0	5.0	0	0
Q32	5.0	0	0	5.0	0	0
Q33	5.0	0	0	5.0	0	0
Q34	0	0	0	0	0.72	0
Q35	0	0	0	0.72	0	0
Q502	4.38	5.04	5.06	4.38	5.04	5.06
Q503	0.74	0	0	0	5.05	0
Q505	0	4.65	0	0.72	0	0
Q506	13.22	7.5	13.8	13.22	8.24	13.8
Q507	0.11	11.92	0	0.03	10.6	0
Q508	0.57	0.11	0	0.51	0.03	0
Q509	0	0	0	5.0	0	0
Q512	5.0	0	0	0	0	0

Integrated Circuits

RECEIVER										
Pin	IC1	IC2	IC5	IC6	IC8	IC501	IC502	IC504	IC508	U4
1	1.92	6.82	0	4.25	0	0	0	2.49	5.03	0
2	1.98	0	0	3.65	0	5.05	0	2.48	5.03	0
3	0.48	5.02	0	3.53	0	0	5.05	2.26	0	0
4	4.14		13.8	4.38	0	0	0	5.05	5.05	0
5	0		0	3.34	0	0	0	2.27	5.05	0
6	0			3.32	0	5.05	0.97	2.48		0
7	4.12			3.33		4.58	0	2.49		0
8	2.87			4.41		0	5.05	2.48		0
9	0			1.64		0		2.48		
10	0			0.62		0		2.43		
11	0			2.97		1.07		0		
12	3.98			1.33		0.05		2.24		
13	0			3.20		0.17		2.49		
14	0			3.22		0		2.49		
15	3.67			0		0				
16	0			1.71		0				
17						5.04				
18						0				
19						0				
20						4.97				
21						4.98				
22						0				
23						0				
24						0				
25						0				
26						1.6				
27						2.1				
28						5.04				

Integrated Circuit Voltages (Receive)

Integrated Circuits

TRANSMIT										
PIN	IC1	IC2	IC5	IC6	IC8	IC501	IC502	IC504	IC508	U4
1	1.92	6.82	0	0	0	0	0	2.49	0.5	3.7
2	1.98	0	4.49	0	0	5.04	0	2.48	0.5	0.17
3	0.48	5.02	5.56	0	0	0	5.05	2.26	0	0.11
4	4.14		13.8	0	0	0	0	5.05	0.3	0
5	0		1.78	0	0	0	0	2.27	5.05	0.53
6	0			0	0	0.3	0.97	2.48		0.48
7	4.12			0		4.58	0	2.49		3.96
8	2.87			0		0	5.05	2.48		4.93
9	0			0		0		2.48		
10	0			0		0		2.43		
11	0			0		0		0		
12	3.98			0		0		2.24		
13	0			0		0		2.49		
14	0			0		5.03		2.49		
15	3.67			0		0				
16	0			0		0				
17						5.04				
18						4.98				
19						0				
20						0				
21						4.97				
22						4.98				
23						0				
24						0				
25						0				
26						1.6				
27						2.10				
28						5.04				

Integrated Circuit Voltages (Transmit)

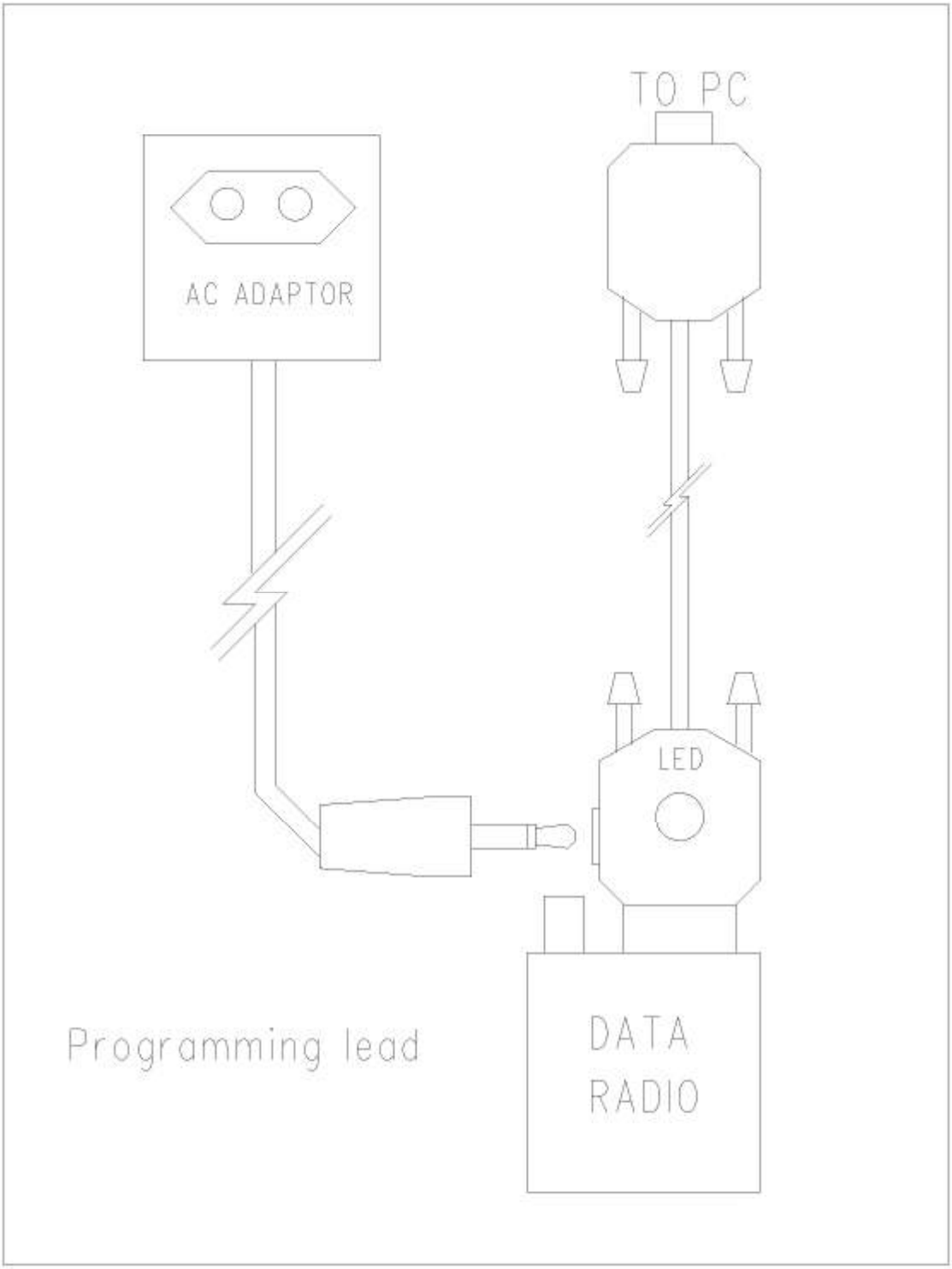
TO PC
AC ADAPTOR
LED
Programming lead
DATA
RADIO

This page intentionally left blank.

7085-VE Revised: July 22, 2003
Revision:

Bill Of Materials July 22, 2003 17:04:58 Page 1

Item	Quantity	Reference	Part
1	11	C1,C82,C126,C131,C152, C502,C515,C517,C518,C521, C522	470P
2	7	C2,C550,C552,C553,C554, C555,C556	1U/Y5V 0805
3	44	C3,C5,C7,C8,C12,C25,C33, C41,C43,C44,C45,C47,C48, C51,C52,C57,C66,C72,C75, C77,C78,C83,C84,C85,C86, C93,C102,C104,C105,C106, C118,C127,C301,C307,C313, C314,C316,C317,C318,C325, C326,C328,C545,C816	102P
4	4	C4,C10,C311,C312	5P
5	6	C6,C18,C27,C37,C153,C543	106P/1206
6	1	C9	475P/1206
7	1	C11	105P 25V/1206
8	1	C15	1U/T
9	3	C16,C149,C534	104P/X7R 0805

Item	Quantity	Reference	Part
10	10	C17,C21,C31,C64,C142, C143,C148,C151,C536,C910	103P
11	20	C19,C42,C46,C58,C62,C67, C81,C117,C144,C145,C146, C147,C324,C329,C503,C542, C544,C546,C557,C906	104P
12	7	C24,C94,C98,C101,C113, C141,C302	15P
13	3	C26,C306,C315	2P
14	2	C28,C154	33U/6.3V/EC/SMT/B-CASE
15	1	C32	100U/6.3V/EC/SMT/D-CASE
16	6	C53,C68,C138,C308,C516, C523	47P
17	3	C54,C87,C89	27P
18	2	C56,C124	105P/0805
19	2	C65,C327	335P/1206

Bill Of Materials July 22, 2003 17:04:58

Item	Quantity	Reference	Part
20	1	C70	3P
21	8	C71,C79,C80,C99,C303, C510,C804,C806	NU
22	10	C73,C91,C95,C96,C97,C137, C803,C807,C813,C814	33P
23	1	C74	10U/16V/EC/SMT/B-CASE
24	1	C88	10P
25	1	C92	12P
26	2	C103,C119	82P
27	2	C107,C538	100U/16V/EC/SMT/D-CASE
28	3	C108,C504,C505	22P
29	4	C111,C801,C812,C822	39P
30	4	C112,C304,C305,C309	4P
31	2	C114,C817	56P
32	1	C125	104P/X7R 0603
33	1	C134	223P/X7R

Item	Quantity	Reference	Part
34	3	C135,C511,C903	220P
35	1	C150	47U/10V/EC/SMT/C-CASE
36	8	C160,C161,C162,C524,C802, C808,C811,C818	100P
37	1	C310	1P
38	1	C335	8P
39	1	C336	9P
40	2	C532,C533	47U/16V/EC/SMT/D-CASE
41	1	C537	10U/16V(T) B-CASE
42	1	C548	4.7U/50V/EC/SMT/C-CASE
43	1	C800	560P
44	1	C805	6P

Bill Of Materials July 22, 2003 17:04:58

Item	Quantity	Reference	Part
45	1	C815	150P
46	1	C821	270P
47	2	C901,C904	105P/X7R 0805
48	1	C902	152P/X7R
49	1	C905	683P/X7R 0805
50	1	C907	820P
51	1	C908	152/X7R
52	1	C909	120P
53	1	C911	392P/X7R
54	1	C912	332P/X7R
55	1	CF1	CFW455E
56	1	CF2	CFW455HT
57	3	D2,D3,D12	1SS314
58	1	D4	1SS154
59	2	D5,D6	RLS135

Item	Quantity	Reference	Part
60	1	D7	1N4004 SMT
61	4	D8,D11,D501,D504	RLS4148
62	2	D13,D14	1SS181
63	3	D301,D302,D303	1SV215
64	1	D502	RLZ4.3B
65	1	D503	BAV99LT1
66	1	D505	RLZ6.2B
67	1	D506	RLZ16B
68	1	D507	RLZ3.0B
69	1	D800	1SS226
70	1	IC1	MB1504 SMT
71	2	IC2,IC507	XC62AP5002MR

Bill Of Materials July 22, 2003 17:04:58

Item	Quantity	Reference	Part
72	1	IC5	M67748H
73	1	IC6	MC3371 SMT
74	1	IC8	LRFMS-1L
75	1	IC501	PIC16C57/XT SMT
76	1	IC502	93C46 SMT
77	2	IC504,U901	TL064CD SMT
78	1	IC508	ELM7S32
79	1	J501	CONNECTOR DB9
80	1	J901	PCB JACK 6PIN 2.54MM
81	1	JP101	BNC
82	3	L2,L3,L24	1UH TDK
83	3	L4,L5,L7	82NH
84	6	L8,L17,L302,L304,L309, L310	2.2UH TDK
85	3	L11,L13,L14	0.45*2.3*8T CW SMT

Item	Quantity	Reference	Part
86	2	L12,L15	0.45*2.3*7T CW SMT
87	2	L16,L18	45M
88	2	L19,L20	0.15UH TDK
89	1	L311	0.82UH TDK
90	2	L312,L313	MDS-0605U-3.5T
91	2	L501,L503	100UH SMT
92	1	L502	560UH SMT
93	7	L800,L801,L802,L803,L804, L805,L806	0.45*1.5*6T CCW SMT
94	1	P301	1
95	1	P302	2
96	1	P303	3
97	1	P304	4

Bill Of Materials July 22, 2003 17:04:58

Item	Quantity	Reference	Part
98	1	P305	5
99	1	P306	6
100	1	P307	7
101	3	Q2,Q6,Q502	A1037K
102	13	Q4,Q9,Q10,Q12,Q19,Q25, Q34,Q35,Q308,Q503,Q505, Q507,Q508	BC847A
103	5	Q8,Q16,Q17,Q21,Q22	2SC3838
104	2	Q11,Q15	DTA114EK
105	1	Q14	BCW68G
106	1	Q18	DTA123JK
107	2	Q23,Q506	2SB798
108	1	Q24	MMBTH10
109	4	Q31,Q32,Q303,Q304	DTC114EK
110	3	Q33,Q509,Q512	2N7002

Bill Of Materials July 22, 2003 17:04:58

Item	Quantity	Reference	Part
111	2	Q301,Q302	MMBFJ310LT1
112	1	Q800	2SC3356
113	22	R1,R5,R11,R17,R25,R39, R41,R42,R46,R66,R71,R87, R92,R93,R101,R102,R103, R305,R308,R503,R521,R524	10K
114	8	R3,R20,R64,R502,R523, R525,R531,R903	100K
115	8	R4,R8,R26,R91,R94,R96, R98,R538	22K
116	2	R9,R541	3K9
117	7	R10,R19,R47,R48,R51,R89, R542	100R
118	2	R13,R21	1K2
119	4	R14,R82,R313,R518	2K7
120	1	R15	7.5K

Bill Of Materials July 22, 2003 17:04:58

Item	Quantity	Reference	Part
121	1	R16	33K
122	1	R18	91K
123	9	R24,R43,R61,R73,R81,R513, R515,R543,R548	4K7
124	1	R27	10R
125	1	R28	5K6
126	16	R31,R32,R33,R35,R45,R49, R57,R75,R76,R84,R501, R504,R505,R552,R553,R902	1K
127	11	R34,R526,R527,R528,R532, R533,R534,R537,R701,R702, R905	47K
128	1	R37	6R8
129	3	R40,R52,R56	470K
130	2	R44,R72	2K2
131	1	R50	150R
132	1	R53	51R

Item	Quantity	Reference	Part
133	5	R54,R55,R309,R517,R535	0R
134	3	R65,R554,R555	470R
135	1	R77	560K
136	1	R78	560R
137	1	R79	390R
138	4	R85,R86,R907,R908	82K
139	1	R97	56K
140	1	R104	2K4
141	2	R302,R306	47R
142	2	R303,R307	330R
143	1	R506	1M
144	2	R544,R545	680R
145	1	R800	820R
146	2	R801,R906	6K8
147	1	R802	3K3

Bill Of Materials July 22, 2003 17:04:58

Item	Quantity	Reference	Part
148	1	R803	2R2
149	1	R804	180R
150	1	R901	16K
151	1	R904	24K
152	2	R909,R910	75K
153	1	R911	20K
154	1	R912	220K
155	1	R913	200K
156	1	R914	130K
157	1	RP1	10K*4 SMT
158	2	RV1,RV2	47KB SMT
159	3	RV501,RV502,RV503	10KB SMT
160	1	RV700	100KB SMT
161	1	SW1	DIGITAL SW 16CH SMT
162	1	T2	0766

Bill Of Materials July 22, 2003 17:04:58

Item	Quantity	Reference	Part
163	1	TP1	TP
164	1	TP2	VCO
165	1	U2	STRIP1
166	1	U4	LM358 SMT
167	1	U701	12.8MHZ TCXO/SMT
168	1	X1	44.545MHZ UM1
169	1	X501	3.58MHZ 3X9
170	2	XF1,XF2	45N15B UM1
168	1	COVER	TOP
169	1	COVER	BOTTOM
170	3	CRYSTAL WASHER	UM1 TYPE
171	1	MAIN PCB	110mm*55mm*1.0mm FR4
172	1	VCO PCB	27mm*20mm*1.0mm FR4
173	1	FRONT-END PCB	40mm*9mm*1.0mm FR4
174	1	TCXO PCB	20mm*11mm*1.0mm FR4
175	1	FILTER PCB	18mm*12mm*1.0mm FR4

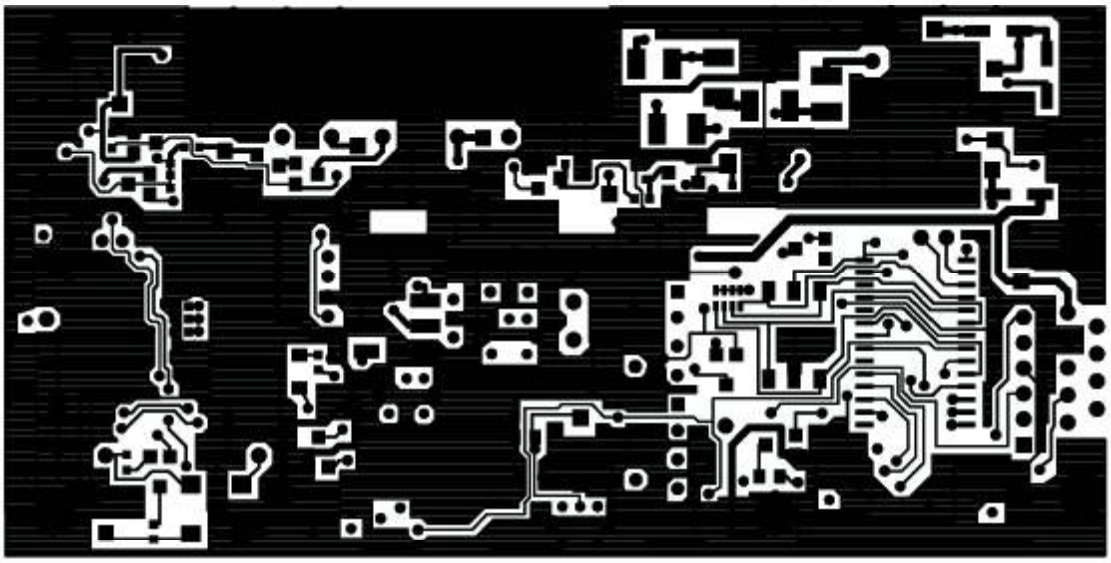

MAIN PCB TOP LAYER 1.0m/m FR4

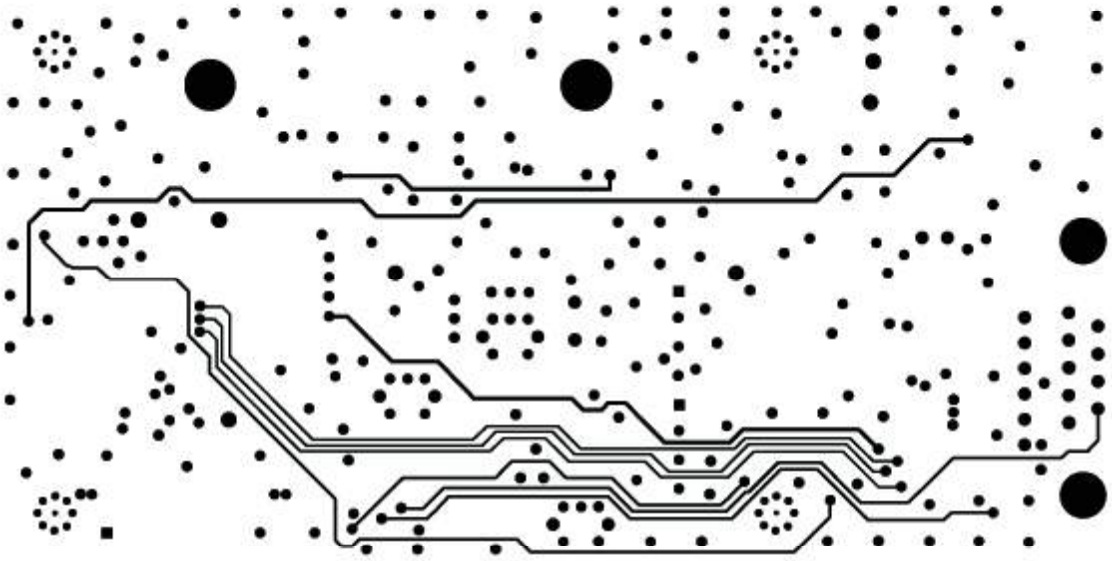

MAIN PCB INNER LAYER 1

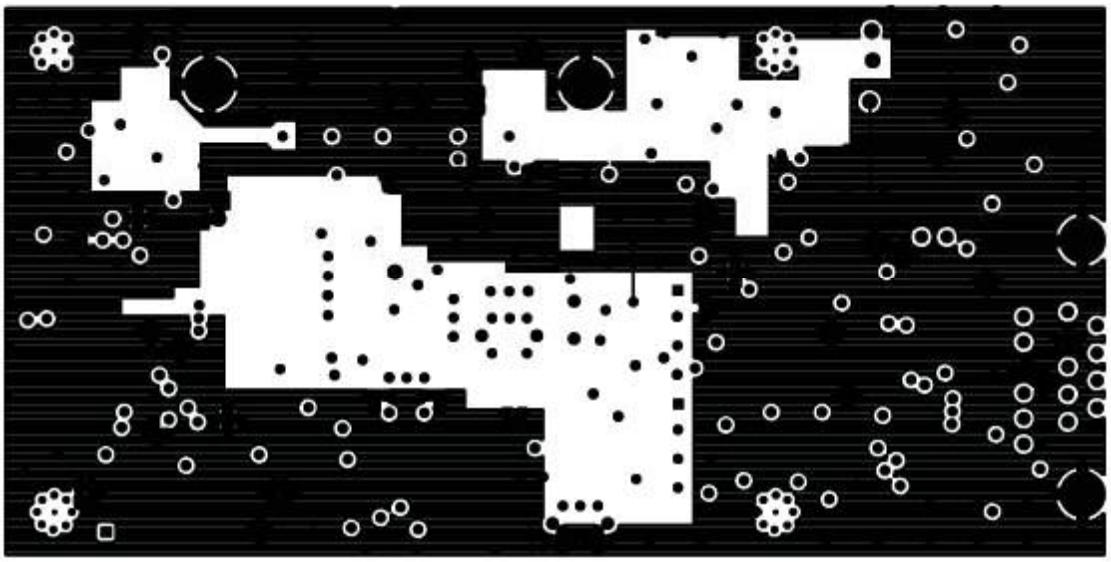

MAIN PCB INNER LAYER 2

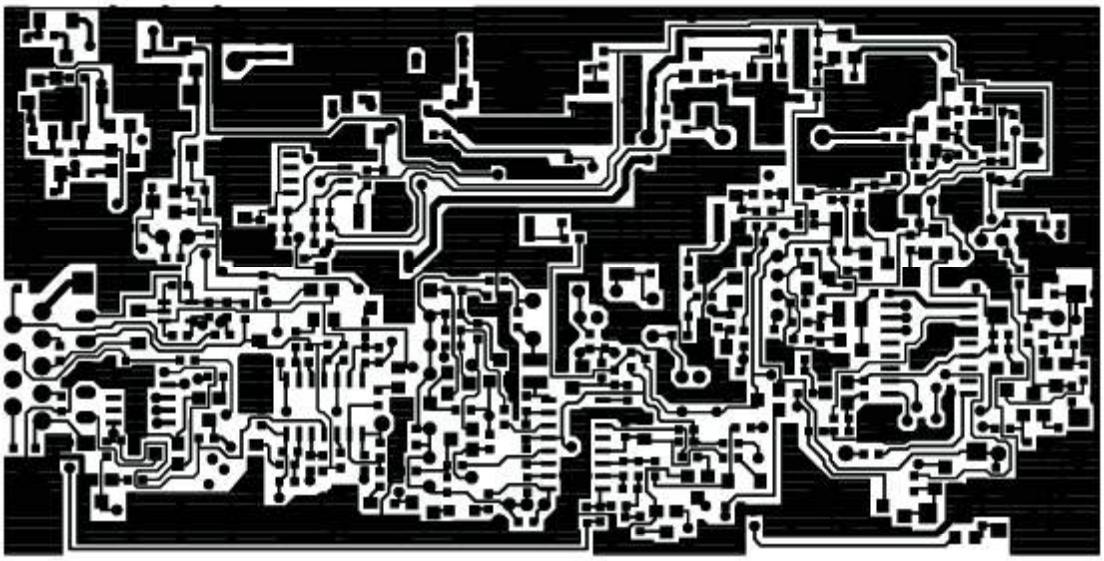

MAIN PCB BOTTOM LAYER

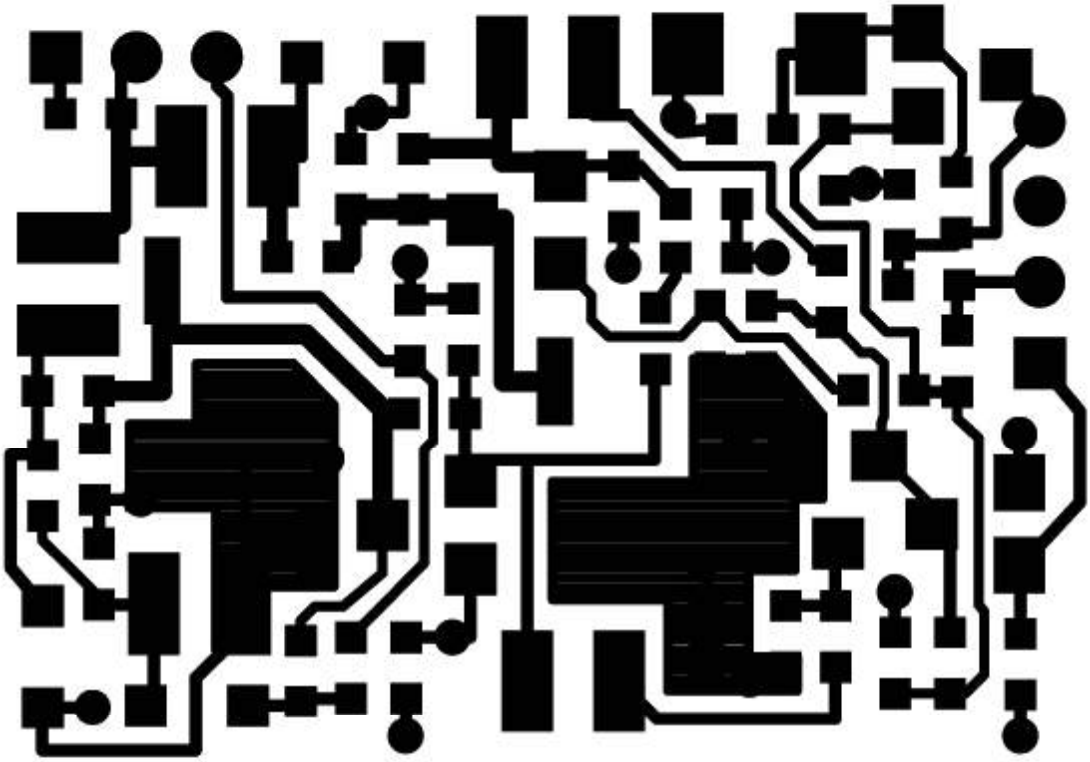

VHF VCO PCB TOP VIEW LAYOUT

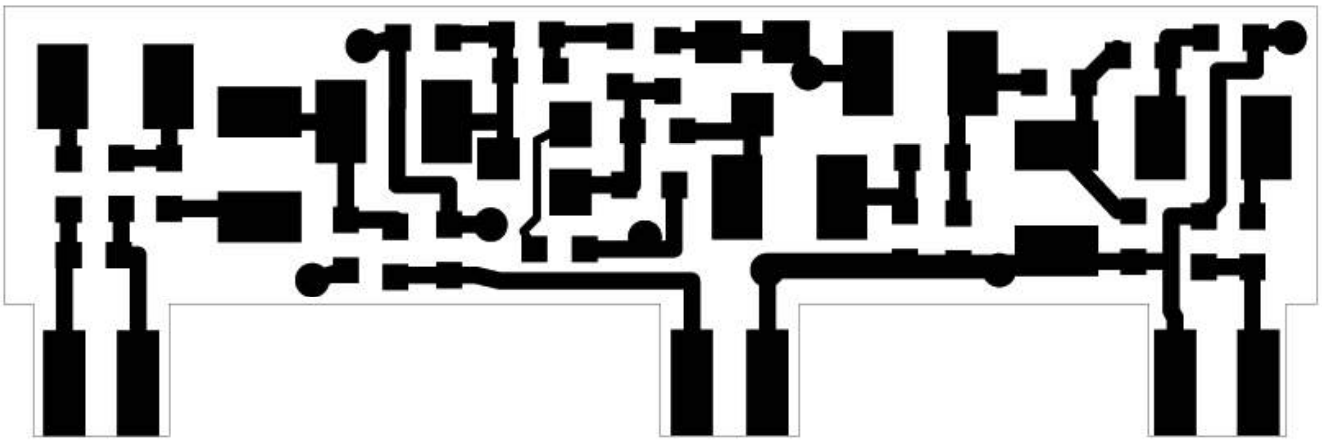

VHF FRONT-END PCB LAYOUT TOP VIEW

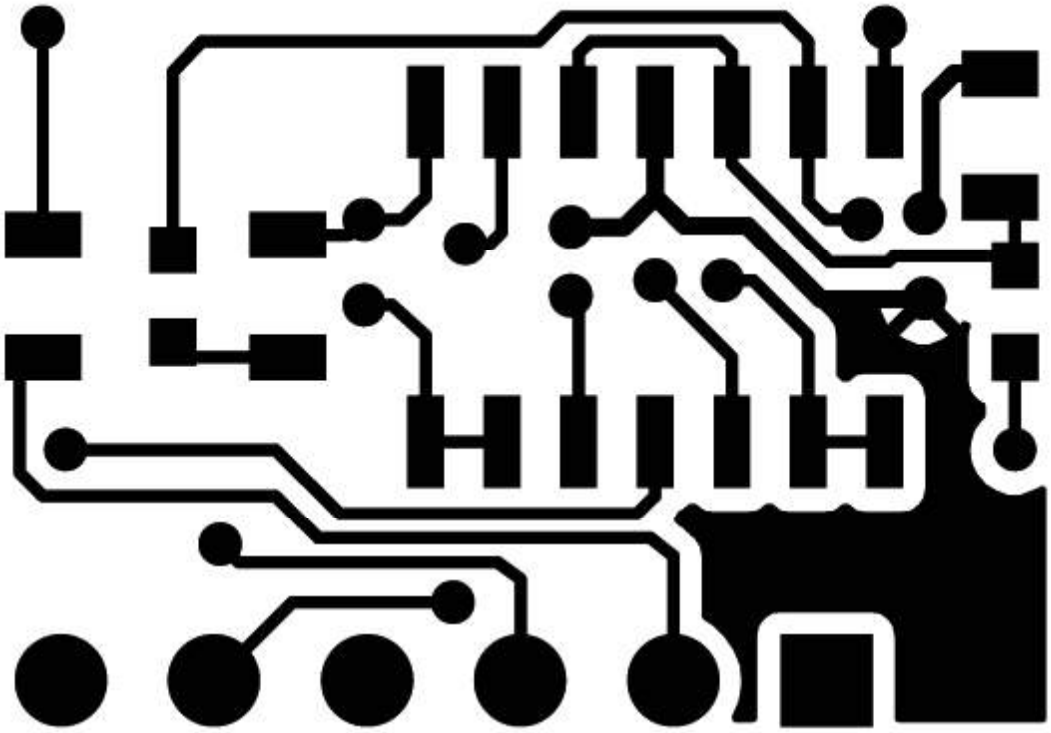

FILTER PCB TOP LAYER

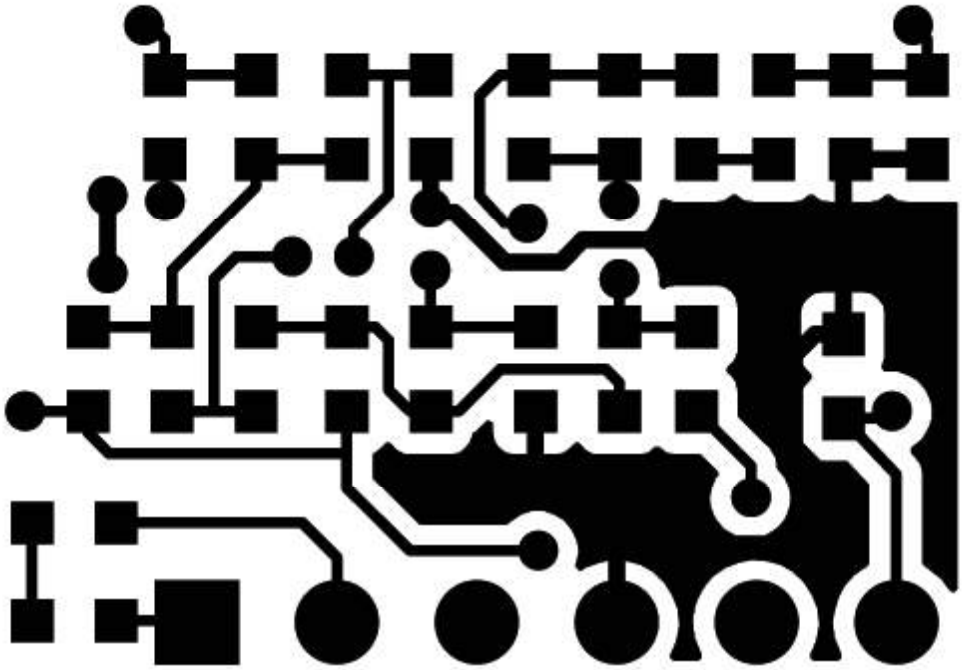

FILTER PCB BOTTOM LAYER

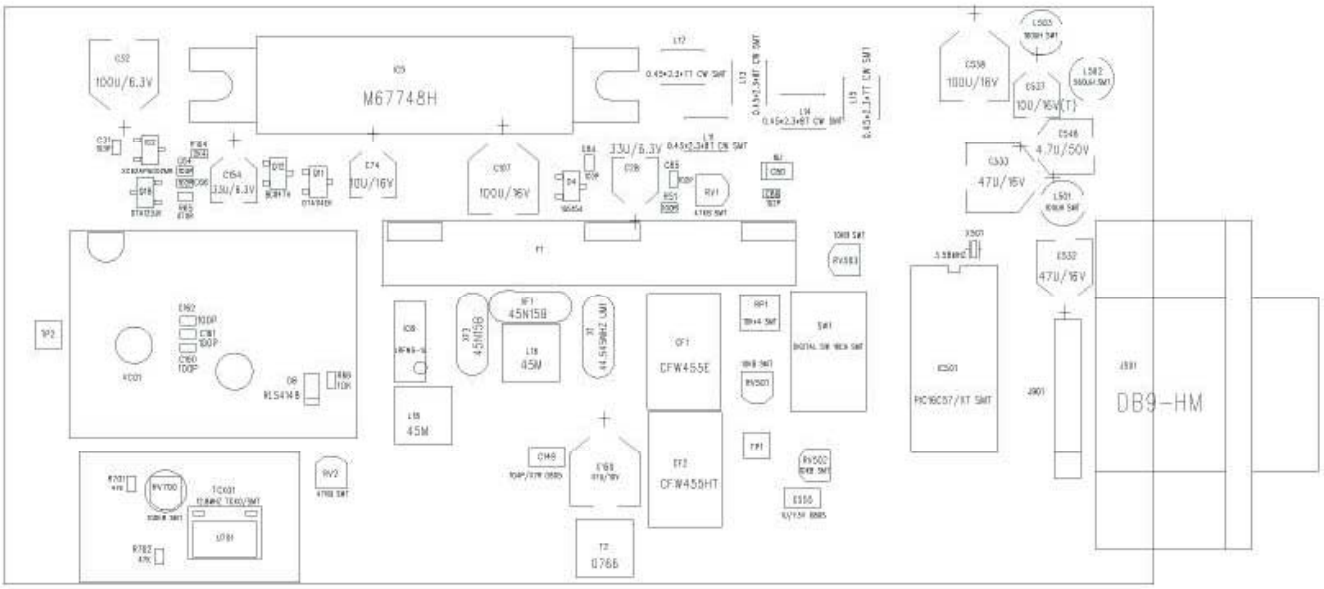

MAIN PCB COMPONENTS SIDE TOP VIEW

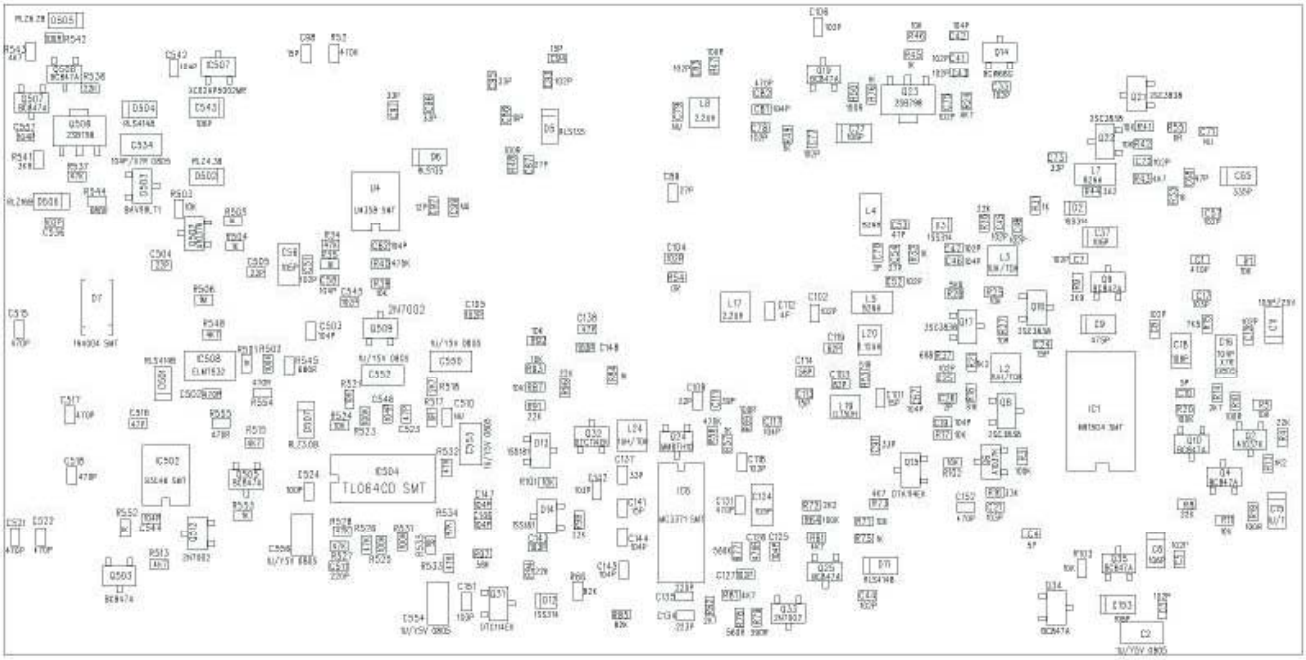

MAIN PCB COMPONENTS SIDE BOTTOM VIEW

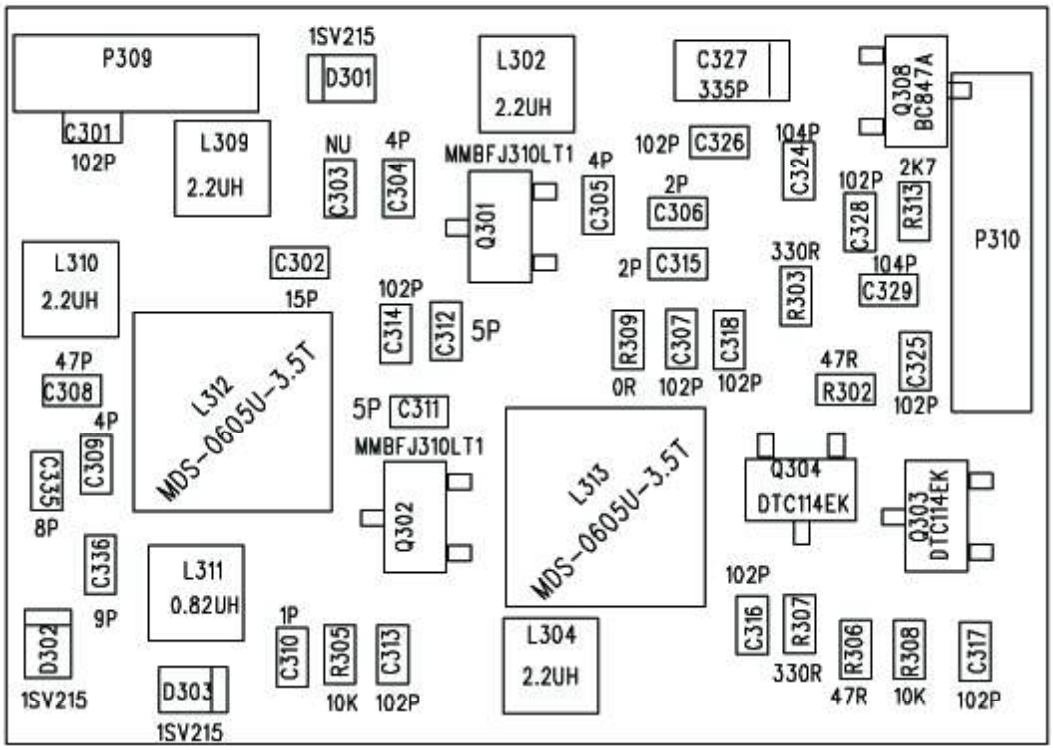

REF NO. / BAND	C304	C305	C308	C309	C311	C312	L312	L313	
★ 140-174	4P	4P	47P	4P	5P	5P	39NH	39NH	
220-240	5P	5P	27P	NU	4P	4P	22NH	47NH	

VHF VCO COMPONENTS SIDE

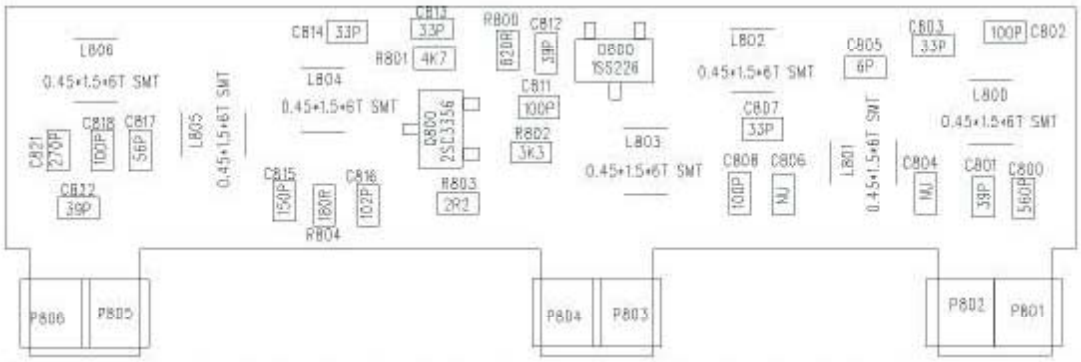

BAND \ REF NO	C800	C801	C802	C803	C804	C805	C806	C807	C808	C811	C812	C813	C814	C815	C816	C817	C818	C821	C822	L801-L807
★ 140-174	560P	39P	100P	33P	NU	6P	NU	33P	100P	100P	39P	33P	33P	150P	102P	56P	100P	270P	39P	0.45×1.5×6T SMT
220-240	270P	18P	47P	15P	NU	3P	NU	15P	47P	47P	18P	15P	18P	68P	102P	27P	47P	120P	18P	0.45×1.5×6T SMT

VHF FRONT-END COMPONENTS SIDE

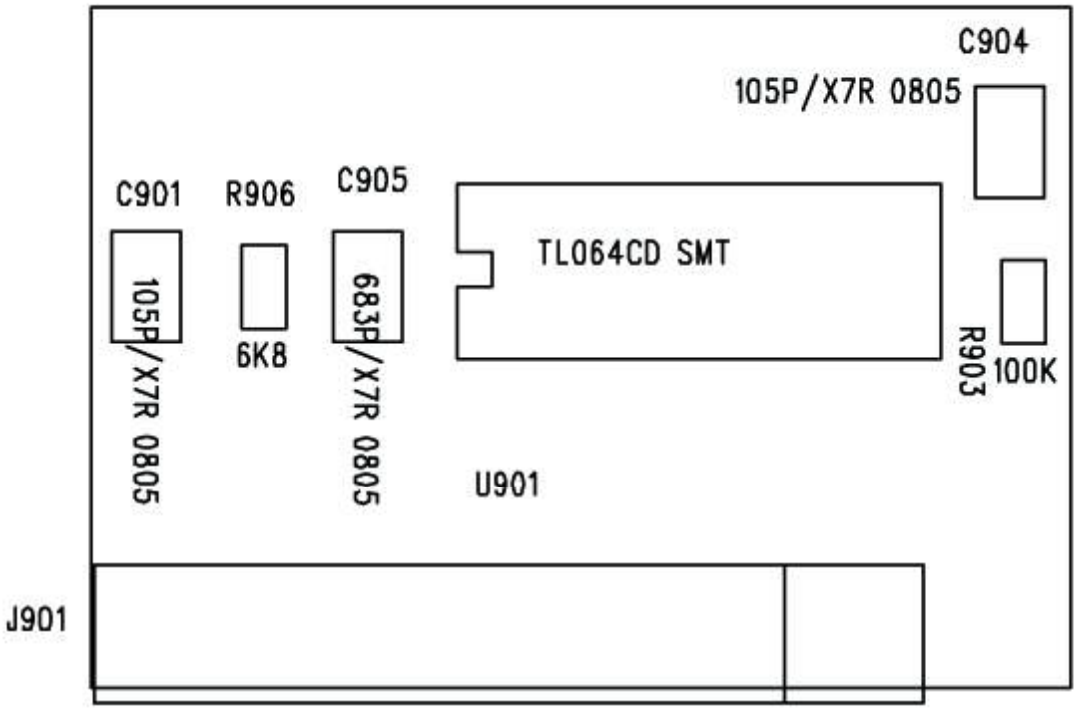

FILTER PCB COMPONENT SIDE TOP VIEW

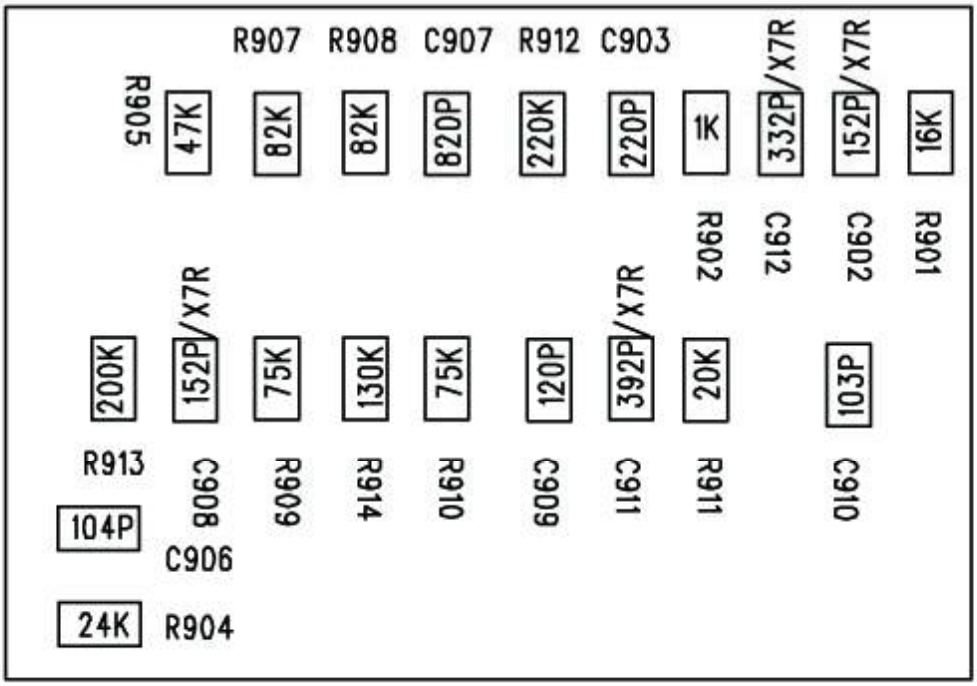

FILTER PCB COMPONENT SIDE BOTTOM VIEW

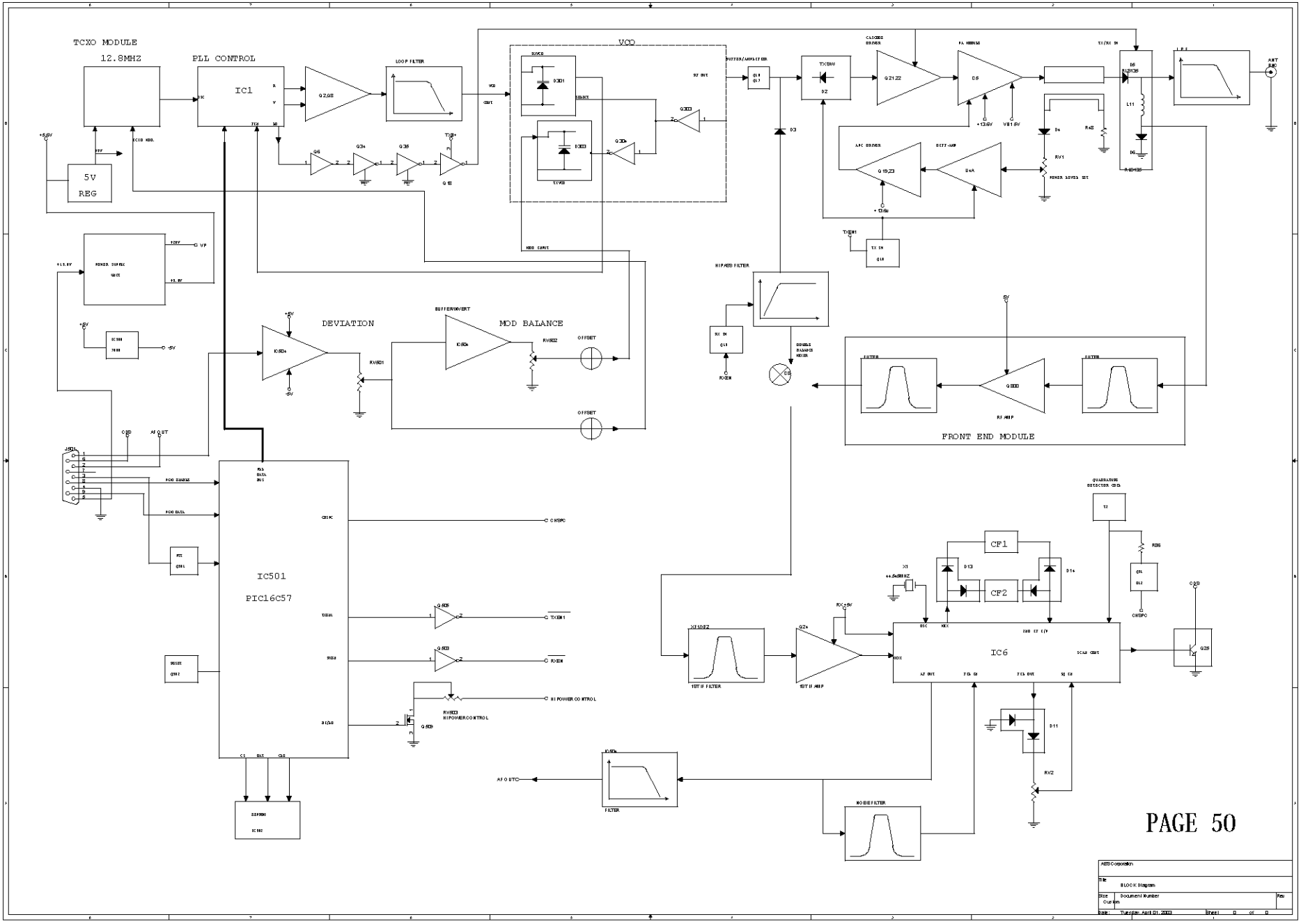
TCXO MODULE
12.8MHZ
PLL CONTROL
IC1
LOOP FILTER
VCO
5V
REG
DEVIATION
MOD BALANCE
OFFSET
FRONT END MODULE
IC501
PIC16C57
CHSPC
TXEN1
RXEN
HI POWER CONTROL
CF1
CF2
IC6
1ST IF FILTER
1ST IF AMP
NOISE FILTER
FILTER
AF OUT
PAGE 50
AES Corporation
BLOCK Diagram
Document Number
Tuesday, April 01, 2003

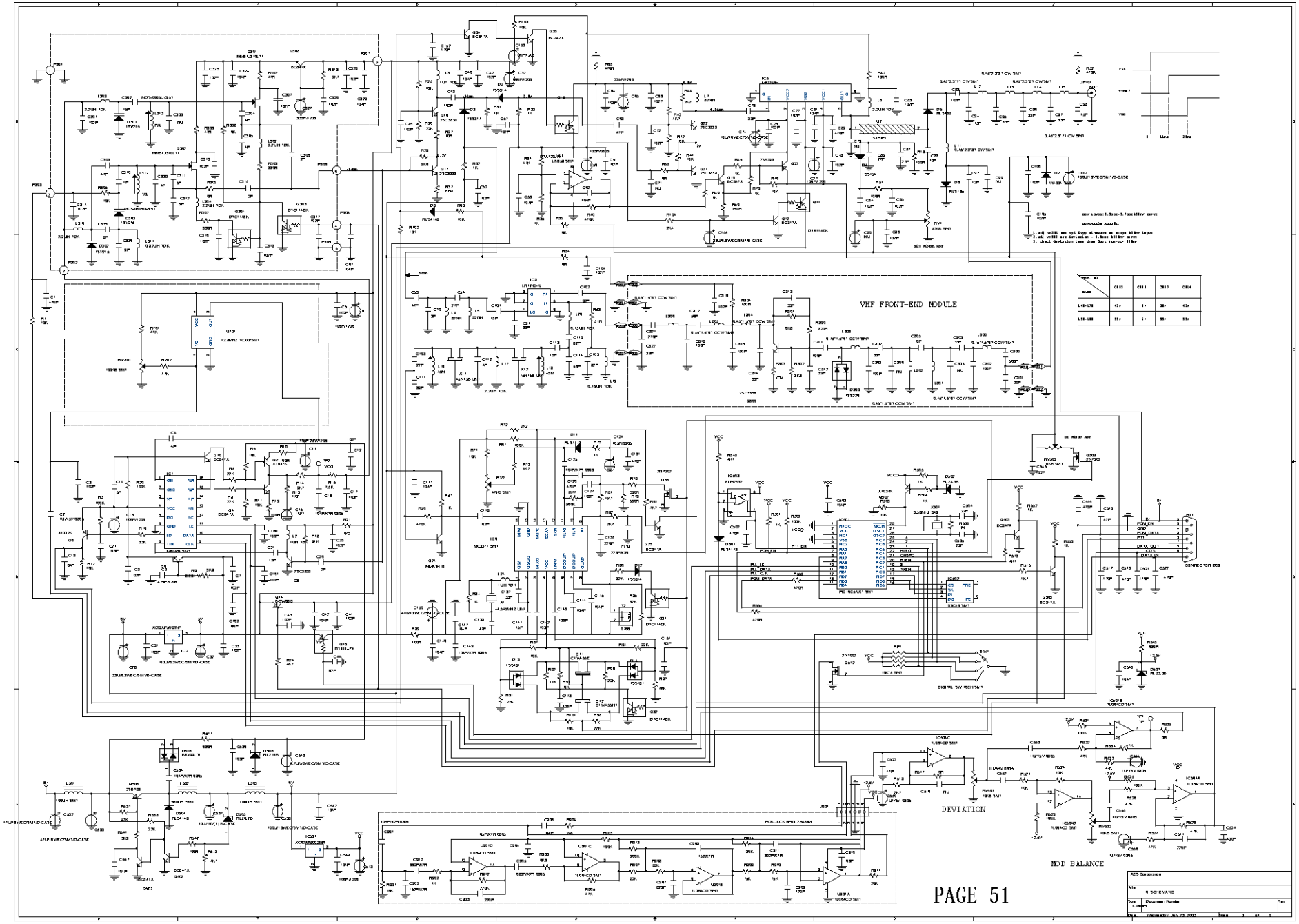
VHF FRONT-END MODULE
DEVIATION
MOD BALANCE
CONNECTOR DB9
PAGE 51