HYUNDAI CALIBRATION & CERTIFICATION TECH. CO., LTD.

INT'L STANDARD CERTIFICATION TEAM
SAN 136-1, AMI-RI , BUBAL-EUP, ICHEON-SI, KYOUNKI-DO, 467-701, KOREA
TEL : +82 31 639 8518 FAX : +82 31 639 8525

CERTIFICATION

Manufacture;

BTC Korea CO., LTD.
BTC B'D, 307 Yangjae-Dong, Seocho-Ku,
Seoul, KOREA (137-130)

Dates of Tests: MARCH 15, 2001

Test Report No.: HCT-F01-0302

Test Site: HYUNDAI CALIBRATION & CERTIFICATION TECHNOLOGIES CO.. LTD.

FCC ID :	**LAKNF-1500MAT**
MODEL / TYPE :	**NF-1500MAT**

FCC Rule Part(s):	**Part 15 & 2; ET Docket 95-19**
Classification:	**FCC Class B Peripheral Device (JBP)**
Standard(s):	**FCC Class B: 1998 (CISPR 22)**
Equipment(EUT) Type:	**15.1" LCD Monitor**
Max Resolution:	**1024X768 Non-interlaced (@60KHz/ 75Hz)**
Port/ Connector(s)	**15-pin D-sub VGA connector**
	S-VHS connector, RCA(video) connector

The device bearing the trade name and model specified above, has been shown to comply with the applicable technical standards as indicated in the measurement report and was tested in accordance with the measurement procedures specified in ANSI C63.4-1992.(See Test Report if any modifications were made for compliance)

I attest to the accuracy of data. All measurements reported herein were performed by me or were made under my supervision and are correct to the best of my knowledge and belief. I assume full responsibility for the completeness of these measurements and vouch for the qualifications of all persons taking them.

HYUNDAI C-Tech. certifies that no party to application has been denied the FCC benefits pursuant to Section 5301 of the Anti-Drug Abuse of 1988,21 U.S.C.853(a).

Ki Soo Kim

Report prepared by : Ki-Soo Kim
Manager of EMC Tech. Part

TABLE OF CONTENTS

PAGE

1. GENERAL INFORMATION..... 3
1.1 Product Description..... 3
1.2 Related submittal(s)/Grant(s)..... 3
1.3 Tested System Details..... 4
1.4 Test Methodology..... 4
1.5 Test Facility..... 4
2. SYSTEM TEST CONFIGURATION..... 5
2.1 Justification..... 5
2.2 EUT Exercise Software..... 5
2.3 Cable Description..... 6
2.4 Noise Suppression Parts on Cable..... 6
2.5 Equipment Modifications..... 7
2.6 Configuration of Tested System..... 8
3. PRELIMINARY TESTS..... 9
3.1 Power line Conducted Emissions Tests..... 9
3.2 Radiated Emissions Tests..... 9
4. FINAL CONDUCTED AND RADIATED EMISSION TESTS SUMMARY..... 10
4.1 Conducted Emission Tests..... 10
4.2 Radiated Emission Tests..... 11
5. FIELD STRENGTH CALCULATION..... 12
6. LIST OF TEST EQUIPMENT 12

ATTACHMENT A ……**ID Label / Location Info.**
ATTACHMENT B……**External Photos.**
ATTACHMENT C ……**Block Diagram..**
ATTACHMENT D ……**Test Setup Photos.**
ATTACHMENT E ……**User's Manual.**
ATTACHMENT F ……**Internal Photos.**

HYUNDAI CALIBRATION & CERTIFICATION TECHNOLOGIES CO., LTD.
SAN 136-1, AMI-RI , BUBAL-EUP, ICHEON-SI,KYOUNKI-DO, 467-701,KOREA
TEL : +82 31 639 8518 FAX : +82 31 639 8525

1. GENERAL INFORMATION

1.1 Product Description

The BTC Korea CO., LTD. Model NF-1500MA (referred to as the EUT in this report) is a 15.1" LCD Monitor HOR. Freq. 60KHz w/max. Resolution of 1024X768 Non-Interlaced. Product specification information described herein was obtained from product data sheet or user's manual.

CHASSIS TYPE	**PLASTIC**
LIST OF EACH OSC. OR XTAL. FREQ.(FREQ. 1MHz)	**12MHz / 14.318MHZ**
POWER REQUIREMENT	**100 - 240 VAC 60/50Hz 1.5A**
NUMBER OF LAYERS	**MAIN BOARD 2 LAYER** **OSD BOARD 2 LAYER** **POWER BOARD 1 LAYER** **INVERTER BOARD 2 LAYER** **LCD MODULE BOARD 2 LAYER**
MAX. RESOLUTION	**1024X768 NON-INTERLACED(@60KHz/ 75 Hz)**
H-SYNC FREQUENCY RANGE	**24.6KHz 60KHz**
V-SYNC FREQUENCY RANGE	**56 Hz 75Hz**
LCD SIZE	**15.1" (LCD Type : LG.PHILIPS LCD LM151X2)**

1.2 Related Submittal(s) / Grant(s)

ORIGINAL SUBMITTAL ONLY

HYUNDAI CALIBRATION & CERTIFICATION TECHNOLOGIES CO., LTD.
SAN 136-1, AMI-RI , BUBAL-EUP, ICHEON-SI,KYOUNKI-DO, 467-701,KOREA
TEL : +82 31 639 8518 FAX : +82 31 639 8525

1.3 Tested System Details

The Model names for all equipment, plus descriptions used in the tested system (including inserted cards) are:

DEVICE TYPE	MANUFACTURER	MODEL NUMBER	FCC ID / DoC	CONNECTED TO
MONITOR (EUT)	BTC Korea CO., LTD.	NF-1500MA	LAKNF-1500MAT	HOST
PC(HOST)	H/P	DTPC-17	DoC	N/A
KEY BOARD	H/P	SK-2501-2D-K	GYUR385K	HOST
PRINTER	H/P	HP895C	DoC	HOST
MODEM	3COM CORPORATION	56K FAX MODEM	DoC	HOST
VIDEO CARD	ATI TECHNOGIES INC.	109-41900-10	DoC	HOST
MOUSE	H/P	M-S34	DZL211029	HOST

1.4 Test Methodology

Both conducted and radiated testing were performed according to the procedures in ANSI C63.4/1992. Radiated testing was performed at an antenna to EUT distance of 10 meters.

1.5 Test Facility

The open area test site and conducted measurement facility used to collect the radiated data are located at the 254-1,MAEKOK-RI,HOBUP-MYUN,ICHON-SI,KYOUNGKI-DO, 467-701,KOREA. The site is constructed in conformance with the requirements of ANSI C63.4 and CISPR Publication 22. Detailed description of test facility was submitted to the Commission and accepted dated July 24,2000(Confirmation Number: EA90661)

HYUNDAI CALIBRATION & CERTIFICATION TECHNOLOGIES CO., LTD.
SAN 136-1, AMI-RI , BUBAL-EUP, ICHEON-SI,KYOUNKI-DO, 467-701,KOREA
TEL : +82 31 639 8518 FAX : +82 31 639 8525

2.SYSTEM TEST CONFIGURATION

2.1 Justification

The device was configured for testing in a typical fashion (as a customer would normally use it). During the tests, the following components and I/O cards inside the E.U.T were used.

DEVICE TYPE	MANUFACTURE	MODEL/PART NUMBER
MAIN BOARD	BTC Korea CO., Ltd.	-
POWER BOARD	BTC Korea CO., Ltd.	EM00212003
OSD BOARD	BTC Korea CO., Ltd.	ELO00212003
INVERTOR BOARD	BTC Korea CO., Ltd.	PIN5104003
LCD BOARD	LG. PHILIPS	LM151X2

2.2 EUT exercise Software

The EUT exercise program used during radiated and conducted testing was designed to exercise the various system components in a manner similar to a typical use. The software, contained on a 3-1/2 inch disc, was inserted into drive A and is auto starting on power-up. Once loaded, the program sequentially exercises each system component in turn. The sequence used is :(1) Display test, (2) RS 232 test (3) Key board test,(4) Printer test,(5) FDD test,(6) HDD test. The complete cycle takes about 20 seconds and is repeated continuously. As the keyboard and mouse are strictly input devices, no data is transmitted to them during test. They are however, continuously scanned for data input activity. The video resolution modes setup and change program was used during the radiated and conducted emission testing.

HYUNDAI CALIBRATION & CERTIFICATION TECHNOLOGIES CO., LTD.
SAN 136-1, AMI-RI , BUBAL-EUP, ICHEON-SI,KYOUNKI-DO, 467-701,KOREA
TEL : +82 31 639 8518 FAX : +82 31 639 8525

2.3 Cable Description

The marked "(D)" means the Data Cable and "(P)" means the Power Cable.

	Power Cord Shielded (Y/N)	I/O Cable Shielded (Y/N)	Length (M)
MONITOR(EUT)	N	Y	1.8(P), 1.8(D)
PC(HOST)	N	N/A	1.8(P)
PRINTER	N	Y	2.0(P),1.5(D)
KEY BOARD	N/A	Y	2.0(D)
EAR PHONE	N/A	Y	2.0(D)
S-VHS	N/A	Y	1.8(D)
RCA(VIDEO)	N/A	Y	1.5(D)
AUDIO CABLE	N/A	Y	2.0(D)
ANT. CABLE	N/A	Y	2.0(D)
MODEM	N	Y	2.0(P),1.5(D)
MOUSE	N/A	Y	1.8(D)

2.4 Noise Suppression Parts on Cable. (I/O CABLE)

	Ferrite Bead (Y/N)	Location	Metal Hood (Y/N)	Location
MONITOR(EUT)	Y	BOTH END	Y	BOTH END
PRINTER	N	PC END	Y	BOTH END
KEY BOARD	Y	PC END	N	N/A
MODEM	Y	PC END	Y	BOTH END
EAR PHONE	N	N/A	N	N/A
S-VHS	N	N/A	N	N/A
RCA(VIDEO)	N	N/A	N	N/A
AUDIO CABLE	Y	BOTH END	N	N/A
ANT. CABLE	Y	BOTH END	Y	BOTH END
MOUSE	N	N/A	N	N/A

HYUNDAI CALIBRATION & CERTIFICATION TECHNOLOGIES CO., LTD.
SAN 136-1, AMI-RI , BUBAL-EUP, ICHEON-SI,KYOUNKI-DO, 467-701,KOREA
TEL : +82 31 639 8518 FAX : +82 31 639 8525

2.5 Equipment Modifications

N/A

HYUNDAI CALIBRATION & CERTIFICATION TECHNOLOGIES CO., LTD.
SAN 136-1, AMI-RI , BUBAL-EUP, ICHEON-SI,KYOUNKI-DO, 467-701,KOREA
TEL : +82 31 639 8518 FAX : +82 31 639 8525

2.6 Configuration of Test system

Line Conducted Test : EUT was connected to LISN, all other supporting equipment were connected to another LISN.
Preliminary Power line Conducted Emission tests were performed by using the procedure in ANSI C63.4/1992 7.2.3 to determine the worse operating conditions.

Radiated Emission Test : Preliminary Radiated Emissions tests were conducted using the procedure in ANSI C63.4/1992 8.3.1.1 to determine the worse operating condition. Final Radiated Emission tests were conducted at 10 meter open area test site.

[Configuration of Tested System]

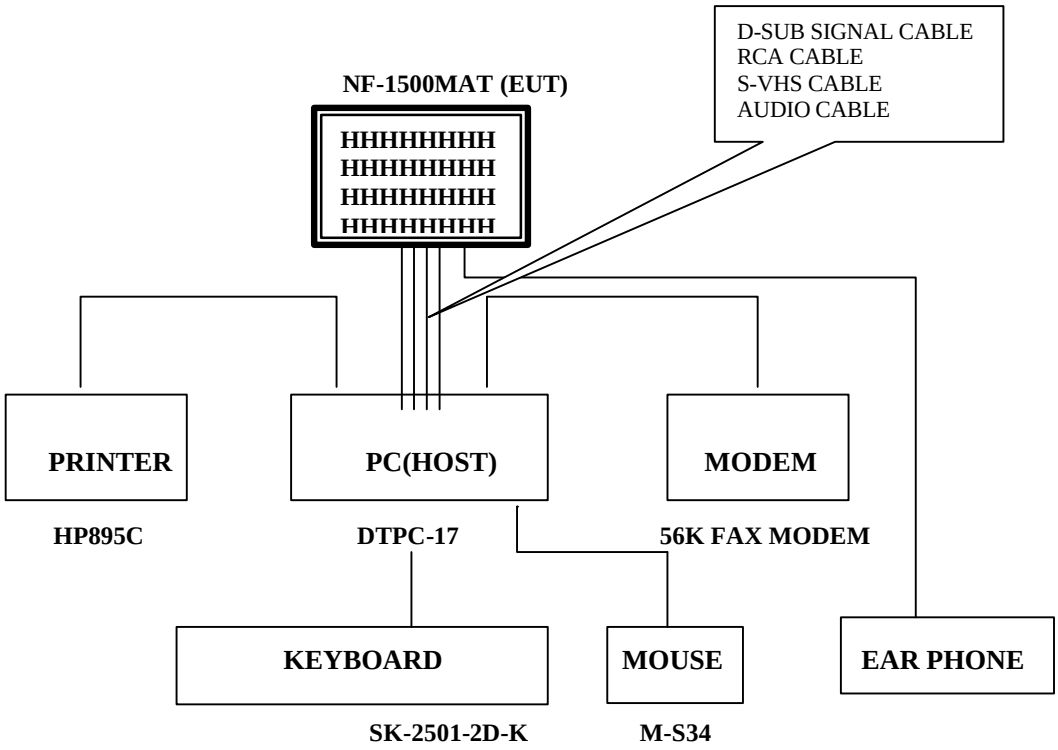

HYUNDAI CALIBRATION & CERTIFICATION TECHNOLOGIES CO., LTD.
SAN 136-1, AMI-RI , BUBAL-EUP, ICHEON-SI,KYOUNKI-DO, 467-701,KOREA
TEL : +82 31 639 8518 FAX : +82 31 639 8525

3. PRELIMINARY TESTS

3.1 AC Power line Conducted Emission Tests

During Preliminary Tests, the following operating mode were investigated

Processor Speed (MHz)	Video Resolution (w/max)		The worst operating condition
Pentium 350 MHz	1024 x 768	Non-Interlaced (60KHz/75Hz)	X
Pentium 350 MHz	800 x 600	Non-Interlaced (53.7 KHz/85Hz)	
Pentium 350 MHz	640 x 480	Non-Interlaced (31.5KHz/60Hz)	

4.2 Radiated Emission Tests

Processor Speed (MHz)	Video Resolution (w/max)		The worst operating condition
Pentium 350 MHz	1024 x 768	Non-Interlaced (60KHz/75Hz)	X
Pentium 350 MHz	800 x 600	Non-Interlaced (53.7 KHz/85Hz)	
Pentium 350 MHz	640 x 480	Non-Interlaced (31.5 KHz/60Hz)	

NOTE:
The monitor(EUT) has video interface port(VGA 15 pin D-sub, S-VHS connector, RCA(video) connector) to support various kinds of graphics adapters.
So the test were performed with each video interface port. The final measurement was performed with VGA 15 pin D-sub video interface port that produce the worst case emission.

Tested by Keun- Ho Park / Engineer Date : FEB. 26, 2000

HYUNDAI CALIBRATION & CERTIFICATION TECHNOLOGIES CO., LTD.
SAN 136-1, AMI-RI , BUBAL-EUP, ICHEON-SI,KYOUNKI-DO, 467-701,KOREA
TEL : +82 31 639 8518 FAX : +82 31 639 8525

4. FINAL CONDUCETD AND RADIATED EMISSION TESTS SUMMARY

4.1 Conducted Emission Test

The following table shows the highest levels of conducted emissions on both polarization of hot and neutral line.

Humidity Level : 32% Temperature : 16
Limit apply to : CISPR 22
Type of Tests : CLASS B
Date : MARCH 4, 2001
Result : PASSED BY –3.2 dB
EUT : 15.1" LCD MONITOR

Operating Condition : 1024X768 Non-Interlaced (Hf : 60 KHz, Vf : 75Hz)
Detector : CISPR Quasi-Peak (6 dB Bandwidth : 9 KHz)
CISPR Average(6 dB Bandwidth : 9 KHz)

Line Conducted Emission Tabulated Data

Power Line Conducted Emissions			CISPR 22		
Frequency (MHz)	Amplitude (dBuV)	Conductor	Limit (dBuV)	Margin (dB)	Detector Mode
0.575	42.0	N	46.0	-4.0	Average
0.635	42.0	N	46.0	-4.0	Average
0.580	42.5	H	46.0	-3.5	Average
0.640	42.8	H	46.0	-3.2	Average

NOET:
1. All video modes and resolutions were investigated and the worst-case emissions are reported
Other video modes & resolution were tested and found to be in compliance.

Measured by : Keun-Ho Park / Engineer Date : MARCH 4, 2001

HYUNDAI CALIBRATION & CERTIFICATION TECHNOLOGIES CO., LTD.
SAN 136-1, AMI-RI , BUBAL-EUP, ICHEON-SI,KYOUNKI-DO, 467-701,KOREA
TEL : +82 31 639 8518 FAX : +82 31 639 8525

HYUNDAI C-TECH. CO..LTD. EMC LAB
San 136-1,Ami-Ri-Bubal-Eub,Ichon-Si,Kyongki-Do

EUT:	NF-1500MAT
Manufacturer:	BTC CO., LTD.
Operating Condition:	1024X768 Hf:60KHz Vf:75Hz
Test Site:	Shield Room
Operator:	Keun-Ho Park
Test Specification:	CISPR 22 CLASS B
Comment:	HOT
Start of Test:	3/4/01 / 2:41:06PM

SCAN TABLE: "MIC CLASS B"

Short Description: KN22 CLASS B Voltage

Start Frequency	Stop Frequency	Step Width	Detector	Meas. Time	IF Bandw.	Transducer
150.0 kHz	500.0 kHz	3.0 kHz	MaxPeak Average	100.0 ms	9 kHz	C/E FACTOR
500.0 kHz	5.0 MHz	5.0 kHz	MaxPeak Average	10.0 ms	9 kHz	C/E FACTOR

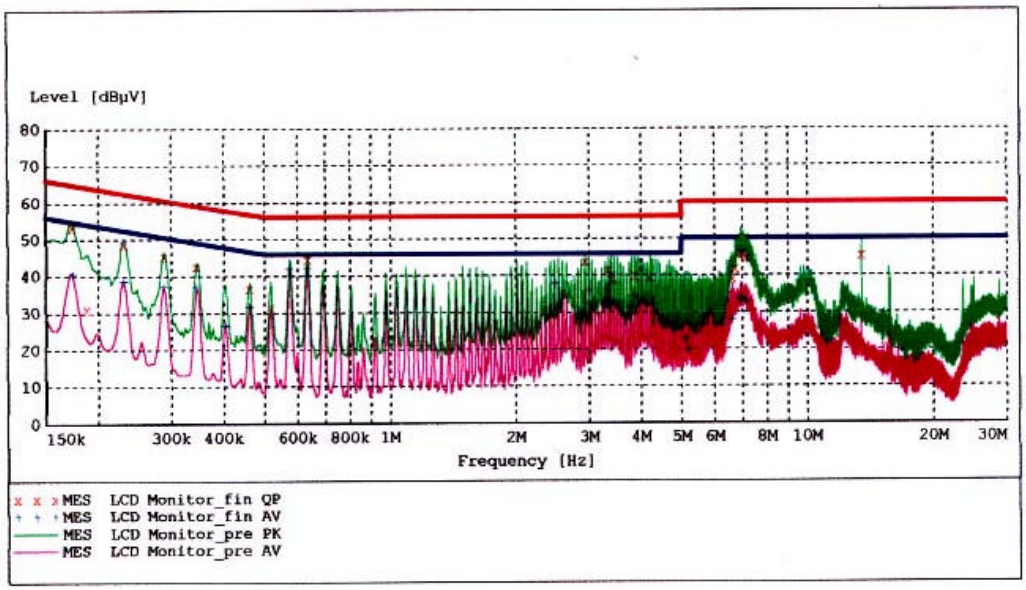

MEASUREMENT RESULT: "LCD Monitor_fin QP"
3/4/01 2:49PM

Frequency MHz	Level dBµV	Transd dB	Limit dBµV	Margin dB	Line	PE
0.174000	53.20	0.5	65	11.6	1	---
0.189000	31.10	0.5	64	33.0	1	---
0.231000	48.60	0.5	62	13.8	1	---
0.288000	45.40	0.5	61	15.2	1	---
0.345000	42.70	0.5	59	16.4	1	---
0.462000	36.60	0.5	57	20.0	1	---
0.635000	44.40	0.5	56	11.6	1	---
2.940000	43.80	0.6	56	12.2	1	---
3.345000	41.40	0.6	56	14.6	1	---
3.405000	39.00	0.7	56	17.0	1	---
3.865000	39.90	0.7	56	16.1	1	---
4.210000	39.40	0.8	56	16.6	1	---
6.625000	39.10	1.0	60	20.9	1	---
6.740000	41.70	1.0	60	18.3	1	---

Page 1/2 3/4/01 2:50PM LCD Monitor

MEASUREMENT RESULT: "LCD Monitor_fin QP"
(continued)

Frequency MHz	Level dBµV	Transd dB	Limit dBµV	Margin dB	Line	PE
6.945000	46.20	1.1	60	13.8	1	---
7.020000	45.70	1.1	60	14.3	1	---
7.270000	43.30	1.1	60	16.7	1	---
13.560000	45.30	1.4	60	14.7	1	---

MEASUREMENT RESULT: "LCD Monitor_fin AV"
3/4/01 2:39PM

Frequency MHz	Level dBµV	Transd dB	Limit dBµV	Margin dB	Line	PE
0.174000	43.20	0.5	55	11.6	1	---
0.231000	40.10	0.5	52	12.3	1	---
0.291000	38.50	0.5	51	12.0	1	---
0.348000	37.90	0.5	49	11.1	1	---
0.408000	27.20	0.5	48	20.4	1	---
0.465000	35.10	0.5	47	11.5	1	---
0.580000	42.50	0.5	46	3.5	1	---
0.640000	42.80	0.5	46	3.2	1	---
2.090000	39.50	0.6	46	6.5	1	---
2.555000	39.70	0.6	46	6.3	1	---
3.365000	41.50	0.6	46	4.5	1	---
3.830000	40.80	0.7	46	5.2	1	---
5.045000	22.30	0.9	50	27.7	1	---
5.160000	24.40	0.9	50	25.6	1	---
5.220000	20.80	0.9	50	29.2	1	---
5.625000	20.70	1.0	50	29.3	1	---
6.900000	33.30	1.1	50	16.7	1	---
7.075000	33.40	1.1	50	16.6	1	---

Page 2/2 3/4/01 2:39PM LCD Monitor

HYUNDAI C-TECH. CO.,LTD. EMC LAB
San 136-1,Ami-Ri-Bubal-Eub,Ichon-Si,Kyongki-Do

EUT:	NF-1500MAT
Manufacturer:	BTC CO., LTD.
Operating Condition:	1024X768 Hf:60KHz Vf:75Hz
Test Site:	Shield Room
Operator:	Keun-Ho Park
Test Specification:	CISPR 22 CLASS B
Comment:	NEUTRAL
Start of Test:	3/4/01 / 2:33:55PM

SCAN TABLE: "MIC CLASS B"

Short Description: KN22 CLASS B Voltage

Start Frequency	Stop Frequency	Step Width	Detector	Meas. Time	IF Bandw.	Transducer
150.0 kHz	500.0 kHz	3.0 kHz	MaxPeak Average	100.0 ms	9 kHz	C/E FACTOR
500.0 kHz	5.0 MHz	5.0 kHz	MaxPeak Average	10.0 ms	9 kHz	C/E FACTOR

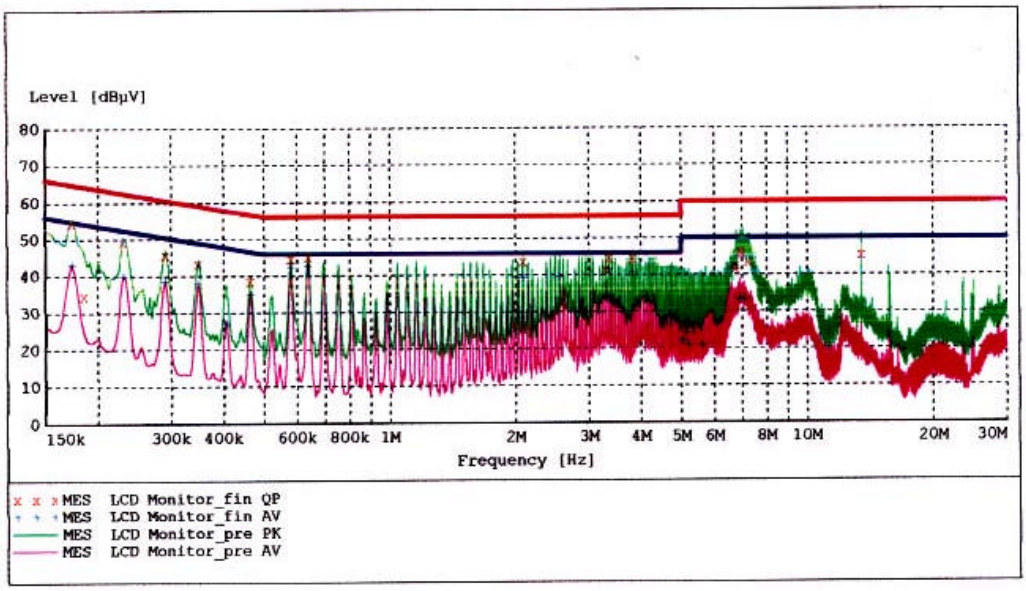

MEASUREMENT RESULT: "LCD Monitor_fin QP"

3/4/01 2:39PM

Frequency MHz	Level dBµV	Transd dB	Limit dBµV	Margin dB	Line	PE
0.174000	54.40	0.5	65	10.4	1	---
0.186000	34.60	0.5	64	29.6	1	---
0.231000	49.20	0.5	62	13.2	1	---
0.291000	45.70	0.5	61	14.7	1	---
0.348000	43.40	0.5	59	15.6	1	---
0.465000	38.50	0.5	57	18.1	1	---
0.580000	44.60	0.5	56	11.4	1	---
0.640000	45.00	0.5	56	11.0	1	---
2.090000	43.60	0.6	56	12.4	1	---
3.310000	41.50	0.6	56	14.5	1	---
3.365000	44.60	0.6	56	11.4	1	---
3.830000	44.50	0.7	56	11.5	1	---
6.750000	41.60	1.0	60	18.4	1	---
6.780000	42.70	1.0	60	17.3	1	---

Page 1/2 3/4/01 2:39PM LCD Monitor

MEASUREMENT RESULT: "LCD Monitor_fin QP"
(continued)

Frequency MHz	Level dBµV	Transd dB	Limit dBµV	Margin dB	Line	PE
6.955000	46.10	1.1	60	13.9	1	---
7.040000	45.70	1.1	60	14.3	1	---
7.200000	44.70	1.1	60	15.3	1	---
13.560000	45.30	1.4	60	14.7	1	---

MEASUREMENT RESULT: "LCD Monitor_fin AV"
3/4/01 2:49PM

Frequency MHz	Level dBµV	Transd dB	Limit dBµV	Margin dB	Line	PE
0.174000	40.60	0.5	55	14.2	1	---
0.231000	38.70	0.5	52	13.7	1	---
0.288000	37.20	0.5	51	13.3	1	---
0.345000	37.00	0.5	49	12.1	1	---
0.405000	26.80	0.5	48	20.9	1	---
0.462000	31.80	0.5	47	14.9	1	---
0.575000	42.00	0.5	46	4.0	1	---
0.635000	42.00	0.5	46	4.0	1	---
2.480000	37.90	0.6	46	8.1	1	---
2.540000	32.30	0.6	46	13.7	1	---
3.000000	36.10	0.6	46	9.9	1	---
3.865000	34.40	0.7	46	11.6	1	---
5.125000	22.80	0.9	50	27.2	1	---
5.185000	19.90	0.9	50	30.1	1	---
6.625000	27.90	1.0	50	22.1	1	---
6.915000	33.50	1.1	50	16.5	1	---
6.970000	33.80	1.1	50	16.2	1	---
7.145000	32.80	1.1	50	17.2	1	---

Page 2/2 3/4/01 2:50PM LCD Monitor

4.2 Radiated Emissions Tests

The following table shows the highest levels of Radiated Emissions on both polarization of horizontal and vertical.

Humidity Level : 31 % Temperature : 14
Limit apply to : CISPR 22
Type of Tests : CLASS B
Date : MARCH 6, 2001
Result : PASSED BY -3.3 dB

==========

EUT : 15.1" LCD MONITOR
Operating Condition : 1024X768 Non-Interlaced (Hf :60 kHz, Vf : 75 Hz)
Detector : CISPR Quasi-Peak (6 dB Bandwidth : 120 KHz)

Frequency MHz	Reading dBuV	Ant. Factor dB	Cable Loss dB	ANT POL (H/V)	Total dBuV/m	Limit dB	Margin dB
45.5	8.69	13.31	1.40	V	23.4	30.0	-6.6
52.3	14.00	10.10	1.50	V	25.6	30.0	-4.4
63.1	16.48	6.72	1.70	V	24.9	30.0	-5.1
92.2	14.08	8.92	2.00	V	25.0	30.0	-5.0
131.3	10.04	14.16	2.50	V	26.7	30.0	-3.3
204.8	7.16	15.94	3.00	V	26.1	30.0	-3.9
260.9	9.34	17.76	3.60	V	30.7	37.0	-6.3
260.9	9.14	17.76	3.60	H	30.5	37.0	-6.5
392.8	8.97	16.53	4.20	V	29.7	37.0	-7.3
459.8	8.07	17.83	4.70	V	30.6	37.0	-6.4
459.8	7.07	17.83	4.70	H	29.6	37.0	-7.4
524.0	7.76	18.94	5.10	V	31.8	37.0	-5.2
524.0	4.36	18.94	5.10	H	28.4	37.0	-8.6

NOTE:
1.All video modes and resolutions were investigated and the worst-case emissions are reported.
2.Other video modes & resolution were tested and found to be in compliance.
3. The EUT was test up to 2GHz and no significant emission was found.

Measured by : Keun-Ho Park / Engineer **Date : MARCH 6, 2001**

HYUNDAI CALIBRATION & CERTIFICATION TECHNOLOGIES CO., LTD.
SAN 136-1, AMI-RI , BUBAL-EUP, ICHEON-SI,KYOUNKI-DO, 467-701,KOREA
TEL : +82 31 639 8518 FAX : +82 31 639 8525

5. Field Strength Calculation

The field strength is calculated by adding the Antenna Factor and Cable Factor.
The basic equation with a sample calculation is as follows:

FS = RA + AF + CF

where FS = Field Strength

RA = Receiver Amplitude

AF = Antenna Factor

CF = Cable Attenuation Factor

Assume a receiver reading of 21.5 dBuV is obtained. The Antenna Factor of 7.4 and a Cable Factor of 1.1 is added. The 30 dBuV/m value was mathematically converted to its corresponding level in uV/m.

FS = 21.5 + 7.4 + 1.1 = 30 dBuV/m

Level in uV/m = Common Antilogarithm [(30 dBuV/m)/20] = 31.6 uV/m

HYUNDAI CALIBRATION & CERTIFICATION TECHNOLOGIES CO., LTD.
SAN 136-1, AMI-RI , BUBAL-EUP, ICHEON-SI,KYOUNKI-DO, 467-701,KOREA
TEL : +82 31 639 8518 FAX : +82 31 639 8525

6. LIST OF TEST EQUIPMENT

TYPE	MANUFACTURE	MODEL	CAL. DATE
EMI Test Receiver	Rohde & Schwarz	ESH3	2000.6.29
EMI Test Receiver	Rohde & Schwarz	ESVP	2001.2.14
EMI Test Receiver	Rohde & Schwarz	ESI40	2001.1.18
EMI Test Receiver	Rohde & Schwarz	ESVS30	2000.6.29
Spectrum Monitor	Rohde & Schwarz	EZM	N.A
Graphic Plotter	Rohde & Schwarz	DOP2	N.A
Printer	Rohde & Schwarz	PDN	N.A
Spectrum Analyzer	H.P	8591EM	2000.7.11
LISN	EMCO	3825/2	2000.10.13
LISN	Rohde & Schwarz	ESH2-Z5	2000.7.14
Amplifier	Hewlett-Packard	8447E	2001.3.2
Dipole Antennas	Rohde & Schwarz	VHAP	2000.6.29
Dipole Antennas	Rohde & Schwarz	UHAP	2000.6.29
Biconical Antenna	Rohde & Schwarz	BBA-9106	2000.6.29
Log-Periodic Antenna	Rohde & Schwarz	UHALP-9107	2000.6.29
Antenna Position Tower	EMCO	1051-12	N.A
Turn Table	EMCO	1060-06	N.A
Line Filter	KEENE	ULW 2X30-60	N.A
Power Analyzer	Voltech	PM 3300	2000.12.20
Reference Network Impedance	Voltech	IEC 555	N.A
AC Power Source	PACIFIC	Magnetic Module	N.A
AC Power Source	PACIFIC	360AMX	N.A

HYUNDAI CALIBRATION & CERTIFICATION TECHNOLOGIES CO., LTD.
SAN 136-1, AMI-RI , BUBAL-EUP, ICHEON-SI,KYOUNKI-DO, 467-701,KOREA
TEL : +82 31 639 8518 FAX : +82 31 639 8525