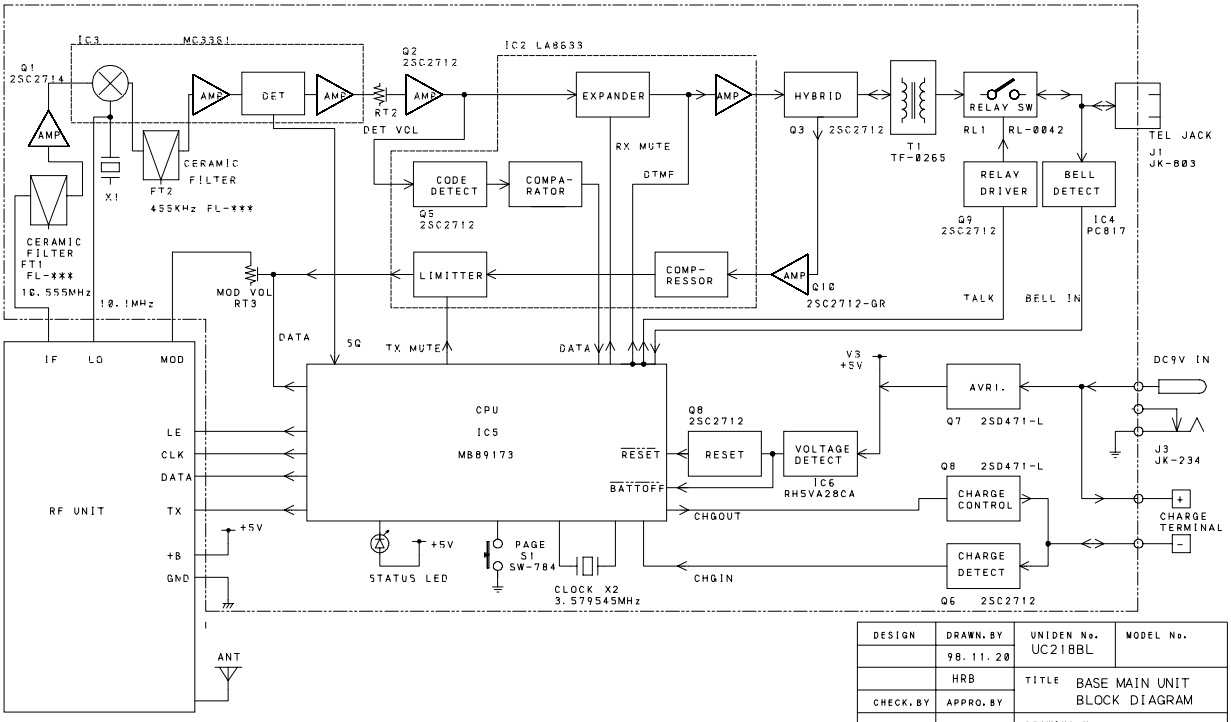

DESIGN	DRAWN. BY	UNIDEN No.	MODEL No.
	98.11.20	UC218BL	
	HRB	TITLE	BASE MAIN UNIT BLOCK DIAGRAM
CHECK. BY	APPRO. BY		
		DRAWING No.	
REV. No		UNIDEN CORP.	