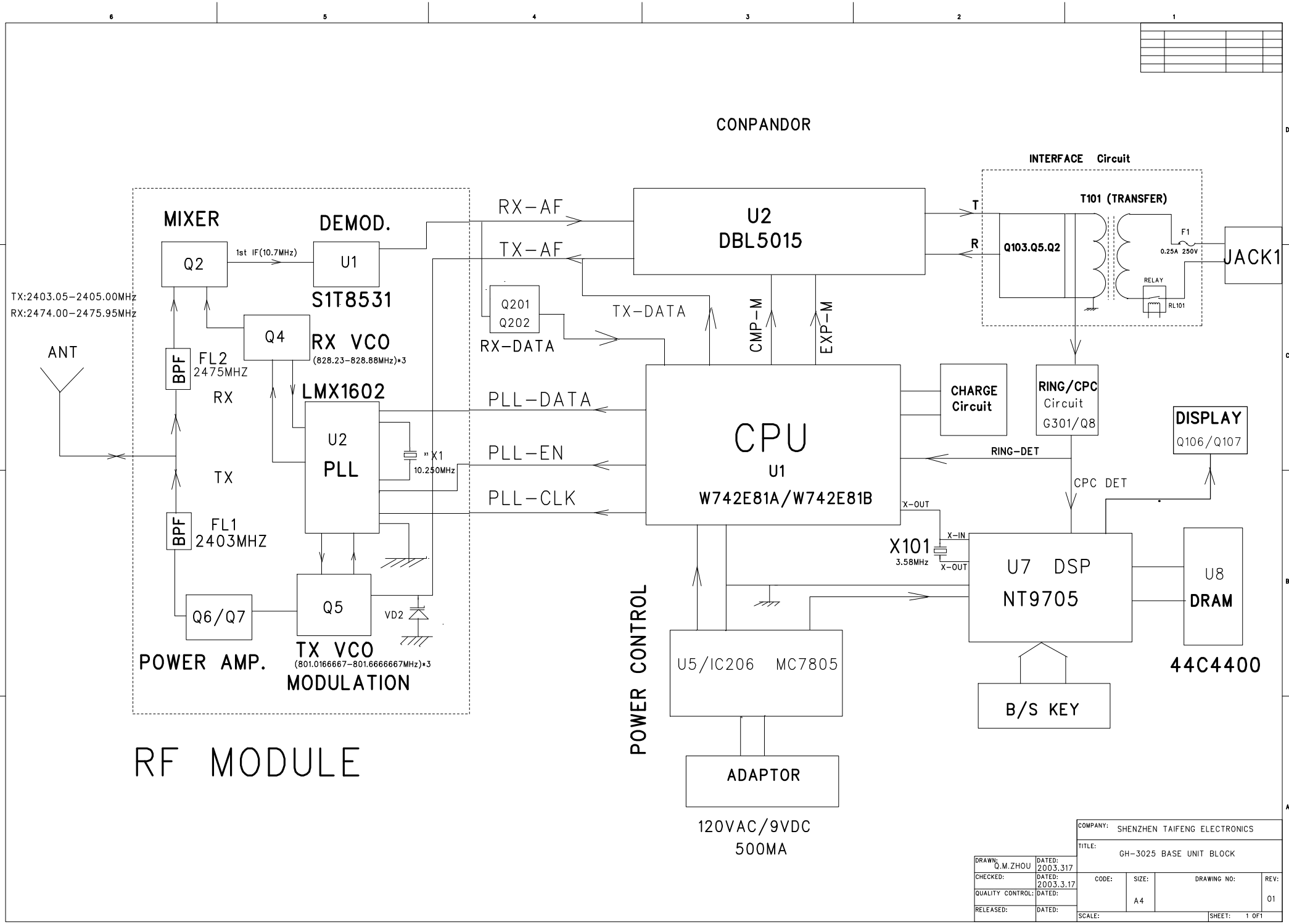

COMPANY: SHENZHEN TAIFENG ELECTRONICS			
TITLE: GH-3025 BASE UNIT BLOCK			
DRAWN: Q.M.ZHOU	DATED: 2003.317	CODE:	SIZE: A4 / DRAWING NO: / REV: 01
CHECKED:	DATED: 2003.3.17		
QUALITY CONTROL:	DATED:		
RELEASED:	DATED:	SCALE:	SHEET: 1 OF1

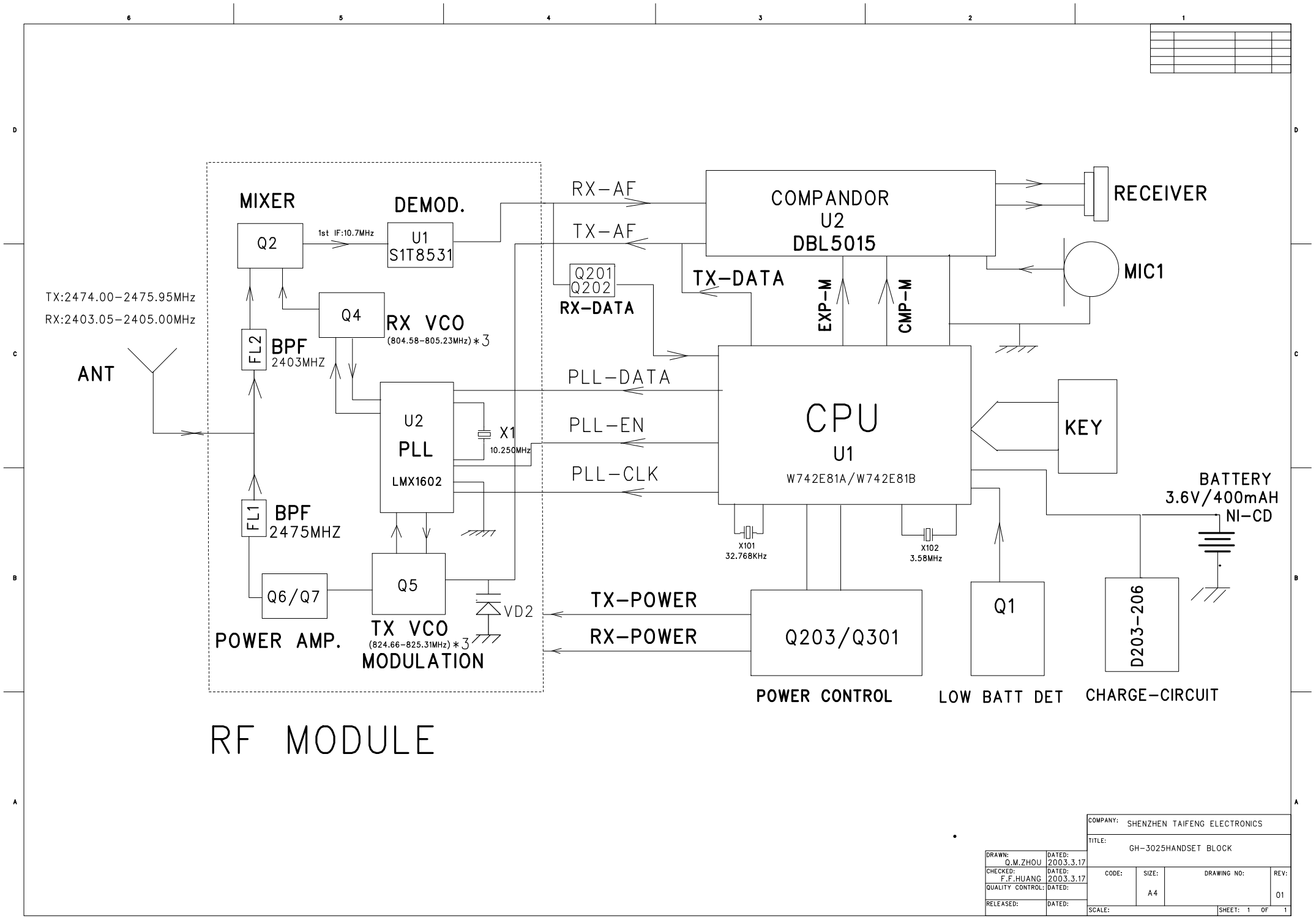

RF MODULE

COMPANY: SHENZHEN TAIFENG ELECTRONICS			
TITLE: GH-3025HANDSET BLOCK			
DRAWN: Q.M.ZHOU	DATED: 2003.3.17	CODE:	SIZE: A4 / DRAWING NO: / REV: 01
CHECKED: F.F.HUANG	DATED: 2003.3.17		
QUALITY CONTROL:	DATED:		
RELEASED:	DATED:	SCALE:	SHEET: 1 OF 1