TI01805F/00/EN/02.24-00
71687476
2024-12-09

Technical Information
Micropilot FMR10B

Free-space radar

Level measurement in liquids and bulk solids

Application

- Continuous, non-contact level measurement of liquids and bulk solids
- Degree of protection: IP66/68 / NEMA Type 4X/6P
- Maximum measuring range up to 10 m (33 ft)
- Process temperature: −40 to 60 °C (−40 to 140 °F)
- Process pressure: −1 to 3 bar (−14 to 43 psi)
- Accuracy: Up to ± 5 mm (0.2 in)

Your benefits

- LED indicator for fast status detection
- Easy, guided commissioning with intuitive user interface
- Radar measuring device with *Bluetooth*® wireless technology
- Simple, safe and secure wireless remote access – ideal for installation in places difficult to reach
- Commissioning, operation and maintenance via free iOS/Android app SmartBlue – saves time and reduces costs
- Flow measurement in open channels or weirs with totalizer

Endress+Hauser
People for Process Automation

Table of contents

About this document . . . 4
Symbols . . . 4
List of abbreviations . . . 4
Graphic conventions . . . 5

Function and system design . . . 5
Measuring principle . . . 5
Measuring system . . . 6
Communication and data processing . . . 6
Dependability . . . 6
Device-specific IT security . . . 6

Input . . . 6
Measured variable . . . 6
Measuring range . . . 6
Operating frequency . . . 10
Transmission power . . . 10

Output . . . 10
Output signal . . . 10
Signal on alarm for devices with current output . . . 10
Load . . . 10
Damping . . . 10
Linearization . . . 10
Totalizer . . . 11

Power supply . . . 11
Cable assignment . . . 11
Supply voltage . . . 11
Power consumption . . . 11
Potential equalization . . . 11
Cable specification . . . 11
Overvoltage protection . . . 12

Performance characteristics . . . 12
Reference conditions . . . 12
Resolution . . . 12
Maximum measurement error . . . 12
Influence of ambient temperature . . . 13
Response time . . . 14
Warm-up time (according to IEC 62828-4) . . . 14

Installation . . . 14
Installation types . . . 14
Mounting location . . . 15
Orientation . . . 15
Installation instructions . . . 15
Beam angle . . . 16
Weather protective cover . . . 16
Flooding protection tube . . . 17
Installation with mounting bracket, adjustable . . . 17
Cantilever installation, with pivot . . . 18
Mounting with a pivotable mounting bracket . . . 19

Environment . . . 19
Ambient temperature range . . . 19
Storage temperature . . . 19
Climate class . . . 19
Operating height . . . 19
Degree of protection . . . 20
Vibration resistance . . . 20
Electromagnetic compatibility (EMC) . . . 20

Process . . . 21
Process temperature, process pressure . . . 21
Relative permittivity . . . 21

Mechanical construction . . . 22
Dimensions . . . 22
Weight . . . 22
Materials . . . 23
Connecting cable . . . 23

Operability . . . 23
Operation concept . . . 23
LED indicator . . . 24
Remote operation . . . 24
Supported operating tools . . . 24

Certificates and approvals . . . 25
Radio standard EN 302729 . . . 25
FCC . . . 26
Industry Canada . . . 26

Ordering information . . . 26
Identification . . . 27
Service . . . 27

Accessories . . . 27
Weather protective cover for device with cable entry from above . . . 27
Securing nut G 1½" . . . 28
Securing nut G 2" . . . 28
Uni adapter G 1½">G 2" . . . 29
Uni adapter MNPT 1½" > MNPT 2" . . . 29
Flooding protection tube 40 mm (1.5 in) . . . 29
Mounting bracket, adjustable, wall/rope/ceiling, 75 mm . . . 30
Mounting bracket, adjustable, wall, 200 mm . . . 31
Angle bracket for wall mounting . . . 32
Cantilever, pivotable . . . 33
Pivotable mounting bracket . . . 38
FAU40 alignment unit . . . 38
UNI flange 2"/DN50/50, PP . . . 40
UNI flange 3"/DN80/80, PP . . . 41
UNI flange 4"/DN100/100, PP . . . 42
Adjustable flange seal . . . 43
DeviceCare SFE100 . . . 43
Device Viewer . . . 43
RN22 . . . 44
RN42 . . . 44
Field Xpert SMT70 . . . 44
Field Xpert SMT77 . . . 44
SmartBlue app . . . 44

Documentation **44**
Standard documentation 44
Supplementary device-dependent documentation 44

Registered trademarks **44**

About this document

Symbols

Safety symbols

DANGER
This symbol alerts you to a dangerous situation. Failure to avoid this situation will result in serious or fatal injury.

WARNING
This symbol alerts you to a dangerous situation. Failure to avoid this situation can result in serious or fatal injury.

CAUTION
This symbol alerts you to a dangerous situation. Failure to avoid this situation can result in minor or medium injury.

NOTICE
This symbol contains information on procedures and other facts which do not result in personal injury.

Communication-specific symbols

Bluetooth®:
Wireless data transmission between devices over a short distance

Symbols for certain types of information

Permitted:

Procedures, processes or actions that are permitted.

Forbidden:

Procedures, processes or actions that are forbidden.

Additional information:

Reference to documentation:

Reference to page:

Series of steps: 1., 2., 3.

Result of an individual step:

Symbols in graphics

Item numbers: 1, 2, 3 ...

Series of steps: 1., 2., 3.

Views: A, B, C, ...

List of abbreviations

PN
Nominal pressure

MWP
Maximum working pressure
The maximum working pressure is indicated on the nameplate.

ToF
Time of Flight

DTM
Device Type Manager

ε_r (Dk value)
Relative dielectric constant

Operating tool

The term "operating tool" is used in place of the following operating software:
- FieldCare / DeviceCare, for operation via HART communication and PC
- SmartBlue app, for operation using an Android or iOS smartphone or tablet

PLC
Programmable logic controller (PLC)

Graphic conventions

- Installation, explosion and electrical connection drawings are presented in simplified format
- Devices, assemblies, components and dimensional drawings are presented in reduced-line format
- Dimensional drawings are not to-scale representations; the dimensions indicated are rounded off to 2 decimal places
- Unless otherwise described, flanges are presented with sealing surface form EN 1092-1; ASME B16.5, RF.

Function and system design

Measuring principle

The Micropilot is a "downward-looking" measuring system, operating based on the frequency modulated continuous wave method (FMCW). The antenna emits an electromagnetic wave at a continuously varying frequency. This wave is reflected by the product and received again by the antenna.

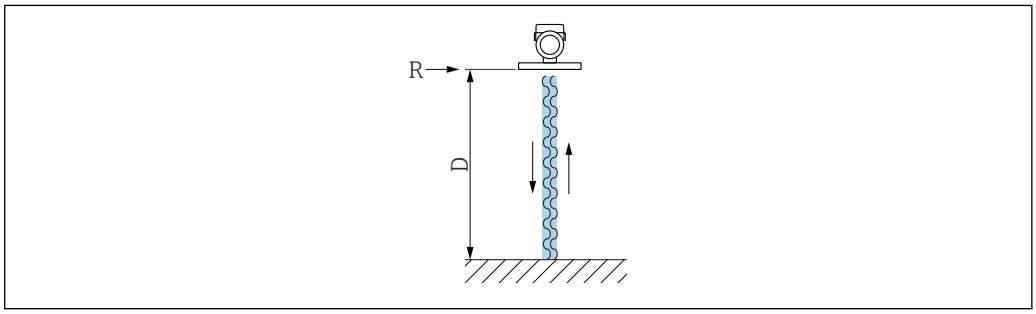

1 FMCW principle: Transmission and reflection of the continuous wave

R Reference point of measurement
D Distance between reference point and product surface

The frequency of this wave is modulated in the form of a sawtooth signal between two limit frequencies f_1 and f_2:

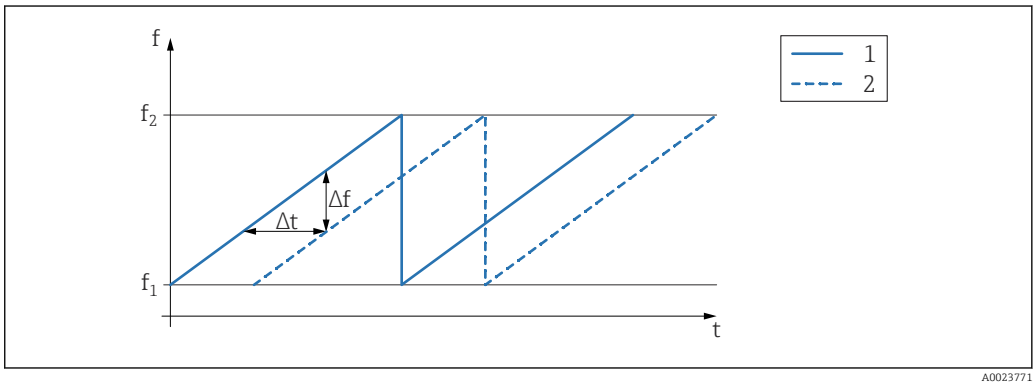

2 FMCW principle: Result of frequency modulation

1 Transmitted signal
2 Received signal

This results in the following difference frequency at any time between the transmitted signal and the received signal:

$\Delta f = k\,\Delta t$

where Δt is the run time and k is the specified increase in frequency modulation.

Δt is given by the distance D between the reference point R and the product surface:

$D = (c\,\Delta t)\ /\ 2$

where c is the wave velocity.

In summary, D can be calculated from the measured difference frequency Δf. D is then used to determine the fill level or flow rate.

Measuring system

A complete measuring system comprises:

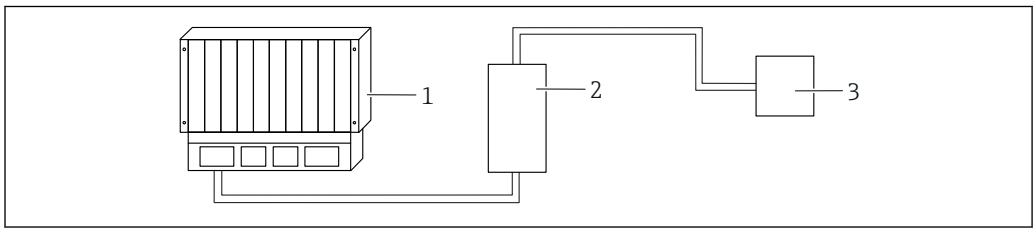

1 PLC (programmable logic controller)
2 RMA42/RIA45 (if necessary)
3 Device

Communication and data processing

Bluetooth

Dependability

IT security

Our warranty is valid only if the product is installed and used as described in the Operating Instructions. The product is equipped with security mechanisms to protect it against any inadvertent changes to the settings.

IT security measures, which provide additional protection for the product and associated data transfer, must be implemented by the operators themselves in line with their security standards.

Device-specific IT security

The device offers specific functions to support protective measures by the operator. These functions can be configured by the user and guarantee greater in-operation safety if used correctly. The user role can be changed with an access code (applies to operation via Bluetooth®).

Access via Bluetooth® wireless technology

Secure signal transmission via Bluetooth® wireless technology uses an encryption method tested by the Fraunhofer Institute.

- Without the SmartBlue app, the device is not visible via Bluetooth® wireless technology.
- Only one point-to-point connection is established between the device and a smartphone or tablet.
- The Bluetooth® wireless technology interface can be disabled via SmartBlue or an operating tool via digital communication.

Input

Measured variable

The measured variable is the distance between the reference point and the product surface.

The level is calculated based on **E**, the empty distance entered.

Measuring range

The measuring range starts at the point where the beam hits the tank floor. Levels below this point cannot be measured, particularly in the case of spherical bases or conical outlets.

Maximum measuring range

The maximum measuring range is 10 m (33 ft).

Usable measuring range

The usable measuring range depends on the medium's reflective properties, the installation position and any possible interference echoes.

In principle, measurement is possible up to the tip of the antenna.

Depending on the position of the product (angle of repose for solids) and to avoid any material damage from corrosive or aggressive media or deposit buildup on the antenna, the end of the measuring range should be selected 10 mm (0.4 in) before the tip of the antenna.

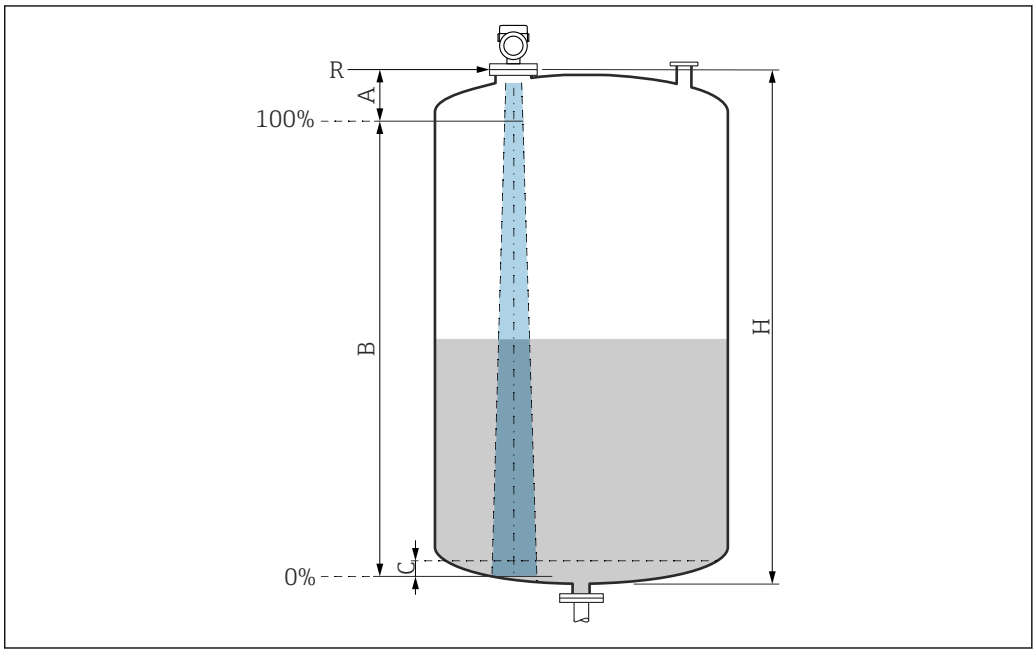

A *Antenna tip + 10 mm (0.4 in)*
B *Usable measuring range*
C *50 to 80 mm (1.97 to 3.15 in); medium ε_r ≤2*
H *Vessel height*
R *Reference point of measurement, varies depending on the antenna system (see mechanical construction section)*

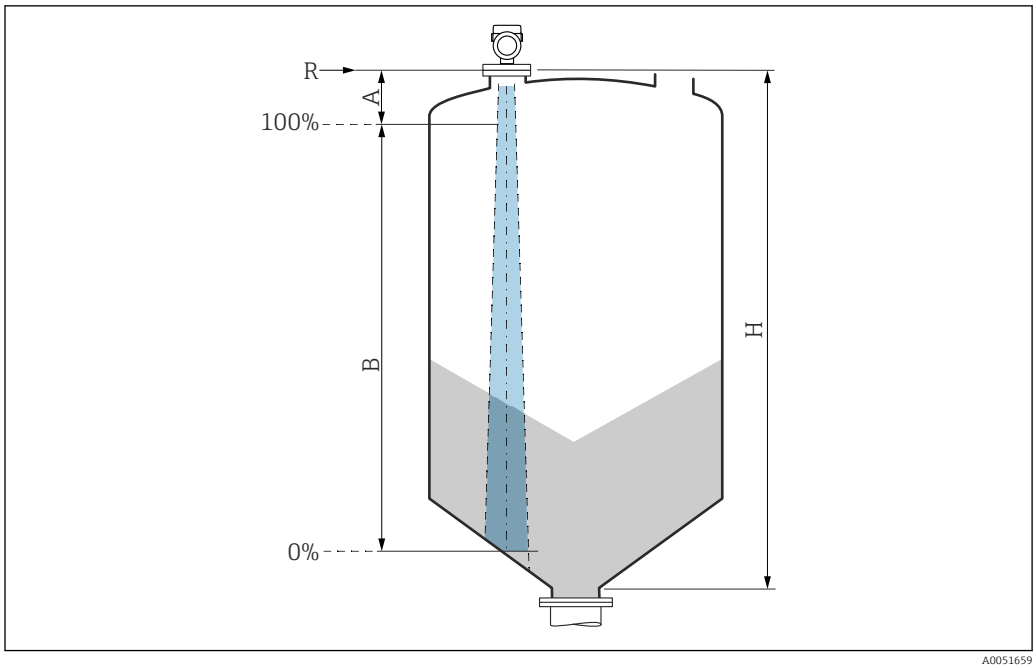

A *Antenna tip + 10 mm (0.4 in)*
B *Usable measuring range*
H *Vessel height*
R *Reference point of measurement, varies depending on the antenna system (see mechanical construction section)*

In the case of media with a low relative permittivity, $\varepsilon_r < 2$, the tank floor may be visible through the medium at very low levels (lower than level C). Reduced accuracy must be expected in this range. If this is not acceptable, the zero point should be positioned at a distance C above the tank bottom for these applications (see figure).

The media groups and the possible measuring range are described as a function of the application and media group in the following section. If the relative permittivity of the medium is not known, to ensure a reliable measurement assume the medium belongs to group B.

Media groups
- **A** (ε_r 1.4 to 1.9)
  Non-conductive liquids, e.g. liquefied gas
- **B** (ε_r 1.9 to 4)
  Non-conductive liquids, e.g. gasoline, oil, toluene, etc.
- **C** (ε_r 4 to 10)
  e.g. concentrated acid, organic solvents, ester, aniline, etc.
- **D** (ε_r >10)
  Conductive liquids, aqueous solutions, diluted acids, bases and alcohol

For the relative permittivity values (ε_r values) of many media commonly used in industry, please refer to:
- Relative permittivity (ε_r value), Compendium CP01076F
- The Endress+Hauser "DC Values app" (available for Android and iOS)

Measurement in storage vessel

Storage vessel - measuring conditions
Calm medium surface (e.g. bottom filling, filling via immersion tube or rare filling from above)

40 mm (1.5 in) antenna in storage vessel

	Media group	Measuring range
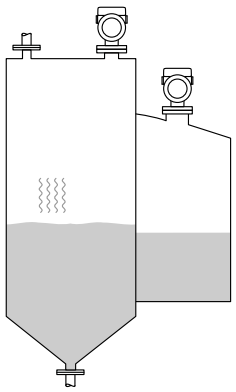	**A** (ε_r 1.4 to 1.9)	10 m (33 ft)
	B (ε_r 1.9 to 4)	10 m (33 ft)
	C (ε_r 4 to 10)	10 m (33 ft)
	D (ε_r >10)	10 m (33 ft)

Measurement in buffer vessel

Buffer vessel - measuring conditions
Moving medium surface (e.g. permanent free filling from above, mixing jets)

40 mm (1.5 in) antenna in buffer vessel

	Media group	Measuring range
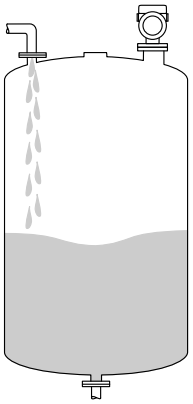	**A** (ε_r 1.4 to 1.9)	7 m (23 ft)
	B (ε_r 1.9 to 4)	10 m (33 ft)
	C (ε_r 4 to 10)	10 m (33 ft)
	D (ε_r >10)	10 m (33 ft)

Measurement in vessel with single-stage propeller agitator

Vessel with agitator - measuring conditions
Turbulent medium surface (e.g. from filling from above, stirrers and baffles)

40 mm (1.5 in) antenna in vessel with agitator

	Media group	Measuring range
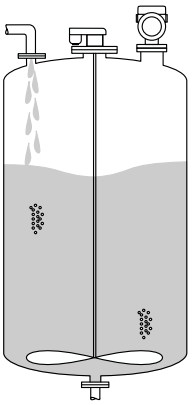	**A** (ε_r 1.4 to 1.9)	4 m (13 ft)
	B (ε_r 1.9 to 4)	5 m (16.4 ft)
	C (ε_r 4 to 10)	10 m (33 ft)
	D (ε_r >10)	10 m (33 ft)

Operating frequency

approx. 80 GHz

Up to eight devices can be installed in a tank without the devices mutually influencing one another.

Transmission power

- Peak power: <1.5 mW
- Average output power: <70 µW

Output

Output signal

- 4 to 20 mA
- The current output offers a choice of three different operating modes:
  - 4 to 20.5 mA
  - NAMUR NE 43: 3.8 to 20.5 mA (factory setting)
  - US mode: 3.9 to 20.5 mA

Signal on alarm for devices with current output

Current output
Signal on alarm in accordance with NAMUR recommendation NE 43.
- Max. alarm: can be set from 21.5 to 23 mA
- Min. alarm: < 3.6 mA (factory setting)

Operating tool via digital communication
Status signal (according to NAMUR Recommendation NE 107):
Plain text display

Load

In order to guarantee sufficient terminal voltage, a maximum load resistance R_L (including line resistance) must not be exceeded, depending on the supply voltage U of the supply unit.

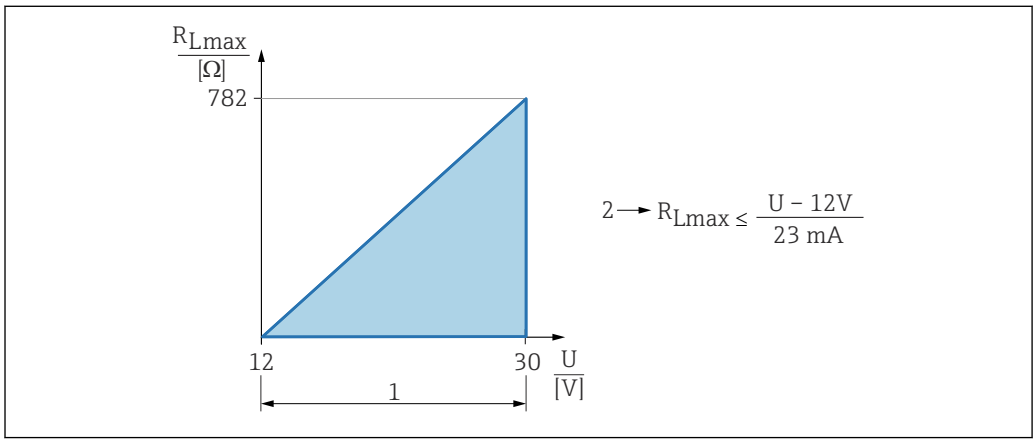

A0052602

1 Power supply 12 to 30 V
2 R_{Lmax} maximum load resistance
U Supply voltage

If load is too great:
- Failure current is indicated and error message is displayed (indication: MIN alarm current)
- Periodic checking to establish if it is possible to quit fault state

Operation via handheld terminal or PC with operating program: take minimum communication resistor of 250 Ω into consideration.

Damping

Damping affects all continuous outputs.
Factory setting: 0 s(can be set from 0 to 999 s)

Linearization

The linearization function of the device allows the conversion of the measured value into any unit of length, weight, flow or volume.

Pre-programmed linearization curves

Linearization tables for calculating the volume in the following vessels are pre-programmed into the device:
- Pyramid bottom
- Conical bottom
- Angled bottom
- Horizontal cylinder
- Sphere

Linearization tables for calculating the flow rate are pre-programmed into the device and include the following:
- Flumes
  - Khafagi-Venturi flume
  - Venturi flume
  - Parshall flume
  - Palmer-Bowlus flume
  - Trapezoidal flume (ISO 4359)
  - Rectangular flume (ISO 4359)
  - U-shaped flume (ISO 4359)
- Weirs
  - Trapezoidal weir
  - Rectangular broad-crested weir (ISO 3846)
  - Rectangular thin-plate weir (ISO 1438)
  - Triangular thin-plate weir (ISO 1438)
- Standard formula

Other linearization tables of up to 32 value pairs can be entered manually.

Totalizer

The device offers a totalizer which adds up the flow rate. The totalizer cannot be reset.

Power supply

Cable assignment

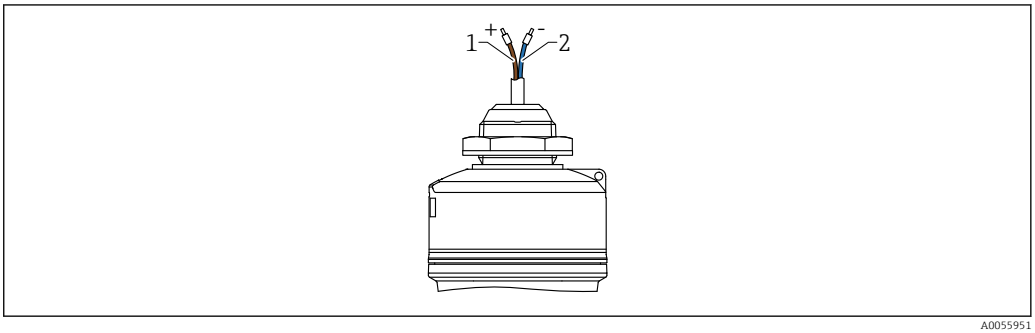

A0055951

3 Cable assignment, cable entry from above

1 Plus, brown wire
2 Minus, blue wire

Supply voltage

12 to 30 V_{DC} on a direct current power unit

The power unit must be safety-approved (e.g. PELV, SELV, Class 2) and must comply with the relevant protocol specifications.

Protective circuits against reverse polarity, HF influences and overvoltage peaks are installed.

Power consumption

To meet device safety specifications according to the IEC/EN 61010 standard, the installation must ensure that the maximum current is limited to 500 mA.

Potential equalization

No special measures for potential equalization are required.

Cable specification

Unshielded cable, wire cross-section 0.5 mm^2
- Resistant to UV and weather conditions as per ISO 4892-2
- Flame resistance according to IEC 60332-1-2

The device is available with a cable length of 10 m (32 ft).

Overvoltage protection

The device satisfies the IEC/DIN EN 61326-1 product standard (Table 2 Industrial environment). Depending on the type of connection (DC power supply, input line, output line), different test levels are used to prevent transient overvoltages (IEC/DIN EN 61000-4-5 Surge) in accordance with IEC/DIN EN 61326-1: Test level for DC power supply lines and IO lines: 1 000 V wire to ground.

Overvoltage category

In accordance with IEC/DIN EN 61010-1, the device is intended for use in networks with overvoltage protection category II.

Performance characteristics

Reference conditions

- As per IEC 62828-2
- Ambient temperature T_A = constant, in the range of +21 to +33 °C (+70 to +91 °F)
- Humidity φ = constant, in the range of: 5 to 80 % RH ± 5 %
- Atmospheric pressure p_U = constant, in the range of: 860 to 1 060 mbar (12.47 to 15.37 psi)
- Supply voltage: 24 V_{DC} ±3 V_{DC}
- Reflector: metal plate with diameter ≥ 1 m (40 in)
- No major interference echoes inside the signal beam

Resolution

Current output: < 1 µA

Digital: 1 mm (0.04 in)

Maximum measurement error

Reference accuracy

Accuracy

The accuracy is the sum of the non-linearity, non-repeatability and hysteresis.

For liquids:
- Measuring distance up to 0.25 m (0.82 ft): max. ±10 mm (±0.39 in)
- Measuring distance > 0.25 m (0.82 ft): ±5 mm (±0.2 in)

For solids:
- Measuring distance up to 0.8 m (2.6 ft): max. ±20 mm (±0.79 in)
- Measuring distance > 0.8 m (2.6 ft): ±10 mm (±0.39 in)

Non-repeatability
Non-repeatability is already included in the accuracy.
≤ 1 mm (0.04 in)

If conditions deviate from the reference operating conditions, the offset/zero point that results from the installation conditions can be up to ±4 mm (±0.16 in). This additional offset/zero point can be eliminated by entering a correction (**Level correction** parameter) during commissioning.

Differing values in near-range applications for liquids

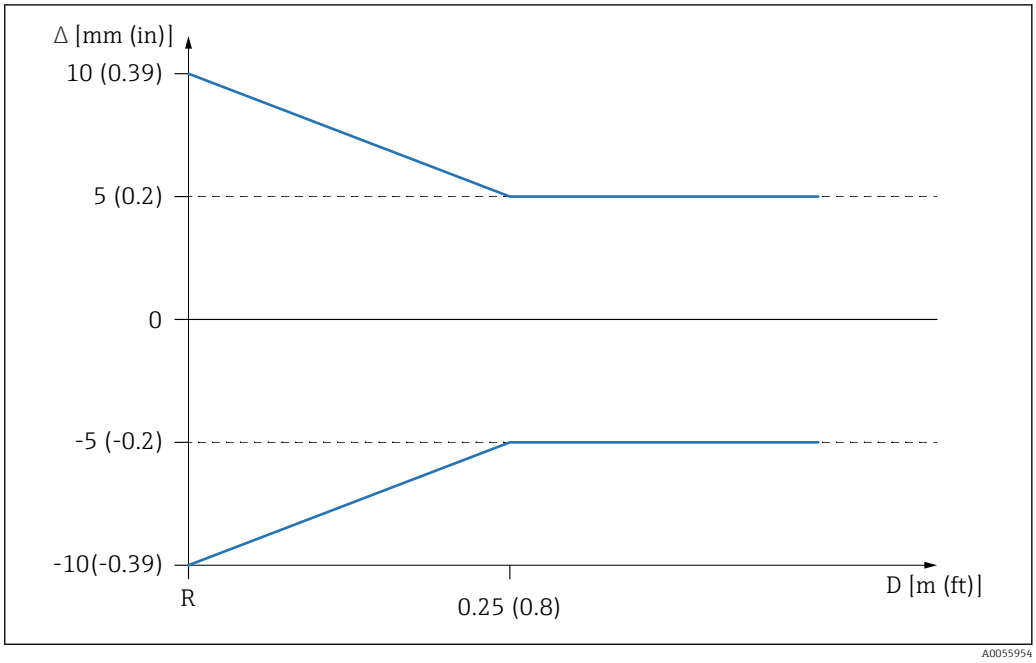

4 Maximum measurement error in near-range applications

Δ Maximum measurement error
R Reference point of the distance measurement
D Distance from reference point of antenna

Differing values in near-range applications for solids

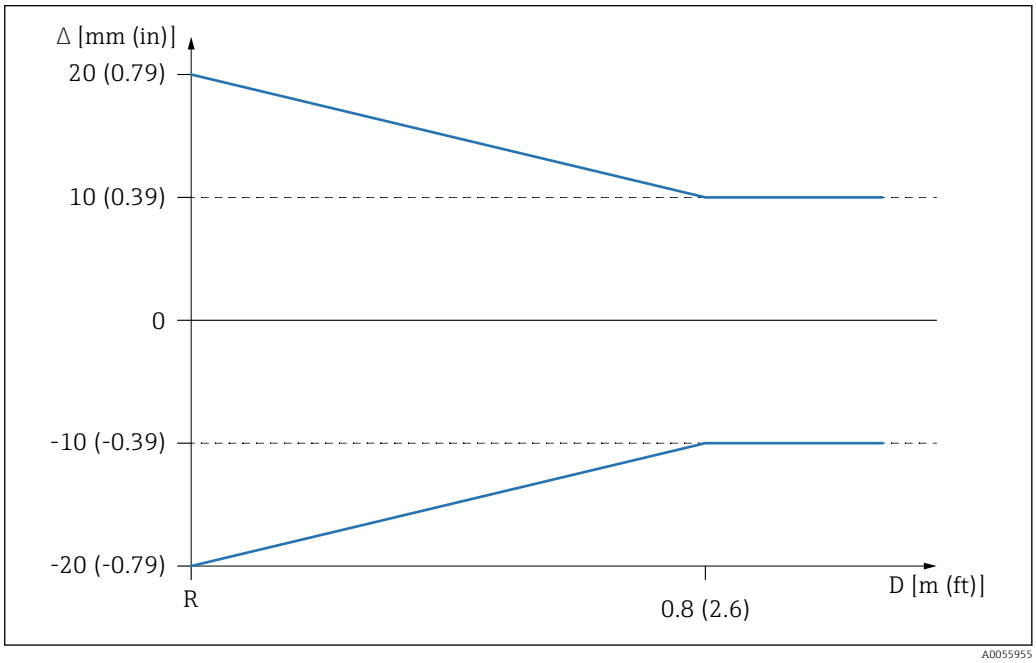

5 Maximum measurement error in near-range applications

Δ Maximum measurement error
R Reference point of the distance measurement
D Distance from reference point of antenna

Influence of ambient temperature

The output changes due to the effect of the ambient temperature with respect to the reference temperature.

The measurements are performed according to DIN EN IEC 61298-3 / DIN EN IEC 60770-1

Digital
Average T_C = ±2 mm (±0.08 in)/10 K

Analog (current output)
- Zero point (4 mA): average T_C = 0.02 %/10 K
- Span (20 mA): average T_C = 0.05 %/10 K

Response time

According to DIN EN IEC 61298-2 / DIN EN IEC 60770-1 , the step response time is the time following an abrupt change in the input signal up until the changed output signal has adopted 90 % of the steady-state value for the first time.

The response time can be configured.

The following step response times apply (in accordance with DIN EN IEC 61298-2/DIN EN IEC 60770-1) when damping is switched off:
- Measuring rate ≤ 250 ms at operating voltage 24 V
- Step response time < 1 s

Warm-up time (according to IEC 62828-4)

The warm-up time indicates the time required for the sensor to reach its maximum accuracy or performance after the supply voltage is energized.

Warm-up time: ≤ 30 s

Installation

Installation types

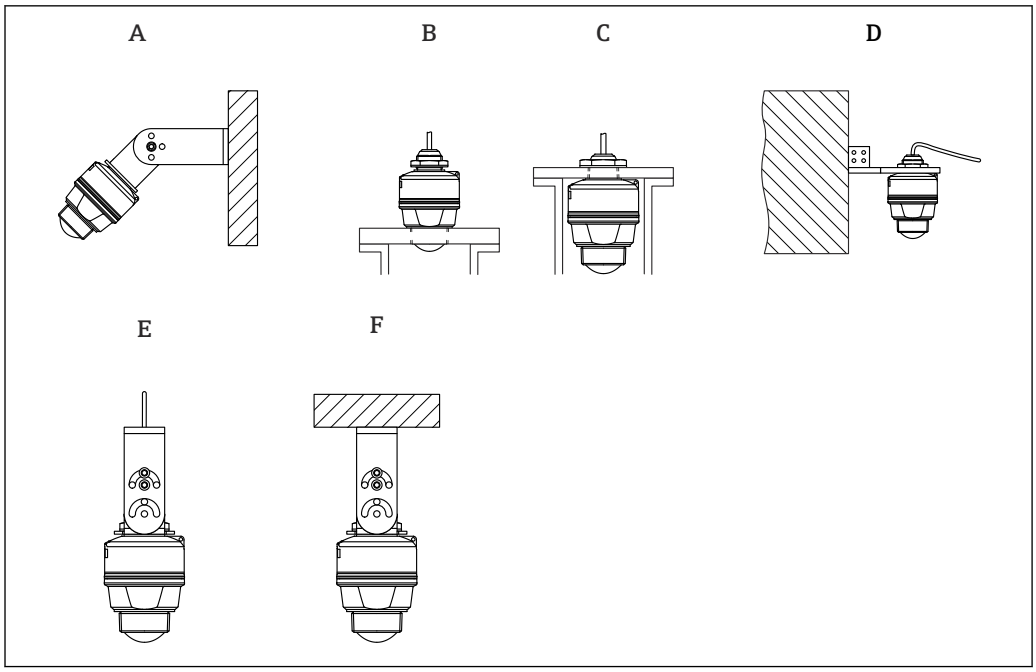

6 Wall or ceiling mount

A Wall mounting adjustable
B Tightened at antenna end process connection
C Tightened at cable entry process connection
D Wall mounting with cable entry process connection
E Rope mounting
F Ceiling installation

Caution!
- The sensor cables are not designed as supporting cables. Do not use them for suspension purposes.
- For rope mounting, the rope must be provided by the customer.
- Always operate the device in a vertical position in free-space applications.

Mounting location

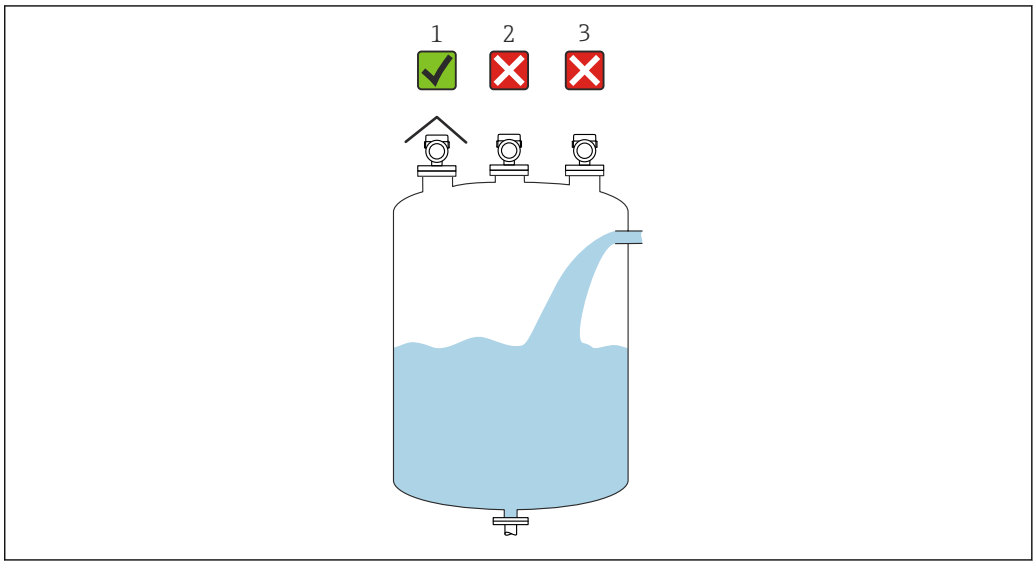

A0055811

1 *Use of a weather protection cover; protection from direct sunlight or rain*
2 *Installation in the center, interference can cause incorrect signal evaluation*
3 *Do not install above the filling curtain*

Orientation

Internal vessel fittings

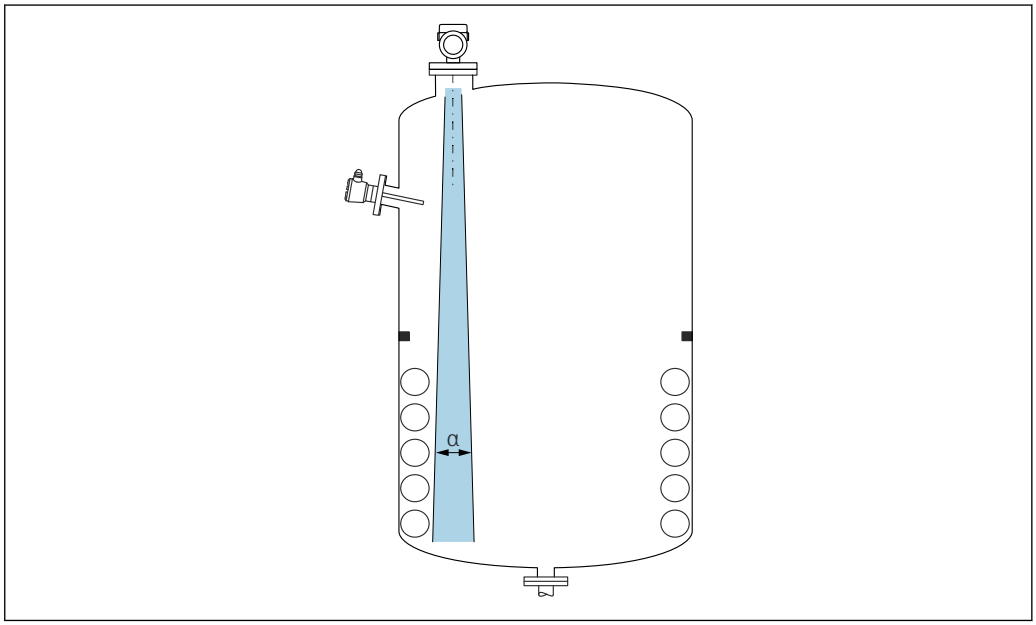

A0031777

Avoid internal fittings (point level switches, temperature sensors, struts, vacuum rings, heating coils, baffles etc.) inside the signal beam. Pay attention to the beam angle **α**.

Vertical alignment of antenna axis

Align the antenna so that it is perpendicular to the product surface.

The maximum reach of the antenna can be reduced, or additional interference signals can occur, if the antenna is not installed perpendicular to the product.

Installation instructions

To ensure optimum measurement, the antenna should protrude from the nozzle. The interior of the nozzle must be smooth and must not contain any edges or welded joints. The edge of the nozzle should be rounded if possible.

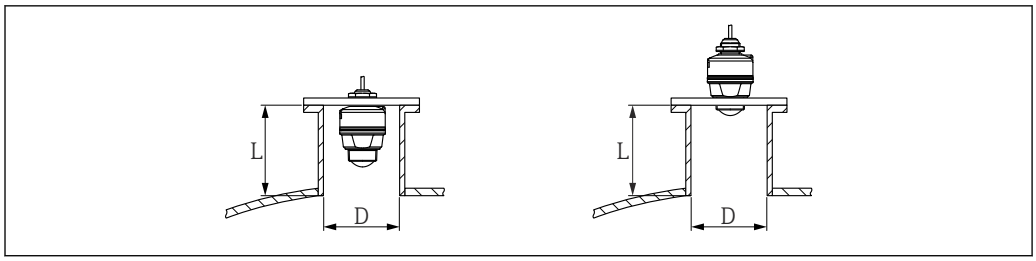

7 Nozzle installation, 40 mm (1.5 in) antenna

The maximum nozzle length **L** depends on the nozzle diameter **D**.

Please note the limits for the diameter and length of the nozzle.

40 mm (1.5 in) antenna, installation outside nozzle
- D: min. 40 mm (1.5 in)
- L: max. (D - 30 mm (1.2 in)) × 7.5

40 mm (1.5 in) antenna, installation inside nozzle
- D: min. 80 mm (3 in)
- L: max. 100 mm (3.94 in) + (D - 30 mm (1.2 in)) × 7.5

Beam angle

Calculation

The beam angle is defined as the angle α at which the energy density of the radar waves reaches half the value of the maximum energy density (3dB width). Microwaves are also emitted outside the signal beam and can be reflected off interfering installations.

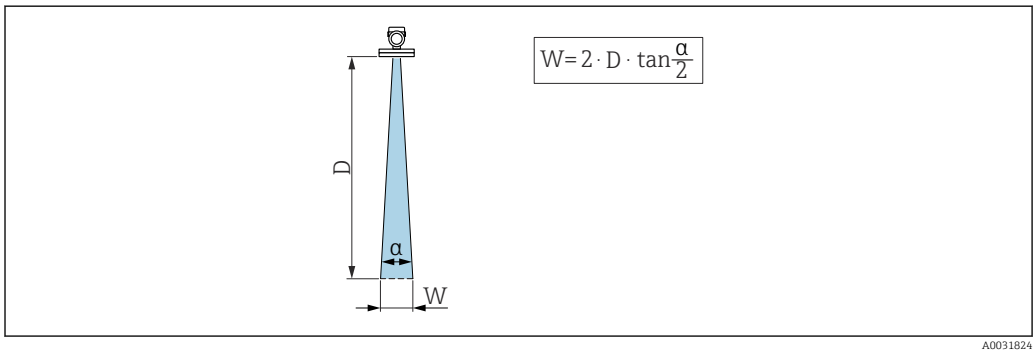

8 Relationship between beam angle α, distance D and beamwidth diameter W

The beamwidth diameter **W** depends on the beam angle **α** and the distance **D**.

Antenna 40 mm (1.5 in), α = 8 °

W = D × 0.14	D	W
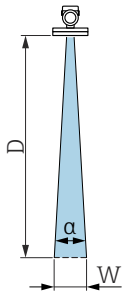	5 m (16 ft)	0.70 m (2.29 ft)
	10 m (33 ft)	1.40 m (4.58 ft)

Weather protective cover

A weather protective cover is recommended for outdoor use.

It can be ordered as an optional accessory.

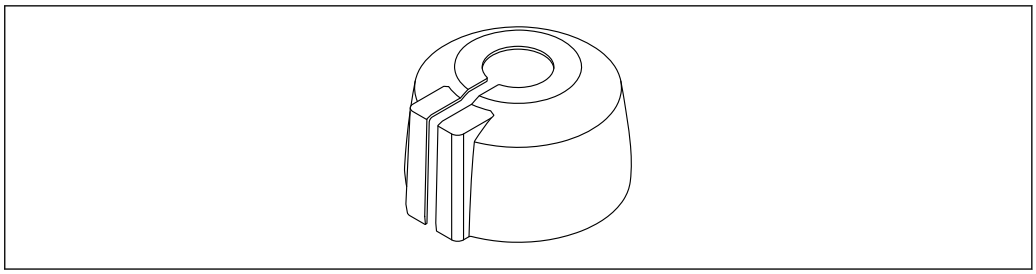

A0055999

9 *Weather protective cover, cable entry from above*

The sensor is not completely covered by the weather protective cover.

Flooding protection tube

The flooding protection tube ensures the sensor measures the maximum level even if it is completely flooded.

It can be ordered as an optional accessory.

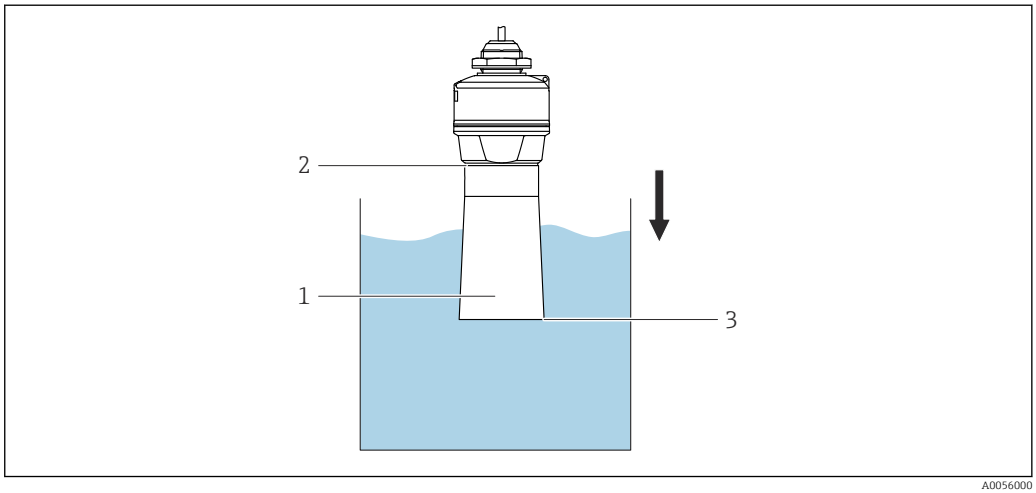

A0056000

10 *Function of flooding protection tube*

1 *Air pocket*
2 *O-ring (EPDM) seal*
3 *Max. level*

The tube is screwed directly onto the sensor and seals off the system by means of an O-ring making it air-tight. In the event of flooding, the air pocket that forms in the tube ensures the measurement of the maximum level at the end of the tube.

Installation with mounting bracket, adjustable

The mounting bracket can be ordered as an optional accessory.

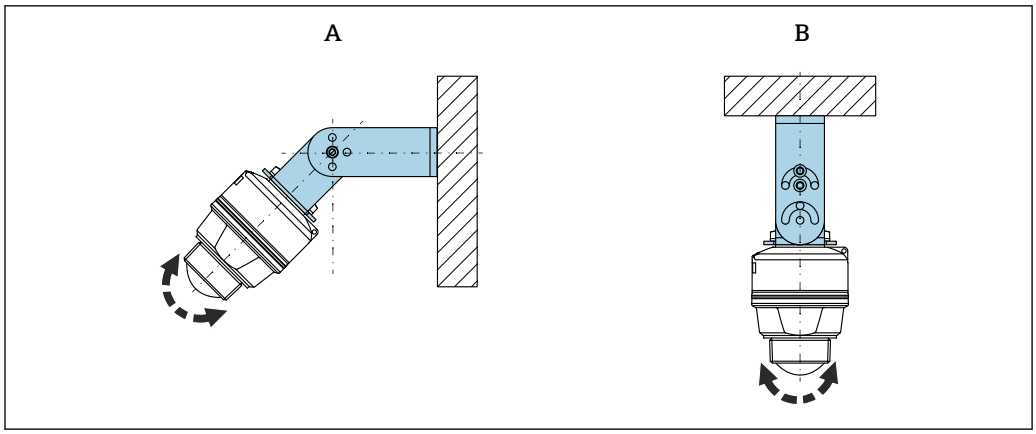

11 Installation with mounting bracket, adjustable

A Mounting bracket, adjustable for 40 mm (1.5 in) antenna, wall mounting
B Mounting bracket, adjustable for 40 mm (1.5 in) antenna, ceiling mounting

- Wall or ceiling installation is possible.
- Using the mounting bracket, position the antenna so that it is perpendicular to the product surface.

NOTICE

There is no conductive connection between the mounting bracket and transmitter housing.
Electrostatic charging possible.
▶ Integrate the mounting bracket in the local potential equalization system.

Rope mounting

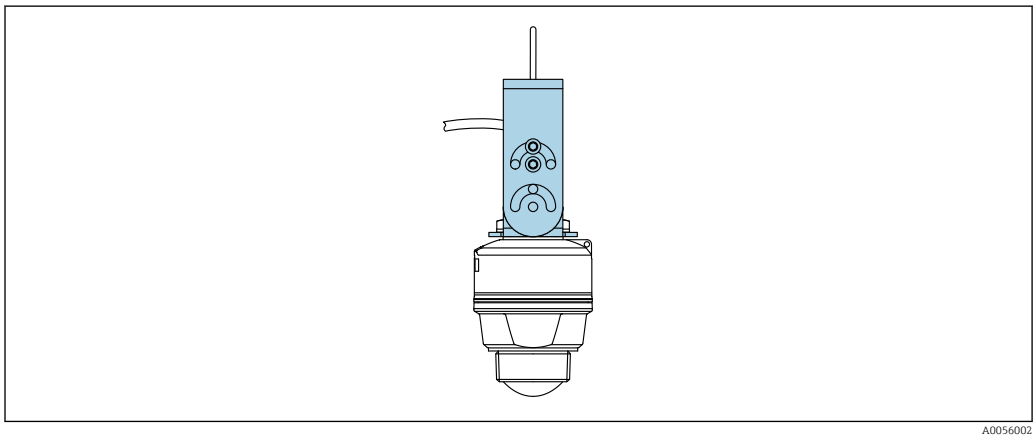

12 Installation with rope mounting

Mounting bracket, adjustable for 40 mm (1.5 in) antenna, rope mounting

Align the antenna so that it is perpendicular to the product surface.

In the case of rope mounting, note that the cable should not be used to suspend the device. The use of a separate rope is required.

Cantilever installation, with pivot

The cantilever, wall bracket and mounting frame can be ordered as accessories.

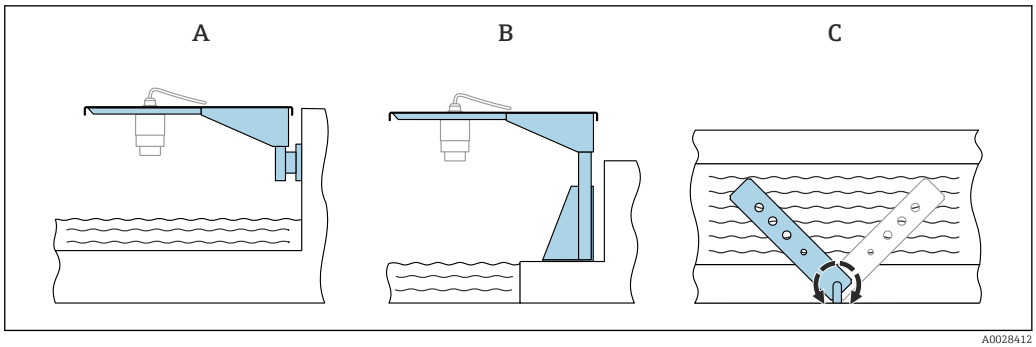

13 Cantilever installation, with pivot

A Cantilever with wall bracket (side view)
B Cantilever with mounting frame (side view)
C Cantilever can be turned, e.g. in order to position the device over the center of the flume (top view)

NOTICE

There is no conductive connection between the mounting bracket and transmitter housing.
Electrostatic charging possible.
▶ Integrate the mounting bracket in the local potential equalization system.

Mounting with a pivotable mounting bracket

The pivotable mounting bracket can be ordered as an optional accessory.

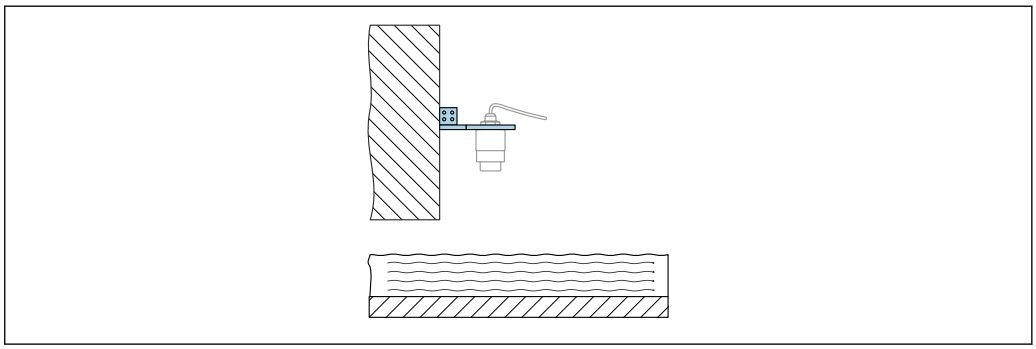

14 Pivotable and adjustable cantilever with wall bracket (e.g. to align the device with the center of a flume)

NOTICE

There is no conductive connection between the mounting bracket and transmitter housing.
Electrostatic charging possible.
▶ Integrate the mounting bracket in the local potential equalization system.

Environment

Ambient temperature range

Measuring instrument: −40 to +60 °C (−40 to +140 °F)

If operating outdoors in strong sunlight:
- Mount the device in the shade.
- Avoid direct sunlight, particularly in warmer climatic regions.
- Use a weather protective cover.

Storage temperature

−40 to +80 °C (−40 to +176 °F)

Climate class

According to IEC 60068-2-38 test Z/AD (relative humidity 4 to 100 %).

Operating height

Up to 5 000 m (16 404 ft) above sea level

Degree of protection	Test as per IEC 60529 Edition 2.2 2013-08/DIN EN 60529 2014-09 and NEMA 250-2014: ▪ IP66, NEMA Type 4X ▪ IP68, NEMA Type 6P (24 h at 1.83 m (6.00 ft) under water)
Vibration resistance	▪ Stochastic noise (random sweep) as per DIN EN 60068-2-64 Case 2/ IEC 60068-2-64 Case 2 ▪ Guaranteed for 5 to 2 000 Hz: 1.25 $(m/s^2)^2$/Hz, ~ 5 g
Electromagnetic compatibility (EMC)	▪ Electromagnetic compatibility as per EN 61326 series and NAMUR recommendation EMC (NE21) ▪ Maximum measured error during EMC testing: < 0.5 % of the span. For more details, refer to the EU Declaration of Conformity (www.endress.com/downloads).

Process

Process temperature, process pressure

WARNING

The maximum pressure for the device depends on the lowest-rated component with regard to pressure (components are: process connection, optional mounted parts or accessories).

- Only operate the device within the specified limits for the components!
- MWP (Maximum Working Pressure): The MWP is specified on the nameplate. This value refers to a reference temperature of +20 °C (+68 °F) and may be applied to the device for an unlimited time. Note temperature dependence of MWP. For flanges, refer to the following standards for the permitted pressure values at higher temperatures: EN 1092-1 (with regard to their stability/temperature property, the materials 1.4435 and 1.4404 are grouped together under EN 1092-1; the chemical composition of the two materials can be identical), ASME B16.5, JIS B2220 (the latest version of the standard applies in each case). MWP data that deviate from this are provided in the relevant sections of the Technical Information.
- The Pressure Equipment Directive (2014/68/EU) uses the abbreviation **PS** . This corresponds to the maximum working pressure (MWP) of the device.

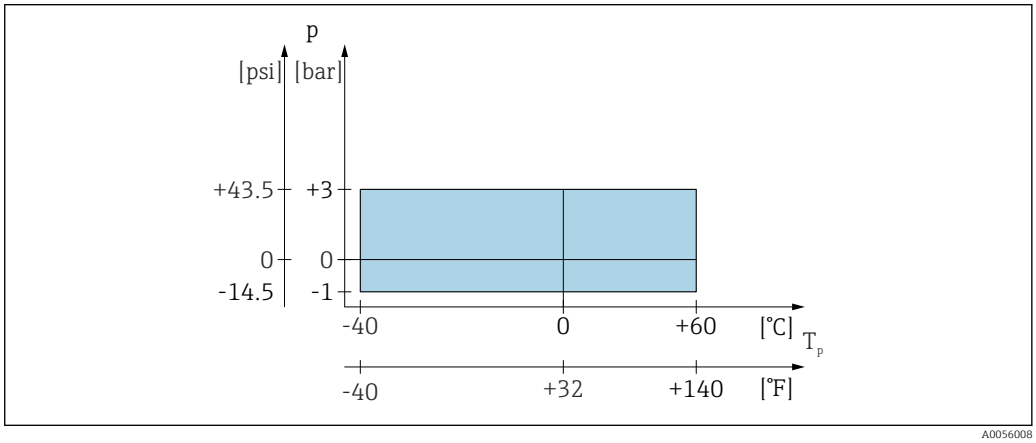

15 *Permitted range for process temperature and process pressure*

Process temperature range
−40 to +60 °C (−40 to +140 °F)

Process pressure range, 40 mm (1.5 in) antenna
- p_{gauge} = −1 to 3 bar (−14.5 to 43.5 psi)
- p_{abs} < =4 bar (58 psi)

The pressure range may be further restricted in the case of a CRN approval.

Relative permittivity

For liquids
- $\varepsilon_r \geq 1.8$
- Contact Endress+Hauser for lower ε_r values

For bulk solids
$\varepsilon_r \geq 1.6$

For applications with a lower relative permittivity than indicated, contact Endress+Hauser.

For the relative permittivity values (ε_r values) of many media commonly used in industry, please refer to:
- Relative permittivity (ε_r value), Compendium CP01076F
- The Endress+Hauser "DC Values app" (available for Android and iOS)

Mechanical construction

Dimensions

40 mm (1.5 in) antenna, cable entry from above

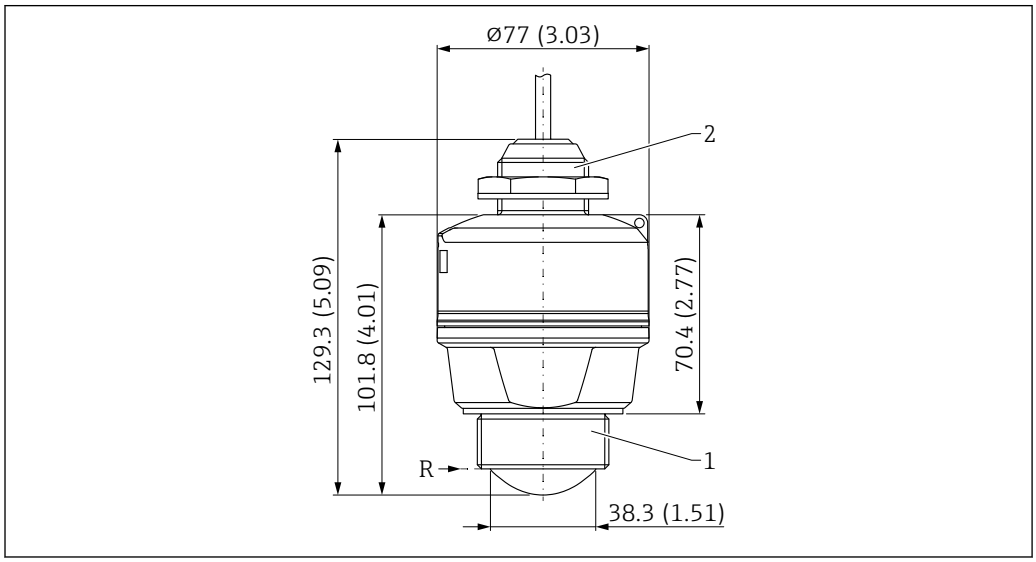

16 Dimensions; 40 mm (1.5 in) antenna with cable entry from above. Unit of measurement mm (in)

R Reference point of the measurement
1 Antenna end process connection, thread
2 Cable entry from above process connection

Counter nut, cable entry from above process connection

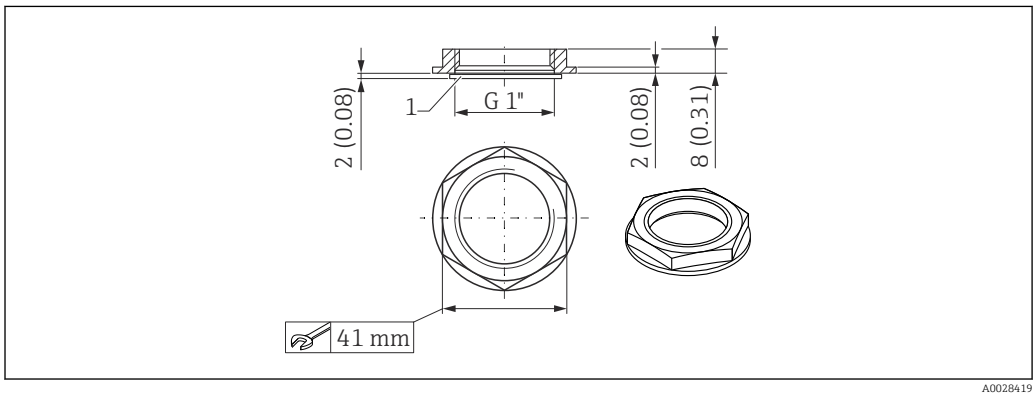

17 Dimensions; counter nut, cable entry from above process connection. Unit of measurement mm (in)

1 Seal

- The counter nut with seal (EPDM) is included in the scope of delivery
- Material: PA6.6

Weight

Weight (including 10 m (33 ft) cable)
Device with 40 mm (1.5 in) antenna: Approx. 0.7 kg (1.5 lb)

Materials

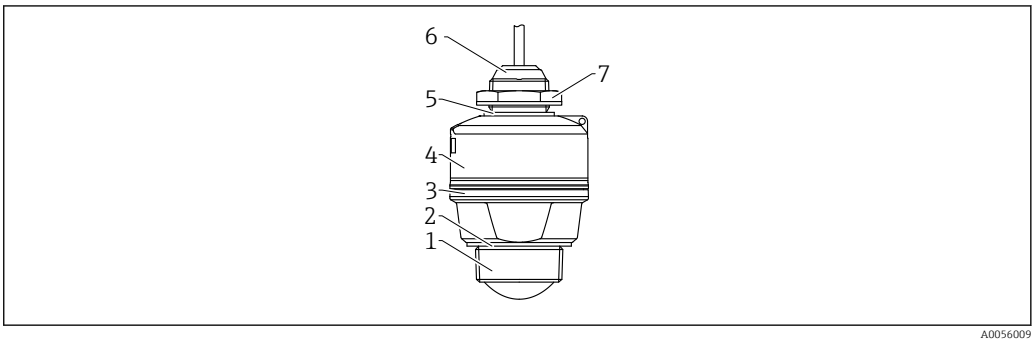

18 Overview of materials; 40 mm (1.5 in) antenna, cable entry thread

1 *Antenna end process connection; PVDF*
2 *EPDM seal (for G 1½" thread)*
3 *PBT/PC design ring*
4 *PBT/PC sensor housing*
5 *EPDM seal*
6 *Cable entry process connection: PBT/PC*
7 *Counter nut; PA6.6*

Connecting cable

Standard length: 10 m (33 ft)

If longer cable lengths are required, an extension cable must be used.

In this case, the total cable length (sensor cable + extension cable) must not exceed 300 m (984 ft).

Material : PVC

Operability

Operation concept

Operator-oriented menu structure for user-specific tasks
- User navigation
- Diagnostics
- Application
- System

Quick and safe commissioning
- Interactive wizard with graphical interface for guided commissioning in DeviceCare or SmartBlue app
- Menu guidance with brief descriptions of the individual parameter functions

Integrated data memory
Up to 100 event messages recorded in the device

Efficient diagnostics increase measurement reliability
- Remedial measures are integrated in plain text
- Various simulation options

Bluetooth
- Quick and easy setup with the SmartBlue app or FieldXpert SMT70/SMT77
- No additional tools or adapters needed
- Encrypted single point-to-point data transmission (tested by Fraunhofer Institute) and password-protected communication via *Bluetooth*® wireless technology

LED indicator

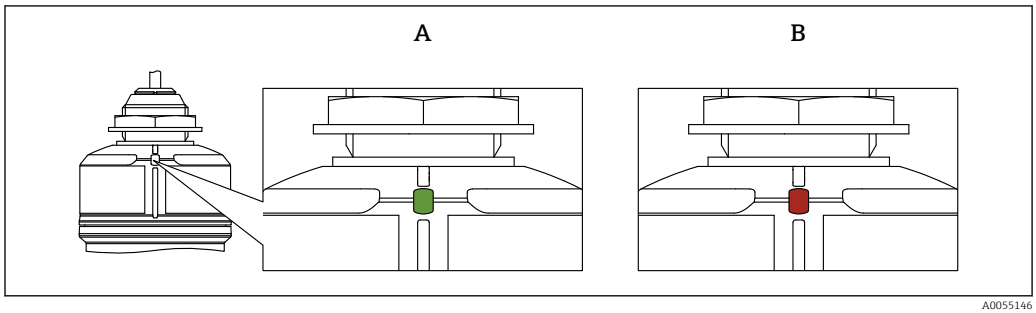

19 LED indicator on the device

A Green LED
B Red LED

Functions:
- Displays the operating status
  - Operation (green)
  - Fault (red)
- Displays an active Bluetooth connection (flashing)

Remote operation

Operation via Bluetooth® wireless technology

Prerequisite:

Smartphone or tablet with Endress+Hauser SmartBlue app or PC with DeviceCare from version 1.07.07 or FieldXpert SMT70/SMT77

The connection has a range of up to 25 m (82 ft). The range can vary depending on environmental conditions such as attachments, walls or ceilings.

Supported operating tools

Smartphone or tablet with Endress+Hauser SmartBlue app or DeviceCare, version 1.07.07 and higher.

Certificates and approvals

Current certificates and approvals for the product are available at www.endress.com on the relevant product page:

1. Select the product using the filters and search field.
2. Open the product page.
3. Select **Downloads**.

Radio standard EN 302729

The devices are approved for unrestricted use inside and outside closed containers in countries of the EU and the EFTA. As a prerequisite, the countries must have already implemented this standard.

The standard is already implemented in the following countries:

Belgium, Bulgaria, Germany, Denmark, Estonia, France, Greece, UK, Ireland, Iceland, Italy, Liechtenstein, Lithuania, Latvia, Malta, The Netherlands, Norway, Austria, Poland, Portugal, Romania, Sweden, Switzerland, Slovakia, Spain, Czech Republic and Cyprus.

Implementation is still underway in all of the countries not listed.

Please note the following for operation of the devices outside of closed vessels:
- Installation must be carried out by properly trained, expert staff
- The device antenna must be installed in a fixed location pointing vertically downwards
- The mounting site must be located at a distance of 4 km (2.49 mi) from the astronomy stations listed below or otherwise approval must be provided by the relevant authority. If a device is installed within a radius of 4 to 40 km (2.49 to 24.86 mi) around one of the listed stations, it must not be installed at a height of more than 15 m (49 ft) above the ground

Astronomy stations

Country	Name of the station	Latitude	Longitude
Germany	Effelsberg	50° 31' 32" North	06° 53' 00" East
Finland	Metsähovi	60° 13' 04" North	24° 23' 37" East
	Tuorla	60° 24' 56" North	24° 26' 31" East
France	Plateau de Bure	44° 38' 01" North	05° 54' 26" East
	Floirac	44° 50' 10" North	00° 31' 37" West
Great Britain	Cambridge	52° 09' 59" North	00° 02' 20" East
	Damhall	53° 09' 22" North	02° 32' 03" West
	Jodrell Bank	53° 14' 10" North	02° 18' 26" West
	Knockin	52° 47' 24" North	02° 59' 45" West
	Pickmere	53° 17' 18" North	02° 26' 38" West
Italy	Medicina	44° 31' 14" North	11° 38' 49" East
	Noto	36° 52' 34" North	14° 59' 21" East
	Sardinia	39° 29' 50" North	09° 14' 40" East
Poland	Fort Skala Krakow	50° 03' 18" North	19° 49' 36" East
Russia	Dmitrov	56° 26' 00" North	37° 27' 00" East
	Kalyazin	57° 13' 22" North	37° 54' 01" East
	Pushchino	54° 49' 00" North	37° 40' 00" East
	Zelenchukskaya	43° 49' 53" North	41° 35' 32" East
Sweden	Onsala	57° 23' 45" North	11° 55' 35" East
Switzerland	Bleien	47° 20' 26" North	08° 06' 44" East

Country	Name of the station	Latitude	Longitude
Spain	Yebes	40° 31' 27" North	03° 05' 22" West
	Robledo	40° 25' 38" North	04° 14' 57" West
Hungary	Penc	47° 47' 22" North	19° 16' 53" East

As a general rule, the requirements outlined in EN 302729 must be observed.

FCC

This device complies with Part 15 of the FCC rules. Operation is subject to the following two conditions: (1) This device may not cause harmful interference, and (2) this device must accept any interference received, including interference that may cause undesired operation.

[Any] changes or modifications not expressly approved by the party responsible for compliance could void the user's authority to operate the equipment.

The devices are compliant with the FCC Code of Federal Regulations, CFR 47, Part 15, Sections 15.205, 15.207, 15.209.

To comply with FCC RF Exposure requirements for an uncontrolled environment, this device must be installed and operated to assure a minimum separation distance of at least 20 cm.

In addition, the devices are compliant with Section 15.256. For these LPR (Level Probe Radar) applications the devices must be professionally installed in a downward operating position. In addition, the devices are not allowed to be mounted in a zone of 4 km (2.49 mi) around RAS stations and within a radius of 40 km (24.86 mi) around RAS stations the maxium operation height of devices is 15 m (49 ft) above ground.

Industry Canada

Canada CNR-Gen Section 8.4

This device complies with Industry Canada licence-exempt RSS standard(s). Operation is subject to the following two conditions: (1) This device may not interference, and (2) this device must accept any interference, including interference that may cause undesired operation of the device.

Le présent appareil est conforme aux CNR d'Industrie Canada applicables aux appareils radio exempts de licence. L'exploitation est autorisée aux deux conditions suivantes : (1) l'appareil ne doit pas produire de brouillage, et (2) l'utilisateur de l'appareil doit accepter tout brouillage radioélectrique subi, même si le brouillage est susceptible d'en compromettre le fonctionnement.

[Any] changes or modifications not expressly approved by the party responsible for compliance could void the user's authority to operate the equipment.

- The installation of the LPR/TLPR device shall be done by trained installers, in strict compliance with the manufacturer's instructions.
- The use of this device is on a "no-interference, no-protection" basis. That is, the user shall accept operations of high-powered radar in the same frequency band which may interfere with or damage this device. However, devices found to interfere with primary licensing operations will be required to be removed at the user's expense.
- To comply with ISED RF Exposure requirements for an uncontrolled environment, this device must be installed and operated to assure a minimum separation distance of at least 20 cm.
- The installer/user of this device shall ensure that it is at least 10 km from the Dominion Astrophysical Radio Observatory (DRAO) near Penticton, British Columbia. The coordinates of the DRAO are latitude 49°19′15″ N and longitude 119°37′12″ W. For devices not meeting this 10 km separation (e.g., those in the Okanagan Valley, British Columbia,) the installer/user must coordinate with, and obtain the written concurrence of, the Director of the DRAO before the equipment can be installed or operated. The Director of the DRAO may be contacted at 250-497-2300 (tel.) or 250-497-2355 (fax). (Alternatively, the Manager, Regulatory Standards Industry Canada, may be contacted.)

Ordering information

Detailed ordering information is available from your nearest sales organization www.addresses.endress.com or in the Product Configurator at www.endress.com:

1. Select the product using the filters and search field.

2. Open the product page.
3. Select **Configuration**.

Product Configurator - the tool for individual product configuration
- Up-to-the-minute configuration data
- Depending on the device: Direct input of measuring point-specific information such as measuring range or operating language
- Automatic verification of exclusion criteria
- Automatic creation of the order code and its breakdown in PDF or Excel output format
- Ability to order directly in the Endress+Hauser Online Shop

Identification

Measuring point (TAG)

The device can be ordered with a tag name.

Location of tagging
In the additional specification, select:
- Stainless steel tag plate
- TAG provided by the customer
- IEC 61406 stainless steel TAG
- IEC 61406 stainless steel, stainless steel TAG
- IEC 61406 stainless steel TAG, enclosed plate

Definition of tag name
In the additional specification, specify:
3 lines of maximum 18 characters each
The specified tag name appears on the selected plate.

Visualization in SmartBlue app
The first 32 characters of the tag name
The tag name can always be changed specifically for the measuring point via Bluetooth.

Display in electronic nameplate (ENP)
The first 32 characters of the tag name

For details, refer to document SD03128P

Service

The following services, among others, can be selected using the Product Configurator.

- Set medium
- Set damping
- Set max. alarm current
- Customized empty/full calibration
- Product documentation on paper
  A printed (hard copy) version of test reports can optionally be ordered via the **Service**, Version, **Product documentation on paper** option.

Accessories

Accessories currently available for the product can be selected via the Product Configurator at www.endress.com:

1. Select the product using the filters and search field.
2. Open the product page.
3. Select **Spare parts & Accessories**.

The accessories can be partially ordered via the "Accessory enclosed" product structure.

Weather protective cover for device with cable entry from above

The sensor is not completely covered.

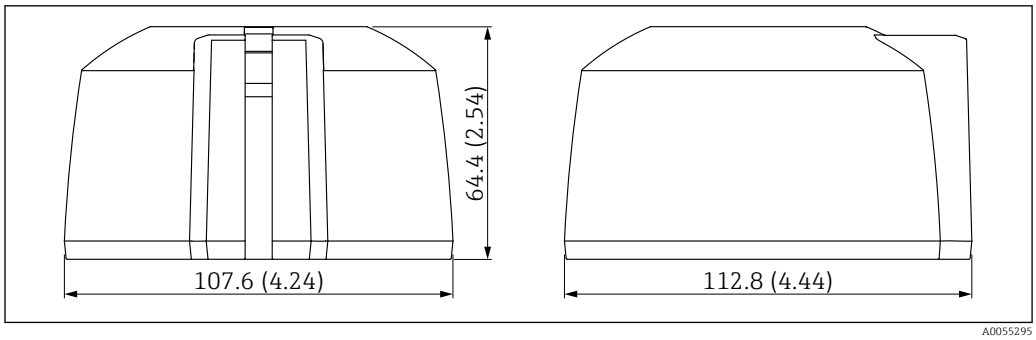

20 Dimensions for weather protective cover G1/NPT1, cable entry from above. Unit of measurement mm (in)

Material
PBT/PC

Order code
71662413

Securing nut G 1½"

Suitable for devices with G 1½" and MNPT 1½" process connection.

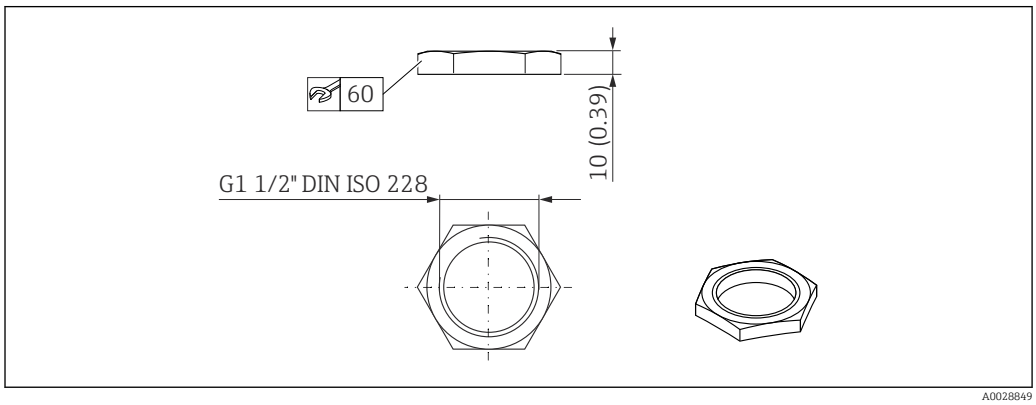

21 Dimensions of securing nut. Unit of measurement mm (in)

Material
PC

Order code
52014146

Securing nut G 2"

Suitable for devices with G 2" and MNPT 2" antenna end process connection.

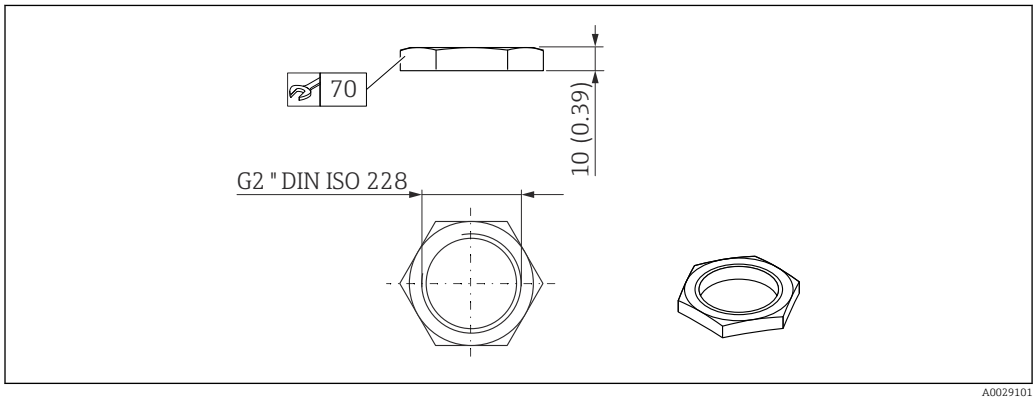

22 Dimensions of securing nut. Unit of measurement mm (in)

Material
PC

Order code
52000598

Uni adapter G 1½">G 2"

Temperature range −40 to 45 °C (−40 to 113 °F)

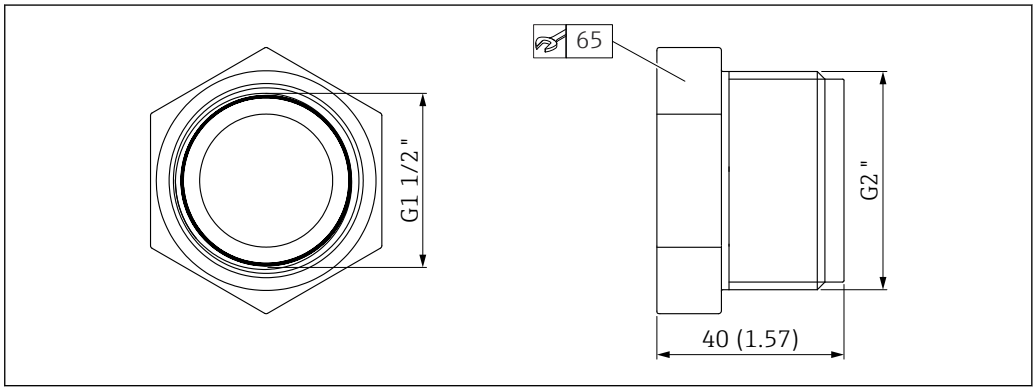

23 Dimensions of Uni adapter

Material
PVC

Order code
71662415

Uni adapter MNPT 1½" > MNPT 2"

Temperature range −40 to 65 °C (−40 to 150 °F)

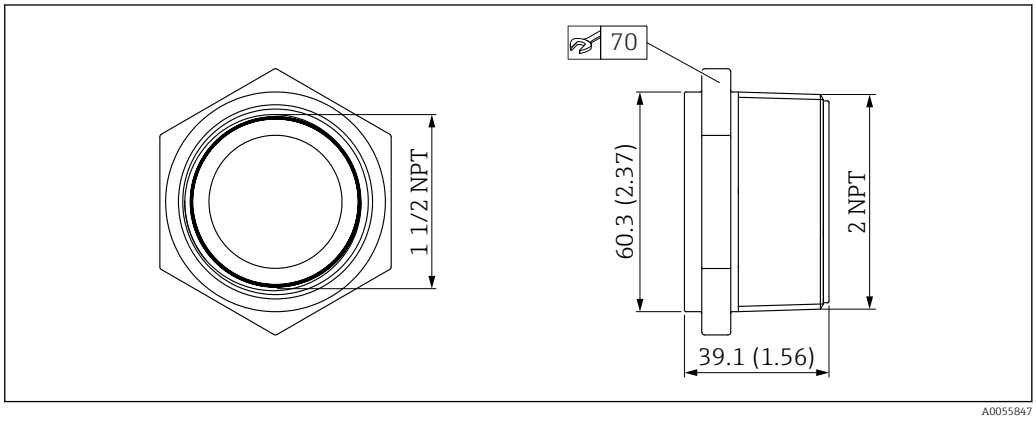

24 Dimensions of Uni adapter

Material
PP

Order code
71666515

Flooding protection tube 40 mm (1.5 in)

Suitable for use with devices with a 40 mm (1.5 in) antenna and G 1½" antenna end thread process connection

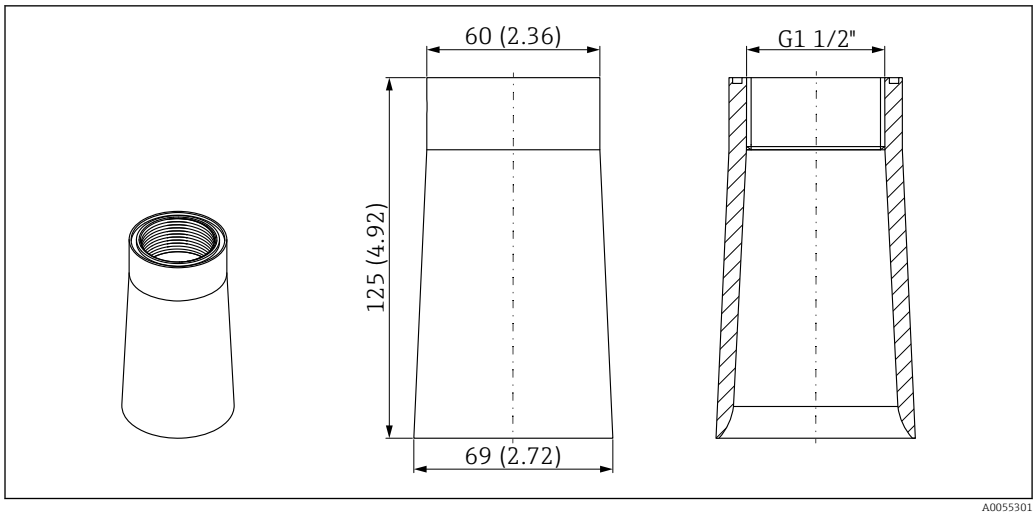

25 Flooding protection tube dimensions 40 mm (1.5 in). Unit of measurement mm (in)

Material
PP

Order code
71091216

Mounting bracket, adjustable, wall/rope/ ceiling, 75 mm

The mounting bracket can be used for mounting on a wall, a rope or a ceiling.

Two versions are available:
- Cable entry process connection G 1"/NPT 1"
- Antenna end process connection G 1½"/NPT 1½"

Cable entry process connection G 1"/NPT 1"

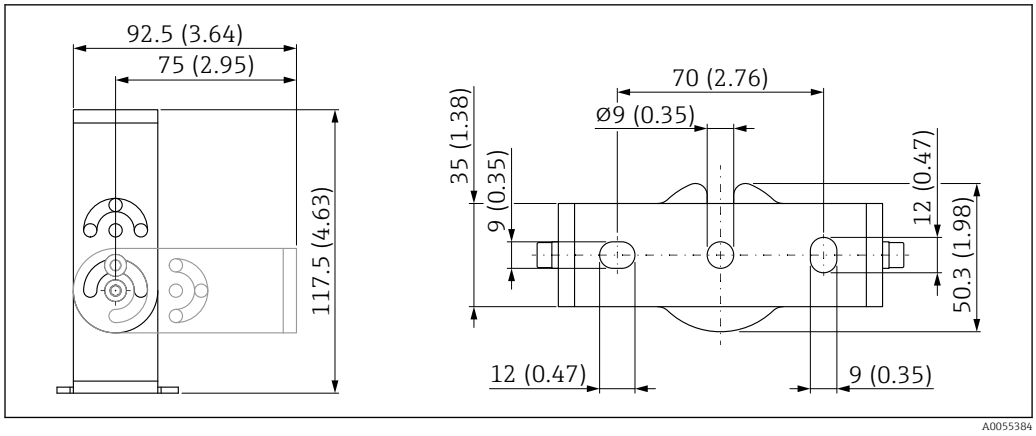

26 Dimensions of mounting bracket. Unit of measurement mm (in)

Consists of:
- 1 × mounting bracket, 316L (1.4404)
- 1 × angle bracket, 316L (1.4404)
- 3 × screws, A4
- 3 × securing disks, A4

Order number (G 1"/NPT 1")
71325079

Antenna end process connection G 1½"/NPT 1½"

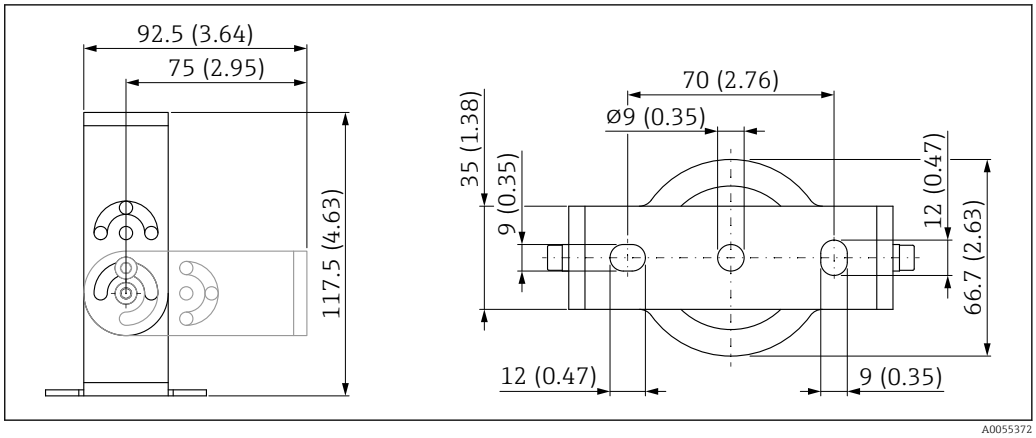

27 *Dimensions of mounting bracket. Unit of measurement mm (in)*

Consists of:
- 1 × mounting bracket, 316L (1.4404)
- 1 × angle bracket, 316L (1.4404)
- 3 × screws, A4
- 3 × securing disks, A4
- 1 × securing nut G 1½"

Order number (G 1½"/NPT 1½")
71662419

Mounting bracket, adjustable, wall, 200 mm

The mounting bracket can be used for mounting on a wall.

Two versions are available:
- Cable entry process connection G 1"/NPT 1"
- Antenna end process connection G 1½"/NPT 1½"

Cable entry process connection G 1"/NPT 1"

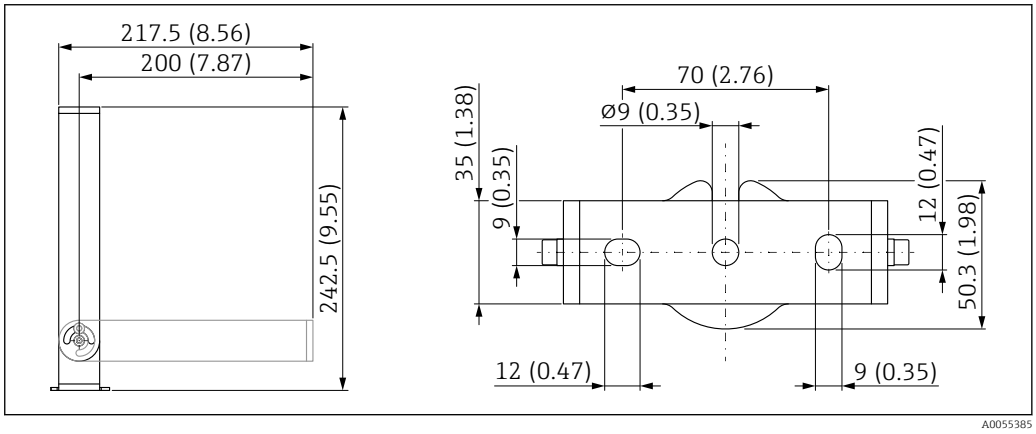

28 *Dimensions of mounting bracket. Unit of measurement mm (in)*

Consists of:
- 1 × mounting bracket, 316L (1.4404)
- 1 × angle bracket, 316L (1.4404)
- 3 × screws, A4
- 3 × securing disks, A4

Order number (G 1"/NPT 1")
71662421

Antenna end process connection G 1½"/NPT 1½"

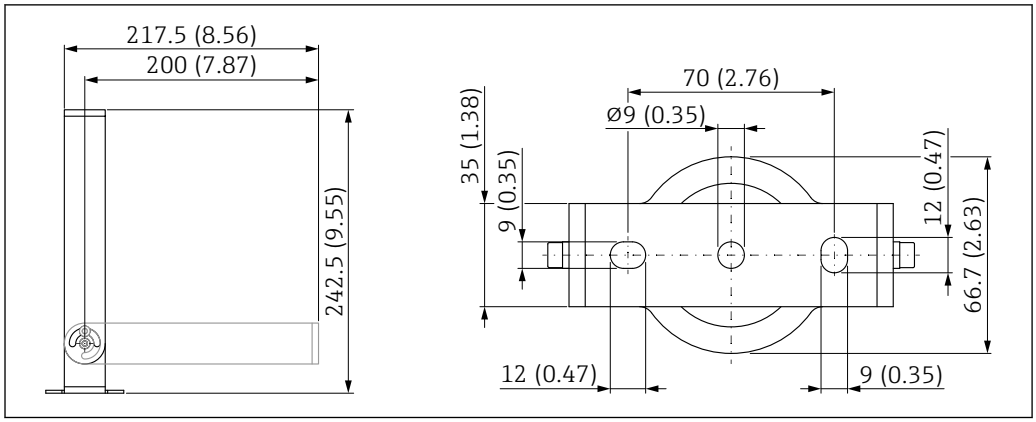

29 Dimensions of mounting bracket. Unit of measurement mm (in)

Consists of:
- 1 × mounting bracket, 316L (1.4404)
- 1 × angle bracket, 316L (1.4404)
- 3 × screws, A4
- 3 × securing disks, A4
- 1 × securing nut G 1½"

Order number (G 1½"/NPT 1½")
71662423

Angle bracket for wall mounting

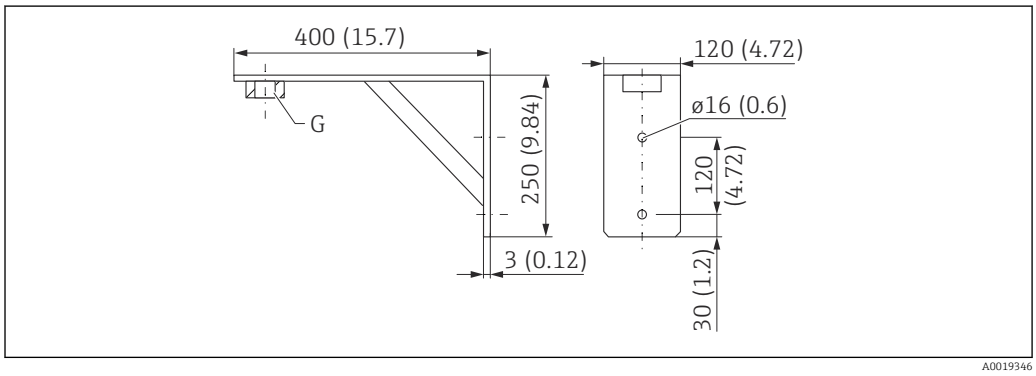

30 Dimensions of mounting bracket. Unit of measurement mm (in)

G Sensor connection in accordance with the product structure "Antenna end process connection"

Weight
3.4 kg (7.5 lb)

Material
316L (1.4404)

Order number for G 1½" process connection
71452324
Also suitable for MNPT 1½"

Order number for G 2" process connection
71452325
Also suitable for MNPT 2"

Cantilever, pivotable

Installation type sensor cable entry process connection

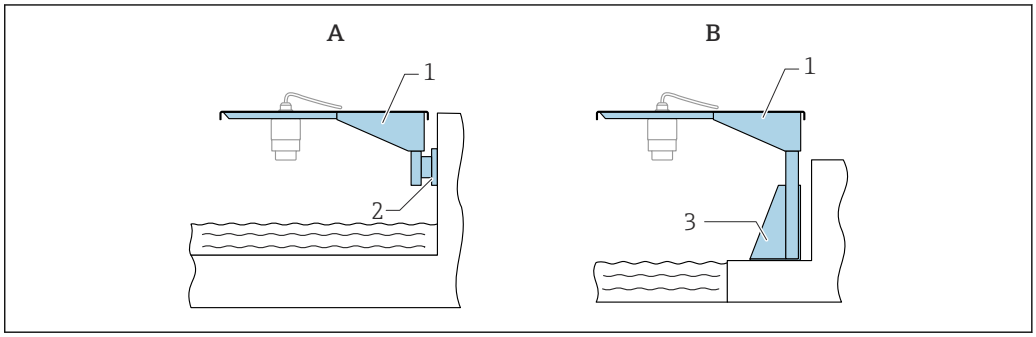

31 Installation type sensor cable entry process connection

A Installation with cantilever and wall bracket
B Installation with cantilever and mounting frame
1 Cantilever
2 Wall bracket
3 Mounting frame

500 mm cantilever with pivot, sensor cable entry process connection

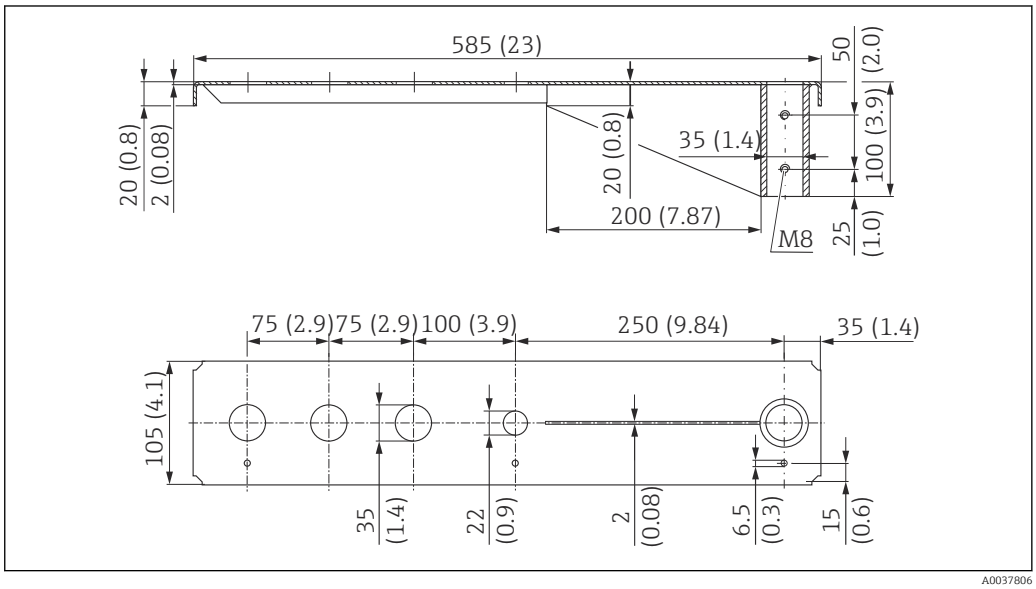

32 Dimensions of 500 mm cantilever with pivot, for sensor cable entry process connection. Unit of measurement mm (in)

Weight:
2.1 kg (4.63 lb)

Material
316L (1.4404)

Order number
71452315

- 35 mm (1.38 in) openings for all G 1" or MNPT 1" cable entry thread process connections
- 22 mm (0.87 in) opening can be used for any additional sensor
- Retaining screws are included in delivery

1 000 mm cantilever with pivot, sensor cable entry process connection

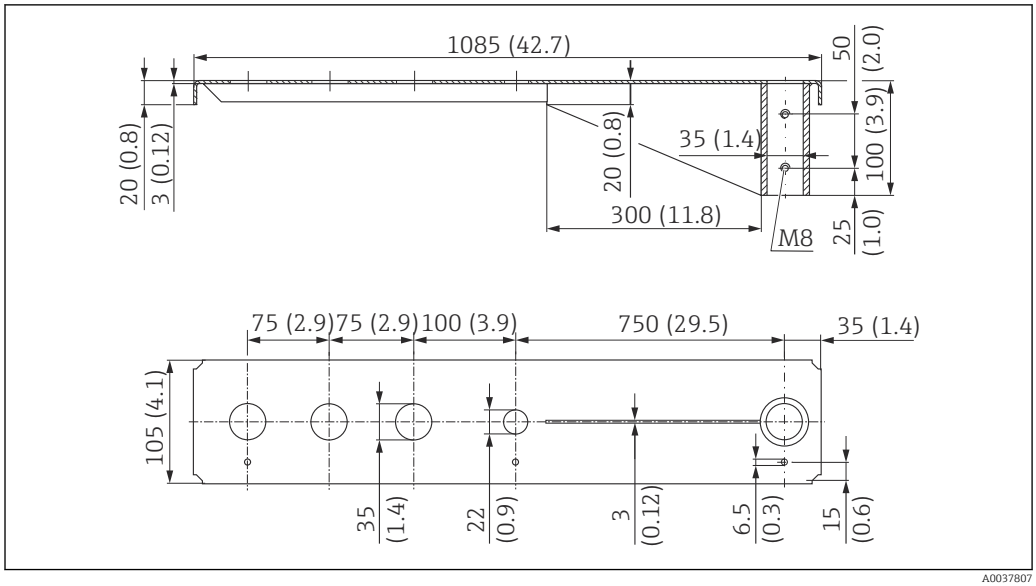

33 Dimensions of 1 000 mm cantilever with pivot, for sensor cable entry process connection. Unit of measurement mm (in)

Weight:
4.5 kg (9.92 lb)

Material
316L (1.4404)

Order number
71452316

- 35 mm (1.38 in) openings for all G 1" or MNPT 1" cable entry thread process connections
- 22 mm (0.87 in) opening can be used for any additional sensor
- Retaining screws are included in delivery

Installation type sensor antenna end process connection

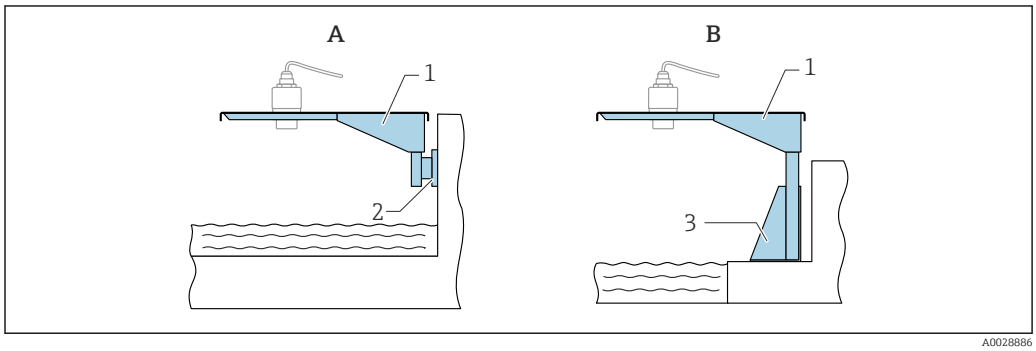

34 Installation type sensor antenna end process connection

A Installation with cantilever and wall bracket
B Installation with cantilever and mounting frame
1 Cantilever
2 Wall bracket
3 Mounting frame

500 mm cantilever with pivot, sensor antenna end process connection G 1½"

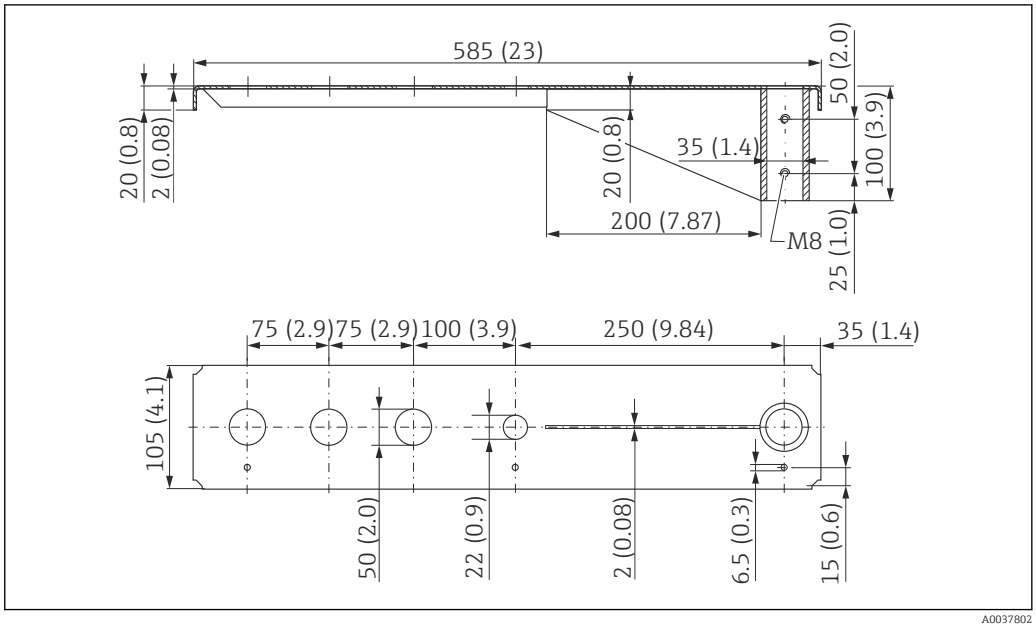

35 Dimensions of 500 mm cantilever with pivot, for sensor antenna end process connection G 1½". Unit of measurement mm (in)

Weight:
1.9 kg (4.19 lb)

Material
316L (1.4404)

Order number
71452318

- 50 mm (2.17 in) openings for all G 1½" or MNPT 1½" antenna end thread process connections
- 22 mm (0.87 in) opening can be used for any additional sensor
- Retaining screws are included in delivery

1 000 mm cantilever with pivot, sensor antenna end process connection G 1½"

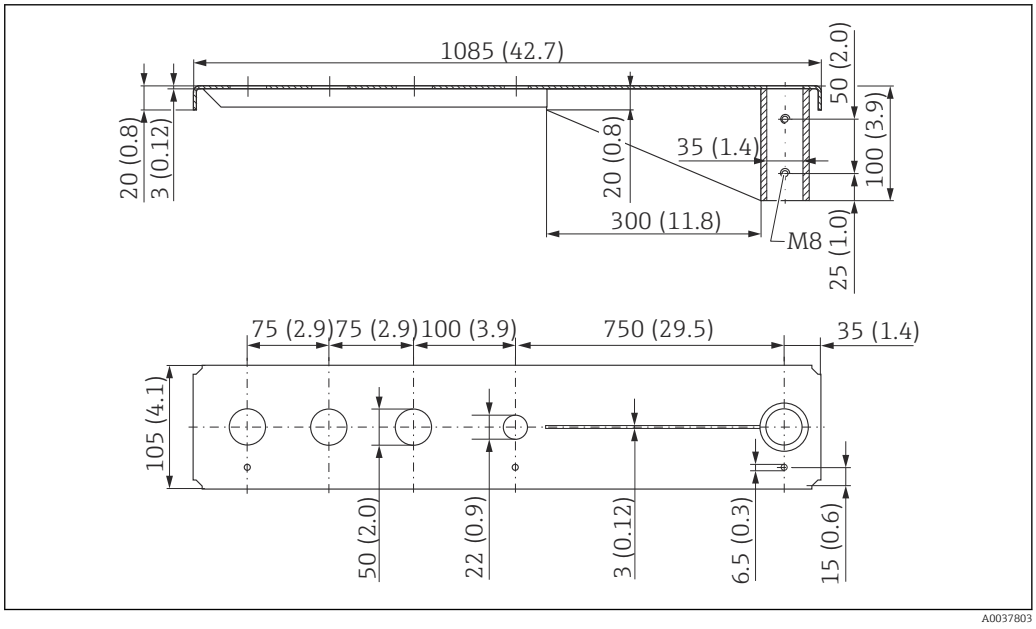

36 Dimensions of 1 000 mm cantilever with pivot, for sensor antenna end process connection G 1½". Unit of measurement mm (in)

Weight:
4.4 kg (9.7 lb)

Material
316L (1.4404)

Order code
71452319

- 50 mm (2.17 in) openings for all G 1½" or MNPT 1½" antenna end thread process connections
- 22 mm (0.87 in) opening can be used for any additional sensor
- Retaining screws are included in delivery

Mounting stand, 700 mm (27.6 in) for cantilever with pivot

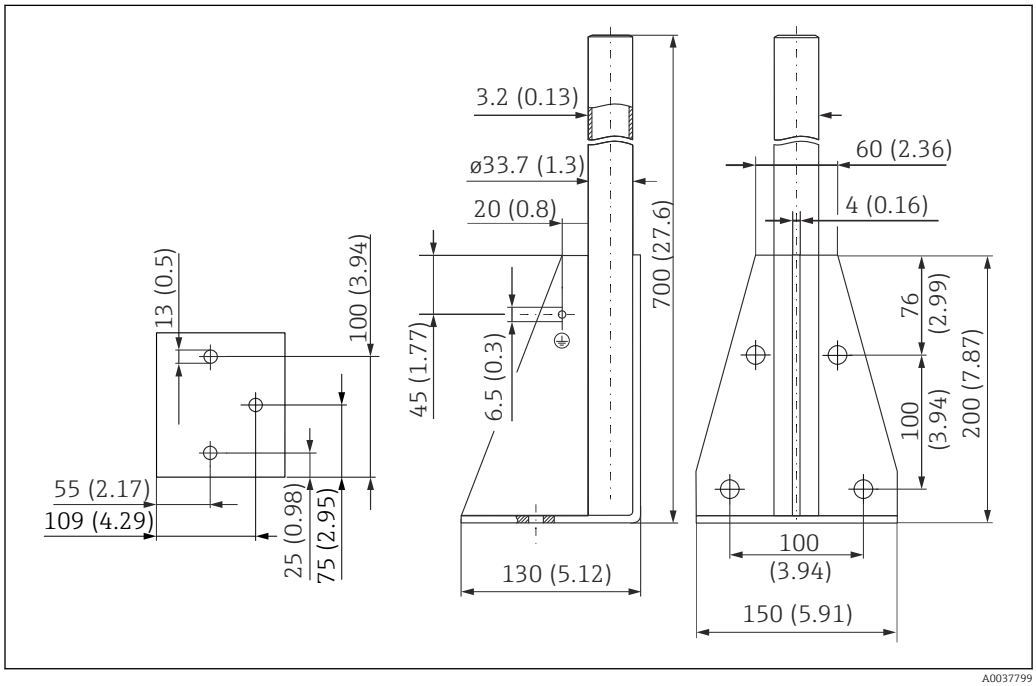

37 Dimensions. Unit of measurement mm (in)

Weight:
4.2 kg (9.26 lb)

Material
316L (1.4404)

Order number
71452327

Mounting stand, 1400 mm (55.1 in) for cantilever with pivot

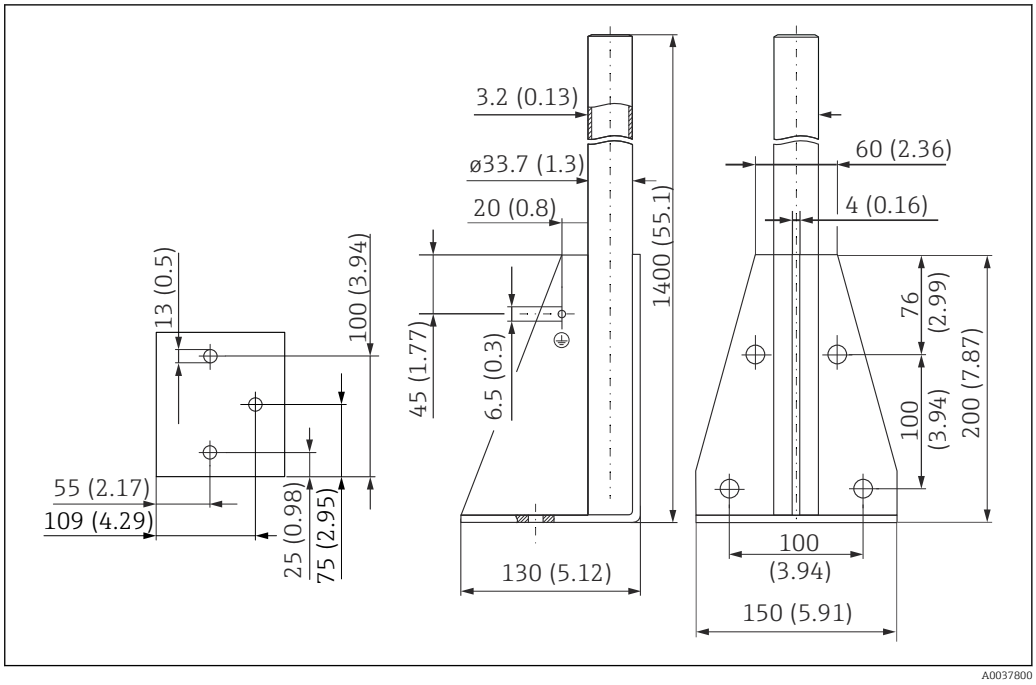

38 Dimensions. Unit of measurement mm (in)

Weight:
6 kg (13.23 lb)

Material
316L (1.4404)

Order number
71452326

Wall bracket for cantilever with pivot

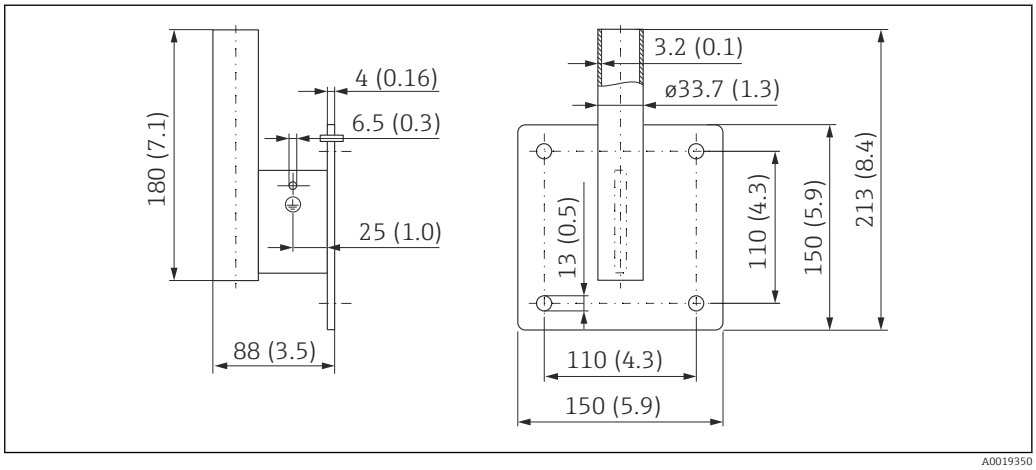

39 Dimensions of the wall bracket. Unit of measurement mm (in)

Weight
1.2 kg (2.65 lb)

Material
316L (1.4404)

Order number
71452323

Pivotable mounting bracket

The pivotable mounting bracket is used, for example, to install the device in a manhole over a sewer channel.

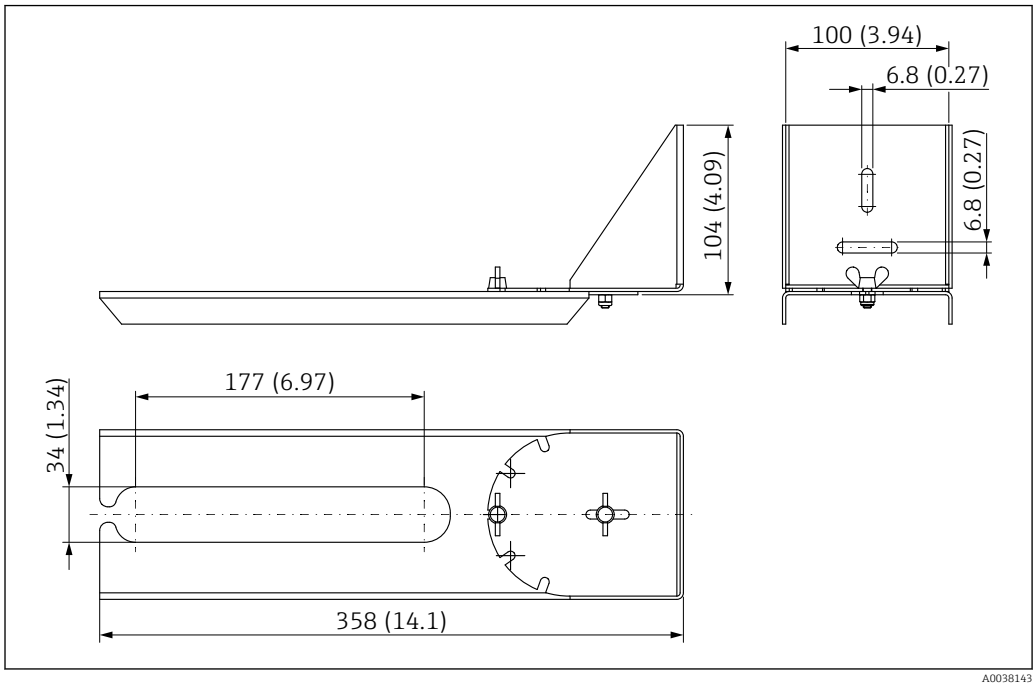

40 Dimensions of pivotable mounting bracket. Unit of measurement mm (in)

34 mm (1.34 in) openings for all G 1" or MNPT 1" cable entry thread process connections

Material
316L (1.4404)

Order code
71429910

FAU40 alignment unit

The alignment unit is used to optimally align the sensor with the bulk solids.

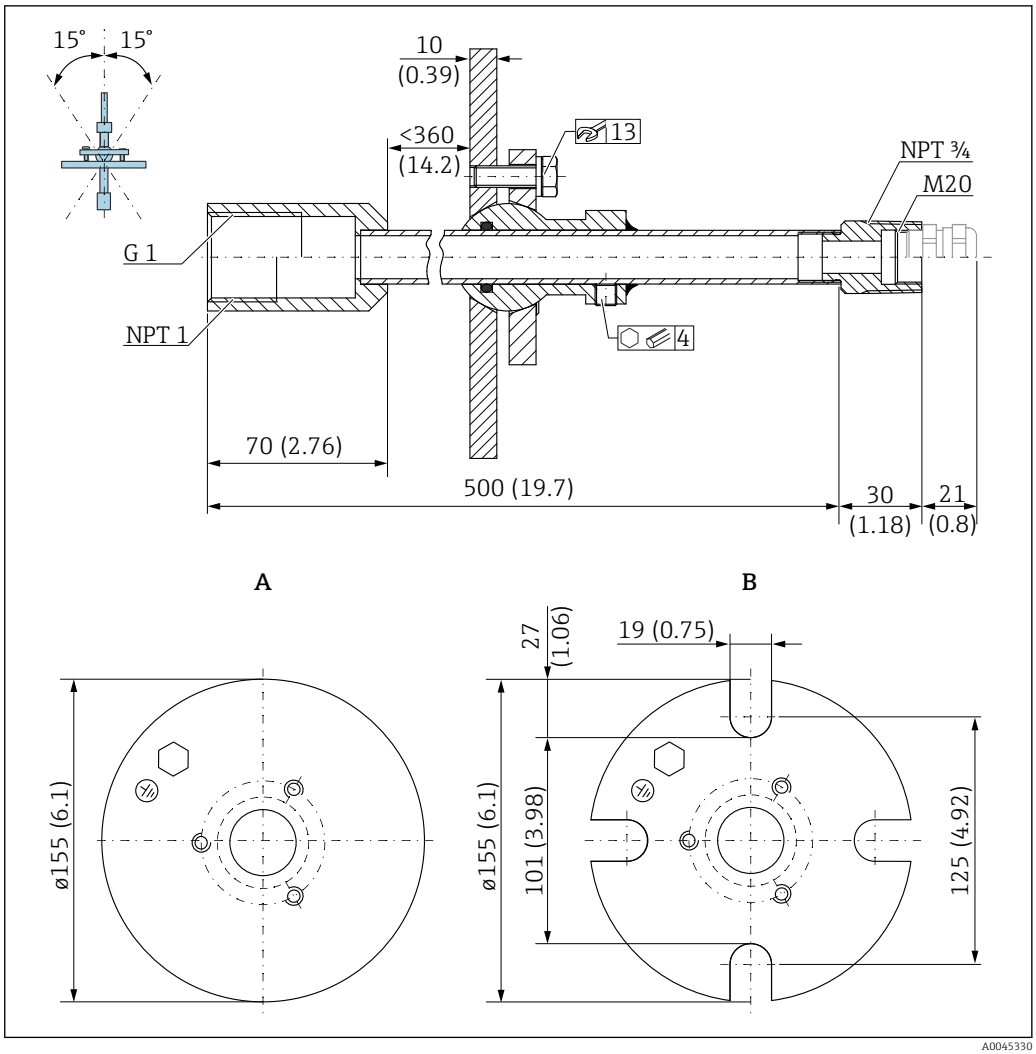

41 Dimensions. Unit of measurement mm (in)

A Welding flange
B UNI flange

Material
- Flange: 304
- Pipe: Steel, galvanized
- Cable gland: 304 or steel, galvanized

Order number
FAU40-##

For use in all G 1" or MNPT 1" cable entry thread process connections and connection cables max. dia. 10 mm (0.43 in), min. length 600 mm (23.6 in).

Technical Information TI00179F

UNI flange 2"/DN50/50, PP

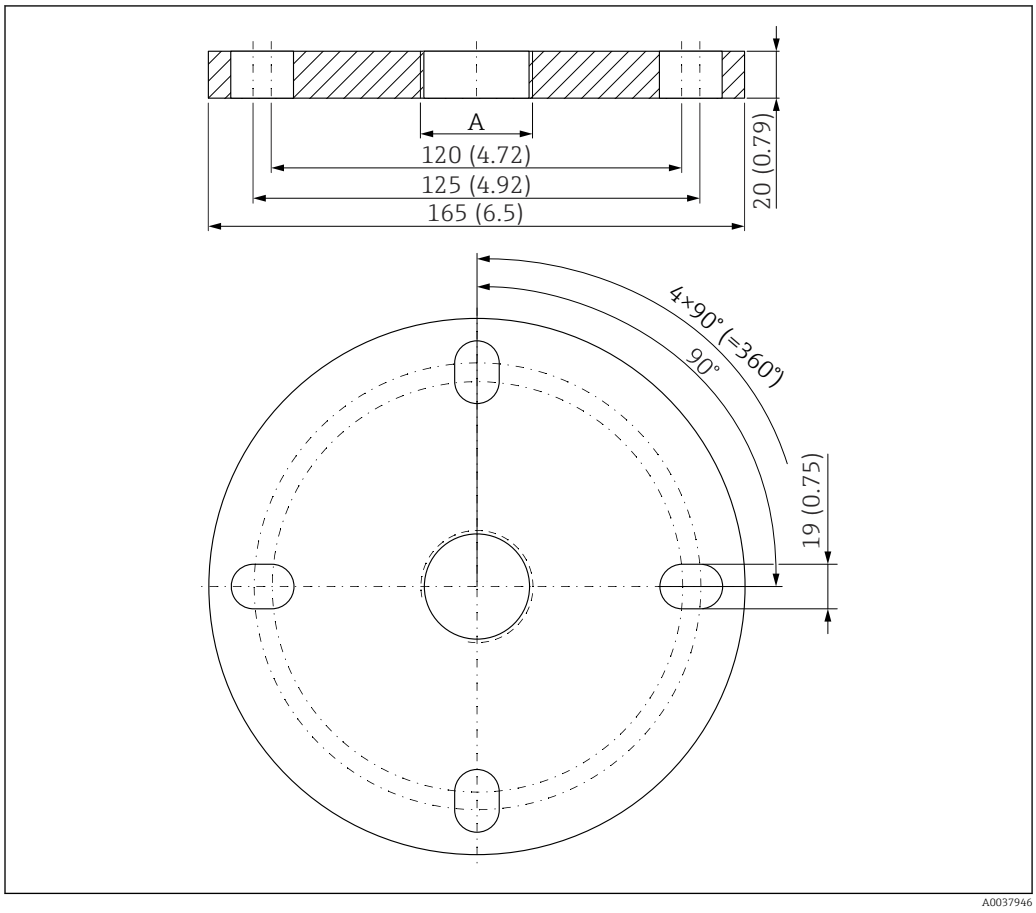

42 Dimensions of UNI flange 2"/DN50/50. Unit of measurement mm (in)

A Sensor connection in accordance with the product structure "Antenna end process connection"

Material
PP

Order code
FAX50-####

UNI flange 3"/DN80/80, PP

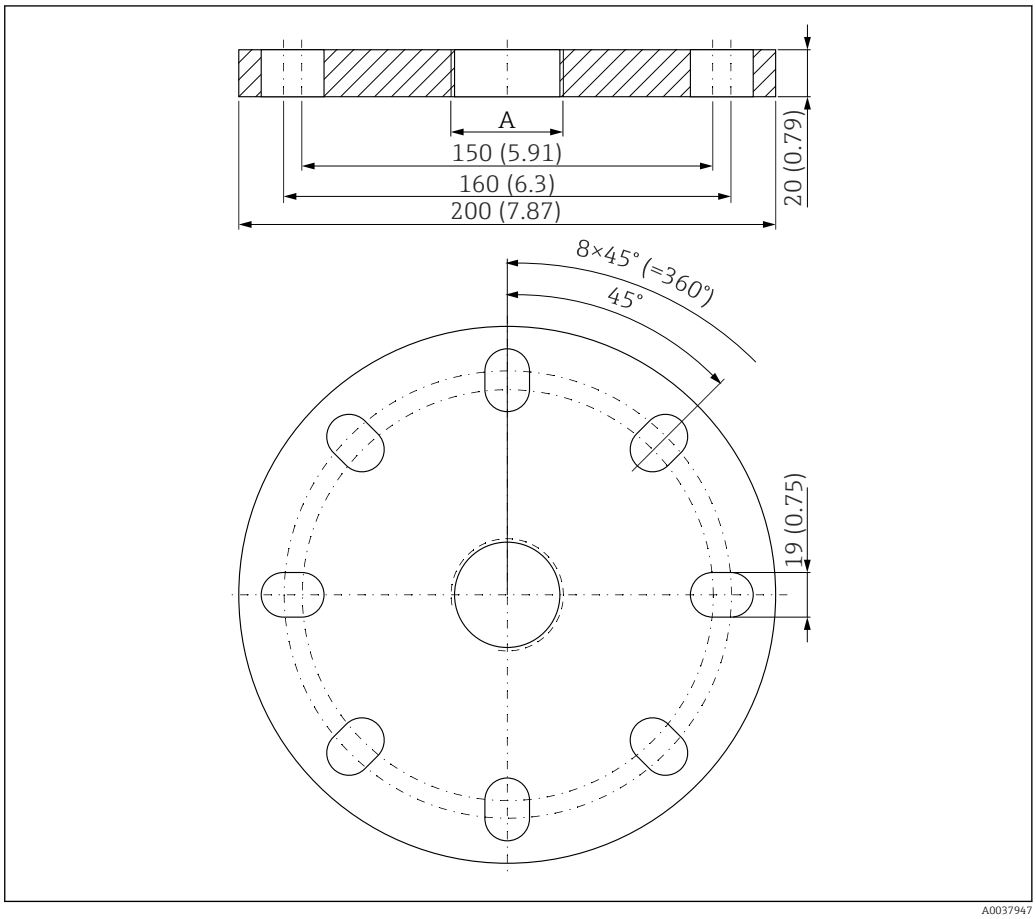

43 Dimensions of UNI flange 3"/DN80/80. Unit of measurement mm (in)

A Sensor connection in accordance with the product structure "Antenna end process connection" or "Cable entry process connection"

Material
PP

Order code
FAX50-####

UNI flange 4"/DN100/100, PP

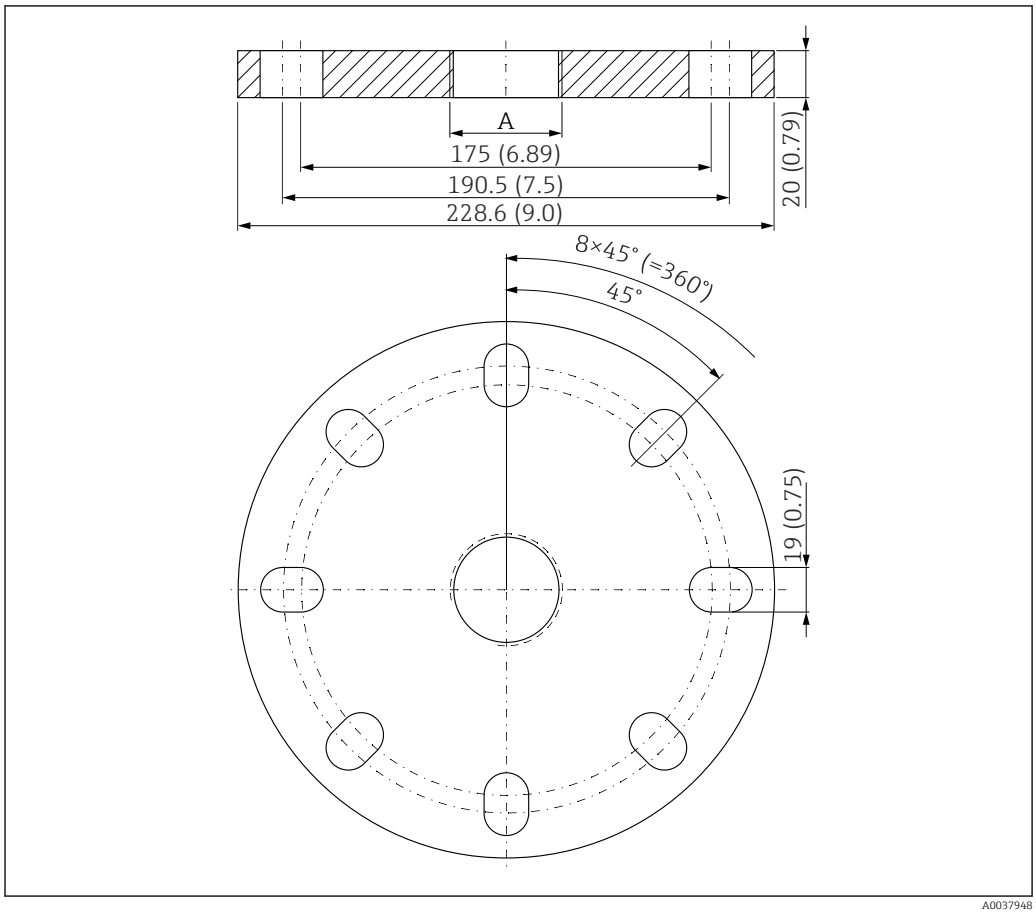

44 *Dimensions of UNI flange 4"/DN100/100. Unit of measurement mm (in)*

A Sensor connection in accordance with the product structure "Antenna end process connection" or "Cable entry process connection"

Material
PP

Order code
FAX50-####

Adjustable flange seal

The adjustable flange seal is used to align the sensor.

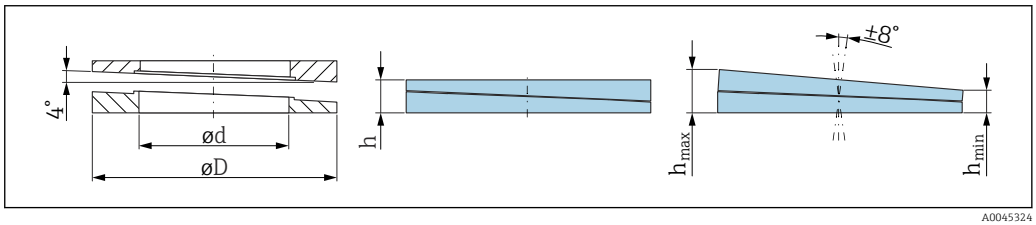

45 *Dimensions*

Technical data: version DN/JIS			
Order code	71074263	71074264	71074265
Compatible with	DN80 PN10/40	DN100 PN10/16	▪ DN150 PN10/16 ▪ JIS 10K 150A
Recommended screw length	100 mm (3.9 in)	100 mm (3.9 in)	110 mm (4.3 in)
Recommended screw size	M14	M14	M18
Material	EPDM		
Process pressure	−0.1 to 0.1 bar (−1.45 to 1.45 psi)		
Process temperature	−40 to +80 °C (−40 to +176 °F)		
D	142 mm (5.59 in)	162 mm (6.38 in)	218 mm (8.58 in)
d	89 mm (3.5 in)	115 mm (4.53 in)	169 mm (6.65 in)
h	22 mm (0.87 in)	23.5 mm (0.93 in)	26.5 mm (1.04 in)
h_{min}	14 mm (0.55 in)	14 mm (0.55 in)	14 mm (0.55 in)
h_{max}	30 mm (1.18 in)	33 mm (1.3 in)	39 mm (1.45 in)
Technical data: Version ASME/JIS			
Order code	71249070	71249072	71249073
Compatible with	▪ ASME 3" 150 lbs ▪ JIS 80A 10K	ASME 4" 150 lbs	ASME 6" 150 lbs
Recommended screw length	100 mm (3.9 in)	100 mm (3.9 in)	110 mm (4.3 in)
Recommended screw size	M14	M14	M18
Material	EPDM		
Process pressure	−0.1 to 0.1 bar (−1.45 to 1.45 psi)		
Process temperature	−40 to +80 °C (−40 to +176 °F)		
D	133 mm (5.2 in)	171 mm (6.7 in)	219 mm (8.6 in)
d	89 mm (3.5 in)	115 mm (4.53 in)	168 mm (6.6 in)
h	22 mm (0.87 in)	23.5 mm (0.93 in)	26.5 mm (1.04 in)
h_{min}	14 mm (0.55 in)	14 mm (0.55 in)	14 mm (0.55 in)
h_{max}	30 mm (1.18 in)	33 mm (1.3 in)	39 mm (1.45 in)

DeviceCare SFE100

Configuration tool for IO-Link, HART, PROFIBUS and FOUNDATION Fieldbusfield devices
DeviceCare is available for download free of charge at www.software-products.endress.com. You need to register in the Endress+Hauser software portal to download the application.

Technical Information TI01134S

Device Viewer

All the spare parts for the device, along with the order code, are listed in the *Device Viewer* (www.endress.com/deviceviewer).

RN22	Single or two-channel active barrier for safe electrical isolation of 4 to 20 mA standard signal circuits, HART transparent Technical Information TI01515K and Operating Instructions BA02004K
RN42	Single-channel active barrier with wide-range power supply for safe electrical isolation of 4 to 20 mA standard signal circuits, HART transparent. Technical Information TI01584K and Operating Instructions BA02090K
Field Xpert SMT70	Universal, high-performance tablet PC for device configuration in Ex Zone 2 and non-Ex areas For details, see "Technical Information" TI01342S
Field Xpert SMT77	Universal, high-performance tablet PC for device configuration in Ex Zone 1 areas For details, see "Technical Information" TI01418S
SmartBlue app	Mobile app for easy configuration of devices on site via Bluetooth wireless technology

Documentation

For an overview of the scope of the associated Technical Documentation, refer to the following:
- *Device Viewer* (www.endress.com/deviceviewer): Enter the serial number from the nameplate
- *Endress+Hauser Operations app*: Enter serial number from nameplate or scan matrix code on nameplate.

Standard documentation	**Document type: Operating Instructions (BA)** Installation and initial commissioning – contains all the functions in the operating menu that are needed for a routine measuring task. Functions beyond this scope are not included. **Document type: Description of Device Parameters (GP)** The document is part of the Operating Instructions and serves as a reference for parameters, providing a detailed explanation of each individual parameter of the operating menu. **Document type: Brief Operating Instructions (KA)** Quick guide to the first measured value – includes all essential information from incoming acceptance to electrical connection. **Document type: Safety Instructions, certificates** Depending on the approval, safety instructions are supplied with the device, e.g. XA. This documentation is an integral part of the Operating Instructions. Information on the Safety Instructions (XA) that are relevant for the device is provided on the nameplate.
Supplementary device-dependent documentation	Additional documents are supplied depending on the device version ordered: Always comply strictly with the instructions in the supplementary documentation. The supplementary documentation is an integral part of the device documentation.

Registered trademarks

Apple®
Apple, the Apple logo, iPhone, and iPod touch are trademarks of Apple Inc., registered in the U.S. and other countries. App Store is a service mark of Apple Inc.

Android®
Android, Google Play and the Google Play logo are trademarks of Google Inc.

Bluetooth®

The *Bluetooth®* word mark and logos are registered trademarks owned by the Bluetooth SIG, Inc. and any use of such marks by Endress+Hauser is under license. Other trademarks and trade names are those of their respective owners.

71687476

www.addresses.endress.com

Endress+Hauser

People for Process Automation