BA02373F/00/EN/01.24-00
71670078
2024-09-01

Operating Instructions
Micropilot FMR30B

Free-space radar
HART

Endress+Hauser
People for Process Automation

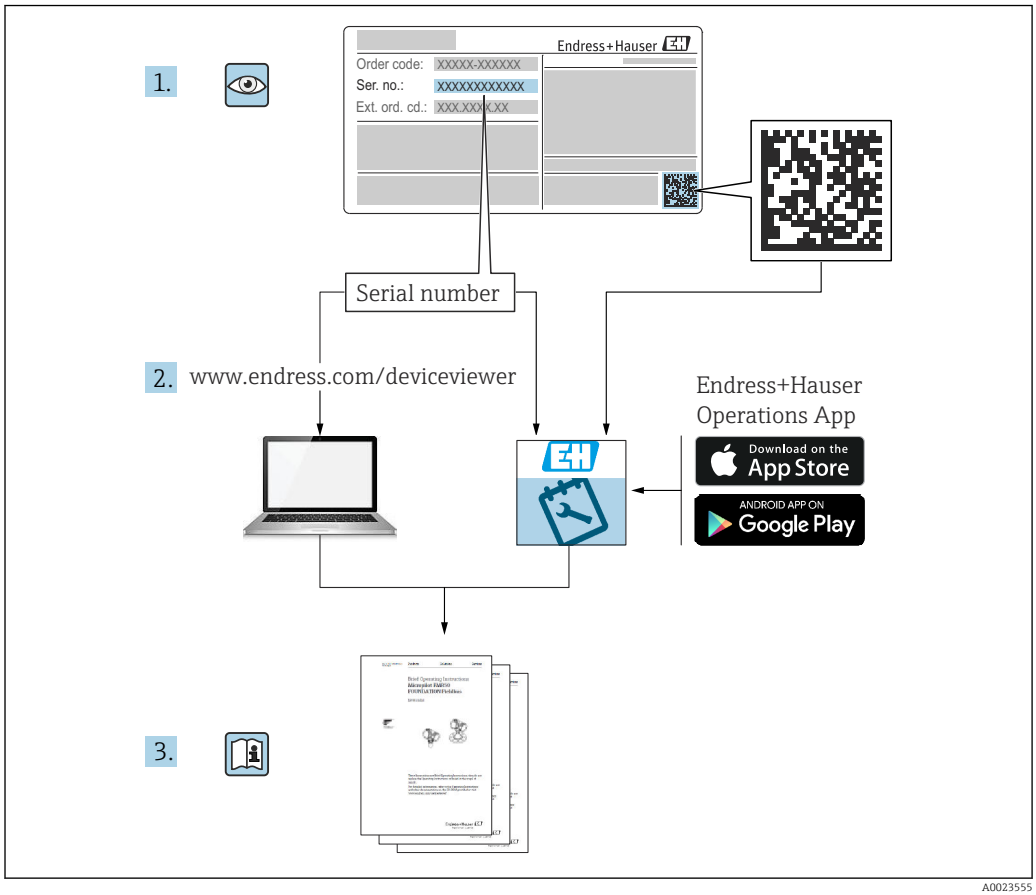

- Make sure the document is stored in a safe place such that it is always available when working on or with the device
- Avoid danger to individuals or the facility: read the "Basic safety instructions" section carefully, as well as all other safety instructions in the document that are specific to working procedures

The manufacturer reserves the right to modify technical data without prior notice. The Endress+Hauser sales organization will supply you with current information and updates to these instructions.

Table of contents

1 About this document 5
1.1 Document function 5
1.2 Symbols 5
1.3 List of abbreviations 6
1.4 Documentation 6
1.5 Registered trademarks 7

2 Basic safety instructions 7
2.1 Requirements for the personnel 7
2.2 Intended use 7
2.3 Workplace safety 8
2.4 Operational safety 8
2.5 Product security 8
2.6 IT security 9
2.7 Device-specific IT security 9

3 Product description 10
3.1 Product design 10

4 Incoming acceptance and product identification 10
4.1 Incoming acceptance 10
4.2 Product identification 11
4.3 Storage and transport 11

5 Mounting 11
5.1 General instructions 11
5.2 Mounting instructions 12
5.3 Mounting location 12
5.4 Internal vessel fittings 13
5.5 Vertical alignment of antenna axis 13
5.6 Optimization options 13
5.7 Mounting the device 14
5.8 Post-mounting check 16

6 Electrical connection 16
6.1 Connecting the device 16
6.2 Ensuring the degree of protection 20
6.3 Post-connection check 21

7 Operation options 21
7.1 Overview of operation options 21
7.2 Structure and function of the operating menu 21
7.3 Access to operating menu via onsite display . . 22
7.4 Onsite display, locking or unlocking procedure 24
7.5 Operation via Bluetooth® wireless technology (optional) 24
7.6 Access to the operating menu via the operating tool 24

8 System integration 26
8.1 Overview of device description files 26
8.2 Measured variables via HART protocol 26

9 Commissioning 26
9.1 Preliminaries 26
9.2 Installation and function check 27
9.3 Overview of commissioning options 27
9.4 Commissioning via onsite display 27
9.5 Commissioning via SmartBlue app 27
9.6 Commissioning via FieldCare/DeviceCare 28
9.7 Commissioning via additional operating tools (AMS, PDM, etc.) 29
9.8 Notes on the "Commissioning" wizard 29
9.9 Configuring the device address via software . . 29
9.10 Configuring the operating language 30
9.11 Configuring the device 30
9.12 Protecting settings from unauthorized access 34

10 Operation 34
10.1 Reading the device locking status 34
10.2 Reading off measured values 35
10.3 Adapting the device to process conditions 35
10.4 Heartbeat Technology (optional) 35
10.5 Proof test for WHG devices (optional) 35

11 Diagnostics and troubleshooting . . . 36
11.1 General troubleshooting 36
11.2 Diagnostic information on local display 38
11.3 Diagnostic event in the operating tool 39
11.4 Adapting the diagnostic information 39
11.5 Pending diagnostic messages 39
11.6 Diagnostic list 39
11.7 Event logbook 42
11.8 Resetting the device 43
11.9 Device information 43
11.10 Firmware history 44

12 Maintenance 45
12.1 Exterior cleaning 45
12.2 Seals 45

13 Repair 45
13.1 General information 45
13.2 Spare parts 45
13.3 Return 46
13.4 Disposal 46

14 Accessories 46
14.1 Weather protective cover 46

14.2 Securing nut G 1½" 47
14.3 Securing nut G 2" 47
14.4 Uni adapter G 1½">G 2" 48
14.5 Uni adapter MNPT 1½" > MNPT 2" 48
14.6 Mounting bracket, adjustable, wall, 75 mm . . . 48
14.7 Mounting bracket, adjustable, wall, 200 mm . . 49
14.8 Angle bracket for wall mounting 50
14.9 Cantilever, pivotable 50
14.10 UNI slip-on flange 3"/DN80/80, PP 55
14.11 UNI slip-on flange 4"/DN100/100, PP 56
14.12 UNI slip-on flange 6"/DN150/150, PP 57
14.13 UNI flange 2"/DN50/50, PP 58
14.14 UNI flange 3"/DN80/80, PP 58
14.15 UNI flange 4"/DN100/100, PP 59
14.16 Adjustable flange seal 61
14.17 RIA15 in the field housing 62
14.18 HART communication resistor 62
14.19 DeviceCare SFE100 63
14.20 FieldCare SFE500 63
14.21 Device Viewer 63
14.22 Commubox FXA195 HART 63
14.23 RN22 64
14.24 RN42 64
14.25 Field Xpert SMT70 64
14.26 Field Xpert SMT77 64
14.27 SmartBlue app 64
14.28 RMA42 64

15 Technical data 65

15.1 Input 65
15.2 Output 69
15.3 Environment 72
15.4 Process 74
15.5 Additional technical data 75

Index 76

1 About this document

1.1 Document function

These Operating Instructions contain all the information required in the various life cycle phases of the device: from product identification, incoming acceptance and storage, to installation, connection, operation and commissioning, through to troubleshooting, maintenance and disposal.

1.2 Symbols

1.2.1 Safety symbols

DANGER
This symbol alerts you to a dangerous situation. Failure to avoid this situation will result in serious or fatal injury.

WARNING
This symbol alerts you to a dangerous situation. Failure to avoid this situation can result in serious or fatal injury.

CAUTION
This symbol alerts you to a dangerous situation. Failure to avoid this situation can result in minor or medium injury.

NOTICE
This symbol contains information on procedures and other facts which do not result in personal injury.

1.2.2 Communication-specific symbols

Bluetooth®:
Wireless data transmission between devices over a short distance.

1.2.3 Symbols for certain types of Information

Permitted:

Procedures, processes or actions that are permitted.

Forbidden:

Procedures, processes or actions that are forbidden.

Additional information:

Reference to documentation:

Reference to page:

Series of steps: 1., 2., 3.

Result of an individual step:

1.2.4 Symbols in graphics

Item numbers: 1, 2, 3 ...

Series of steps: 1., 2., 3.

Views: A, B, C, ...

1.3 List of abbreviations

PN
Nominal pressure

MWP
Maximum working pressure
The MWP is indicated on the nameplate.

ToF
Time of Flight

DTM
Device Type Manager

ε_r (Dk value)
Relative dielectric constant

Operating tool

The term "operating tool" is used in place of the following operating software:
- FieldCare / DeviceCare, for operation via HART communication and PC
- SmartBlue app for operation using an Android or iOS smartphone or tablet

PLC
Programmable logic controller (PLC)

1.4 Documentation

For an overview of the scope of the associated Technical Documentation, refer to the following:
- *Device Viewer* (www.endress.com/deviceviewer): Enter the serial number from the nameplate
- *Endress+Hauser Operations app*: Enter serial number from nameplate or scan matrix code on nameplate.

1.5 Registered trademarks

Apple®
Apple, the Apple logo, iPhone, and iPod touch are trademarks of Apple Inc., registered in the U.S. and other countries. App Store is a service mark of Apple Inc.

Android®
Android, Google Play and the Google Play logo are trademarks of Google Inc.

Bluetooth®
The *Bluetooth®* word mark and logos are registered trademarks owned by the Bluetooth SIG, Inc. and any use of such marks by Endress+Hauser is under license. Other trademarks and trade names are those of their respective owners.

HART®
Registered trademark of the FieldComm Group, Austin, Texas USA

2 Basic safety instructions

2.1 Requirements for the personnel

The personnel for installation, commissioning, diagnostics and maintenance must fulfill the following requirements:
- Trained, qualified specialists must have a relevant qualification for this specific function and task.
- Are authorized by the plant owner/operator.
- Are familiar with federal/national regulations.
- Before starting work, read and understand the instructions in the manual and supplementary documentation as well as the certificates (depending on the application).
- Follow instructions and comply with basic conditions.

The operating personnel must fulfill the following requirements:
- Are instructed and authorized according to the requirements of the task by the facility's owner-operator.
- Follow the instructions in this manual.

2.2 Intended use

Application and media
The measuring instrument described in these Operating Instructions is intended for continuous, non-contact level measurement in liquids, pastes, sludges and bulk solids. Due to its operating frequency of approx. 80 GHz, a maximum radiated peak power of <1.5 mW and an average output power of <70 µW, unrestricted use outside of closed, metallic vessels is also permitted (for example over basins or open channels). Operation is completely harmless to humans and animals.

If the limit values specified in the "Technical data" and the conditions listed in the instructions and additional documentation are observed, the measuring instrument may be used only for the following measurements:
- Measured process variables: level, distance, signal strength
- Calculated process variables: volume or mass in vessels of any shape; flow rate through measuring weirs or channels (calculated based on the level using the linearization functionality)

To ensure that the measuring instrument remains in proper condition for the operation time:
- Use the measuring instrument only for media to which the process-wetted materials are sufficiently resistant.

- Observe the limit values in the "Technical data".

Incorrect use
The manufacturer is not liable for damage caused by improper or non-intended use.

Avoid mechanical damage:
- Do not touch or clean device surfaces with pointed or hard objects.

Clarification of borderline cases:
- For special fluids and fluids for cleaning, Endress+Hauser is glad to provide assistance in verifying the corrosion resistance of fluid-wetted materials, but does not accept any warranty or liability.

Residual risks
Due to heat transfer from the process as well as power loss in the electronics, the temperature of the electronics housing and the assemblies it contains (e.g. display module, main electronics module and I/O electronics module) may rise to 80 °C (176 °F). When in operation, the sensor can reach a temperature close to the medium temperature.

Danger of burns from contact with surfaces!
- In the event of elevated fluid temperatures, ensure protection against contact to prevent burns.

2.3 Workplace safety

When working on and with the device:
- Wear the required personal protective equipment as per national regulations.
- Switch off the supply voltage before connecting the device.

2.4 Operational safety

Risk of injury!
- Operate the device only if it is in proper technical condition, free from errors and faults.
- The operator is responsible for ensuring that the device is in good working order.

Modifications to the device

Unauthorized modifications to the device are not permitted and can lead to unforeseeable dangers:
- If modifications are nevertheless required, consult with the manufacturer.

Repair

To ensure continued operational safety and reliability:
- Only use original accessories.

Hazardous area

To eliminate the risk of danger to persons or the facility when the device is used in the approval-related area (e.g. explosion protection, pressure equipment safety):
- Check the nameplate to verify if the device ordered can be put to its intended use in the hazardous area.
- Observe the specifications in the separate supplementary documentation included as an integral part of these instructions.

2.5 Product security

This state-of-the-art device is designed and tested in accordance with good engineering practice to meet operational safety standards. It left the factory in a condition in which it is safe to operate.

The device fulfills general safety requirements and legal requirements. It also complies with the EU directives listed in the device-specific EU declaration of conformity. Endress+Hauser confirms this fact by affixing the CE mark to the device.

2.6 IT security

Our warranty is valid only if the product is installed and used as described in the Operating Instructions. The product is equipped with security mechanisms to protect it against any inadvertent changes to the settings.

IT security measures, which provide additional protection for the product and associated data transfer, must be implemented by the operators themselves in line with their security standards.

2.7 Device-specific IT security

The device offers specific functions to support protective measures by the operator. These functions can be configured by the user and guarantee greater in-operation safety if used correctly. The user role can be changed with an access code (applies to operation via the onsite display, Bluetooth or FieldCare, DeviceCare, asset management tools e.g. AMS, PDM).

2.7.1 Access via Bluetooth® wireless technology

Secure signal transmission via Bluetooth® wireless technology uses an encryption method tested by the Fraunhofer Institute.

- Without the SmartBlue app, the device is not visible via Bluetooth® wireless technology.
- Only one point-to-point connection is established between the device and a smartphone or tablet.
- The Bluetooth® wireless technology interface can be disabled via local operation or via SmartBlue/FieldCare/DeviceCare.

3 Product description

3.1 Product design

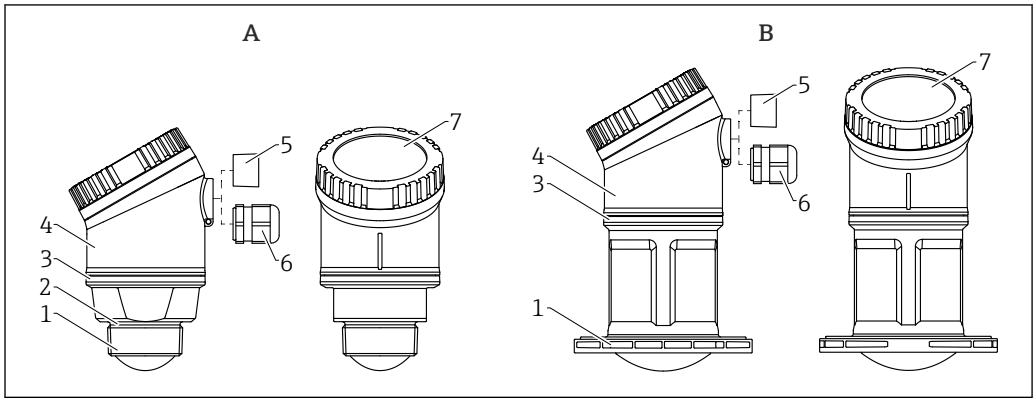

1 *Device design*

A 40 mm (1.5 in) antenna
B 80 mm (3 in) antenna
1 Antenna end process connection; PVDF
2 EPDM seal (for G 1½" thread)
3 PBT/PC design ring
4 Sensor housing; PBT/PC
5 Process connection, cable entry, NPT ½" thread
6 Process connection, cable entry, M20 gland; PA
7 Display top section; PBT/PC

4 Incoming acceptance and product identification

4.1 Incoming acceptance

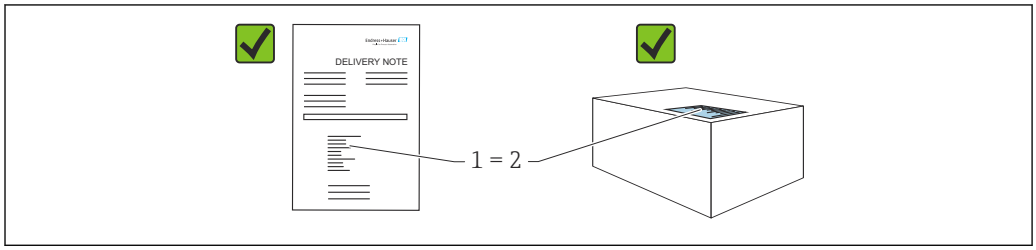

Check the following during incoming acceptance:
- Is the order code on the delivery note (1) identical to the order code on the product sticker (2)?
- Are the goods undamaged?
- Do the data on the nameplate correspond to the order specifications and the delivery note?
- Is the documentation provided?
- If required (see nameplate): are the Safety Instructions (XA) provided?

If one of these conditions is not met, please contact the manufacturer's sales office.

4.2 Product identification

The following options are available for identification of the device:
- Nameplate specifications
- Order code with breakdown of the device features on the delivery note
- Enter the serial numbers from the nameplates in *Device Viewer* (www.endress.com/deviceviewer): all the information about the device is displayed.

4.2.1 Nameplate

The information that is required by law and is relevant to the device is shown on the nameplate, e.g.:
- Manufacturer identification
- Order number, extended order code, serial number
- Technical data, degree of protection
- Firmware version, hardware version
- Approval-related information, reference to Safety Instructions (XA)
- DataMatrix code (information about the device)

Compare the data on the nameplate with your order.

4.2.2 Manufacturer address

Endress+Hauser SE+Co. KG
Hauptstraße 1
79689 Maulburg, Germany

Place of manufacture: See nameplate.

4.3 Storage and transport

4.3.1 Storage conditions

- Use the original packaging
- Store the device in clean and dry conditions and protect from damage caused by shocks

Storage temperature

−40 to +80 °C (−40 to +176 °F)

4.3.2 Transporting the product to the measuring point

⚠ WARNING

Incorrect transport!
The housing or sensor can be damaged or pull off. Risk of injury!
- ▶ Transport the device to the measuring point in its original packaging or by the process connection.

5 Mounting

5.1 General instructions

⚠ WARNING

Loss of protection rating if the device is opened in a wet environment.
- ▶ Only open the device in a dry environment!

1. Install the device or turn the housing so that the cable entries do not point upwards.

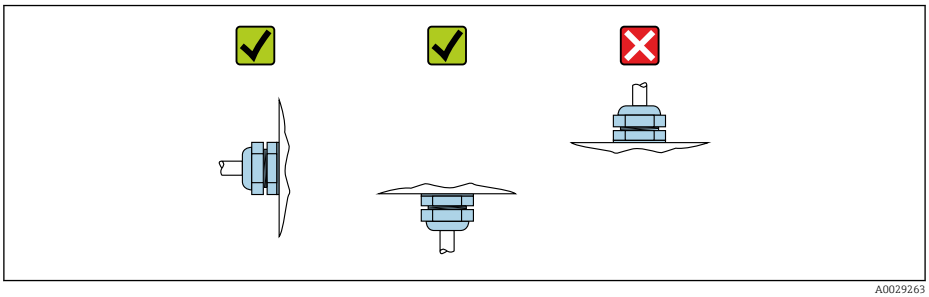

A0029263

2. Always firmly tighten the housing cover and the cable entries.
3. Counter-tighten the cable entries.
4. A drip loop must be provided when laying the cables.

5.2 Mounting instructions

During installation, it is important to ensure that the sealing element used has a permanent operating temperature that corresponds to the maximum temperature of the process.

- Devices are suitable for use in wet environments in accordance with IEC/EN 61010-1
- The onsite display can be adapted to the light conditions (for color scheme, see operating menu)
- Protect the housing against impact

5.3 Mounting location

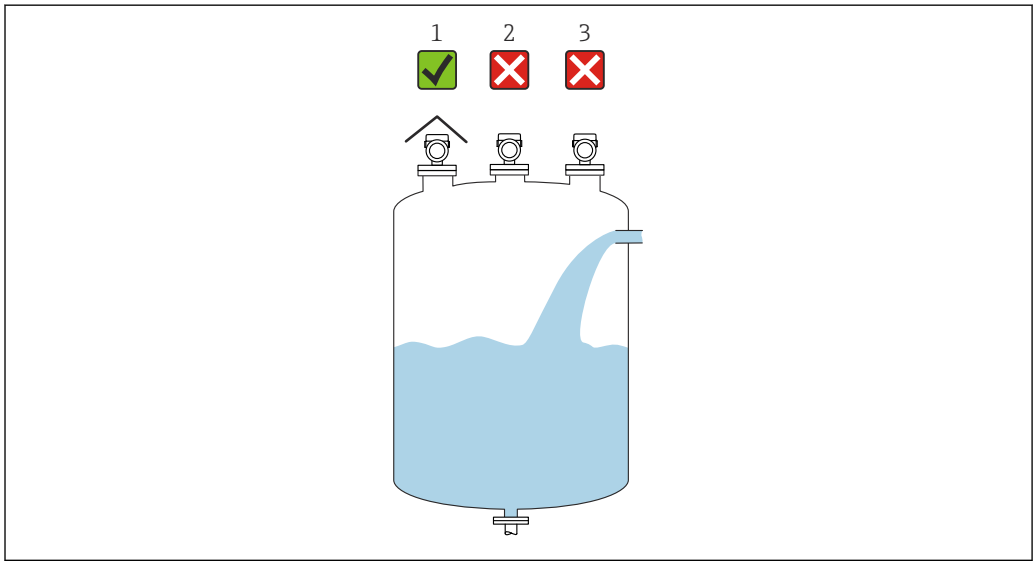

A0055811

1 *Use of a weather protection cover; protection from direct sunlight or rain*
2 *Installation in the center, interference can cause incorrect signal evaluation*
3 *Do not install above the filling curtain*

5.4 Internal vessel fittings

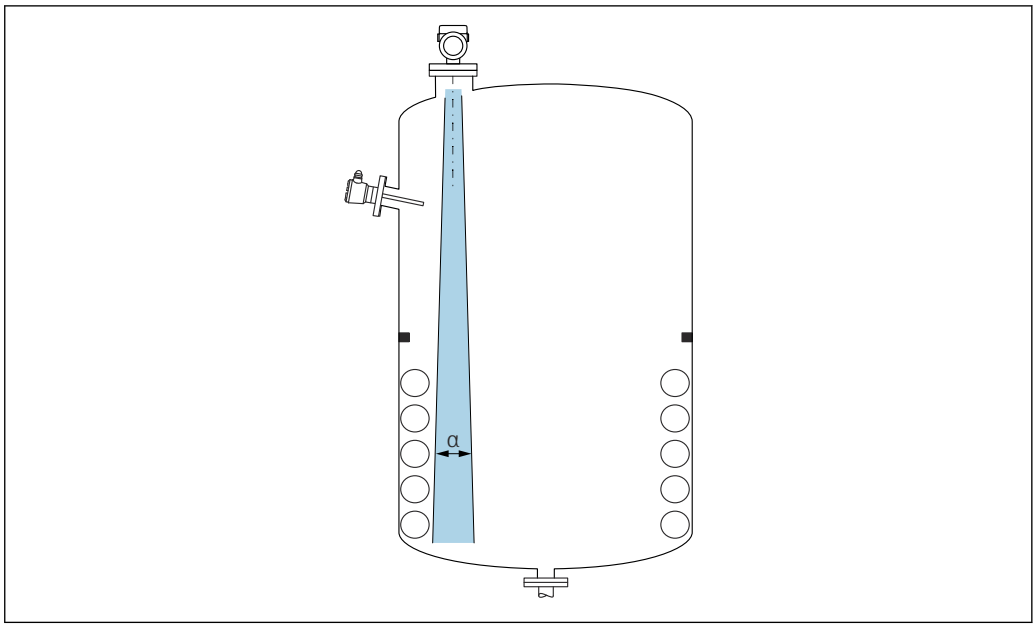

A0031777

Avoid internal fittings (point level switches, temperature sensors, struts, vacuum rings, heating coils, baffles etc.) inside the signal beam. Pay attention to the beam angle **α**.

5.5 Vertical alignment of antenna axis

Align the antenna so that it is perpendicular to the product surface.

The maximum reach of the antenna can be reduced, or additional interference signals can occur, if the antenna is not installed perpendicular to the product.

5.6 Optimization options

Mapping
Measurement can be optimized by electronically suppressing interference echoes.
See the **Confirm distance** parameter.

5.7 Mounting the device

5.7.1 Installation types

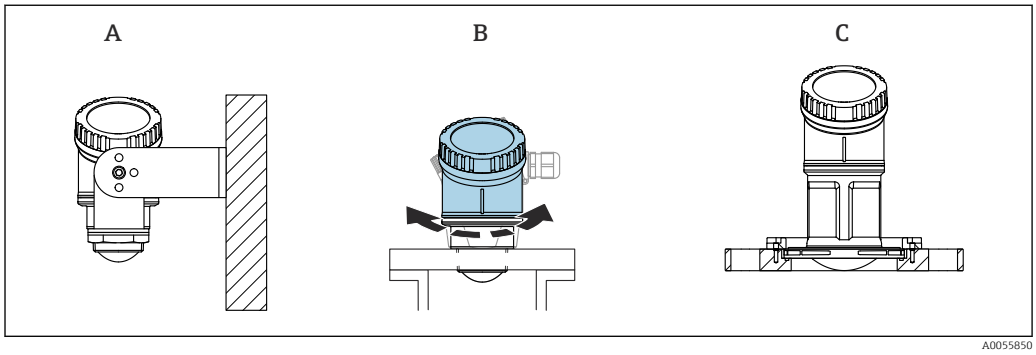

2 Wall or nozzle mounting

A Wall mounting adjustable
B Tightened at antenna end process connection, top housing section can be rotated
C Mounting with UNI slip-on flange

Caution!
- Always operate the device in a vertical position in free-space applications.
- For devices with an 80 mm antenna, installation is only possible with a UNI slip-on flange.

5.7.2 Installation instructions

The interior of the nozzle must be smooth and must not contain any edges or welded joints. The edge of the nozzle should be rounded if possible.

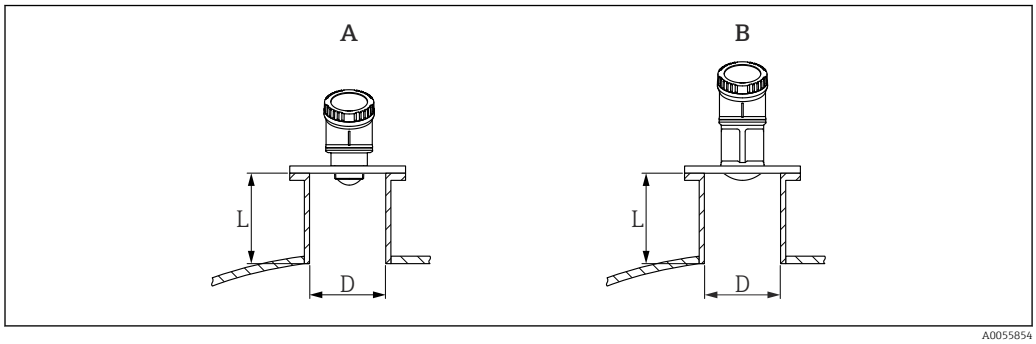

3 Nozzle installation

A 40 mm (1.5 in) antenna
B 80 mm (3 in) antenna

The maximum nozzle length **L** depends on the nozzle diameter **D**.

Please note the limits for the diameter and length of the nozzle.

40 mm (1.5 in) antenna
- D: min. 40 mm (1.5 in)
- L: max. (D - 30 mm (1.2 in)) × 7.5

80 mm (3 in) antenna
- D: min. 80 mm (3 in)
- L: max. (D - 50 mm (2 in)) × 12

5.7.3 Turning the housing

- Easy installation due to optimum alignment of housing
- Easily accessible device operation
- Optimal readability of the onsite display

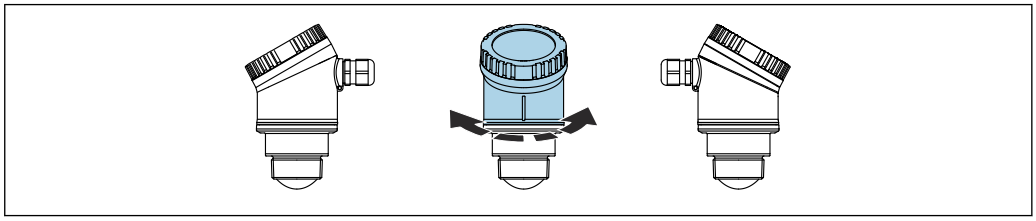

A0055932

5.7.4 Weather protective cover

A weather protective cover is recommended for outdoor use.

The weather protective cover can be ordered as an accessory or together with the device via the product structure "Accessory enclosed".

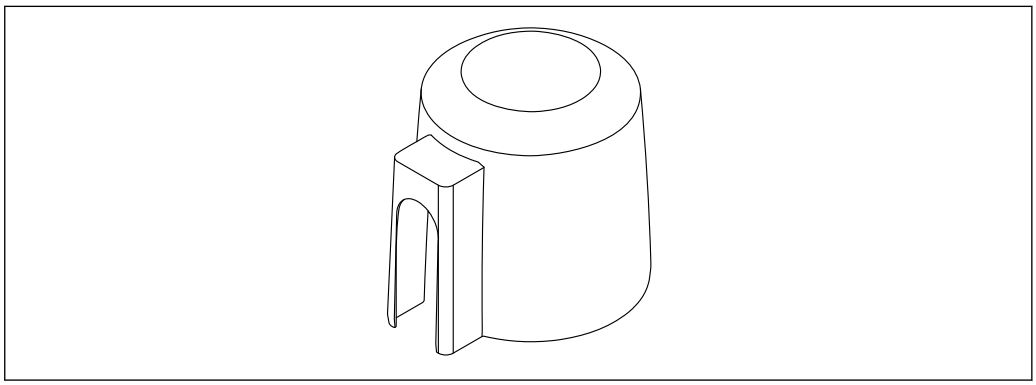

A0055360

4 *Weather protective cover*

The sensor is not completely covered by the weather protective cover.

5.7.5 Installation with mounting bracket, adjustable

The mounting bracket can be ordered as an accessory or together with the device via the product structure "Accessory enclosed".

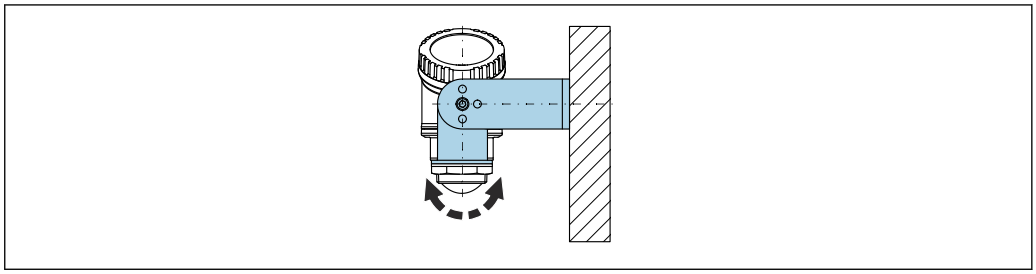

A0055857

5 *Installation with mounting bracket, adjustable*

Using the mounting bracket, position the antenna so that it is perpendicular to the product surface.

NOTICE

There is no conductive connection between the mounting bracket and transmitter housing.

Electrostatic charging possible.

▶ Integrate the mounting bracket in the local potential equalization system.

5.7.6 Cantilever installation, with pivot

The cantilever, wall bracket and mounting frame can be ordered as accessories.

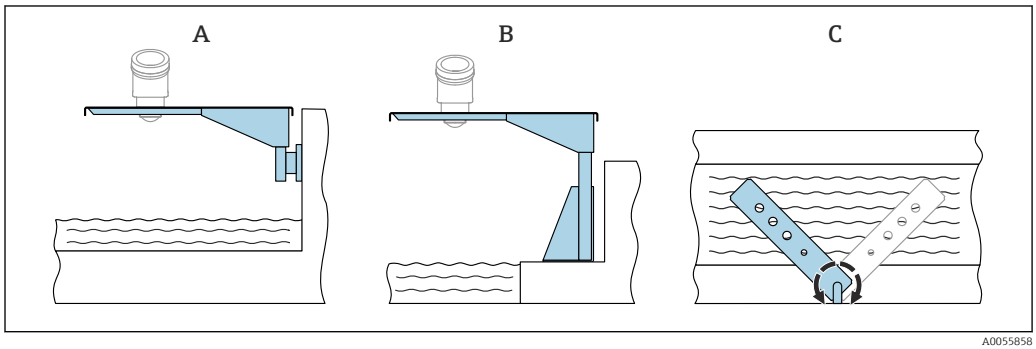

6 Cantilever installation, with pivot

A Cantilever with wall bracket (side view)
B Cantilever with mounting frame (side view)
C Cantilever can be turned, e.g. in order to position the device over the center of the flume (top view)

NOTICE

There is no conductive connection between the mounting bracket and transmitter housing.

Electrostatic charging possible.

▶ Integrate the mounting bracket in the local potential equalization system.

5.8 Post-mounting check

❑ Is the device undamaged (visual inspection)?

❑ Are the measuring point identification and labeling correct (visual inspection)?

❑ Is the device protected from precipitation and direct sunlight?

❑ Is the device properly secured?

❑ Does the device comply with the measuring point specifications?

For example:

❑ Process temperature
❑ Process pressure
❑ Ambient temperature
❑ Measuring range

6 Electrical connection

6.1 Connecting the device

6.1.1 Potential equalization

No special measures for potential equalization are required.

6.1.2 Supply voltage

12 to 30 V_{DC} on a direct current power unit

The power unit must be safety-approved (e.g. PELV, SELV, Class 2) and must comply with the relevant protocol specifications.

Protective circuits against reverse polarity, HF influences and overvoltage peaks are installed.

6.1.3 Power consumption

- Non-hazardous area: To meet device safety specifications according to the IEC/EN 61010 standard, the installation must ensure that the maximum current is limited to 500 mA.
- Hazardous area: The maximum current is restricted to Ii = 100 mA by the transmitter power supply unit when the device is used in an intrinsically safe circuit (Ex ia).

6.1.4 Connecting the device

Function diagram of 4 to 20 mA HART

Connection of the device with HART communication, power source and 4 to 20 mA indicator

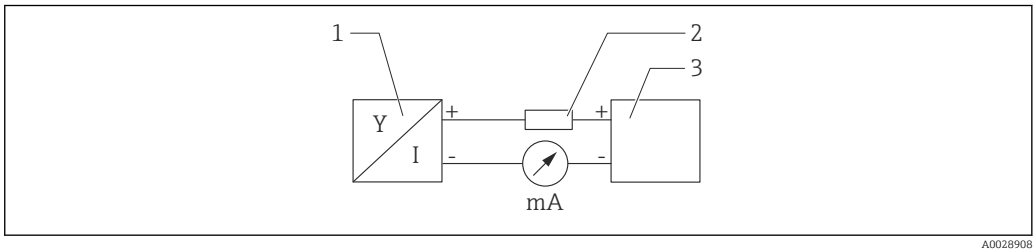

7 Function diagram of HART connection

1 Device with HART communication
2 HART resistor
3 Power supply

The HART communication resistor of 250 Ω in the signal line is always necessary in the case of a low-impedance power supply.

The voltage drop to be taken into account is:
Max. 6 V for 250 Ω communication resistor

Function diagram of HART device, connection with RIA15, display only without operation, without communication resistor

The RIA15 remote display can be ordered together with the device.

Alternatively available as an accessory, for details see Technical Information TI01043K and Operating Instructions BA01170K

Terminal assignment RIA15

- **+**
  Positive connection, current measurement
- **-**
  Negative connection, current measurement (without backlighting)
- **LED**
  Negative connection, current measurement (with backlighting)
- ⏚
  Functional grounding: Terminal in housing

The RIA15 process indicator is loop-powered and does not require any external power supply.

The voltage drop to be taken into account is:
- ≤1 V in the standard version with 4 to 20 mA communication
- ≤1.9 V with HART communication
- and an additional 2.9 V if display light is used

Connection of the HART device and RIA15 without backlighting

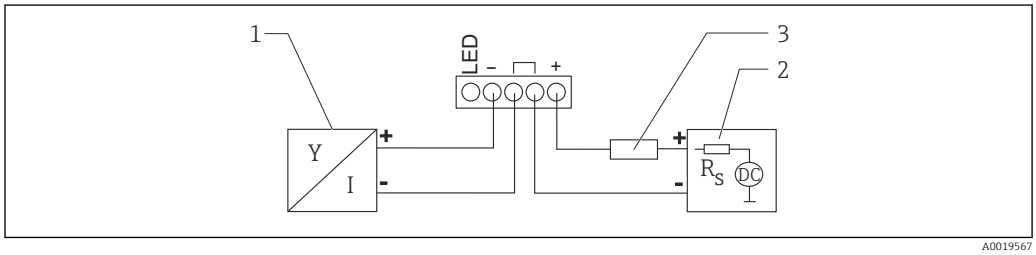

8 *Function diagram of HART device with RIA15 process indicator without light*

1 *Device with HART communication*
2 *Power supply*
3 *HART resistor*

Connection of the HART device and RIA15 with backlighting

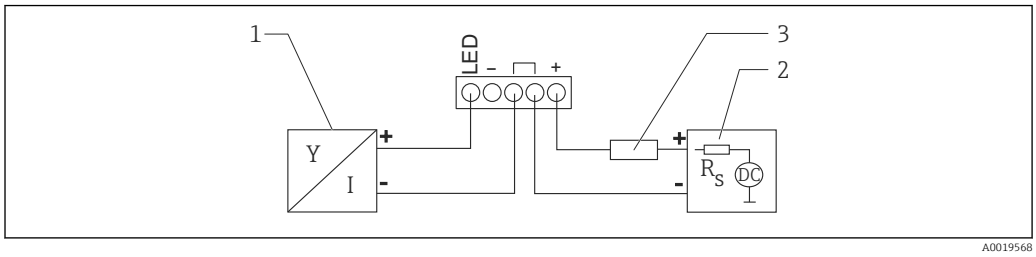

9 *Function diagram of HART device with RIA15 process indicator with light*

1 *Device with HART communication*
2 *Power supply*
3 *HART resistor*

Function diagram of HART device, RIA15 display with operation, with communication resistor

The voltage drop to be taken into account is:
Max. 7 V

Alternatively available as an accessory, for details see Technical Information TI01043K and Operating Instructions BA01170K

Connection of the HART communication resistor module, RIA15 without backlighting

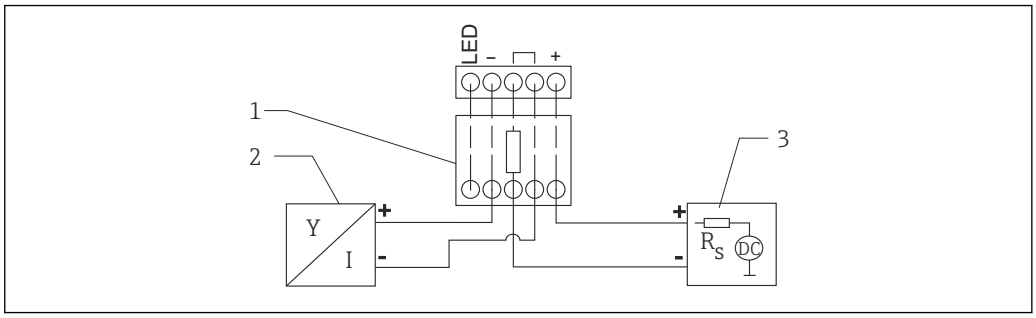

10 Function diagram of HART device, RIA15 without light, HART communication resistor module

1 HART communication resistor module
2 Device with HART communication
3 Power supply

Connection of the HART communication resistor module, RIA15 with backlighting

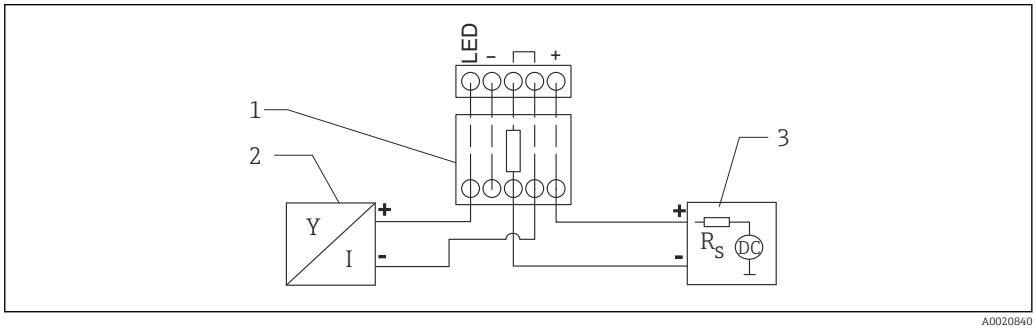

11 Function diagram of HART device, RIA15 with light, HART communication resistor module

1 HART communication resistor module
2 Device with HART communication
3 Power supply

6.1.5 Cable specification

Rated cross-section
0.5 to 2.5 mm^2 (20 to 13 AWG)

Cable outer diameter
Ø5 to 10 mm (0.2 to 0.38 in)

6.1.6 Overvoltage protection

The device satisfies the IEC/DIN EN 61326-1 product standard (Table 2 Industrial environment). Depending on the type of connection (DC power supply, input line, output line), different test levels are used to prevent transient overvoltages (IEC/DIN EN 61000-4-5 Surge) in accordance with IEC/DIN EN 61326-1: Test level for DC power supply lines and IO lines: 1 000 V wire to ground.

Overvoltage category

In accordance with IEC/DIN EN 61010-1, the device is intended for use in networks with overvoltage protection category II.

6.1.7 Wiring

WARNING

Supply voltage might be connected!
Risk of electric shock and/or explosion!

- If the device is used in hazardous areas, make sure to comply with national standards and the specifications in the Safety Instructions (XAs). The specified cable gland must be used.
- The supply voltage must match the specifications on the nameplate.
- Switch off the supply voltage before connecting the device.
- A suitable circuit breaker should be provided for the device in accordance with IEC/EN 61010.
- The cables must be adequately insulated, with due consideration given to the supply voltage and the overvoltage category.
- The connecting cables must offer adequate temperature stability, with due consideration given to the ambient temperature.
- Only operate the measuring instrument with the covers closed.

Connect the device in the following order:

1. Unscrew the cover (clicks when opening).
2. Guide the cables into the cable glands or cable entries.
3. Connect the cable.
4. Tighten the cable glands or cable entries so that they are leak-tight.
5. Screw the cover securely back onto the connection compartment (clicks when closing).

6.1.8 Terminal assignment

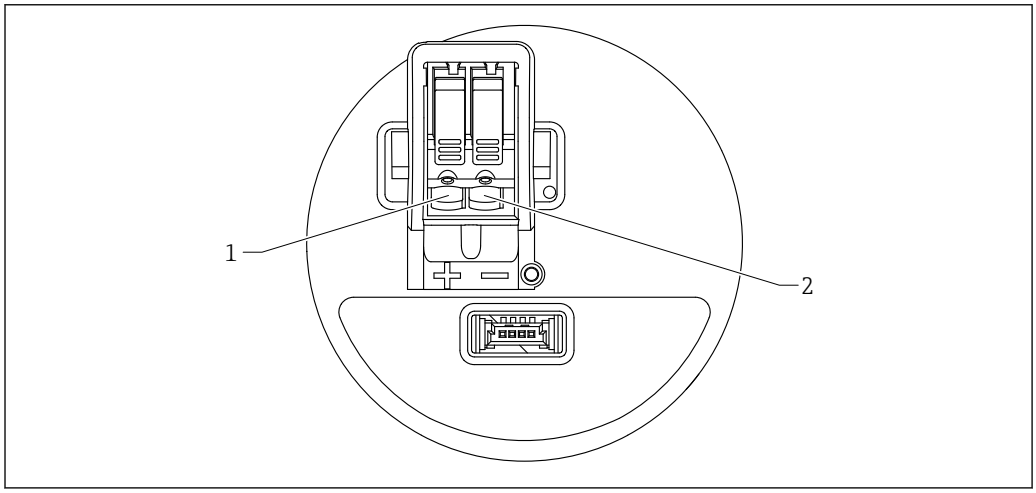

12 Terminal assignment

1 Positive terminal
2 Negative terminal

6.2 Ensuring the degree of protection

Test as per IEC 60529 Edition 2.2 2013-08/DIN EN 60529 2014-09 and NEMA 250-2014:

- IP66, NEMA Type 4X
- IP67

6.3 Post-connection check

- ❑ Is the device or cable undamaged (visual check)?
- ❑ Does the cable used comply with the requirements?
- ❑ Is the mounted cable strain-relieved?
- ❑ Is the screw connection properly mounted?
- ❑ Does the supply voltage match the specifications on the nameplate?
- ❑ No reverse polarity, terminal assignment correct?
- ❑ If supply voltage is present, is the device operational and does a screen appear?

7 Operation options

7.1 Overview of operation options

- Operation via onsite display
- Operation via Bluetooth®
- Operation via Endress+Hauser operating tool
- Operation via handheld, Fieldcare, DeviceCare, AMS and PDM

7.2 Structure and function of the operating menu

The differences between the structure of the operating menus of the onsite display and the Endress+Hauser FieldCare or DeviceCare operating tools can be summarized as follows:

The onsite display has a reduced menu to configure basic settings on the device.

The complete operating menu is available via the operating tools (FieldCare, DeviceCare, SmartBlue) in order to make more complex settings on the device.

Wizards help the user to commission the various applications. The user is guided through the individual configuration steps.

7.2.1 Overview of the operating menu

"Guidance" menu

The Guidance main menu contains functions that enable the user to carry out basic tasks quickly, e.g. commissioning. This menu primarily consists of guided wizards and special functions covering multiple areas.

"Diagnostics" menu

Diagnostic information and settings as well as help for troubleshooting.

"Application" menu

Functions for detailed adjustment of the process for optimum integration of the device into the application.

"System" menu

System settings for device management, user administration or safety.

7.2.2 User roles and related access authorization

This device supports 2 user roles: **Maintenance** and **Operator**
- The **Maintenance** user role (as delivered to customer) has read/write access.
- The **Operator** user role has read access only.

The current user role is displayed in the main menu.

The device parameters can be fully configured with the **Maintenance** user role. Afterwards, access to the configuration can be locked by assigning a password. This password acts as an access code and protects device configuration from unauthorized access.

Blocking changes the **Maintenance** user role to the **Operator** user role. The configuration can be accessed again by entering the access code.

If an incorrect access code is entered, the user obtains the access rights of the**Operator** role.

Assign password, change user role:

▶ Navigation: System → User management

7.3 Access to operating menu via onsite display

Functions:
- Display measured values and fault and notice messages
- Display a symbol in the event of an error
- Electronically adjustable onsite display (automatic and manual adjustment of display in 90° steps)
  ℹ The measured value display rotates automatically depending on the orientation when the device is started.
- Basic settings via the onsite display with touch control [1)]
  - Select the operating language
  - Start Heartbeat Verification with passed/failed feedback message on the onsite display
  - Locking On/Off
  - Bluetooth On/Off
  - Commissioning wizard for basic settings (flow cannot be configured via the onsite display)
  - Read the device information, such as the name, serial number and firmware version
  - Active diagnosis and status
  - Device reset
  - Reverse colors

The backlighting is automatically adjusted depending on the terminal voltage.

The default display can be permanently set via the operating menu.

ℹ The following figure is an example. The display depends on the settings of the onsite display.

Optional display by swiping from left to right (see A, B and C in the following graphic). The swiping motion only works if the display has been ordered with touch control and the display has been unlocked beforehand.

1) In devices without touch control, settings can be made using operating tools (FieldCare, DeviceCare, SmartBlue).

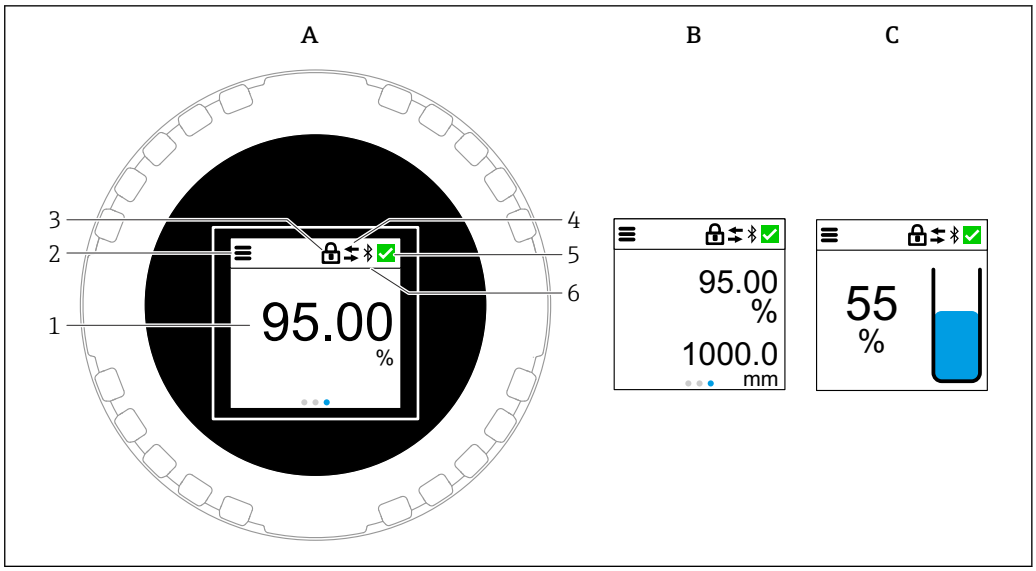

A0056185

A Standard display: 1 measured value with unit (adjustable)
B 2 measured values, each with unit (adjustable)
C Graphic measured value display in %, level indicator in proportion to the measured value
1 Measured value
2 Menu or home symbol
3 Locking (locking only visible if locked via the "Safety mode" wizard. The "Safety mode" wizard is available if the WHG option or Heartbeat Verification option have been selected
4 Communication (symbol appears if communication is enabled)
5 Diagnostic symbol
6 Bluetooth (symbol flashes when Bluetooth connection is enabled)

7.3.1 User operation

Navigation

Navigation by swiping with finger.

Operation via the onsite display is not possible if the Bluetooth connection is enabled.

Selecting option and confirming

Select the required option and confirm using the checkmark at the top right (see screens below).

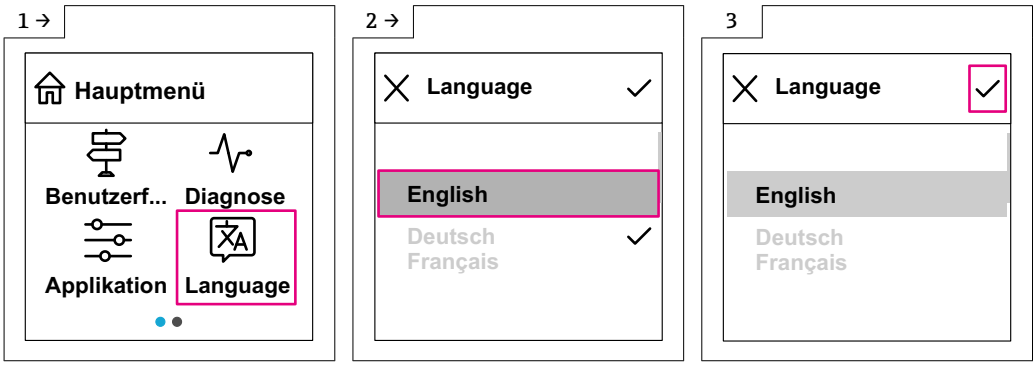

A0056186 A0056187 A0056188

7.4 Onsite display, locking or unlocking procedure

7.4.1 Unlocking procedure

1. Tap the center of the display for the following view:
   ↳
   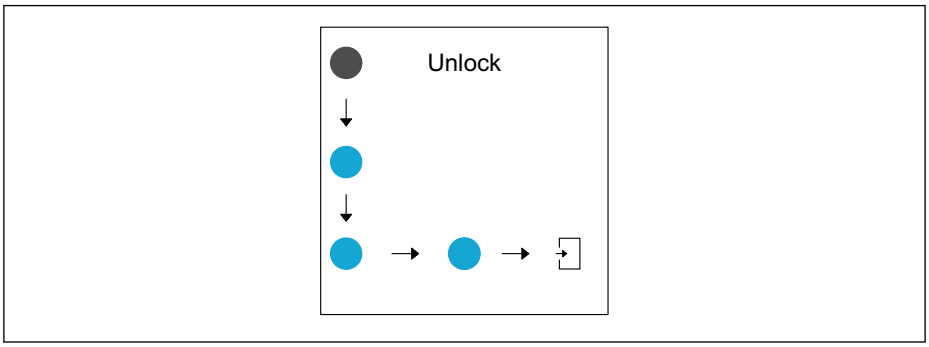

2. Use a finger to follow the arrows without interruption.
   ↳ The display is unlocked.

7.4.2 Locking procedure

Operation locks automatically (except in the **Safety mode** wizard):
- after 1 min on the main page
- after 10 min within the operating menu

7.5 Operation via Bluetooth® wireless technology (optional)

Prerequisite
- Device with Bluetooth order option
- Smartphone or tablet with Endress+Hauser SmartBlue app or PC with DeviceCare from version 1.07.07 or FieldXpert SMT70/SMT77

The connection has a range of up to 25 m (82 ft). The range can vary depending on environmental conditions such as attachments, walls or ceilings.

7.6 Access to the operating menu via the operating tool

7.6.1 Connecting the operating tool

Access via the operating tool is possible:

- Via HART communication, e.g. Commubox FXA195
- Via Bluetooth (optional)

FieldCare

Function range

FDT-based plant asset management tool from Endress+Hauser. FieldCare can configure all smart field devices in a system and helps you manage them. By using the status information, FieldCare is also a simple but effective way of checking their status and condition.

Access is via digital communication (Bluetooth, HART communication)

Typical functions:
- Configuration of transmitter parameters
- Loading and saving of device data (upload/download)
- Documentation of the measuring point
- Visualization of the measured value memory (line recorder) and event logbook

For additional information on FieldCare: See Operating Instructions for FieldCare

DeviceCare

Range of functions

Tool to connect and configure Endress+Hauser field devices.

For details, see Innovation Brochure IN01047S.

FieldXpert SMT70, SMT77

The Field Xpert SMT70 tablet PC for device configuration enables mobile plant asset management in hazardous (Ex Zone 2) and non-hazardous areas. It is suitable for commissioning and maintenance staff. It manages Endress+Hauser and third-party field instruments with a digital communication interface and documents the progress of the work. The SMT70 is designed as a complete solution. It comes with a pre-installed driver library and is an easy-to-use, touch-enabled tool for managing field devices throughout their entire life cycle.

Technical Information TI01342S

The Field Xpert SMT77 tablet PC for device configuration enables mobile plant asset management in areas categorized as Ex Zone 1.

Technical Information TI01418S

7.6.2 Operation via SmartBlue App

The device can be operated and configured with the SmartBlue App.

- The SmartBlue App must be downloaded onto a mobile device for this purpose.
- For information on the compatibility of the SmartBlue App with mobile devices, see **Apple App Store (iOS devices)** or **Google Play Store (Android devices).**
- Incorrect operation by unauthorized persons is prevented by means of encrypted communication and password encryption.
- The Bluetooth® function can be deactivated after initial device setup.

ANDROID APP ON Google Play

Download on the App Store

A0033202

13 QR code for free Endress+Hauser SmartBlue App

Download and installation:

1. Scan the QR code or enter **SmartBlue** in the search field of the Apple App Store (iOS) or Google Play Store (Android).
2. Install and start the SmartBlue App.
3. For Android devices: enable location tracking (GPS) (not required for iOS devices).
4. Select a device that is ready to receive from the device list displayed.

Login:

1. Enter the user name: admin
2. Enter the initial password: serial number of the device

Change the password after logging in for the first time.

Forgotten your password? Contact Endress+Hauser Service.

8 System integration

8.1 Overview of device description files

- Manufacturer ID: 17 (0x0011)
- Device type ID: 0x11C1
- HART specification: 7.6
- DD files, information and files can be found at:
  - www.endress.com
  - www.fieldcommgroup.org

8.2 Measured variables via HART protocol

The following measured values are assigned to the device variables at the factory:

Device variable	Measured value
Primary variable (PV)	Level linearized
Secondary variable (SV)	Distance
Tertiary variable (TV)	Absolute echo amplitude
Quaternary variable (QV)	Relative echo amplitude

The assignment of the measured values to the device variables can be changed in the following submenu:
Application → HART output → HART output

In a HART Multidrop loop, only one device may use the analog current value for signal transmission. For all other devices in **"Loop current mode" parameter**, select **Disable** option.

9 Commissioning

9.1 Preliminaries

WARNING

Settings on the current output can result in a safety-related condition (e.g., product overflow)!

- ▶ Check current output settings.
- ▶ The setting of the current output depends on the setting in the **Assign PV** parameter.

9.2 Installation and function check

Before commissioning the measuring point, check whether the post-installation and post-connection checks have been performed.

Post-mounting check

Post-connection check

9.3 Overview of commissioning options

- Commissioning via onsite display
- Commissioning with the SmartBlue app
- Commissioning via FieldCare/DeviceCare/Field Xpert
- Commissioning via additional operating tools (AMS, PDM, etc.)

9.4 Commissioning via onsite display

If necessary, enable operation (see section "Onsite display, locking or unlocking procedure" > "Unlocking procedure").

Start the **Commissioning** wizard

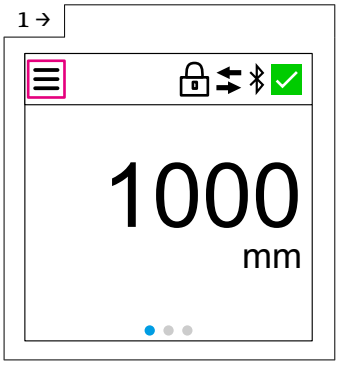

A0056190

▶ Press the menu icon

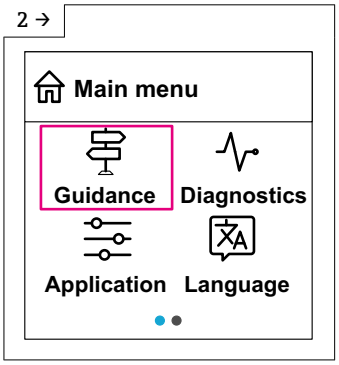

A0056191

▶ Select the **Guidance** menu

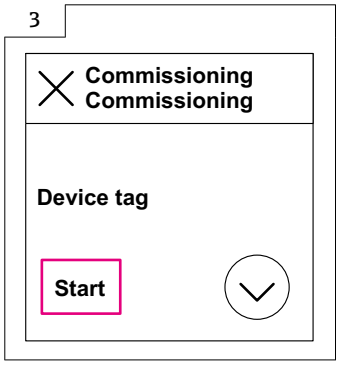

A0056192

▶ Start the **Commissioning** wizard

Medium standard setting is "Liquid".

The commissioning wizard does not query the medium. If the device is used in solids, the medium must be changed via the onsite display or the SmartBlue app.

Navigation: Application → Sensor → Basic settings → Medium type

Flow applications cannot be configured via the onsite display; only configurable via digital communication (Bluetooth and HART)

9.5 Commissioning via SmartBlue app

9.5.1 Device requirements

Commissioning via SmartBlue is only possible if the device has Bluetooth capability (Bluetooth module installed at the factory prior to delivery or retrofitted).

9.5.2 SmartBlue App

1. Scan the QR code or enter "SmartBlue" in the search field of the App Store.
   ↳

   A0039186

   14 Download link
2. Start SmartBlue.
3. Select device from livelist displayed.
4. Enter the login data:
   ↳ User name: admin
   Password: serial number of the device
5. Tap the icons for more information.

After logging in for the first time, change the password!

9.6 Commissioning via FieldCare/DeviceCare

1. Download the DTM: http://www.endress.com/download -> Device Driver -> Device Type Manager (DTM)
2. Update the catalog.
3. Click the **Guidance** menu and start the **Commissioning** wizard.

9.6.1 Connecting via FieldCare, DeviceCare and FieldXpert

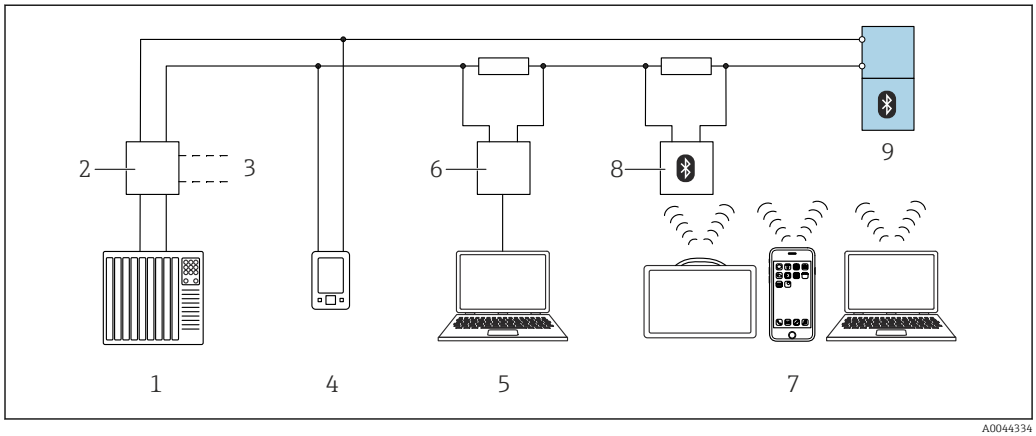

A0044334

15 Options for remote operation via HART protocol

1 *PLC (programmable logic controller)*
2 *Transmitter power supply unit, e.g. RN42*
3 *Connection for Commubox FXA195 and AMS Trex™ device communicator*
4 *AMS Trex™ device communicator*
5 *Computer with operating tool (e.g. DeviceCare/FieldCare , AMS Device View, SIMATIC PDM)*
6 *Commubox FXA195 (USB)*
7 *Field Xpert SMT70/SMT77, smartphone or computer with operating tool (e.g. DeviceCare/FieldCare , AMS Device View, SIMATIC PDM)*
8 *Bluetooth modem with connecting cable (e.g. VIATOR)*
9 *Transmitter*

9.7 Commissioning via additional operating tools (AMS, PDM, etc.)

Download the device-specific drivers: https://www.endress.com/en/downloads

For more details, see the help for the relevant operating tool.

9.8 Notes on the "Commissioning" wizard

The **Commissioning** wizard enables simple, user-guided commissioning.

1. Once you have started the **Commissioning** wizard, enter the appropriate value in each parameter or select the appropriate option. These values are written directly to the device.
2. Click > to go to the next page.
3. Once all pages have been completed, click OK to close the **Commissioning** wizard.

If the **Commissioning** wizard is canceled before all necessary parameters have been configured, the device may be in an undefined state. In such situations, it is advisable to reset the device to the factory default settings.

Medium standard setting is "Liquid".

The commissioning wizard does not query the medium. If the device is used in solids, the medium must be changed via the onsite display or the SmartBlue app.

Navigation: Application → Sensor → Basic settings → Medium type

Flow applications cannot be configured via the onsite display; only configurable via digital communication (Bluetooth and HART)

9.9 Configuring the device address via software

See "HART address" parameter
Enter the address to exchange data via the HART protocol.
- Guidance → Commissioning → HART address
- Application → HART output → Configuration → HART address
- Default HART address: 0

9.10 Configuring the operating language

9.10.1 Onsite display

Configuring the operating language

Before you can set the operating language, you must first unlock the onsite display:

- Open the operating menu.

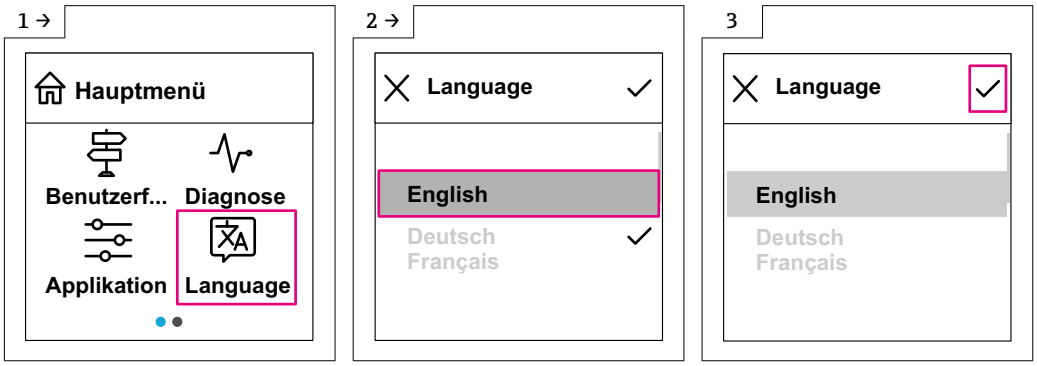

A0056186 A0056187 A0056188

- Select the Language button.

9.10.2 Operating tool

Set display language

System → Display → Language

9.11 Configuring the device

Commissioning via the Commissioning wizard is recommended.

See "Commissioning with SmartBlue" section

See "Commissioning via FieldCare/DeviceCare" section

9.11.1 Level measurement in liquids

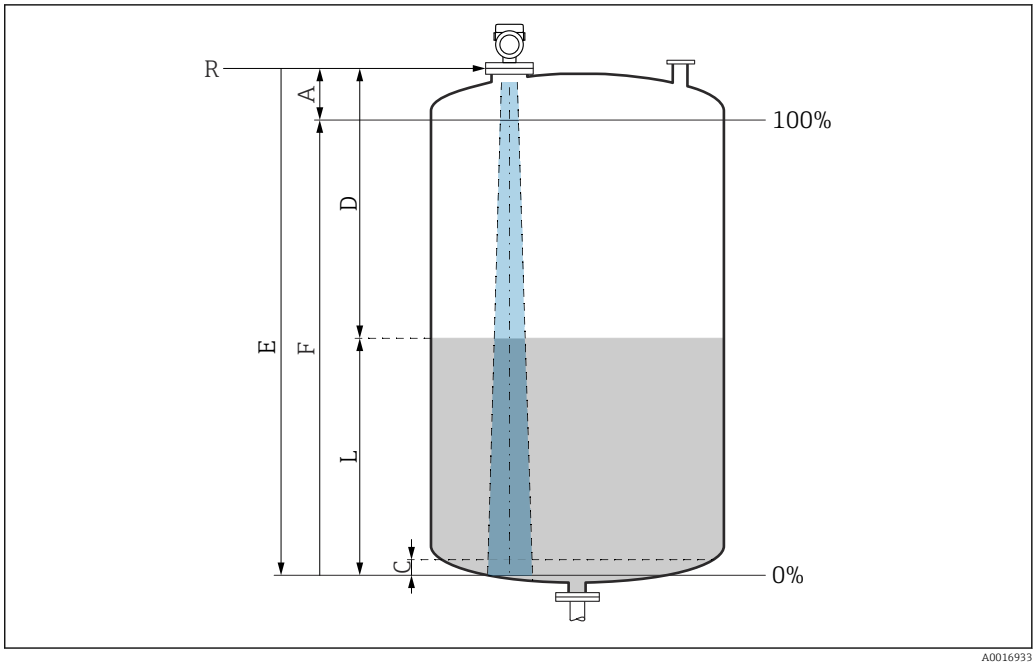

16 *Configuration parameters for level measurement in liquids*

R Reference point of measurement
A Length of antenna + 10 mm (0.4 in)
C 50 to 80 mm (1.97 to 3.15 in); medium εr < 2
D Distance
L Level
E "Empty calibration" parameter (= 0 %)
F "Full calibration" parameter (= 100 %)

In the case of media with a low dielectric constant, εr < 2 , the tank floor may be visible through the medium at very low levels (lower than level C). Reduced accuracy must be expected in this range. If this is not acceptable, the zero point should be positioned at a distance C above the tank floor for these applications (see figure).

9.11.2 Level measurement in bulk solids

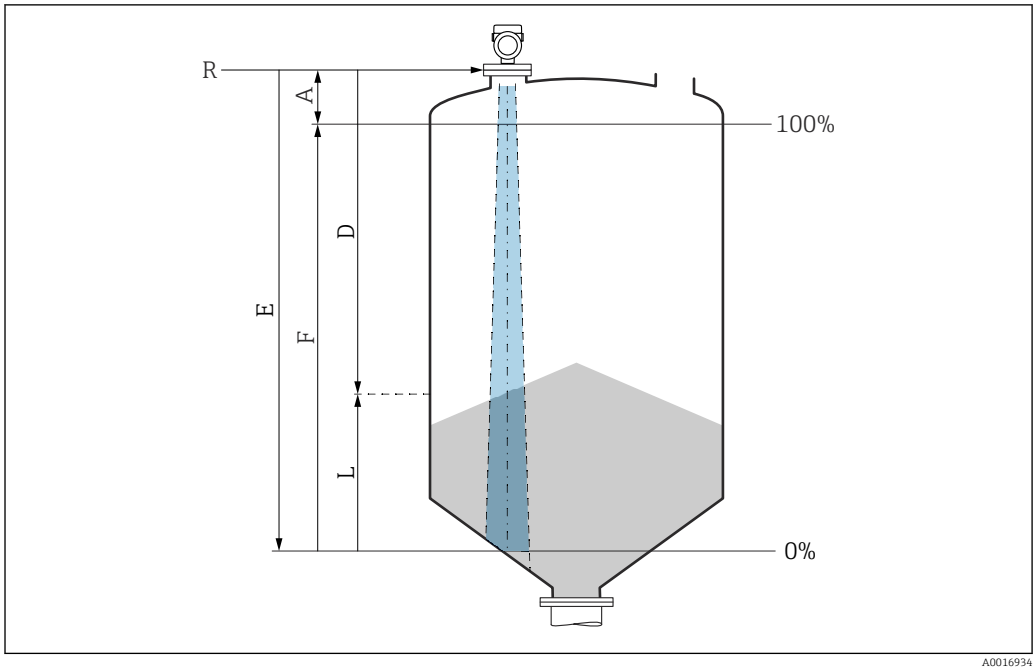

17 Configuration parameters for level measurement in bulk solids

R Reference point of measurement
A Length of antenna + 10 mm (0.4 in)
D Distance
L Level
E "Empty calibration" parameter (= 0 %)
F "Full calibration" parameter (= 100 %)

9.11.3 Configuring flow measurement via operating software

Installation conditions for flow measurement

- A channel or a weir is required for flow measurement
- Position the sensor in the center of the channel or weir
- Align the sensor so that it is perpendicular to the surface of the water
- Use a weather protection cover to protect the device from sunshine and rain

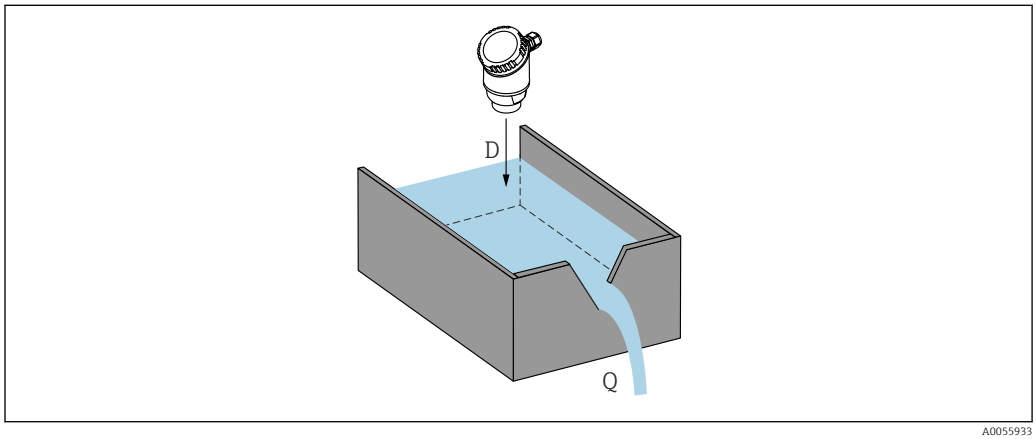

18 Configuration parameters for the flow measurement of liquids

D Distance
Q Flow rate at measuring weirs or channels (calculated from the level using linearization)

Flow measurement configuration

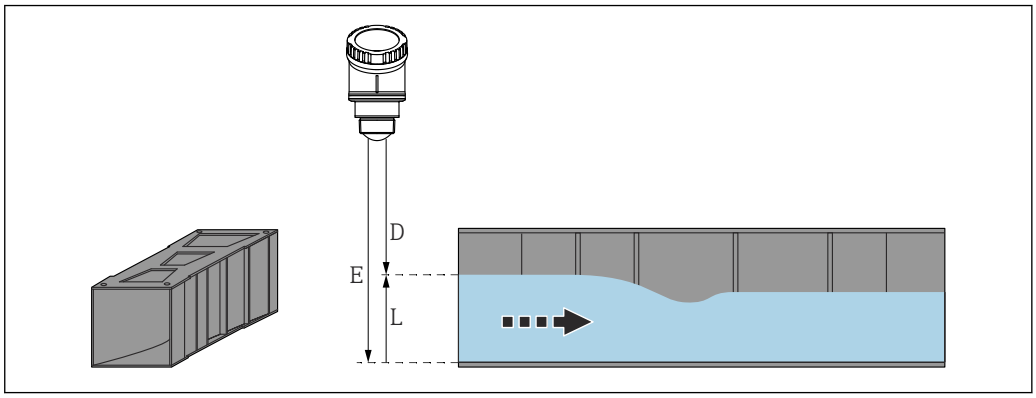

19 *Example: Khafagi-Venturi flume*

E *Empty calibration (= zero point)*
D *Distance*
L *Level*

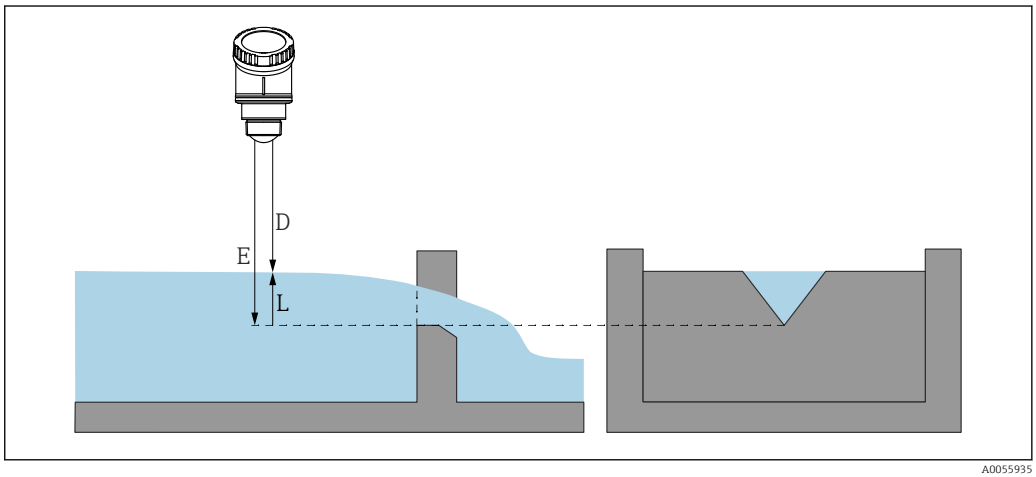

20 *Example: Triangular weir*

E *Empty calibration (= zero point)*
D *Distance*
L *Level*

Flow applications cannot be configured via the onsite display; only configurable via digital communication (Bluetooth and HART)

9.11.4 Configuring "Frequency mode" parameter

The **Frequency mode** parameter is used to define country or region-specific settings for the radar signals.

The **Frequency mode** parameter must be configured at the start of commissioning in the operating menu using the appropriate operating tool.

Application → Sensor → Advanced settings → Frequency mode

Operating frequency 80 GHz:
- **Mode 2** option: Continent Europe, USA, Australia, New Zealand, Canada, Brazil, Japan, South Korea, Taiwan, Thailand
- **Mode 3** option: Russia, Kazakhstan
- **Mode 4** option: Mexico
- **Mode 5** option: India, Malaysia, South Africa, Indonesia

The metrological properties of the device may vary, depending on the mode set. The specified metrological properties refer to the device as supplied to the customer (**Mode 2** option).

9.11.5 "Simulation" submenu

Process variables and diagnostic events can be simulated with the **Simulation** submenu.

Navigation: Diagnostics → Simulation

During simulation of the switch output or current output, the device issues a warning message for the duration of the simulation.

9.12 Protecting settings from unauthorized access

9.12.1 Software locking or unlocking

Locking via password in FieldCare/DeviceCare/SmartBlue app

Access to parameter configuration of the device can be locked by assigning a password. When the device is delivered from the factory, the user role is set to **Maintenance** option. The device parameters can be fully configured with the **Maintenance** option user role. Afterwards, access to the configuration can be locked by assigning a password. The **Maintenance** option switches to the **Operator** option as a result of this locking. The configuration can be accessed by entering the password.

The password is defined under:

System menu **User management** submenu

The user role is changed from the **Maintenance** option to **Operator** option under:

System → User management

Canceling the locking procedure via onsite display/FieldCare/DeviceCare/SmartBlue

After entering the password, you can enable parameter configuration of the device as an **Operator** option with the password. The user role then changes to the **Maintenance** option.

If necessary, the password can be deleted in User management: System → User management

10 Operation

10.1 Reading the device locking status

10.1.1 Onsite display

Onsite display locked:
The main page does **not** display the menu symbol

10.1.2 Operating tool

Operating tool (FieldCare/DeviceCare/FieldXpert/SmartBlue app)

Navigation: System → Device management → Locking status

10.2 Reading off measured values

The measured values can be read off via the operating tool or the display.

Navigation: **Application** menu → **Measured values** submenu

10.3 Adapting the device to process conditions

The following menus are available for this purpose:
- Basic settings in the **Guidance** menu
- Advanced settings in:
  - **Diagnostics** menu
  - **Application** menu
  - **System** menu

For details, see the "Description of device parameters" documentation.

10.4 Heartbeat Technology (optional)

10.4.1 Heartbeat Verification

The **Heartbeat** submenu is only available during operation via FieldCare, DeviceCare or SmartBlue app. Within this submenu, users can access a wizard provided by the Heartbeat Verification application package.

Documentation on the Heartbeat Technology: Endress+Hauser website: www.endress.com → Downloads.

"Heartbeat Verification" wizard
This wizard is used to start an automatic verification of the device functionality. The results can be documented as a verification report.
- The wizard can be used via the operating tools and the onsite display.
  The wizard can be started on the onsite display, but only shows the result **Passed** option or **Failed** option.
- The wizard guides the user through the entire process for creating the verification report.

10.5 Proof test for WHG devices (optional) [2)]

The "Proof test" module contains the **Proof test** wizard required at appropriate intervals for the following applications: WHG (German Water Resources Act):
- The wizard can be used via the operating tools (SmartBlue app, DTM).
- The wizard guides the user through the entire process for creating the verification report.
- The verification report can be saved as a PDF file.

2) Only available for devices with WHG approval

11 Diagnostics and troubleshooting

11.1 General troubleshooting

11.1.1 General errors

Device fails to start

- Possible cause: Supply voltage does not match the specification on the nameplate
  Remedial action: Apply the correct voltage
- Possible cause: The polarity of the supply voltage is wrong
  Remedial action: Correct the polarity
- Possible cause: Load resistance too high
  Remedial action: Increase the supply voltage to reach the minimum terminal voltage

HART communication not working

- Possible cause: Communication resistor missing or incorrectly installed
  Remedial action: Install the communication resistor (250 Ω) correctly.
- Possible cause: Commubox is connected incorrectly
  Remedial action: Connect Commubox correctly

11.1.2 Error - SmartBlue operation with Bluetooth®

Operation via SmartBlue is only possible on devices that have a display with Bluetooth (optionally available).

Device is not visible in the live list

- Possible cause: No Bluetooth connection available
  Remedial action: Enable Bluetooth in the field device via display or software tool and/or in the smartphone/tablet
- Possible cause: Bluetooth signal outside range
  Remedial action: Reduce distance between field device and smartphone/tablet
  The connection has a range of up to 25 m (82 ft)
  Operating radius with intervisibility 10 m (33 ft)
- Possible cause: Geopositioning is not enabled on Android devices or is not permitted for the SmartBlue app
  Remedial action: Enable/permit the geopositioning service on Android device for the SmartBlue app
- Display does not have Bluetooth

Device appears in the live list but a connection cannot be established

- Possible cause: The device is already connected with another smartphone/tablet via Bluetooth
  Only one point-to-point connection is permitted
  Remedial action: Disconnect the smartphone/tablet from the device
- Possible cause: Incorrect user name and password
  Remedial action: The standard user name is "admin" and the password is the device serial number indicated on the device nameplate (only if the password was not changed by the user beforehand)
  If the password has been forgotten, contact Endress+Hauser Service (www.addresses.endress.com)

Connection via SmartBlue not possible

- Possible cause: Incorrect password entered
  Remedial action: Enter the correct password, paying attention to lower/upper case
- Possible cause: Forgotten password
  If the password has been forgotten, contact Endress+Hauser Service (www.addresses.endress.com)

Login via SmartBlue not possible

- Possible cause: Device is being put into operation for the first time
  Remedial action: Enter the user name "admin" and the password (device serial number), paying attention to lower/upper case
- Possible cause: The electric current and voltage are not correct.
  Remedial action: Increase the supply voltage.

Device cannot be operated via SmartBlue

- Possible cause: Incorrect password entered
  Remedial action: Enter the correct password, paying attention to lower/upper case
- Possible cause: Forgotten password
  If the password has been forgotten, contact Endress+Hauser Service (www.addresses.endress.com)
- Possible cause: **Operator** option has no authorization
  Remedial action: Change to the **Maintenance** option

11.1.3 Measures

For information on measures in the case of an error message: See "Pending diagnostic messages" section.

If the measures do not rectify the problem, contact your Endress+Hauser office.

11.1.4 Additional tests

If no clear cause of the error can be identified or the source of the problem can be both the device and the application, the following additional tests can be performed:

1. Check the digital value (e.g. value from onsite display or value from digital communication).
2. Check that the device concerned is functioning correctly. Replace the device if the digital value does not correspond to the expected value.
3. Switch on simulation and check the current output. Replace the device if the current output does not correspond to the simulated value.
4. Reset the device to the factory setting.

11.1.5 Behavior of the device in the event of a power outage

In the event of an unexpected power outage, the dynamic data are stored permanently (according to NAMUR NE 032).

11.1.6 Behavior of the current output in the event of a failure

The behavior of the current output in the event of failures is defined by the **Failure behavior current output** parameter.

Parameter overview with brief description

Parameter	Description	Selection / User entry
Failure behavior current output	Defines which current the output assumes in the case of an error. Min: < 3.6 mA Max: >21.5 mA Note: The hardware DIP Switch for alarm current (if available) has priority over software setting.	▪ Min. ▪ Max.
Failure current	Enter current output value in alarm condition	21.5 to 23 mA

11.2 Diagnostic information on local display

11.2.1 Diagnostic message

Measured value display and diagnostic message in the event of a failure

Failures detected by the device's self-monitoring system are displayed as a diagnostic message in alternation with the unit.

Status signals

F

"Failure (F)" option
A device error has occurred. The measured value is no longer valid.

C

"Function check (C)" option
The device is in the service mode (e.g. during a simulation).

S

"Out of specification (S)" option
The device is being operated:
- Outside of its technical specifications (e.g. during startup or a cleaning)
- Outside of the configuration performed by the user (e.g. level outside configured span)

M

"Maintenance required (M)" option
Maintenance required. The measured value is still valid.

Diagnostic event and event text

The failure can be identified by means of the diagnostic event.

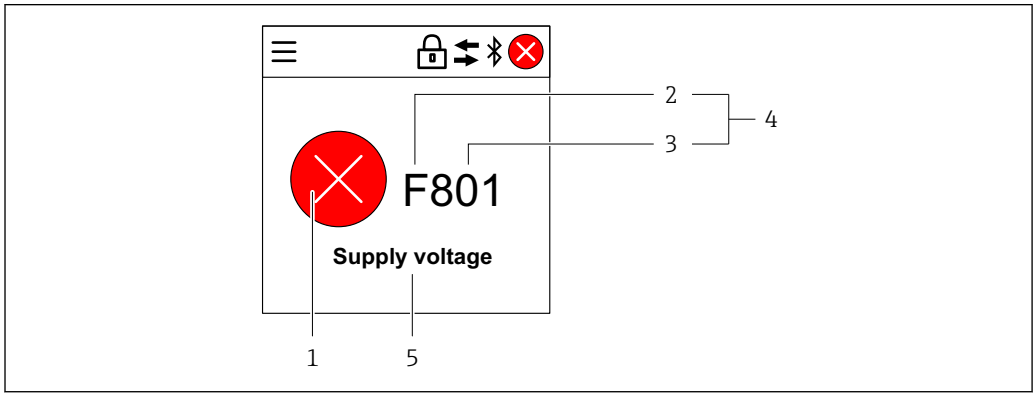

A0056193

1 *Status symbol*
2 *Status signal*
3 *Event number*
4 *Diagnostic event*
5 *Brief description of the diagnostic event*

If several diagnostic events are pending at the same time, only the diagnostic message with the highest priority is displayed.

11.3 Diagnostic event in the operating tool

If a diagnostic event has occurred in the device, the status signal appears in the top left status area of the operating tool together with the corresponding symbol for the event level according to NAMUR NE 107:

- Failure (F)
- Function check (C)
- Out of specification (S)
- Maintenance required (M)

Click the status signal to see the detailed status signal.

The diagnostic events and remedial measures can be printed from the **Diagnostic list** submenu.

11.4 Adapting the diagnostic information

The event level can be configured:

Navigation: Diagnostics → Diagnostic settings → Configuration

11.5 Pending diagnostic messages

Pending diagnostic messages are displayed in alternating sequence with the measured value display in the onsite display.

Pending diagnostic messages can be displayed in the **Active diagnostics** parameter.

Navigation: Diagnostics → Active diagnostics

11.6 Diagnostic list

All of the diagnostic messages currently pending can be displayed in the **Diagnostic list** submenu.

Navigation:Diagnostics → Diagnostic list

11.6.1 List of diagnostic events

Diagnosis 168, 242, 252, 806 and 952 cannot occur with this device.

For diagnoses 270, 273 and 805: The device must be replaced if the electronics are replaced.

Diagnostic number	Short text	Remedy instructions	Status signal [from the factory]	Diagnostic behavior [from the factory]
Diagnostic of sensor				
062	Sensor connection faulty	Check sensor connection	F	Alarm
151	Sensor electronic failure	1. Restart device 2. Contact service	F	Alarm
168	Buildup detected	Check process conditions	M	Warning [1)]
Diagnostic of electronic				
203	HART Device Malfunction	Check device specific diagnosis.	S	Warning
204	HART Electronic Defect	Check device specific diagnosis.	F	Alarm

Diagnostic number	Short text	Remedy instructions	Status signal [from the factory]	Diagnostic behavior [from the factory]
242	Firmware incompatible	1. Check software 2. Flash or change main electronic module	F	Alarm
252	Module incompatible	1. Check if correct electronic module is plugged 2. Replace electronic module	F	Alarm
270	Main electronics defective	Replace main electronics or device.	F	Alarm
272	Main electronics faulty	1. Restart device 2. Contact service	F	Alarm
273	Main electronics defective	Replace main electronics or device.	F	Alarm
282	Data storage inconsistent	Restart device	F	Alarm
283	Memory content inconsistent	1. Restart device 2. Contact service	F	Alarm
287	Memory content inconsistent	1. Restart device 2. Contact service	M	Warning
388	Electronics and HistoROM defective	1. Restart device 2. Replace electronics and HistoROM 3. Contact service	F	Alarm
Diagnostic of configuration				
410	Data transfer failed	1. Retry data transfer 2. Check connection	F	Alarm
412	Processing download	Download active, please wait	C	Warning
420	HART Device Configuration Locked	Check device locking configuration.	S	Warning
421	HART Loop Current fixed	Check Multi-drop mode or current simulation.	S	Warning
430	Configuration faulty	1. Check configuration 2. Adapt configuration	F	Alarm
431	Trim required	Carry out trim	C	Warning
435	Linearization faulty	Check linearization table	F	Alarm
437	Configuration incompatible	1. Update firmware 2. Execute factory reset	F	Alarm
438	Dataset different	1. Check dataset file 2. Check device parameterization 3. Download new device parameterization	M	Warning
441	Current output 1 saturated	1. Check process 2. Check current output settings	S	Warning
452	Calculation error detected	1. Check device configuration 2. Up- and download new configuration	F	Alarm
484	Failure mode simulation active	Deactivate simulation	C	Alarm
485	Process variable simulation active	Deactivate simulation	C	Warning
491	Current output simulation active	Deactivate simulation	C	Warning

Diagnostic number	Short text	Remedy instructions	Status signal [from the factory]	Diagnostic behavior [from the factory]
495	Diagnostic event simulation active	Deactivate simulation	S	Warning
538	Configuration Sensor Unit invalid	1. Check sensor configuration 2. Check device configuration	F	Alarm
585	Simulation distance	Deactivate simulation	C	Warning
586	Record map	Recording of mapping please wait	C	Warning
Diagnostic of process				
801	Supply voltage too low	Increase supply voltage	F	Alarm
802	Supply voltage too high	Decrease supply voltage	S	Warning
805	Loop current faulty	1. Check wiring 2. Replace electronics or device	F	Alarm
806	Loop diagnostics	1. Check supply voltage 2. Check wiring and terminals	M	Warning [1)]
807	No Baseline due to insuf. volt. at 20 mA	Increase supply voltage	M	Warning
825	Electronics temperature	1. Check ambient temperature 2. Check process temperature	S	Warning
826	Sensor temperature out of range	1. Check ambient temperature 2. Check process temperature	S	Warning
843	Process value above limit	1. Decrease process value 2. Check application 3. Check sensor	F	Alarm
844	Process value out of specification	1. Check process value 2. Check application 3. Check sensor	S	Warning [1)]
846	HART Non-Primary Variable Out of Limit	Check device specific diagnosis.	S	Warning
847	HART Primary Variable Out of Limit	Check device specific diagnosis.	S	Warning
848	HART Device Variable Alert	Check device specific diagnosis.	S	Warning
941	Echo lost	Check parameter "DC value"	S	Warning [1)]
942	In safety distance	1. Check level 2. Check safety distance 3. Reset self holding	S	Warning [1)]
952	Foam detected	Check process conditions	S	Warning [1)]
968	Level limited	1. Check level 2. Check limit parameters	S	Warning

1) Diagnostic behavior can be changed.

11.7 Event logbook

11.7.1 Event history

The **"Event logbook" submenu** provides a chronological overview of the event messages that have occurred [3].

Navigation: Diagnostics → Event logbook

A maximum of 100 event messages can be displayed in chronological order.

The event history includes entries for:
- Diagnostic events
- Information events

In addition to the operating time when the event occurred, each event is also assigned a symbol that indicates whether the event has occurred or is finished:
- Diagnostic event
  - ⊖: Occurrence of the event
  - ⊖: End of the event
- Information event
  ⊖: Occurrence of the event

11.7.2 Filtering the event logbook

Filters can be used to determine which category of event messages is displayed in the **Event logbook** submenu.

Navigation: Diagnostics → Event logbook

Filter categories

- All
- Failure (F)
- Function check (C)
- Out of specification (S)
- Maintenance required (M)
- Information

11.7.3 Overview of information events

Info number	Info name
I1000	--------(Device ok)
I1079	Sensor changed
I1089	Power on
I1090	Configuration reset
I1091	Configuration changed
I11074	Device verification active
I1110	Write protection switch changed
I11104	Loop diagnostics
I1151	History reset
I1154	Reset terminal voltage min/max
I1155	Reset electronics temperature

3) If the device is operated via FieldCare, the event list can be displayed via the FieldCare "Event List" function.

Info number	Info name
I1157	Memory error event list
I1256	Display: access status changed
I1264	Safety sequence aborted
I1335	Firmware changed
I1397	Fieldbus: access status changed
I1398	CDI: access status changed
I1440	Main electronic module changed
I1444	Device verification passed
I1445	Device verification failed
I1461	Sensor verification failed
I1512	Download started
I1513	Download finished
I1514	Upload started
I1515	Upload finished
I1551	Assignment error fixed
I1552	Failed: Main electronic verification
I1554	Safety sequence started
I1555	Safety sequence confirmed
I1556	Safety mode off
I1956	Reset

11.8 Resetting the device

11.8.1 Reset via digital communication

The device can be reset with the **Device reset** parameter.

Navigation: System → Device management

Any customer-specific configuration carried out at the factory is not affected by a reset (customer-specific configuration remains).

11.8.2 Resetting the password via the operating tool

Enter a code to reset the current "Maintenance" password.
The code is delivered by your local support.

Navigation: System → User management → Reset password → Reset password

For details see the "Description of device parameters" documentation.

11.9 Device information

All device information is contained in the **Information** submenu.

Navigation: System → Information

For details see the "Description of device parameters" documentation.

11.10 Firmware history

11.10.1 Version

01.00.00
Initial software

12 Maintenance

No special maintenance work is required.

12.1 Exterior cleaning

Notes on cleaning
- The cleaning agents used should not corrode the surfaces and the seals
- Observe the degree of protection of the device

12.2 Seals

The process seals, located on the process connection of the device, should be replaced periodically. The interval between changes depends on the frequency of the cleaning cycles, the cleaning temperature and the medium temperature.

13 Repair

13.1 General information

13.1.1 Repair concept

The Endress+Hauser repair concept is devised in such a way that repairs can only be carried out through device replacement. Only the display can be replaced (see Spare parts section).

13.1.2 Replacing a device

After the device is replaced, previously saved parameters can be copied to the newly installed device.

After an entire device has been replaced, the parameters can be downloaded to the device again via the communication interface. The data must have been uploaded to the PC or the SmartBlue app beforehand using the "FieldCare/DeviceCare" software.

13.2 Spare parts

- Some replaceable device components are identified by a spare part nameplate. This contains information about the spare part.
- All the spare parts for the measuring device, along with the order code, are listed in the *Device Viewer* (www.endress.com/deviceviewer) and can be ordered. If available, users can also download the associated Installation Instructions.

Device serial number or QR code:
Located on the device and spare part nameplate.

13.3 Return

The requirements for safe device return can vary depending on the device type and national legislation.

1. Refer to the web page for information:
   https://www.endress.com/support/return-material
   ↳ Select the region.
2. If returning the device, pack the device in such a way that it is reliably protected against impact and external influences. The original packaging offers the best protection.

13.4 Disposal

If required by the Directive 2012/19/EU on waste electrical and electronic equipment (WEEE), the product is marked with the depicted symbol in order to minimize the disposal of WEEE as unsorted municipal waste. Do not dispose of products bearing this marking as unsorted municipal waste. Instead, return them to the manufacturer for disposal under the applicable conditions.

14 Accessories

Accessories currently available for the product can be selected via the Product Configurator at www.endress.com:

1. Select the product using the filters and search field.
2. Open the product page.
3. Select **Spare parts & Accessories**.

The accessories can be partially ordered via the "Accessory enclosed" product structure.

14.1 Weather protective cover

The weather protective cover can be ordered together with the device via the product structure "Accessory enclosed".

The sensor is not completely covered in the case of the 40 mm (1.5 in) antenna or the 80 mm (3 in) antenna.

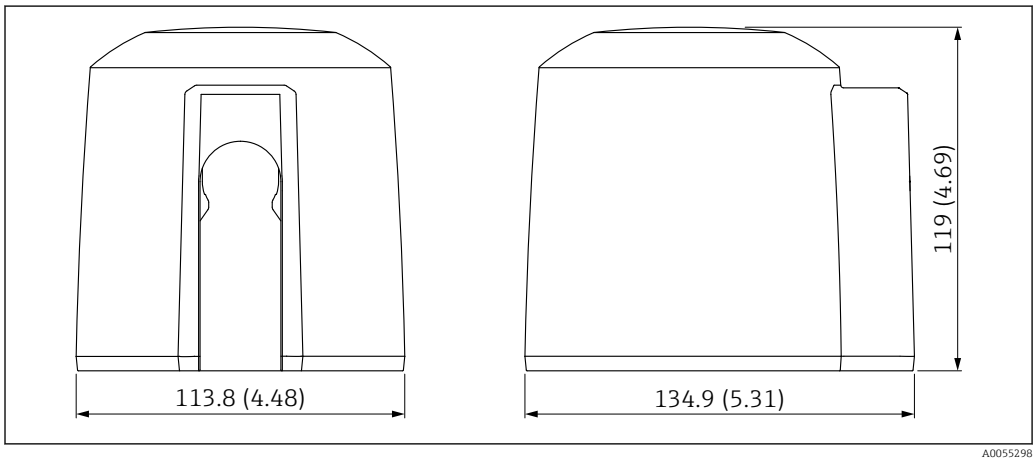

21 Dimensions for weather protective cover . Unit of measurement mm (in)

Material
PBT/PC

Order code
71662268

14.2 Securing nut G 1½"

Suitable for devices with G 1½" and MNPT 1½" process connection.

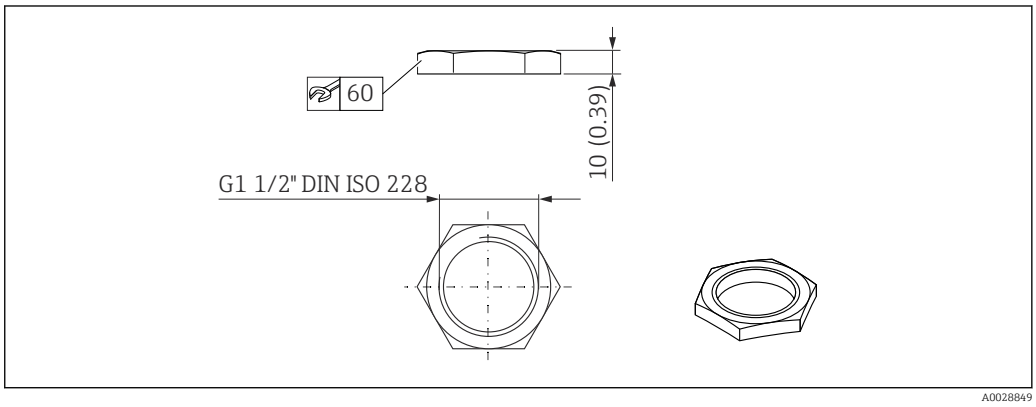

22 *Dimensions of securing nut. Unit of measurement mm (in)*

Material
PC

Order code
52014146

14.3 Securing nut G 2"

Suitable for devices with G 2" and MNPT 2" antenna end process connection.

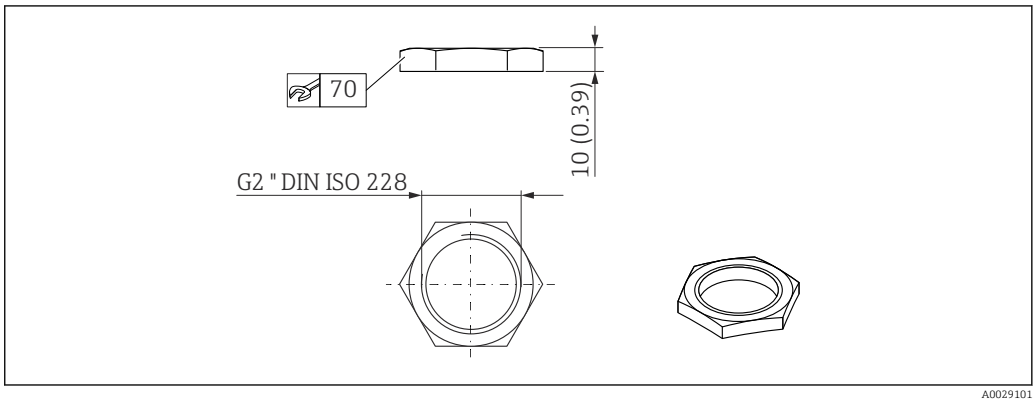

23 *Dimensions of securing nut. Unit of measurement mm (in)*

Material
PC

Order code
52000598

14.4 Uni adapter G 1½">G 2"

Temperature range −40 to 45 °C (−40 to 113 °F)

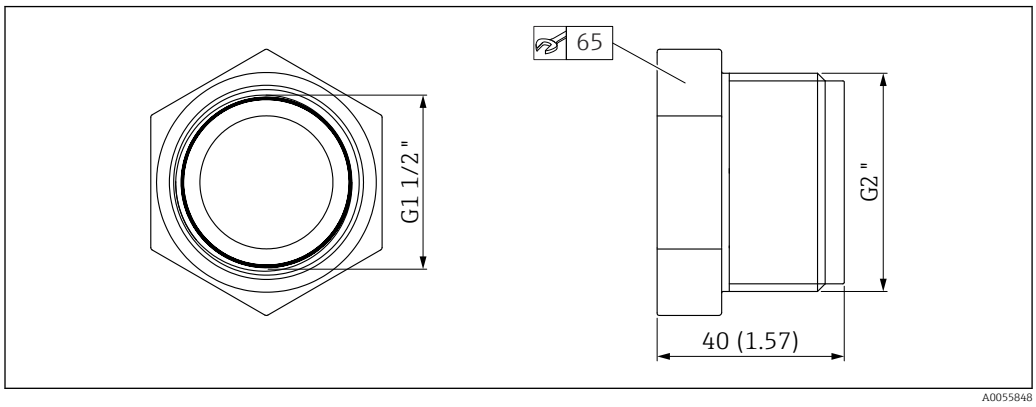

24 *Dimensions of Uni adapter*

Material
PVC

Order code
71662415

14.5 Uni adapter MNPT 1½" > MNPT 2"

Temperature range −40 to 65 °C (−40 to 150 °F)

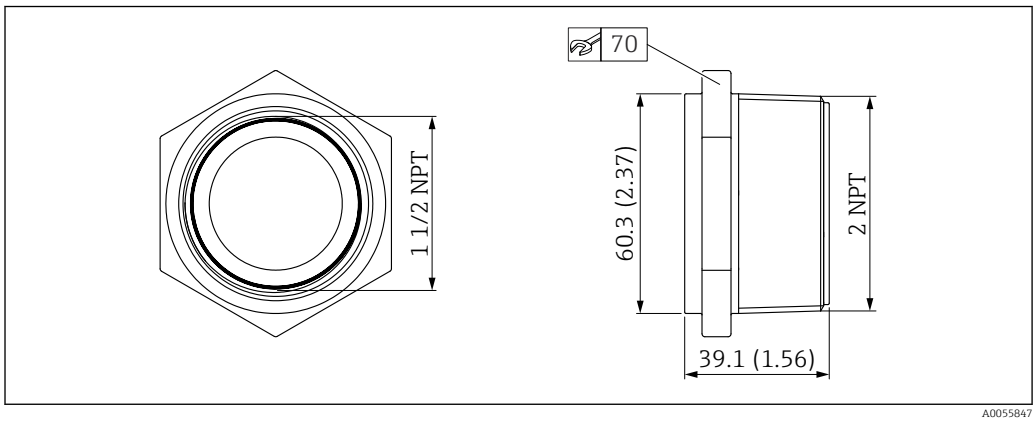

25 *Dimensions of Uni adapter*

Material
PP

Order code
71666515

14.6 Mounting bracket, adjustable, wall, 75 mm

The mounting bracket can be ordered together with the device via the product structure "Accessory enclosed".

14.6.1 Antenna end process connection G 1½"/NPT 1½"

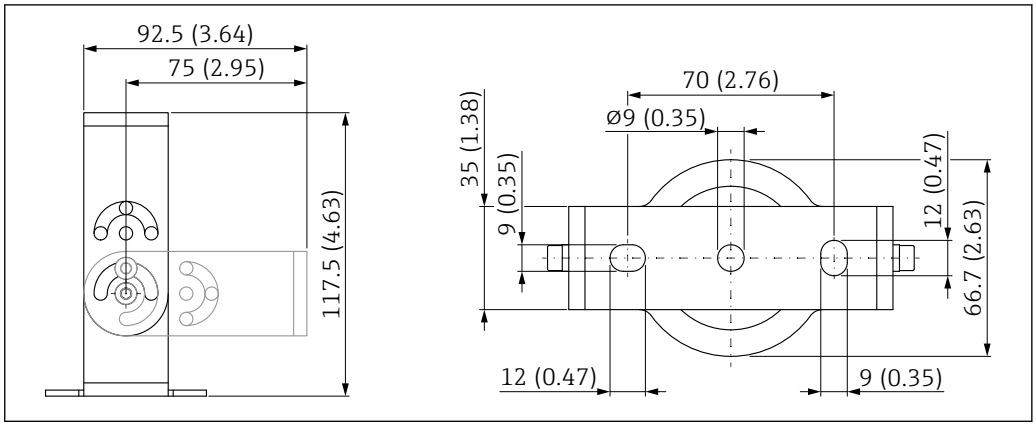

26 *Dimensions of mounting bracket. Unit of measurement mm (in)*

Consists of:
- 1 × mounting bracket, 316L (1.4404)
- 1 × angle bracket, 316L (1.4404)
- 3 × screws, A4
- 3 × securing disks, A4
- 1 × securing nut G 1½"

Order number (G 1½"/NPT 1½")
71662419

14.7 Mounting bracket, adjustable, wall, 200 mm

The mounting bracket can be ordered together with the device via the product structure "Accessory enclosed".

14.7.1 Antenna end process connection G 1½"/NPT 1½"

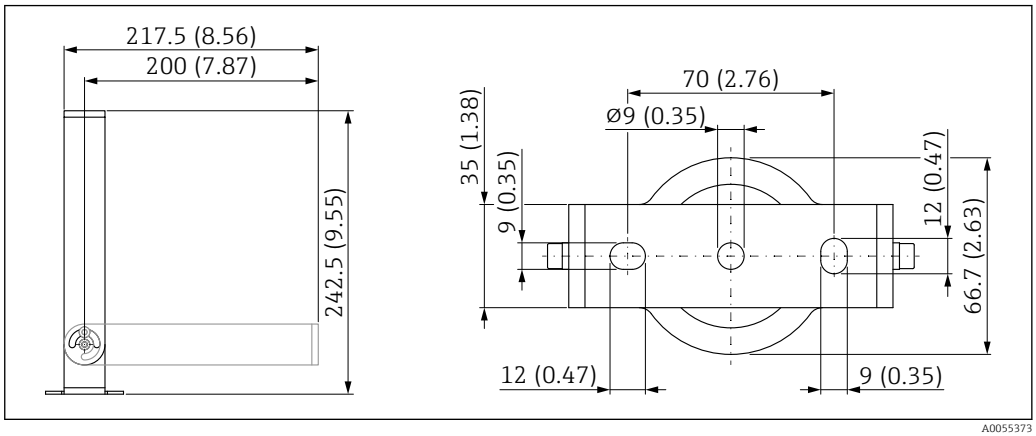

27 *Dimensions of mounting bracket. Unit of measurement mm (in)*

Consists of:
- 1 × mounting bracket, 316L (1.4404)
- 1 × angle bracket, 316L (1.4404)
- 3 × screws, A4
- 3 × securing disks, A4
- 1 × securing nut G 1½"

Order number (G 1½"/NPT 1½")
71662423

14.8 Angle bracket for wall mounting

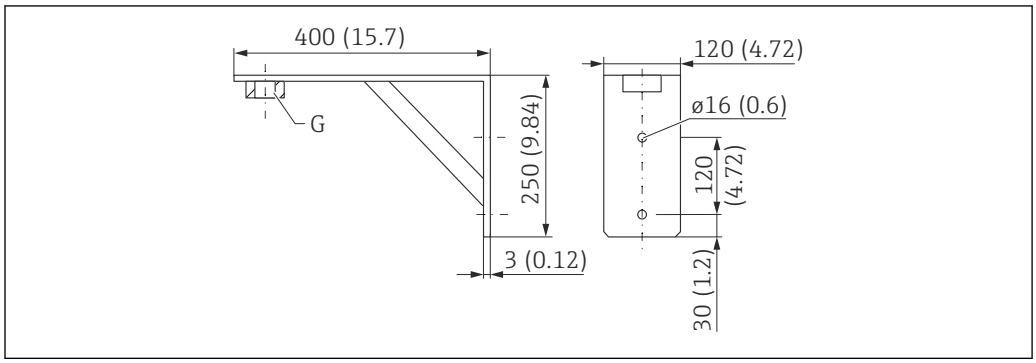

28 Dimensions of mounting bracket. Unit of measurement mm (in)

G Sensor connection in accordance with the product structure "Antenna end process connection"

Weight
3.4 kg (7.5 lb)

Material
316L (1.4404)

Order number for G 1½" process connection
71452324
Also suitable for MNPT 1½"

Order number for G 2" process connection
71452325
Also suitable for MNPT 2"

14.9 Cantilever, pivotable

14.9.1 Installation type sensor antenna end process connection

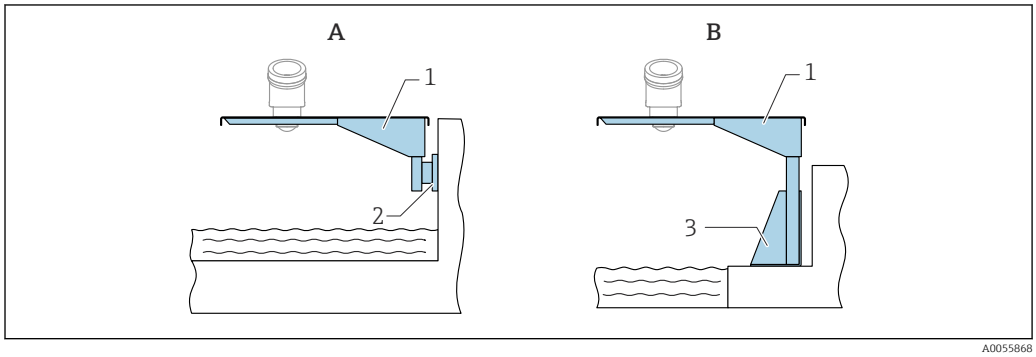

29 Installation type sensor antenna end process connection

A Installation with cantilever and wall bracket
B Installation with cantilever and mounting frame
1 Cantilever
2 Wall bracket
3 Mounting frame

500 mm cantilever with pivot, sensor antenna end process connection G 1½"

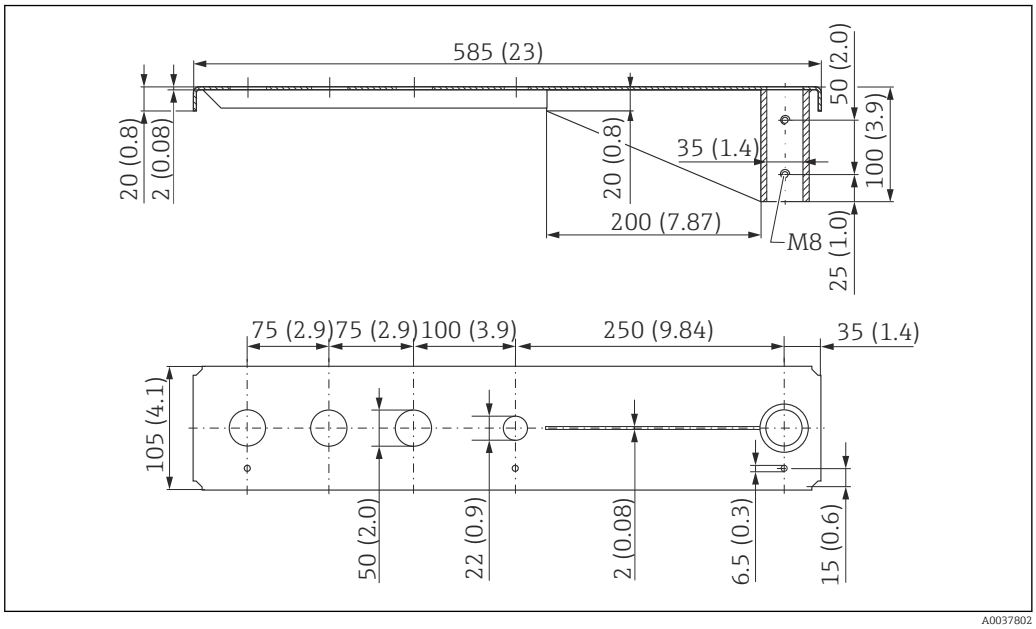

30 *Dimensions of 500 mm cantilever with pivot, for sensor antenna end process connection G 1½". Unit of measurement mm (in)*

Weight:
1.9 kg (4.19 lb)

Material
316L (1.4404)

Order number
71452318

- 50 mm (2.17 in) openings for all G 1½" or MNPT 1½" antenna end thread process connections
- 22 mm (0.87 in) opening can be used for any additional sensor
- Retaining screws are included in delivery

1 000 mm cantilever with pivot, sensor antenna end process connection G 1½"

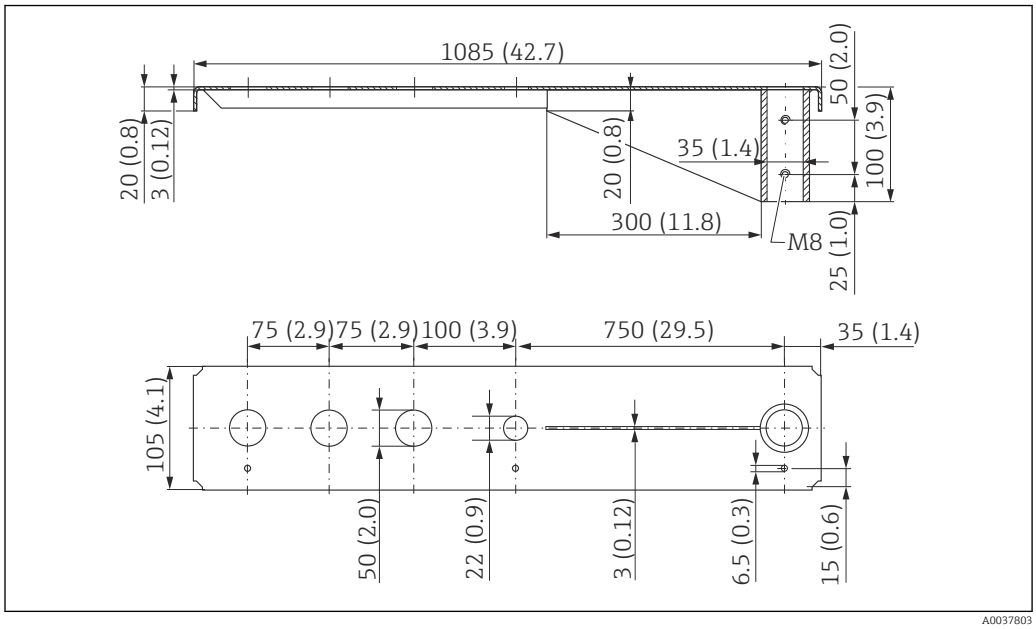

31 Dimensions of 1 000 mm cantilever with pivot, for sensor antenna end process connection G 1½". Unit of measurement mm (in)

Weight:
4.4 kg (9.7 lb)

Material
316L (1.4404)

Order code
71452319

- 50 mm (2.17 in) openings for all G 1½" or MNPT 1½" antenna end thread process connections
- 22 mm (0.87 in) opening can be used for any additional sensor
- Retaining screws are included in delivery

14.9.2 Mounting stand, 700 mm (27.6 in) for cantilever with pivot

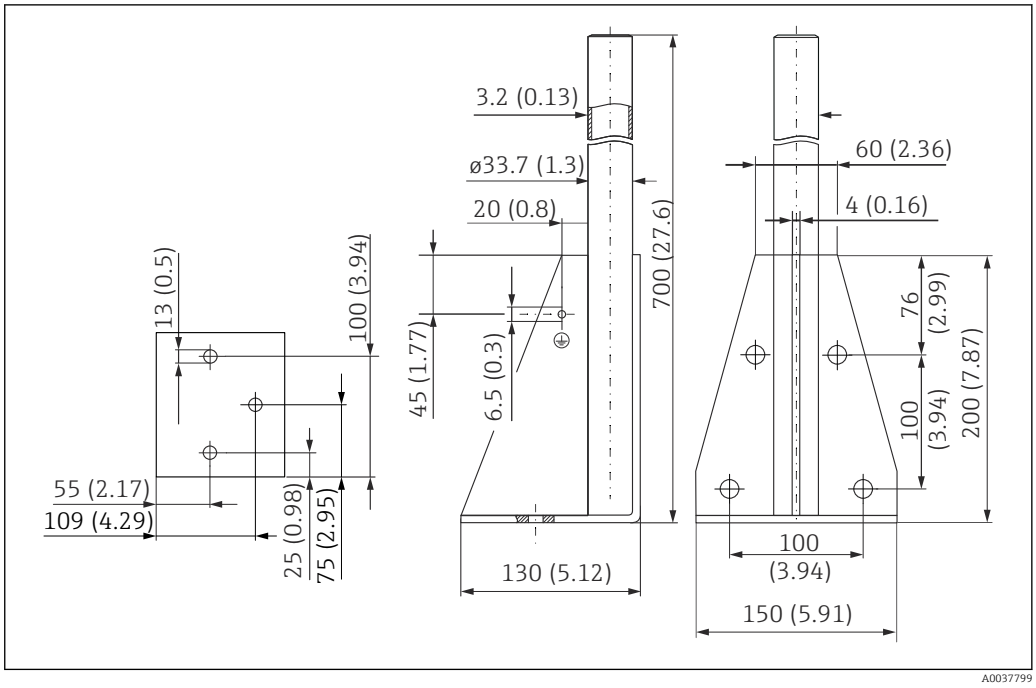

32 *Dimensions. Unit of measurement mm (in)*

Weight:
4.2 kg (9.26 lb)

Material
316L (1.4404)

Order number
71452327

14.9.3 Mounting stand, 1 400 mm (55.1 in) for cantilever with pivot

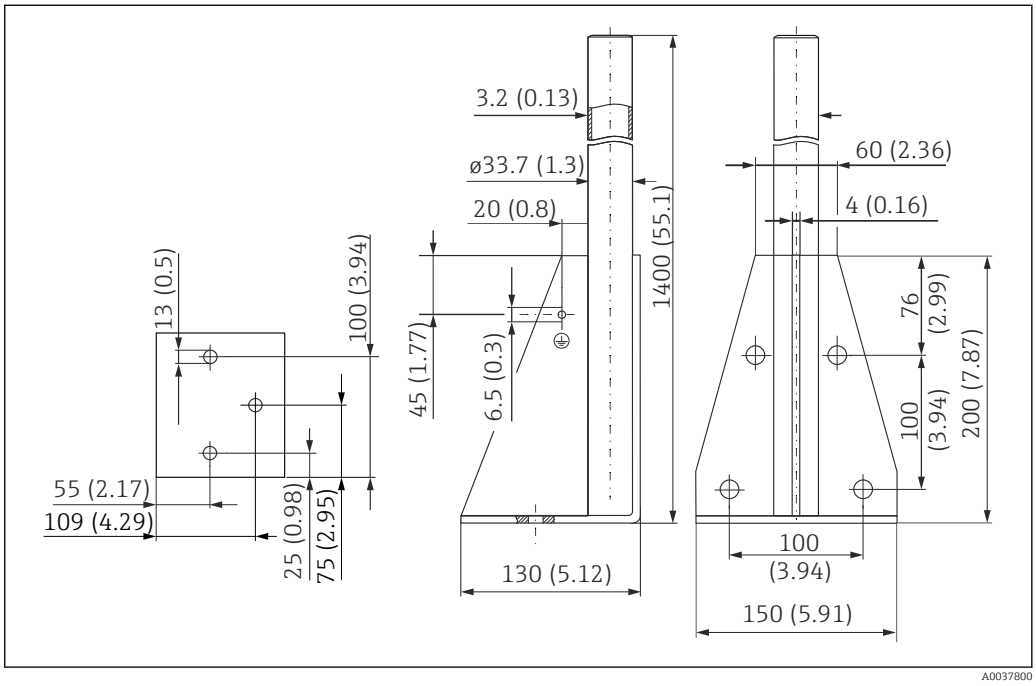

33 *Dimensions. Unit of measurement mm (in)*

Weight:
6 kg (13.23 lb)

Material
316L (1.4404)

Order number
71452326

14.9.4 Wall bracket for cantilever with pivot

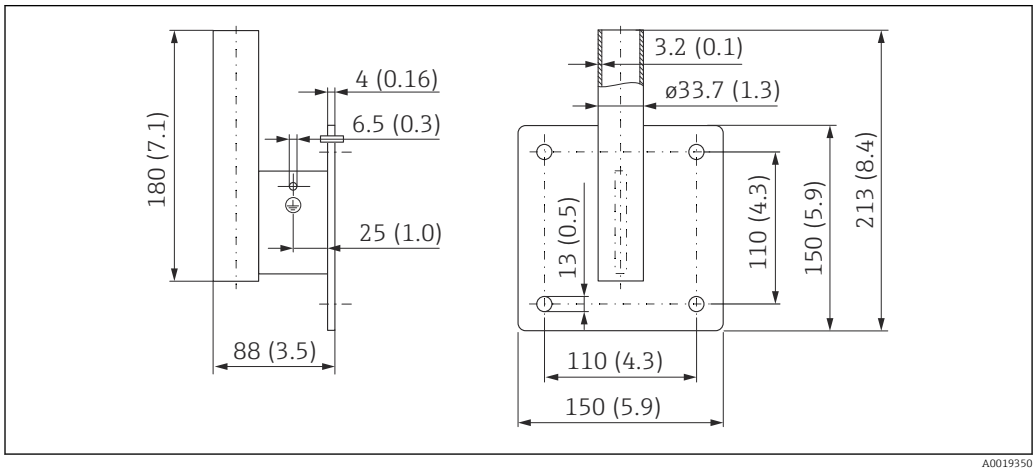

34 Dimensions of the wall bracket. Unit of measurement mm (in)

Weight
1.2 kg (2.65 lb)

Material
316L (1.4404)

Order number
71452323

14.10 UNI slip-on flange 3"/DN80/80, PP

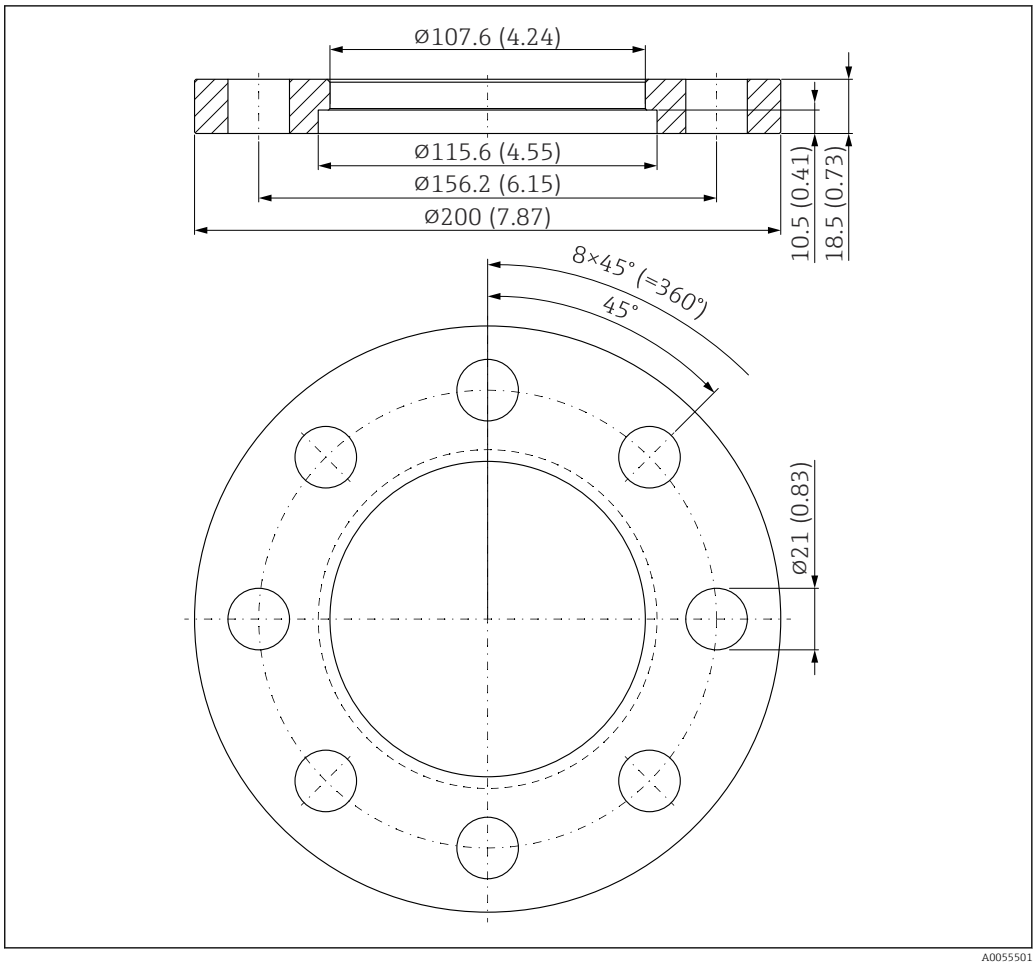

35 Dimensions of UNI slip-on flange 3"/DN80/80. Unit of measurement mm (in)

A Sensor connection in accordance with the product structure "Antenna end process connection; without; prepared for UNI slip-on flange > Accessories"

Material
PP

Order code
71162777

14.11 UNI slip-on flange 4"/DN100/100, PP

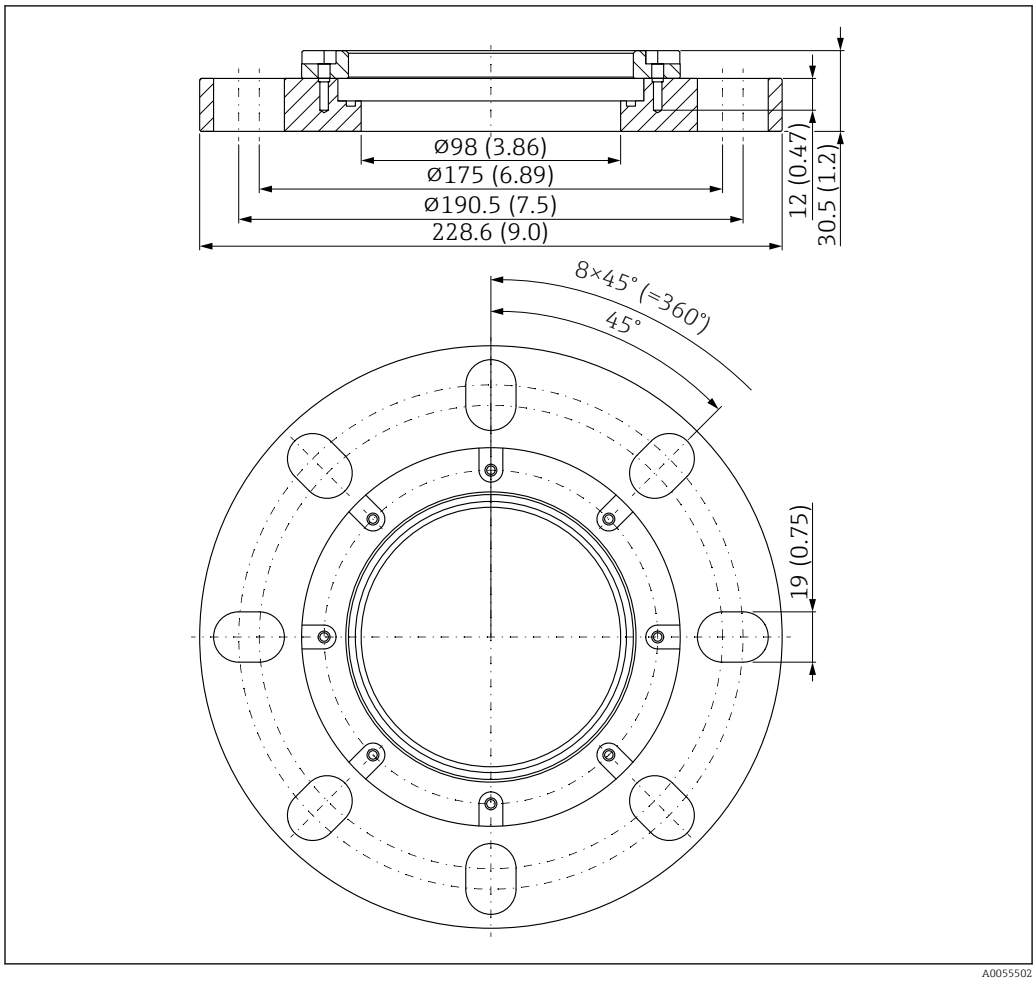

36 Dimensions of UNI slip-on flange 4"/DN100/100. Unit of measurement mm (in)

A Sensor connection in accordance with the product structure "Antenna end process connection; without; prepared for UNI slip-on flange > Accessories"

Material
PP

Order code
71162778

14.12 UNI slip-on flange 6"/DN150/150, PP

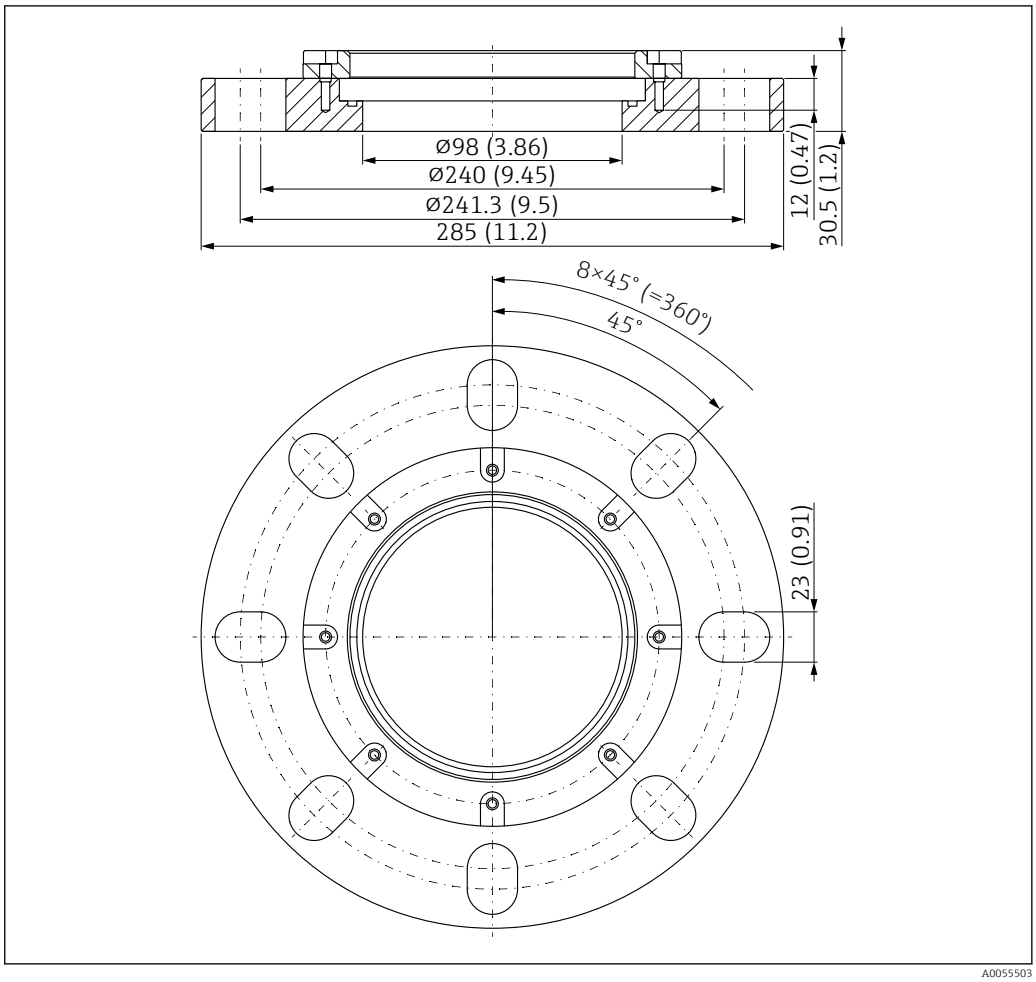

37 *Dimensions of UNI slip-on flange 6"/DN150/150. Unit of measurement mm (in)*

A *Sensor connection in accordance with the product structure "Antenna end process connection; without; prepared for UNI slip-on flange > Accessories"*

Material
PP

Order code
71162780

14.13 UNI flange 2"/DN50/50, PP

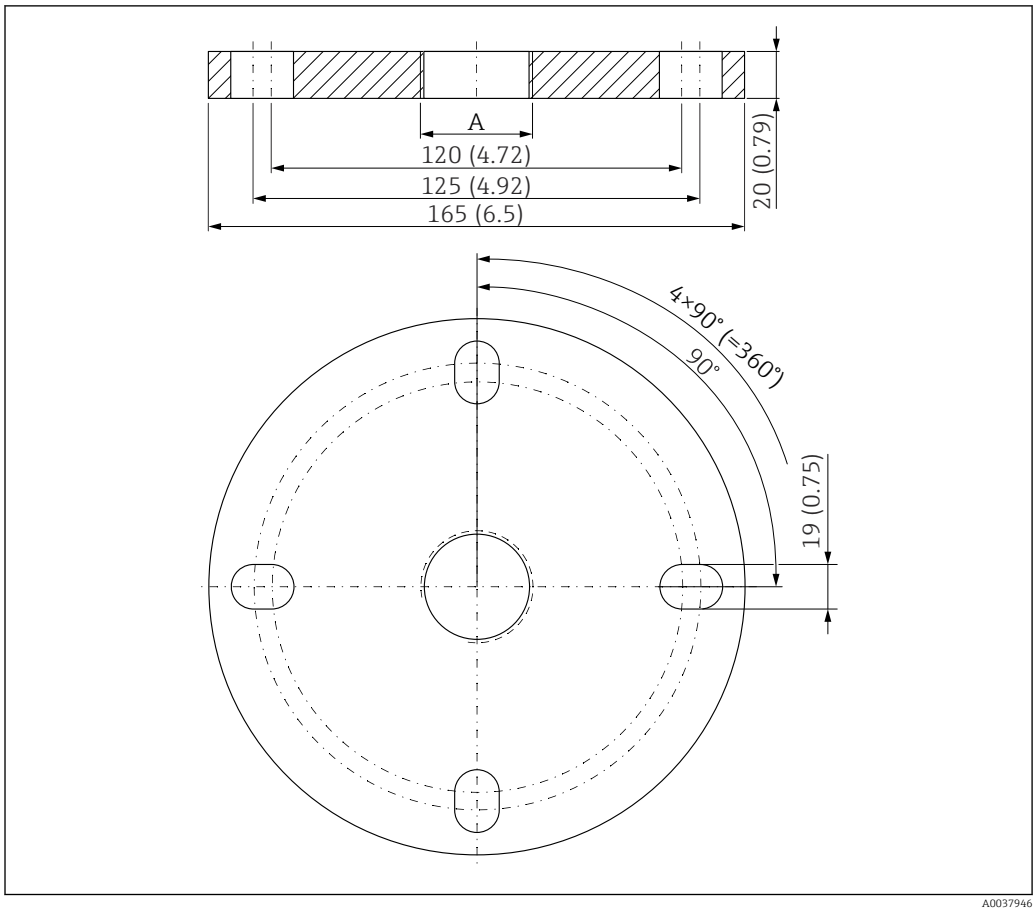

38 Dimensions of UNI flange 2"/DN50/50. Unit of measurement mm (in)

A Sensor connection in accordance with the product structure "Antenna end process connection"

Material
PP

Order code
FAX50-####

14.14 UNI flange 3"/DN80/80, PP

The UNI flange 3"/DN80/80 can be ordered together with the device via the product structure "Accessory enclosed".

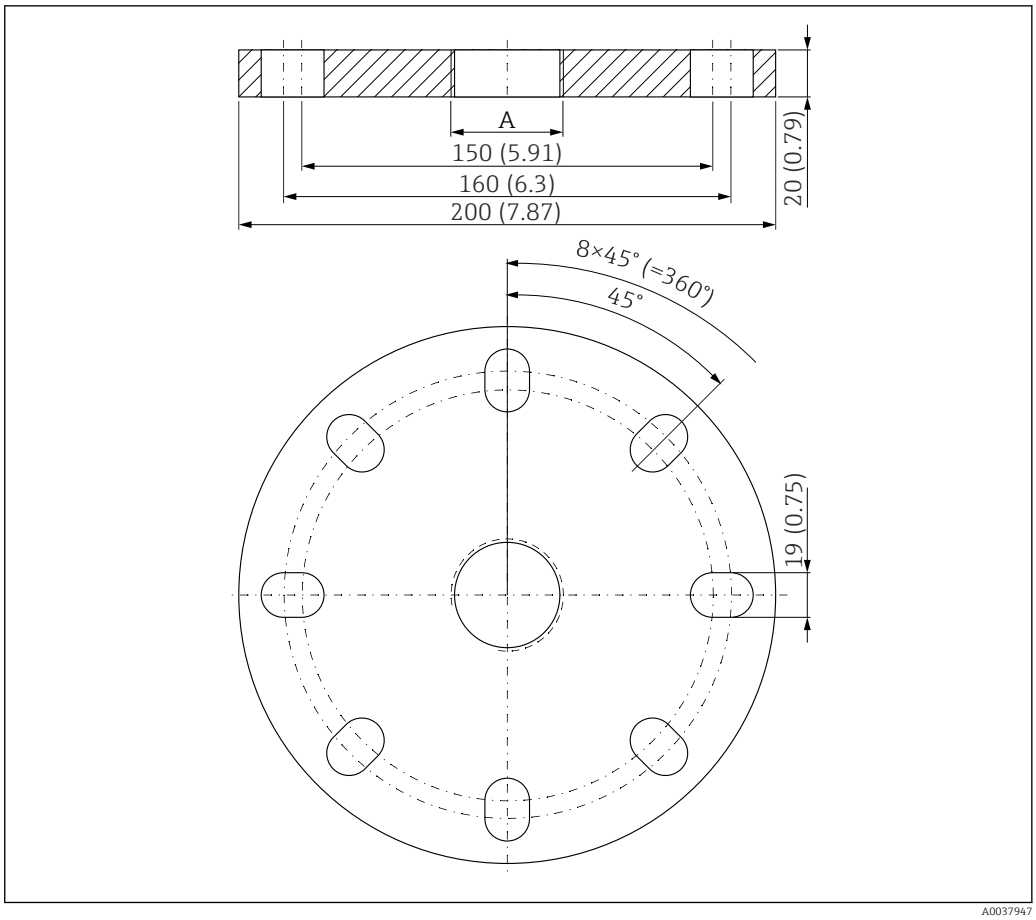

39 Dimensions of UNI flange 3"/DN80/80. Unit of measurement mm (in)

A Sensor connection in accordance with the product structure "Antenna end process connection"

Material
PP

Order code
FAX50-####

14.15 UNI flange 4"/DN100/100, PP

The UNI flange 4"/DN100/100 can be ordered together with the device via the product structure "Accessory enclosed".

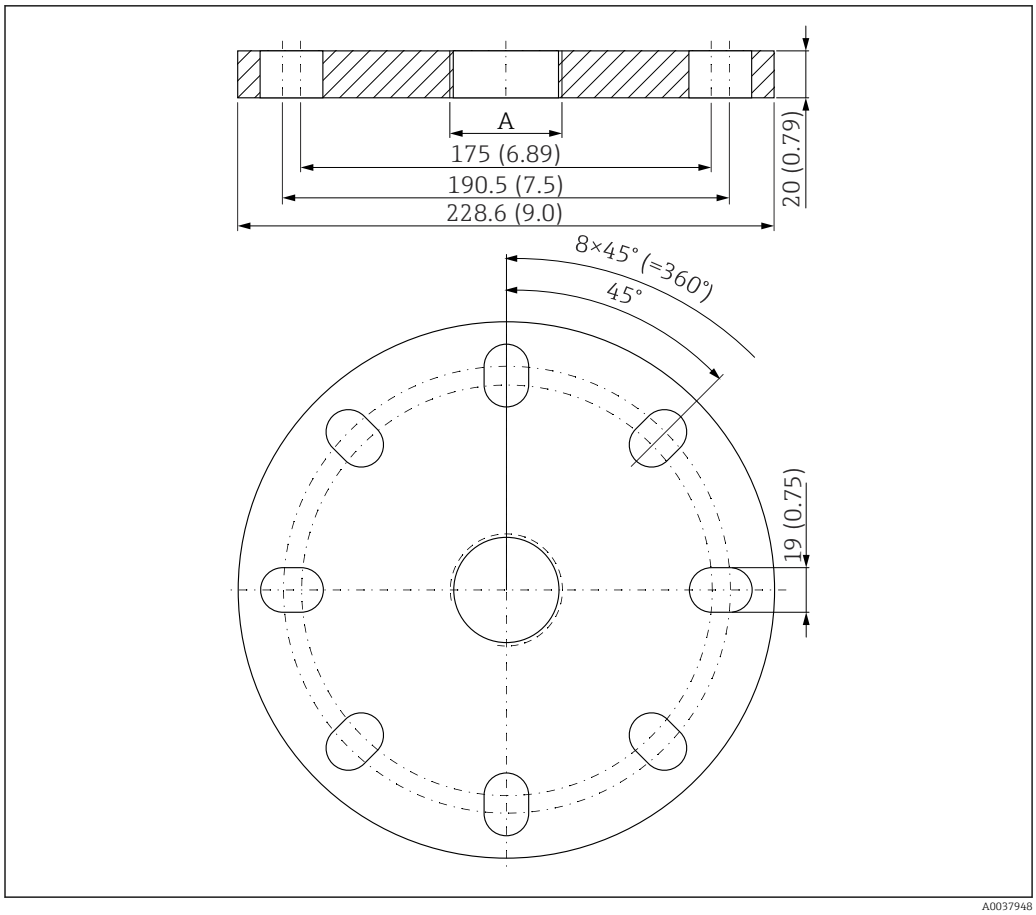

40 Dimensions of UNI flange 4"/DN100/100. Unit of measurement mm (in)

A Sensor connection in accordance with the product structure "Antenna end process connection"

Material
PP

Order code
FAX50-####

14.16 Adjustable flange seal

The adjustable flange seal is used to align the sensor.

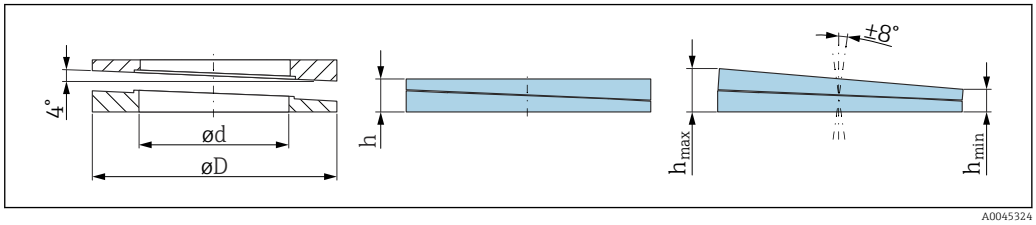

41 *Dimensions*

Technical data: version DN/JIS			
Order code	71074263	71074264	71074265
Compatible with	DN80 PN10/40	DN100 PN10/16	▪ DN150 PN10/16 ▪ JIS 10K 150A
Recommended screw length	100 mm (3.9 in)	100 mm (3.9 in)	110 mm (4.3 in)
Recommended screw size	M14	M14	M18
Material	EPDM		
Process pressure	−0.1 to 0.1 bar (−1.45 to 1.45 psi)		
Process temperature	−40 to +80 °C (−40 to +176 °F)		
D	142 mm (5.59 in)	162 mm (6.38 in)	218 mm (8.58 in)
d	89 mm (3.5 in)	115 mm (4.53 in)	169 mm (6.65 in)
h	22 mm (0.87 in)	23.5 mm (0.93 in)	26.5 mm (1.04 in)
h_{min}	14 mm (0.55 in)	14 mm (0.55 in)	14 mm (0.55 in)
h_{max}	30 mm (1.18 in)	33 mm (1.3 in)	39 mm (1.45 in)
Technical data: Version ASME/JIS			
Order code	71249070	71249072	71249073
Compatible with	▪ ASME 3" 150 lbs ▪ JIS 80A 10K	ASME 4" 150 lbs	ASME 6" 150 lbs
Recommended screw length	100 mm (3.9 in)	100 mm (3.9 in)	110 mm (4.3 in)
Recommended screw size	M14	M14	M18
Material	EPDM		
Process pressure	−0.1 to 0.1 bar (−1.45 to 1.45 psi)		
Process temperature	−40 to +80 °C (−40 to +176 °F)		
D	133 mm (5.2 in)	171 mm (6.7 in)	219 mm (8.6 in)
d	89 mm (3.5 in)	115 mm (4.53 in)	168 mm (6.6 in)
h	22 mm (0.87 in)	23.5 mm (0.93 in)	26.5 mm (1.04 in)
h_{min}	14 mm (0.55 in)	14 mm (0.55 in)	14 mm (0.55 in)
h_{max}	30 mm (1.18 in)	33 mm (1.3 in)	39 mm (1.45 in)

14.17 RIA15 in the field housing

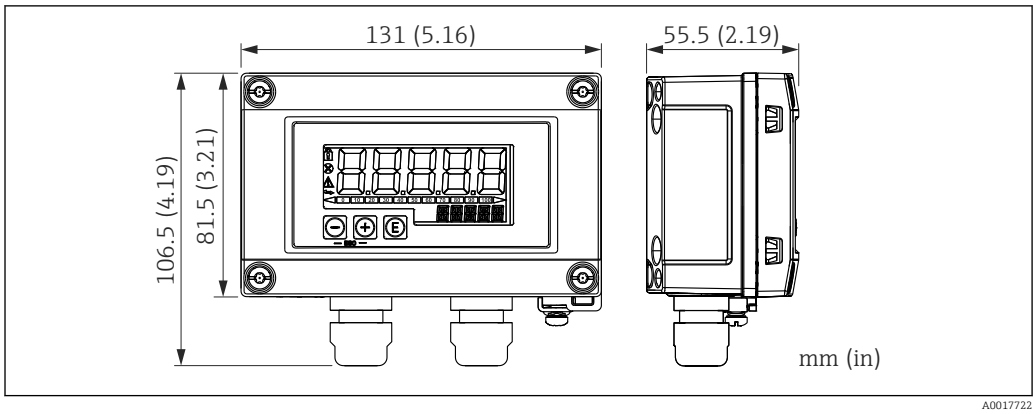

42 *Dimensions of RIA15 in the field housing. Unit of measurement mm (in)*

The remote display RIA15 can be ordered with or without operation via the product structure "Accessory enclosed".

Field housing material: Plastic (PBT with steel fibers, antistatic)

Other housing versions are available via the RIA15 product structure.

Alternatively available as an accessory, for details see Technical Information TI01043K and Operating Instructions BA01170K

14.18 HART communication resistor

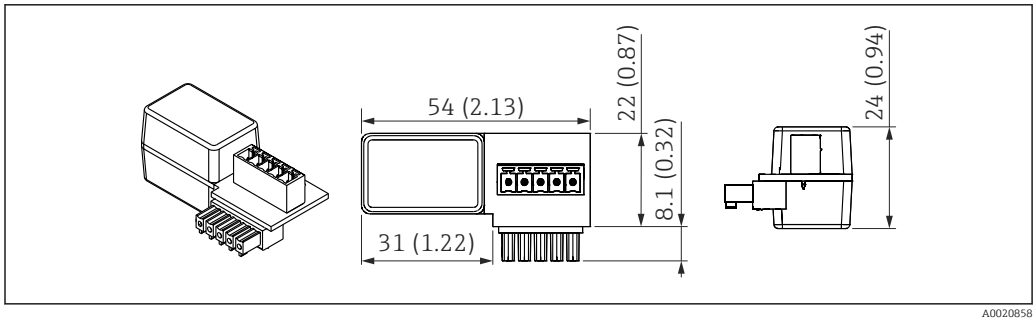

43 *Dimensions of HART communication resistor. Unit of measurement mm (in)*

The HART communication resistor is required for operation of the RIA15 and is supplied with "remote display RIA15, with operation via HART" when ordering.

Document Technical Information TI01043K and Operating Instructions BA01170K

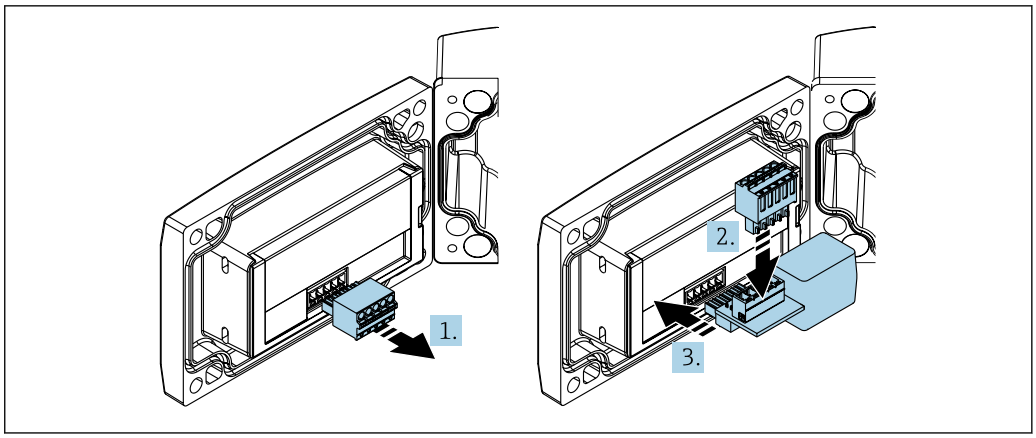

A0020844

In order to operate the RIA15, the HART communication resistor must be integrated.

1. Disconnect the plug-in terminal block.
2. Insert the terminal block into the slot provided on the HART communication resistor module.
3. Insert the HART communication resistor in the slot in the housing.

14.19 DeviceCare SFE100

Configuration tool for IO-Link, HART, PROFIBUS and FOUNDATION Fieldbusfield devices
DeviceCare is available for download free of charge at www.software-products.endress.com. You need to register in the Endress+Hauser software portal to download the application.

Technical Information TI01134S

14.20 FieldCare SFE500

FDT-based plant asset management tool
It can configure all intelligent field units in your system and helps you manage them. By using the status information, it is also a simple but effective way of checking their status and condition.

Technical Information TI00028S

14.21 Device Viewer

All the spare parts for the device, along with the order code, are listed in the *Device Viewer* (www.endress.com/deviceviewer).

14.22 Commubox FXA195 HART

For intrinsically safe HART communication with FieldCare via the USB interface

For details, see "Technical Information" TI00404F

14.23 RN22

Single or two-channel active barrier for safe electrical isolation of 4 to 20 mA standard signal circuits, HART transparent

Technical Information TI01515K and Operating Instructions BA02004K

14.24 RN42

Single-channel active barrier with wide-range power supply for safe electrical isolation of 4 to 20 mA standard signal circuits, HART transparent.

Technical Information TI01584K and Operating Instructions BA02090K

14.25 Field Xpert SMT70

Universal, high-performance tablet PC for device configuration in Ex Zone 2 and non-Ex areas

For details, see "Technical Information" TI01342S

14.26 Field Xpert SMT77

Universal, high-performance tablet PC for device configuration in Ex Zone 1 areas

For details, see "Technical Information" TI01418S

14.27 SmartBlue app

Mobile app for easy configuration of devices on site via Bluetooth wireless technology

14.28 RMA42

Digital process transmitter for monitoring and displaying analog measured values

For details, see Technical Information TI00150R and Operating Instructions BA00287R

15 Technical data

15.1 Input

15.1.1 Measured variable

The measured variable is the distance between the reference point and the product surface.

The level is calculated based on **E**, the empty distance entered.

15.1.2 Measuring range

The measuring range starts at the point where the beam hits the tank floor. Levels below this point cannot be measured, particularly in the case of spherical bases or conical outlets.

Maximum measuring range

The maximum measuring range depends on the antenna size.

Antenna	Maximum measuring range
40 mm (1.5 in)	20 m (65.6 ft)
80 mm (3 in)	30 m (98.4 ft)

Usable measuring range

The usable measuring range depends on the antenna size, the medium's reflective properties, the installation position and any possible interference reflections.

In principle, measurement is possible up to the tip of the antenna.

Depending on the position of the product (angle of repose for solids) and to avoid any material damage from corrosive or aggressive media or deposit buildup on the antenna, the end of the measuring range should be selected 10 mm (0.4 in) before the tip of the antenna.

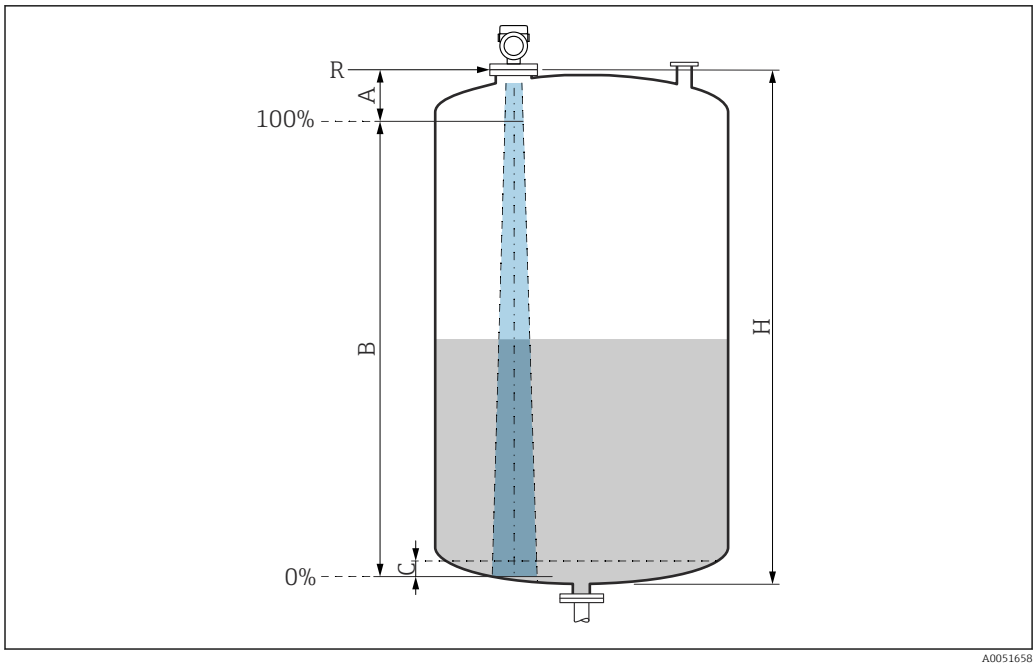

A Antenna tip + 10 mm (0.4 in)
B Usable measuring range
C 50 to 80 mm (1.97 to 3.15 in); Medium ε_r ≤2
H Vessel height
R Reference point of the measurement, varies depending on the antenna system (see section on Mechanical construction)

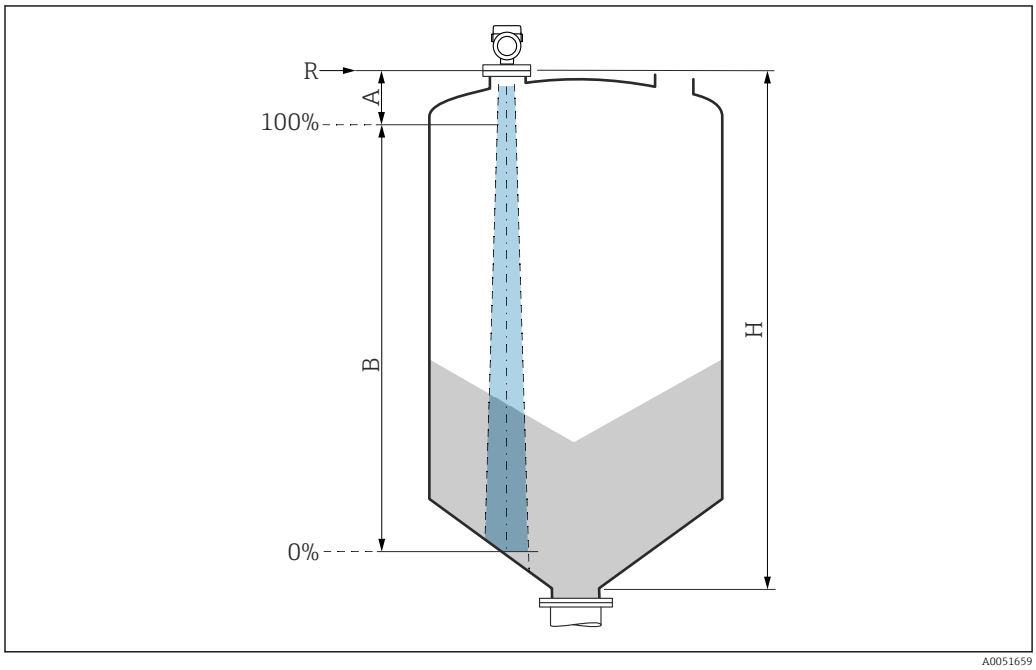

A Antenna tip + 10 mm (0.4 in)
B Usable measuring range
H Vessel height
R Reference point of the measurement, varies depending on the antenna system (see section on Mechanical construction)

In the case of media with a low dielectric constant ε_r <2, the tank bottom may be visible through the medium when levels are very low (less than level C). Reduced accuracy must be expected in this range. If this is not acceptable, the zero point should be positioned at a distance C above the tank bottom for these applications (see figure).

The media groups and the possible measuring range are described as a function of the application and media group in the following section. If the relative permittivity of the medium is not known, to ensure a reliable measurement assume the medium belongs to group B.

Media groups

- **A** (ε_r 1.4 to 1.9)
  Non-conductive liquids, e.g. liquefied gas
- **B** (ε_r 1.9 to 4)
  Non-conductive liquids, e.g. gasoline, oil, toluene, etc.
- **C** (ε_r 4 to 10)
  e.g. concentrated acid, organic solvents, ester, aniline, etc.
- **D** (ε_r >10)
  Conductive liquids, aqueous solutions, diluted acids, bases and alcohol

For the relative permittivity values (ε_r values) of many media commonly used in industry, please refer to:
- Relative permittivity (ε_r value), Compendium CP01076F
- The Endress+Hauser "DC Values app" (available for Android and iOS)

Measurement in storage vessel

Storage vessel - measuring conditions
Calm medium surface (e.g. bottom filling, filling via immersion tube or rare filling from above)

40 mm (1.5 in) antenna in storage vessel

	Media group	Measuring range
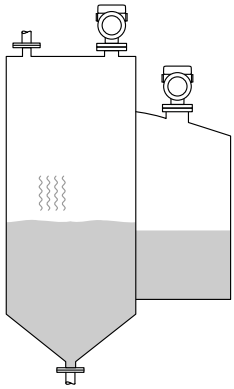	**A** (ε_r 1.4 to 1.9)	10 m (33 ft)
	B (ε_r 1.9 to 4)	20 m (65.6 ft)
	C (ε_r 4 to 10)	20 m (65.6 ft)
	D (ε_r >10)	20 m (65.6 ft)

80 mm (3 in) antenna in storage vessel

	Media group	Measuring range
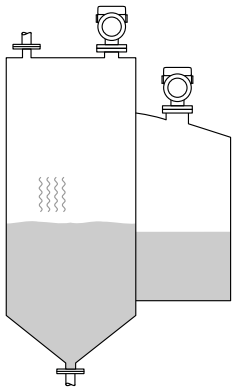	**A** (ε_r 1.4 to 1.9)	12 m (39 ft)
	B (ε_r 1.9 to 4)	23 m (75 ft)
	C (ε_r 4 to 10)	30 m (98 ft)
	D (ε_r >10)	30 m (98 ft)

Measurement in buffer vessel

Buffer vessel - measuring conditions
Moving medium surface (e.g. permanent free filling from above, mixing jets)

40 mm (1.5 in) antenna in buffer vessel

	Media group	Measuring range
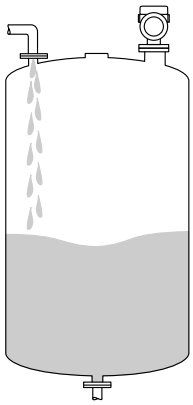	**A** (ε_r 1.4 to 1.9)	7 m (23 ft)
	B (ε_r 1.9 to 4)	13 m (43 ft)
	C (ε_r 4 to 10)	20 m (65.6 ft)
	D (ε_r >10)	20 m (65.6 ft)

80 mm (3 in) antenna in buffer vessel

	Media group	Measuring range
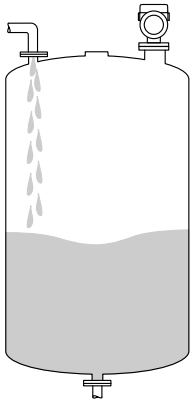	**A** (ε_r 1.4 to 1.9)	7.5 m (25 ft)
	B (ε_r 1.9 to 4)	15 m (49 ft)
	C (ε_r 4 to 10)	28 m (92 ft)
	D (ε_r >10)	30 m (98 ft)

Measurement in vessel with agitator

Vessel with agitator - measuring conditions
Turbulent medium surface (e.g. from filling from above, stirrers and baffles)

40 mm (1.5 in) antenna in vessel with agitator

	Media group	Measuring range
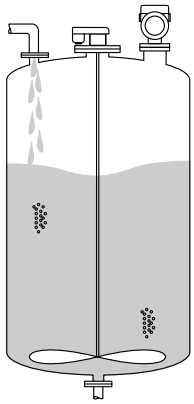	**A** (ε_r 1.4 to 1.9)	4 m (13 ft)
	B (ε_r 1.9 to 4)	5 m (16.4 ft)
	C (ε_r 4 to 10)	13 m (43 ft)
	D (ε_r >10)	20 m (65.6 ft)

80 mm (3 in) antenna in vessel with agitator

	Media group	Measuring range
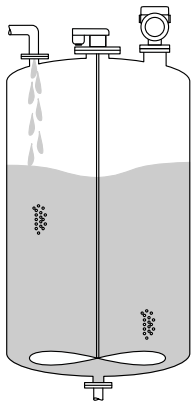	**A** (ε_r 1.4 to 1.9)	4 m (13 ft)
	B (ε_r 1.9 to 4)	7 m (23 ft)
	C (ε_r 4 to 10)	15 m (49 ft)
	D (ε_r >10)	25 m (82 ft)

15.1.3 Operating frequency

approx. 80 GHz

Up to eight devices can be installed in a tank without the devices mutually influencing one another.

15.1.4 Transmission power

- Peak power: <1.5 mW
- Average output power: <70 µW

15.2 Output

15.2.1 Output signal

- 4 to 20 mA with superimposed digital communication protocol HART, 2-wire
- The current output offers a choice of three different operating modes:
  - 4 to 20.5 mA
  - NAMUR NE 43: 3.8 to 20.5 mA (factory setting)
  - US mode: 3.9 to 20.5 mA

15.2.2 Signal on alarm for devices with current output

Current output
Signal on alarm in accordance with NAMUR recommendation NE 43.
- Max. alarm: can be set from 21.5 to 23 mA
- Min. alarm: < 3.6 mA (factory setting)

Onsite display and operating tool via digital communication
Status signal (according to NAMUR Recommendation NE 107):
Plain text display

15.2.3 Load

In order to guarantee sufficient terminal voltage, a maximum load resistance R_L (including line resistance) must not be exceeded, depending on the supply voltage U of the supply unit.

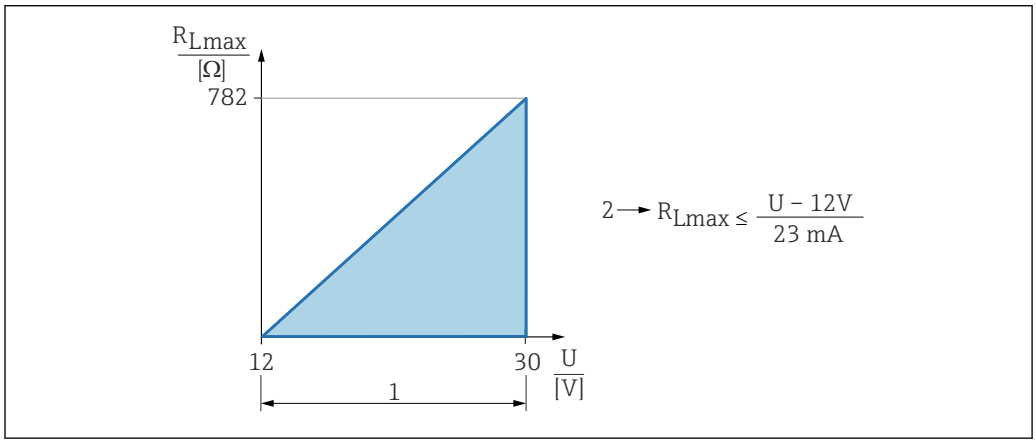

1 Power supply 12 to 30 V
2 R_{Lmax} maximum load resistance
U Supply voltage

If load is too great:
- Failure current is indicated and error message is displayed (indication: MIN alarm current)
- Periodic checking to establish if it is possible to quit fault state

Operation via handheld terminal or PC with operating program: take minimum communication resistor of 250 Ω into consideration.

15.2.4 Damping

Damping affects all continuous outputs.
Factory setting: 0 s(can be set from 0 to 999 s)

15.2.5 Ex connection data

See the separate technical documentation (Safety Instructions (XA)) on www.endress.com/download.

15.2.6 Linearization

The linearization function of the device allows the conversion of the measured value into any unit of length, weight, flow or volume.

Pre-programmed linearization curves

Linearization tables for calculating the volume in the following vessels are pre-programmed into the device:
- Pyramid bottom
- Conical bottom
- Angled bottom
- Horizontal cylinder
- Sphere

Linearization tables for calculating the flow rate are pre-programmed into the device and include the following:
- Flumes
  - Khafagi-Venturi flume
  - Venturi flume
  - Parshall flume
  - Palmer-Bowlus flume
  - Trapezoidal flume (ISO 4359)
  - Rectangular flume (ISO 4359)
  - U-shaped flume (ISO 4359)
- Weirs
  - Trapezoidal weir
  - Rectangular broad-crested weir (ISO 3846)
  - Rectangular thin-plate weir (ISO 1438)
  - Triangular thin-plate weir (ISO 1438)
- Standard formula

Other linearization tables of up to 32 value pairs can be entered manually.

15.2.7 Totalizer

The device offers a totalizer which adds up the flow rate. The totalizer cannot be reset.

15.2.8 Protocol-specific data

Manufacturer ID:
17(0x0011)

Device type ID:
0x11DE

Device revision:
1

HART specification:
7.6

DD version:
1

Device description files (DTM, DD)
Information and files available at:
- www.endress.com
  On the product page for the device: Documents/Software → Device drivers
- www.fieldcommgroup.org

HART load:
Min. 250 Ω

The following measured values are assigned to the device variables at the factory:

Device variable	Measured value
Primary variable (PV) [1]	Level linearized
Secondary variable (SV)	Distance

Device variable	Measured value
Tertiary variable (TV)	Absolute echo amplitude
Quaternary variable (QV)	Relative echo amplitude

1) The PV is always applied to the current output.

Choice of HART device variables
- Level linearized
- Distance
- Electronics temperature
- Sensor temperature
- Absolute echo amplitude
- Relative echo amplitude
- Area of incoupling
- Percent of range
- Loop current
- Flow
- Totalizer value
- Not used

Supported functions
- Burst mode
- Additional transmitter status
- Device locking

15.3 Environment

15.3.1 Ambient temperature range

Measuring instrument: −40 to +80 °C (−40 to +176 °F)

If operating outdoors in strong sunlight:
- Mount the device in the shade.
- Avoid direct sunlight, particularly in warmer climatic regions.
- Use a weather protective cover.

15.3.2 Storage temperature

−40 to +80 °C (−40 to +176 °F)

15.3.3 Climate class

According to IEC 60068-2-38 test Z/AD (relative humidity 4 to 100 %).

15.3.4 Operating height

Up to 5 000 m (16 404 ft) above sea level

15.3.5 Degree of protection

Test as per IEC 60529 Edition 2.2 2013-08/DIN EN 60529 2014-09 and NEMA 250-2014:
- IP66, NEMA Type 4X
- IP67

15.3.6 Vibration resistance

- Stochastic noise (random sweep) as per DIN EN 60068-2-64 Case 2/ IEC 60068-2-64 Case 2
- Guaranteed for 5 to 2 000 Hz: 1.25 $(m/s^2)^2$/Hz, ~ 5 g

15.3.7 Electromagnetic compatibility (EMC)

- Electromagnetic compatibility as per EN 61326 series and NAMUR recommendation EMC (NE21)
- Maximum measured error during EMC testing: < 0.5 % of the span.

For more details, refer to the EU Declaration of Conformity (www.endress.com/downloads).

15.4 Process

15.4.1 Process temperature, process pressure

WARNING

The maximum pressure for the device depends on the lowest-rated component with regard to pressure (components are: process connection, optional mounted parts or accessories).

- Only operate the device within the specified limits for the components!
- MWP (Maximum Working Pressure): The MWP is specified on the nameplate. This value refers to a reference temperature of +20 °C (+68 °F) and may be applied to the device for an unlimited time. Note temperature dependence of MWP. For flanges, refer to the following standards for the permitted pressure values at higher temperatures: EN 1092-1 (with regard to their stability/temperature property, the materials 1.4435 and 1.4404 are grouped together under EN 1092-1; the chemical composition of the two materials can be identical), ASME B16.5, JIS B2220 (the latest version of the standard applies in each case). MWP data that deviate from this are provided in the relevant sections of the Technical Information.
- The Pressure Equipment Directive (2014/68/EU) uses the abbreviation **PS** . This corresponds to the maximum working pressure (MWP) of the device.

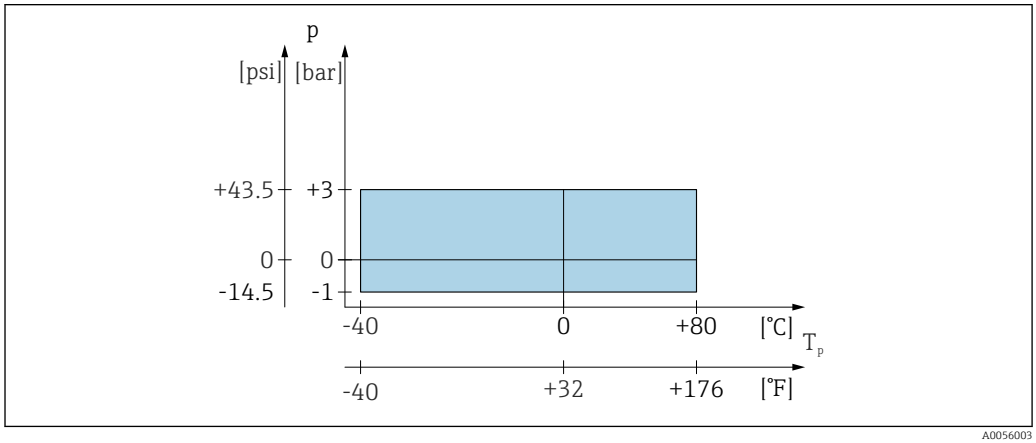

44 *Permitted range for process temperature and process pressure*

Process temperature range
−40 to +80 °C (−40 to +176 °F)

Process pressure range, 40 mm (1.5 in) antenna
- p_{gauge} = −1 to 3 bar (−14.5 to 43.5 psi)
- p_{abs} < =4 bar (58 psi)

Process pressure range, 80 mm (3 in) antenna with UNI slip-on flange 3", 4"
- p_{gauge} = −1 to 1 bar (−14.5 to 14.5 psi)
- p_{abs} < =2 bar (29 psi)

Process pressure range, 80 mm (3 in) antenna with UNI slip-on flange 6"
For unpressurized applications

The pressure range may be further restricted in the case of a CRN approval.

15.4.2 Relative permittivity

For liquids

- $\varepsilon_r \geq 1.8$
- Contact Endress+Hauser for lower ε_r values

For bulk solids

$\varepsilon_r \geq 1.6$

For applications with a lower relative permittivity than indicated, contact Endress+Hauser.

For the relative permittivity values (ε_r values) of many media commonly used in industry, please refer to:
- Relative permittivity (ε_r value), Compendium CP01076F
- The Endress+Hauser "DC Values app" (available for Android and iOS)

15.5 Additional technical data

Current Technical Information: Endress+Hauser website: www.endress.com → Downloads.

Index

A
Access authorization to parameters
  Read access . . . 22
  Write access . . . 22
Access code . . . 22
  Incorrect input . . . 22
Application . . . 7

B
Bluetooth® wireless technology . . . 24

C
CE mark . . . 8
Cleaning . . . 45
Configuration of a flow measurement . . . 32

D
Declaration of Conformity . . . 8
Device locking, status . . . 34
Device replacement . . . 45
Device Viewer . . . 45
DeviceCare . . . 25
Diagnostic event . . . 38
  In the operating tool . . . 39
Diagnostic events . . . 38
Diagnostic list . . . 39
Diagnostic message . . . 38
Diagnostics
  Symbols . . . 38
Display values
  For locking status . . . 34
Disposal . . . 46
Document
  Function . . . 5
Document function . . . 5

E
Event history . . . 42
Event list . . . 42
Event text . . . 38
Exterior cleaning . . . 45

F
Field of application
  Residual risks . . . 8
FieldCare . . . 24
  Function . . . 24
Filtering the event logbook . . . 42
Flow measurement configuration . . . 32
FV (HART variable) . . . 26

H
HART variables . . . 26

I
Intended use . . . 7

M
Media . . . 7

N
Nameplate . . . 11

O
Onsite display
  see Diagnostic message
  see In alarm condition
Operational safety . . . 8

P
Post-connection check . . . 21
Product security . . . 8
PV (HART variable) . . . 26

R
Read access . . . 22
Reading off measured values . . . 35
Repair concept . . . 45
Replacing a device . . . 45
Requirements for personnel . . . 7
Return . . . 46

S
Settings
  Adapting the device to process conditions . . . 35
Spare parts . . . 45
  Nameplate . . . 45
Status signals . . . 38
Submenu
  Event list . . . 42
SV (HART variable) . . . 26

T
Troubleshooting . . . 36
TV (HART variable) . . . 26

U
Use of measuring instrument
  see Intended use
Use of the measuring devices
  Borderline cases . . . 8
  Incorrect use . . . 8

W
Workplace safety . . . 8
Write access . . . 22

71670078

www.addresses.endress.com

Endress+Hauser

People for Process Automation