Technical Information
Micropilot FMR60B HART

Free space radar

Level measurement in liquids

Application

- Continuous, non-contact level measurement of liquids, pastes and sludges
- Process connections: Thread or mounting bracket
- Maximum measuring range: 50 m (164 ft)
- Temperature: −40 to +200 °C (−40 to +392 °F)
- Pressure: −1 to +20 bar (−14.5 to +290 psi)
- Accuracy: ±1 mm (±0.04 in)

Your benefits

- PVDF, PTFE Drip-off or PEEK antenna for small process connections
- Reliable measurement thanks to very good signal focusing, even with small process connections
- Easy, guided commissioning with intuitive user interface
- *Bluetooth*®wireless technology for commissioning, operation and maintenance
- SIL2 as per IEC 61508, SIL3 for homogeneous redundancy
- Easy guided proof testing for SIL and WHG

Endress+Hauser
People for Process Automation

Table of contents

Important document information . . . 4
Symbols . . . 4
Graphic conventions . . . 5

Function and system design . . . 5
Measuring principle . . . 5

Input . . . 6
Measured variable . . . 6
Measuring range . . . 6
Operating frequency . . . 11
Transmission power . . . 11

Output . . . 11
Output signal . . . 11
Signal on alarm . . . 12
Linearization . . . 12
Load . . . 12
Protocol-specific data . . . 12
Wireless HART data . . . 13

Power supply . . . 14
Terminal assignment . . . 14
Terminals . . . 15
Available device plugs . . . 15
Supply voltage . . . 16
Potential equalization . . . 16
Cable entries . . . 17
Cable specification . . . 17
Overvoltage protection . . . 17

Performance characteristics . . . 18
Reference operating conditions . . . 18
Maximum measured error . . . 18
Measured value resolution . . . 18
Response time . . . 18
Influence of ambient temperature . . . 19
Influence of gas phase . . . 19

Mounting . . . 20
Mounting location . . . 20
Orientation . . . 20
Installation instructions . . . 21
Beam angle . . . 23
Special mounting instructions . . . 25

Environment . . . 26
Ambient temperature range . . . 26
Ambient temperature limits . . . 26
Storage temperature . . . 34
Climate class . . . 34
Installation height as per IEC61010-1 Ed.3 . . . 34
Degree of protection . . . 34
Vibration resistance . . . 34
Electromagnetic compatibility (EMC) . . . 34

Process . . . 35
Process pressure range . . . 35
Dielectric constant . . . 36

Mechanical construction . . . 37
Dimensions . . . 37
Weight . . . 47
Materials . . . 48

Operability . . . 50
Operating concept . . . 50
Languages . . . 50
Local operation . . . 51
Local display . . . 51
Remote operation . . . 52
System integration . . . 52
Supported operating tools . . . 52
HistoROM data management . . . 52

Certificates and approvals . . . 52
CE mark . . . 52
RoHS . . . 52
RCM marking . . . 52
Ex approvals . . . 52
Functional safety . . . 53
Pressure equipment with allowable pressure
≤ 200 bar (2 900 psi) . . . 53
EN 302729 radio standard . . . 53
EN 302372 radio standard . . . 54
FCC . . . 54
Industry Canada . . . 54
Other standards and guidelines . . . 55

Ordering information . . . 55
Calibration . . . 55
Service . . . 56
Test, certificate, declaration . . . 56
Marking . . . 56

Application packages . . . 57
Heartbeat Technology . . . 57

Accessories . . . 58
Weather protection cover 316L . . . 58
Plastic weather protection cover . . . 59
Mounting bracket, adjustable . . . 59
M12 socket . . . 60
Remote display FHX50B . . . 61
Gas-tight feedthrough . . . 61
Commubox FXA195 HART . . . 62
HART Loop Converter HMX50 . . . 62
FieldPort SWA50 . . . 62
Wireless HART adapter SWA70 . . . 62
Fieldgate FXA42 . . . 62
Field Xpert SMT70 . . . 62
DeviceCare SFE100 . . . 62
FieldCare SFE500 . . . 62

Memograph M 62
RN42 62

Documentation 63
Document function 63

Registered trademarks 63

Important document information

Symbols

Safety symbols

DANGER
This symbol alerts you to a dangerous situation. Failure to avoid this situation will result in serious or fatal injury.

WARNING
This symbol alerts you to a dangerous situation. Failure to avoid this situation can result in serious or fatal injury.

CAUTION
This symbol alerts you to a dangerous situation. Failure to avoid this situation can result in minor or medium injury.

NOTICE
This symbol contains information on procedures and other facts which do not result in personal injury.

Electrical symbols

Direct current

Alternating current

Direct current and alternating current

Ground connection
A grounded terminal which, as far as the operator is concerned, is grounded via a grounding system.

Protective earth (PE)
Ground terminals that must be connected to ground prior to establishing any other connections.
The ground terminals are located on the inside and outside of the device.
- Inner ground terminal; protective earth is connected to the mains supply.
- Outer ground terminal; device is connected to the plant grounding system.

Symbols for certain types of information and graphics

Permitted
Procedures, processes or actions that are permitted

Preferred
Procedures, processes or actions that are preferred

Forbidden
Procedures, processes or actions that are forbidden

Tip
Indicates additional information

Reference to documentation

Reference to graphic

1, 2, 3, ...
Item numbers

A, B, C, ...
Views

Hazardous area
Indicates the hazardous area

Safe area (non-hazardous area)
Indicates the non-hazardous area

Graphic conventions

- Installation, explosion and electrical connection drawings are presented in simplified format
- Devices, assemblies, components and dimensional drawings are presented in reduced-line format
- Dimensional drawings are not to-scale representations; the dimensions indicated are rounded off to 2 decimal places
- Unless otherwise described, flanges are presented with sealing surface form EN1091-1, B2; ASME B16.5, RF; JIS B2220, RF

Function and system design

Measuring principle

The Micropilot is a "downward-looking" measuring system, operating based on the frequency modulated continuous wave method (FMCW). The antenna emits an electromagnetic wave at a continuously varying frequency. This wave is reflected by the product and received again by the antenna.

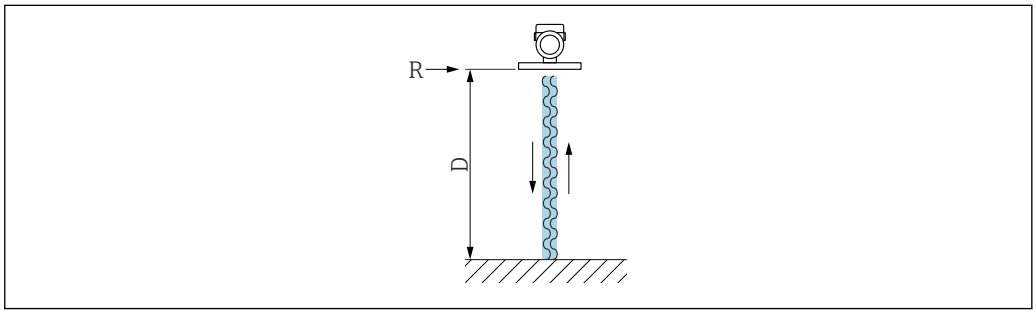

1 FMCW principle: transmission and reflection of the continuous wave

R Reference point of measurement
D Distance between reference point and product surface

The frequency of this wave is modulated in the form of a sawtooth signal between two limit frequencies f_1 and f_2:

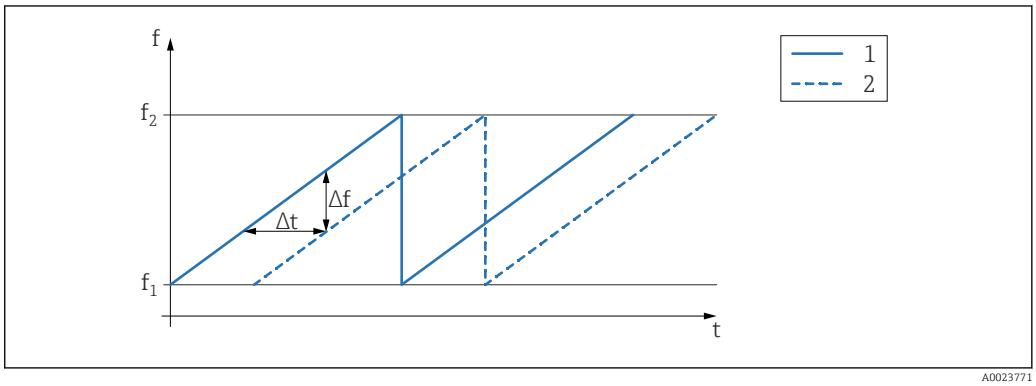

2 FMCW principle: result of frequency modulation

1 Transmitted signal
2 Received signal

This results in the following difference frequency at any time between the transmitted signal and the received signal:

$$\Delta f = k\,\Delta t$$

where Δt is the run time and k is the specified increase in frequency modulation.

Δt is given by the distance D between the reference point R and the product surface:

$D = (c\,\Delta t)\ /\ 2$

where c is the speed of propagation of the wave.

In summary, D can be calculated from the measured difference frequency Δf. D is then used to determine the content of the tank or silo.

Input

Measured variable

The measured variable is the distance between the reference point and the product surface. The level is calculated based on "E", the empty distance entered.

Measuring range

The measuring range starts at the point where the beam hits the tank floor. Levels below this point cannot be measured, particularly in the case of spherical bases or conical outlets.

Maximum measuring range

The maximum measuring range depends on the antenna size and design.

Antenna	Maximum measuring range
Encapsulated, PVDF, 40 mm (1.5 in)	22 m (72 ft)
Drip-off, PTFE, 50 mm (2 in)	50 m (164 ft)
Integrated, PEEK, 20 mm (0.75 in)	10 m (32.8 ft)
Integrated, PEEK, 40 mm (1.5 in)	22 m (72 ft)

Usable measuring range

The usable measuring range depends on the antenna size, the medium's reflective properties, the installation position and any possible interference reflections.

In principle, measurement is possible up to the tip of the antenna.

To avoid any material damage from corrosive or aggressive media or deposit buildup on the antenna, the end of the measuring range should be selected 10 mm (0.4 in) before the tip of the antenna **A**.

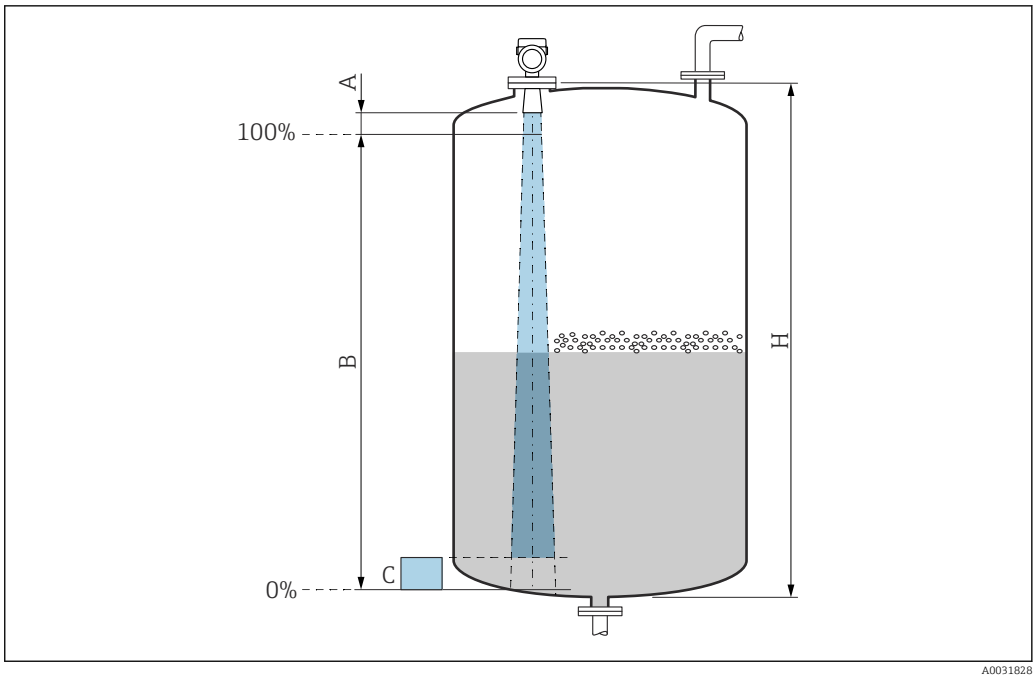

A Antenna tip + 10 mm (0.4 in)
B Smallest possible measuring range
C Distance above tank floor = 50 to 80 mm (1.97 to 3.15 in); (water-based medium εr = 2)
H Vessel height > 0.7 m (2.3 ft)

The media groups and the possible measuring range are described as a function of the application and media group in the following section. If the dielectric constant of the medium is not known, to ensure a reliable measurement assume the medium belongs to group B.

Media groups
- **A0** (ε_r 1.2 to 1.4)
  e.g. n-butane, liquid nitrogen, liquid hydrogen
- **A** (ε_r 1.4 to 1.9)
  Non-conductive liquids, e.g. liquefied gas
- **B** (ε_r 1.9 to 4)
  Non-conductive liquids, e.g. gasoline, oil, toluene, etc.
- **C** (ε_r 4 to 10)
  e.g. concentrated acid, organic solvents, ester, aniline, etc.
- **D** (ε_r >10)
  Conductive liquids, aqueous solutions, diluted acids, bases and alcohol

Measurement of the following media with absorbing gas phase
For example:
- Ammonia
- Acetone
- Methylene chloride
- Methyl ethyl ketone
- Propylene oxide
- VCM (vinyl chloride monomer)

To measure absorbing gases, either use a guided radar, measuring devices with another measuring frequency or another measuring principle.

If measurements must be performed in one of these media, please contact Endress+Hauser.

For the dielectric constants (DC values) of many media commonly used in industry, please refer to:
- Dielectric constant (DC value) Compendium CP01076F
- The Endress+Hauser "DC Values app" (available for Android and iOS)

Measurement in storage vessel

Storage vessel - measuring conditions
Calm medium surface (e.g. bottom filling, filling via immersion tube or rare filling from above)

Integrated antenna, PEEK, 20 mm (0.75 in) in storage vessel

	Media group	Measuring range
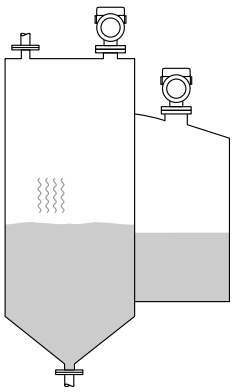	**A0** (ε_r 1.2 to 1.4)	1.5 m (5 ft)
	A (ε_r 1.4 to 1.9)	2.5 m (8 ft)
	B (ε_r 1.9 to 4)	5 m (16 ft)
	C (ε_r 4 to 10)	8 m (26 ft)
	D (ε_r >10)	10 m (33 ft)

Integrated antenna, PEEK, 40 mm (1.5 in) in storage vessel

	Media group	Measuring range
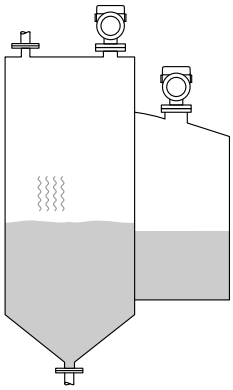	**A0** (ε_r 1.2 to 1.4)	3 m (10 ft)
	A (ε_r 1.4 to 1.9)	6 m (20 ft)
	B (ε_r 1.9 to 4)	11 m (36 ft)
	C (ε_r 4 to 10)	15 m (49 ft)
	D (ε_r >10)	22 m (72 ft)

Encapsulated antenna, PVDF, 40 mm (1.5 in) in storage vessel

	Media group	Measuring range
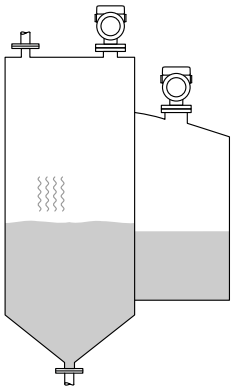	**A0** (ε_r 1.2 to 1.4)	3 m (10 ft)
	A (ε_r 1.4 to 1.9)	6 m (20 ft)
	B (ε_r 1.9 to 4)	11 m (36 ft)
	C (ε_r 4 to 10)	15 m (49 ft)
	D (ε_r >10)	22 m (72 ft)

PTFE Drip-off antenna, 50 mm (2 in) in storage vessel

	Media group	Measuring range
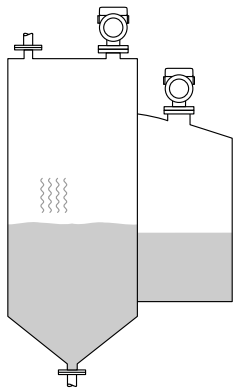	**A0** (ε_r 1.2 to 1.4)	7 m (23 ft)
	A (ε_r 1.4 to 1.9)	12 m (39 ft)
	B (ε_r 1.9 to 4)	23 m (75 ft)
	C (ε_r 4 to 10)	40 m (131 ft)
	D (ε_r >10)	50 m (164 ft)

Measurement in buffer vessel

Buffer vessel - measuring conditions
Moving medium surface (e.g. permanent free filling from above, mixing jets)

Integrated antenna, PEEK, 40 mm (1.5 in) in buffer vessel

	Media group	Measuring range
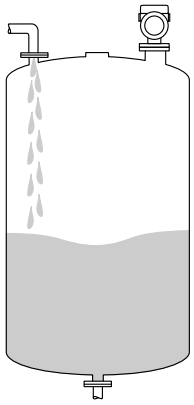	**A0** (ε_r 1.2 to 1.4)	1.5 m (5 ft)
	A (ε_r 1.4 to 1.9)	3 m (10 ft)
	B (ε_r 1.9 to 4)	6 m (20 ft)
	C (ε_r 4 to 10)	13 m (43 ft)
	D (ε_r >10)	20 m (66 ft)

Encapsulated antenna, PVDF, 40 mm (1.5 in) in buffer vessel

	Media group	Measuring range
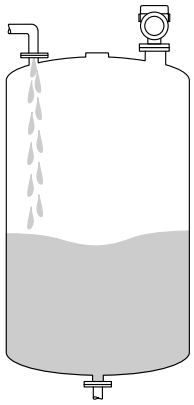	**A0** (ε_r 1.2 to 1.4)	1.5 m (5 ft)
	A (ε_r 1.4 to 1.9)	3 m (10 ft)
	B (ε_r 1.9 to 4)	6 m (20 ft)
	C (ε_r 4 to 10)	13 m (43 ft)
	D (ε_r >10)	20 m (66 ft)

PTFE Drip-off antenna, 50 mm (2 in) in buffer vessel

	Media group	Measuring range
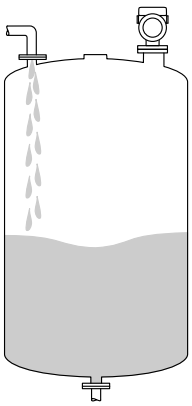	**A0** (ε_r 1.2 to 1.4)	4 m (13 ft)
	A (ε_r 1.4 to 1.9)	7 m (23 ft)
	B (ε_r 1.9 to 4)	13 m (43 ft)
	C (ε_r 4 to 10)	28 m (92 ft)
	D (ε_r >10)	44 m (144 ft)

Measurement in vessel with agitator

Vessel with agitator - measuring conditions
Turbulent medium surface (e.g. from filling from above, stirrers and baffles)

Integrated antenna, PEEK, 20 mm (0.75 in) in vessel with agitator

	Media group	Measuring range
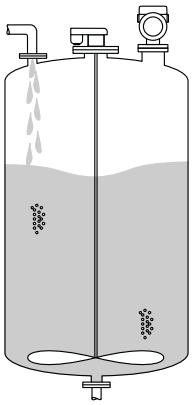	**A** (ε_r 1.4 to 1.9)	1 m (3.3 ft)
	B (ε_r 1.9 to 4)	1.5 m (5 ft)
	C (ε_r 4 to 10)	3 m (10 ft)
	D (ε_r >10)	5 m (16 ft)

Integrated antenna, PEEK, 40 mm (1.5 in) in vessel with agitator

	Media group	Measuring range
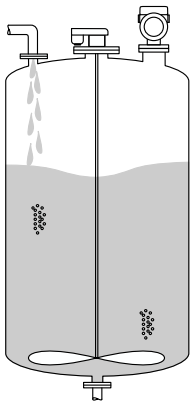	**A0** (ε_r 1.2 to 1.4)	1 m (3.3 ft)
	A (ε_r 1.4 to 1.9)	1.5 m (5 ft)
	B (ε_r 1.9 to 4)	3 m (10 ft)
	C (ε_r 4 to 10)	7 m (23 ft)
	D (ε_r >10)	11 m (36 ft)

Encapsulated antenna, PVDF, 40 mm (1.5 in) in vessel with agitator

	Media group	Measuring range
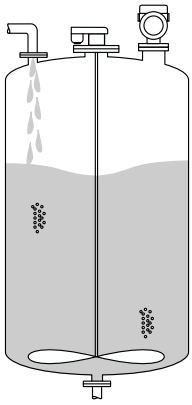	**A0** (ε_r 1.2 to 1.4)	1 m (3.3 ft)
	A (ε_r 1.4 to 1.9)	1.5 m (5 ft)
	B (ε_r 1.9 to 4)	3 m (10 ft)
	C (ε_r 4 to 10)	7 m (23 ft)
	D (ε_r >10)	11 m (36 ft)

PTFE Drip-off antenna, 50 mm (2 in) in vessel with agitator

	Media group	Measuring range
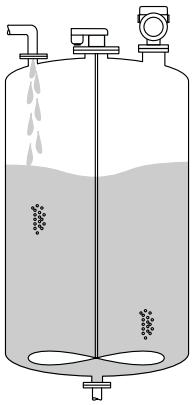	**A0** (ε_r 1.2 to 1.4)	2 m (7 ft)
	A (ε_r 1.4 to 1.9)	4 m (13 ft)
	B (ε_r 1.9 to 4)	7 m (23 ft)
	C (ε_r 4 to 10)	15 m (49 ft)
	D (ε_r >10)	25 m (82 ft)

Operating frequency

Approx. 80 GHz

Up to 8 devices can be installed in a tank without the devices mutually influencing one another.

Transmission power

- Peak power: 6.3 mW
- Average output power: 63 µW

Output

Output signal

HART

Signal coding:
FSK ±0.5 mA over current signal

Data transmission rate:
1 200 Bit/s

Galvanic isolation:
Yes

Current output

4 to 20 mA with superimposed digital communication protocol HART, 2-wire

The current output offers a choice of three different operating modes:
- 4.0 to 20.5 mA
- NAMUR NE 43: 3.8 to 20.5 mA (factory setting)
- US mode: 3.9 to 20.8 mA

Signal on alarm

Current output
Failure mode (according to NAMUR Recommendation NE 43):
- Minimum alarm (= factory setting): 3.6 mA
- Maximum alarm: 22 mA

Local display
Status signal (according to NAMUR Recommendation NE 107):
Plain text display

Operating tool via service interface (CDI)
Status signal (according to NAMUR Recommendation NE 107):
Plain text display

Operating tool via HART communication
Status signal (according to NAMUR Recommendation NE 107):
Plain text display

Linearization

The linearization function of the device allows the conversion of the measured value into any unit of length, weight, flow or volume.

Pre-programmed linearization curves
Linearization tables for calculating the volume in the following vessels are preprogrammed into the device:
- Pyramid bottom
- Conical bottom
- Angled bottom
- Horizontal cylinder
- Sphere

Other linearization tables of up to 32 value pairs can be entered manually.

Load

4 to 20 mA HART

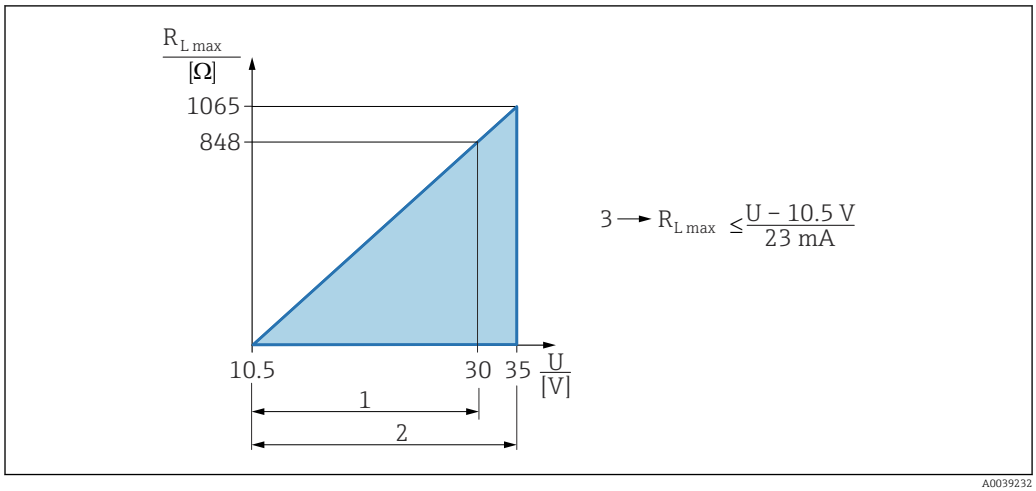

A0039232

1 Power supply 10.5 to 30 VDC Ex i
2 Power supply 10.5 to 35 VDC, for other types of protection and non-certified device versions
3 R_{Lmax} maximum load resistance
U Supply voltage

Operation via handheld terminal or PC with operating program: take minimum communication resistor of 250 Ω into consideration.

Protocol-specific data

HART

Manufacturer ID:
17 (0x11{hex})

Device type ID:
0x11C1

Device revision:
1

HART specification:
7

DD version:
1

Device description files (DTM, DD)
Information and files under:
- www.endress.com
  On the product page for the device: Documents/Software → Device drivers
- www.fieldcommgroup.org

HART load:
Min. 250 Ω

HART device variables

The following measured values are assigned to the device variables at the factory:

Device variable	Measured value
Assign PV [1]	Level linearized
Assign SV	Distance
Assign TV	Absolute echo amplitude
Assign QV	Relative echo amplitude

1) The PV is always applied to the current output.

Choice of HART device variables

- Level linearized
- Distance
- Terminal voltage
- Electronics temperature
- Sensor temperature
- Absolute echo amplitude
- Relative echo amplitude
- Area of incoupling
- Build-up index
- Build-up detected
- Foam index
- Foam detected
- Percent of range
- Loop current
- Terminal current
- Not used

Supported functions

- Burst mode
- Additional transmitter status
- Device locking

Wireless HART data

Minimum start-up voltage:
10.5 V

Start-up current:
< 3.6 mA

Starting time:
< 15 s

Minimum operating voltage:
10.5 V

Multidrop current:
4 mA

Time to establish connection:
< 30 s

Power supply

Terminal assignment

Single compartment housing

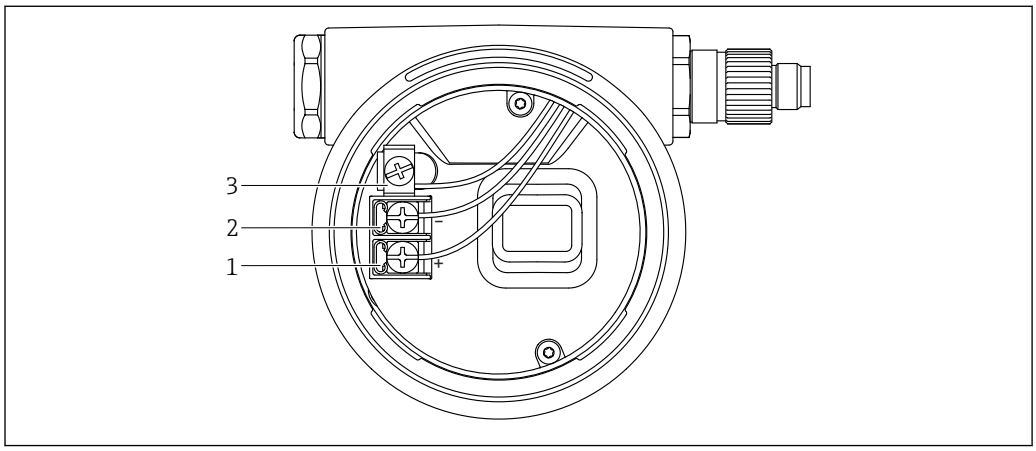

A0042594

3 Connection terminals and ground terminal in the connection compartment

1 Positive terminal
2 Negative terminal
3 Internal ground terminal

Dual compartment housing

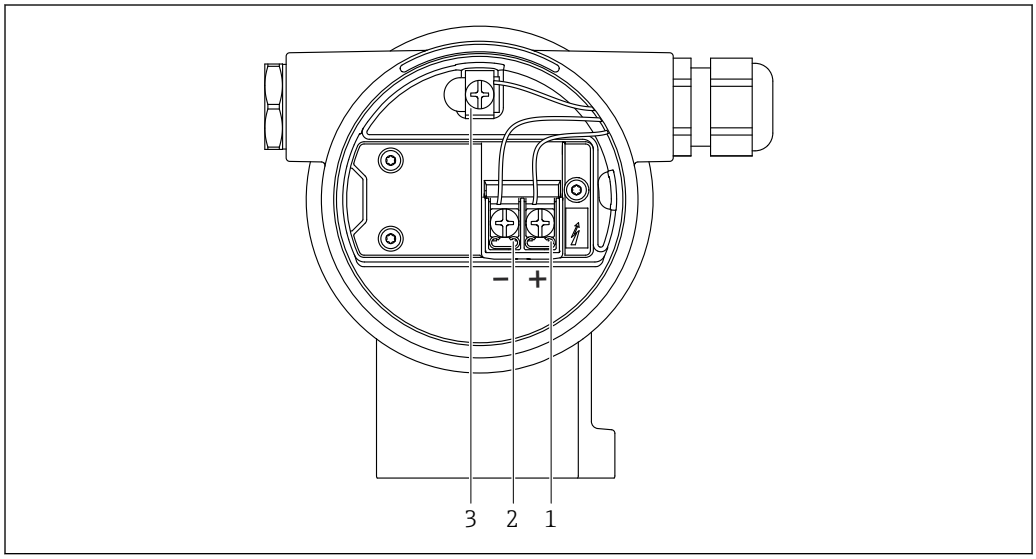

A0042803

4 Connection terminals and ground terminal in the connection compartment

1 Positive terminal
2 Negative terminal
3 Internal ground terminal

Dual compartment housing, L-form

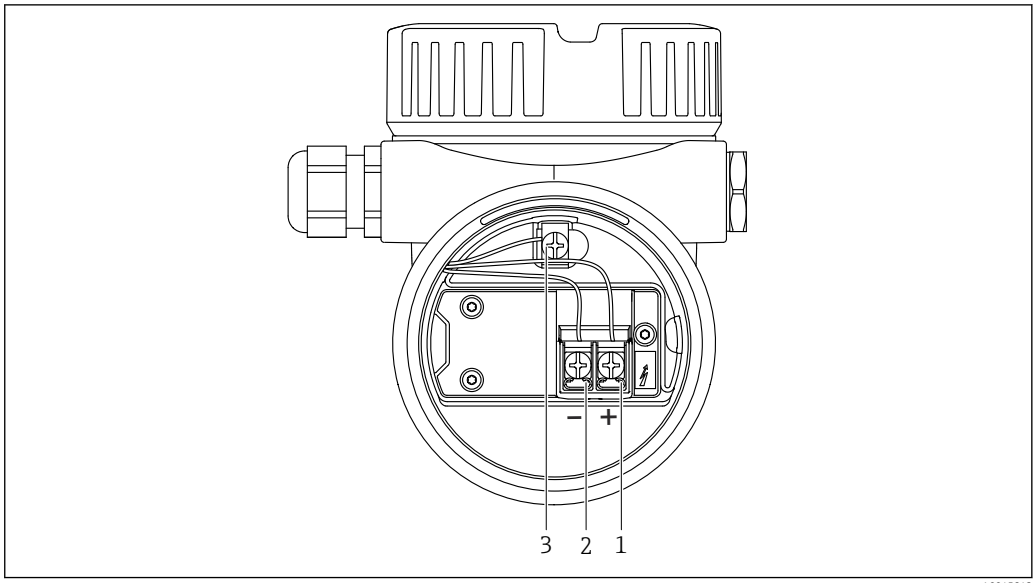

5 Connection terminals and ground terminal in the connection compartment

1 Positive terminal
2 Negative terminal
3 Internal ground terminal

Terminals

- Supply voltage and internal ground terminal: 0.5 to 2.5 mm^2 (20 to 14 AWG)
- External ground terminal: 0.5 to 4 mm^2 (20 to 12 AWG)

Available device plugs

In the case of devices with a plug, it is not necessary to open the housing for connection purposes.

Use the enclosed seals to prevent the penetration of moisture into the device.

Measuring devices with M12 plug

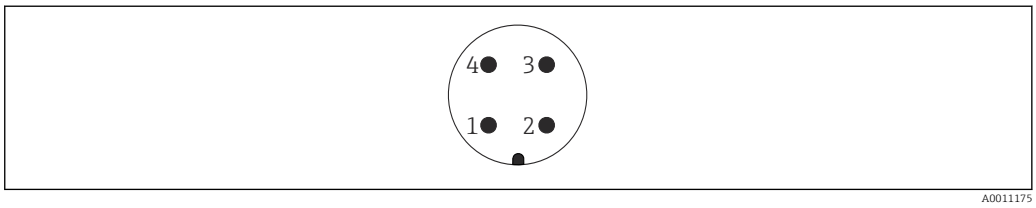

1 Signal +
2 Not assigned
3 Signal –
4 Ground

Various M-12 sockets are available as accessories for devices with M12 plugs.

Measuring devices with Harting plug Han7D

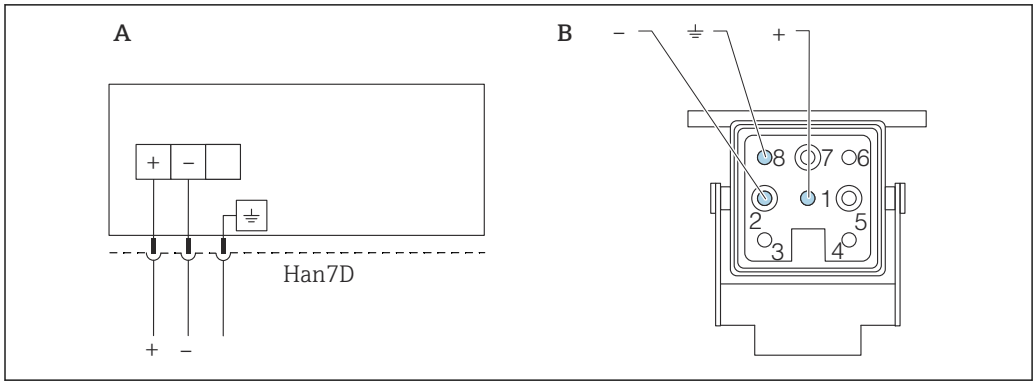

A0041011

A Electrical connection for devices with Harting plug Han7D
B View of the plug-in connection on the device
- Brown
⏚ Green/yellow
+ Blue

Material

CuZn, gold-plated plug-in jack and plug contacts

Supply voltage

The supply voltage depends on the selected type of device approval

Non-hazardous, Ex d, Ex e	10.5 to 35 V_{DC}
Ex i	10.5 to 30 V_{DC}
Nominal current	4 to 20 mA

The power unit must be tested to ensure it meets safety requirements (e.g., PELV, SELV, Class 2) and complies with the relevant protocol specifications.

A suitable circuit breaker must be provided for the device in accordance with IEC/EN61010-1

Potential equalization

The protective ground on the device must not be connected. If necessary, the potential matching line can be connected to the outer ground terminal of the transmitter before the device is connected.

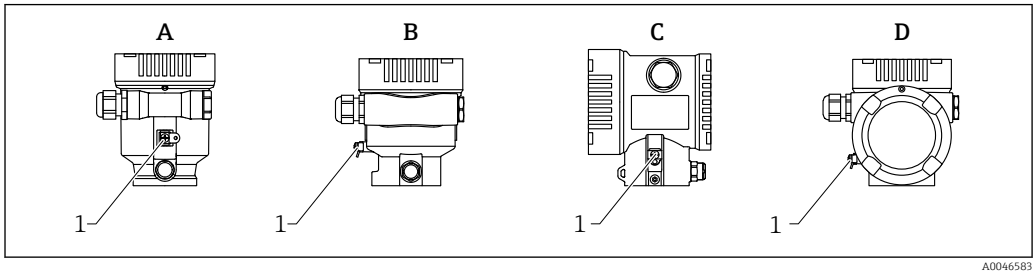

A0046583

A Single compartment housing, plastic
B Single compartment housing, aluminum
C Dual compartment housing
D Dual compartment housing, L-form
1 Ground terminal for connecting the potential matching line

WARNING

Explosion Hazard!

- Please refer to the separate documentation on applications in hazardous areas for the safety instructions.

For optimum electromagnetic compatibility:
- Keep the potential matching line as short as possible
- Observe a cross-section of at least 2.5 mm² (14 AWG)

Cable entries

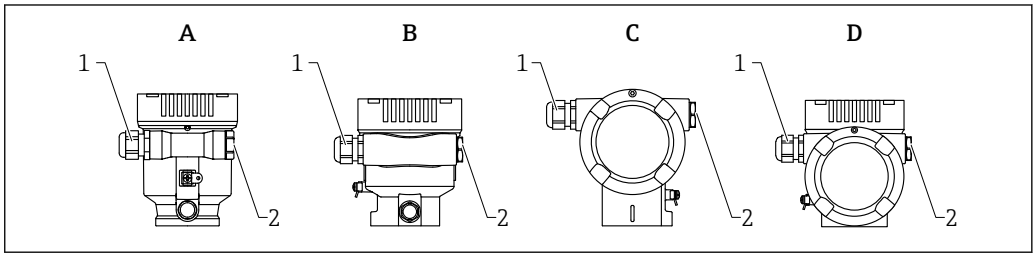

A *Single compartment housing, plastic*
B *Single compartment housing, aluminum*
C *Dual compartment housing*
D *Dual compartment housing, L-form*
1 *Cable entry*
2 *Dummy plug*

The type of cable entry depends on the device version ordered.

Always route connecting cables downwards so that moisture cannot penetrate the connection compartment.

If necessary, create a drip loop or use a weather protection cover.

Cable specification

Rated cross-section
- Supply voltage
  0.5 to 2.5 mm² (20 to 13 AWG)
- Protective earth or grounding of the cable shield
  > 1 mm² (17 AWG)
- External ground terminal
  0.5 to 4 mm² (20 to 12 AWG)

Cable outer diameter
The cable outer diameter depends on the cable gland used
- Coupling, plastic:
  Ø5 to 10 mm (0.2 to 0.38 in)
- Coupling, nickel-plated brass:
  Ø7 to 10.5 mm (0.28 to 0.41 in)
- Coupling, stainless steel:
  Ø7 to 12 mm (0.28 to 0.47 in)

Overvoltage protection

The overvoltage protection can optionally be ordered as a "Mounted accessory" via the product structure

Devices without optional overvoltage protection

Equipment from Endress+Hauser fulfills the requirements of the product standard IEC / DIN EN 61326-1 (Table 2 Industrial Environment).

Depending on the type of port (DC power supply, input/output port) different testing levels according to IEC / DIN EN 61326-1 against transient overvoltages (Surge) are applied (IEC / DIN EN 61000-4-5 Surge):
Test level on DC power ports and input/output ports is 1 000 V line to earth

Devices with optional overvoltage protection

- Spark-over voltage: min. 400 V_{DC}
- Tested according to IEC / DIN EN 60079-14 sub chapter 12.3 (IEC / DIN EN 60060-1 chapter 7)
- Nominal discharge current: 10 kA

Overvoltage category

Overvoltage category II

Performance characteristics

Reference operating conditions

- Temperature = +24 °C (+75 °F) ±5 °C (±9 °F)
- Pressure = 960 mbar abs. (14 psia) ±100 mbar (±1.45 psi)
- Humidity = 60 % ±15 %
- Reflector: metal plate with diameter ≥ 1 m (40 in)
- No major interference reflections inside the signal beam

Maximum measured error

Reference accuracy

Accuracy
The accuracy is the sum of the non-linearity, non-repeatability and hysteresis.
- Measuring distance up to 0.8 m (2.62 ft): max. ±4 mm (±0.16 in)
- Measuring distance > 0.8 m (2.62 ft): ±1 mm (±0.04 in)

Non-repeatability
Non-repeatability is already included in the accuracy.
≤ 1 mm (0.04 in)

If conditions deviate from the reference operating conditions, the offset/zero point that results from the installation conditions can be up to ±4 mm (±0.16 in). This additional offset/zero point can be eliminated by entering a correction (**Level correction** parameter) during commissioning.

Differing values in near-range applications

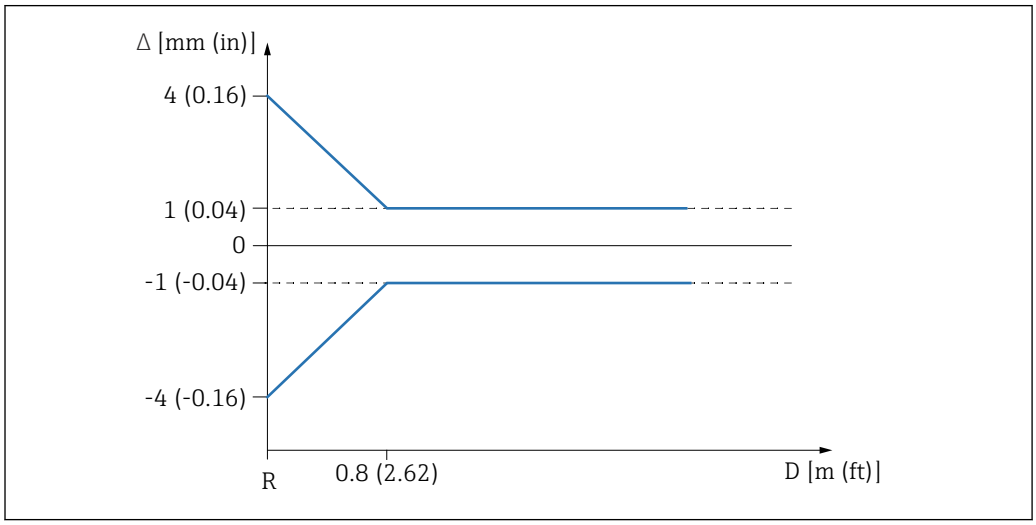

6 Maximum measured error in near-range applications

Δ Maximum measured error
R Reference point of the distance measurement
D Distance from reference point of antenna

Measured value resolution

Dead band according to DIN EN IEC 61298-2 / DIN EN IEC 60770-1:

- Digital: 1 mm
- Analog: 1 µA

Response time

According to DIN EN IEC 61298-2 / DIN EN IEC 60770-1 , the step response time is the time following an abrupt change in the input signal up until the changed output signal has adopted 90 % of the steady-state value for the first time.

The response time can be configured.

The following step response times apply (in accordance with DIN EN IEC 61298-2 / DIN EN IEC 60770-1) when damping is switched off:
- Pulse frequency ≥ 5/s (cycle time ≤ 200 ms)
  at U= 10.5 to 35 V, I= 4 to 20 mA and T_{amb}= −50 to +80 °C (−58 to +176 °F)
- Step response time < 1 s

Influence of ambient temperature

The output changes due to the effect of the ambient temperature with respect to the reference temperature.

The measurements are performed according to DIN EN IEC 61298-3 / DIN EN IEC 60770-1

Digital output (HART)
Average T_C = 2 mm/10 K

Analog (current output)
- Zero point (4 mA): average T_C = 0.02 %/10 K
- Span (20 mA): average T_C = 0.05 %/10 K

Influence of gas phase

High pressure reduces the speed of propagation of the measuring signals in the gas/vapor above the medium. This effect depends on the type of gas phase and its temperature. This results in a systematic measured error that increases with increasing distance between the reference point of the measurement (flange) and the surface of the product. The following table shows this measured error for some typical gases/vapors (with regard to the distance, a positive value means that an excessively large distance is measured):

Measured error for some typical gases/vapors

Gas phase	Temperature	Pressure		
		1 bar (14.5 psi)	10 bar (145 psi)	25 bar (362 psi)
Air/nitrogen	+20 °C (+68 °F)	0.00 %	+0.22 %	+0.58 %
	+200 °C (+392 °F)	−0.01 %	+0.13 %	+0.36 %
	+400 °C (+752 °F)	−0.02 %	+0.08 %	+0.29 %
Hydrogen	+20 °C (+68 °F)	−0.01 %	+0.10 %	+0.25 %
	+200 °C (+392 °F)	−0.02 %	+0.05 %	+0.17 %
	+400 °C (+752 °F)	−0.02 %	+0.03 %	+0.11 %
Water (saturated steam)	+100 °C (+212 °F)	+0.02 %	-	-
	+180 °C (+356 °F)	-	+2.10 %	-
	+263 °C (+505 °F)	-	-	+4.15 %
	+310 °C (+590 °F)	-	-	-
	+364 °C (+687 °F)	-	-	-

With a known, constant pressure, it is possible to compensate for this measured error with a linearization, for example.

Mounting

Mounting location

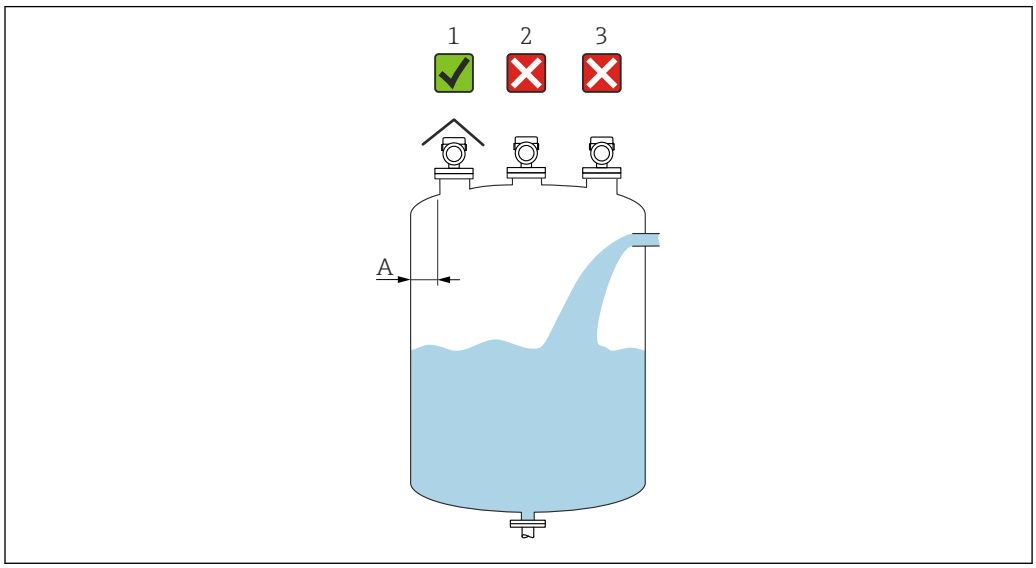

A0016882

A Recommended distance from wall to nozzle outer edge ~ 1/6 of the vessel diameter. The device should never be mounted closer than 15 cm (5.91 in) to the tank wall.
1 Use of a weather protection cover; protection from direct sunlight or rain
2 Installation in the center, interference can cause signal loss
3 Do not install above the filling curtain

Orientation

Internal vessel fittings

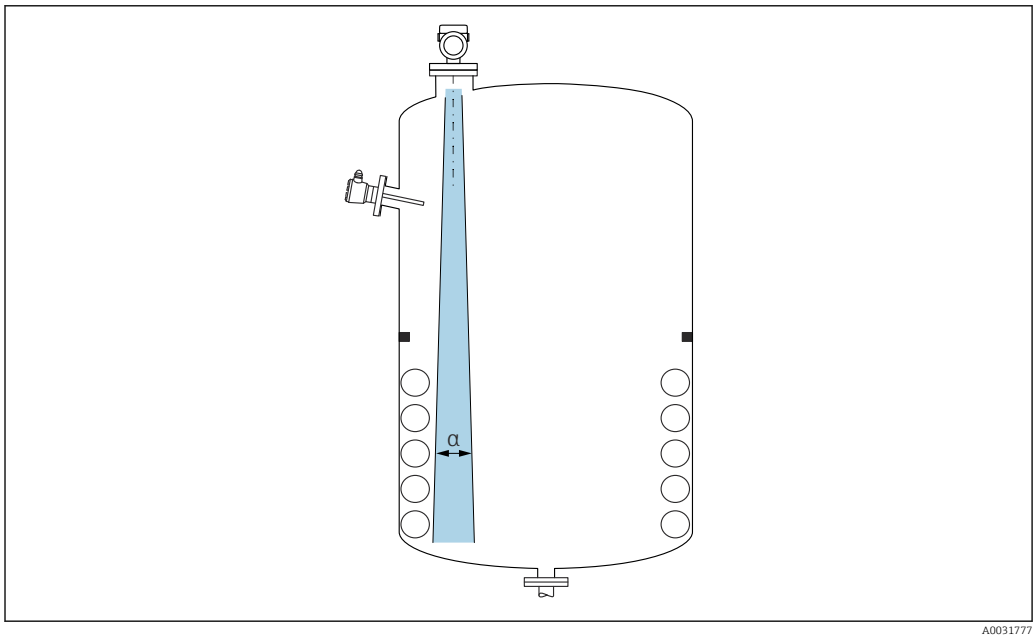

A0031777

Avoid internal fittings (point level switches, temperature sensors, struts, vacuum rings, heating coils, baffles etc.) inside the signal beam. Pay attention to the beam angle **α**.

Avoiding interference echoes

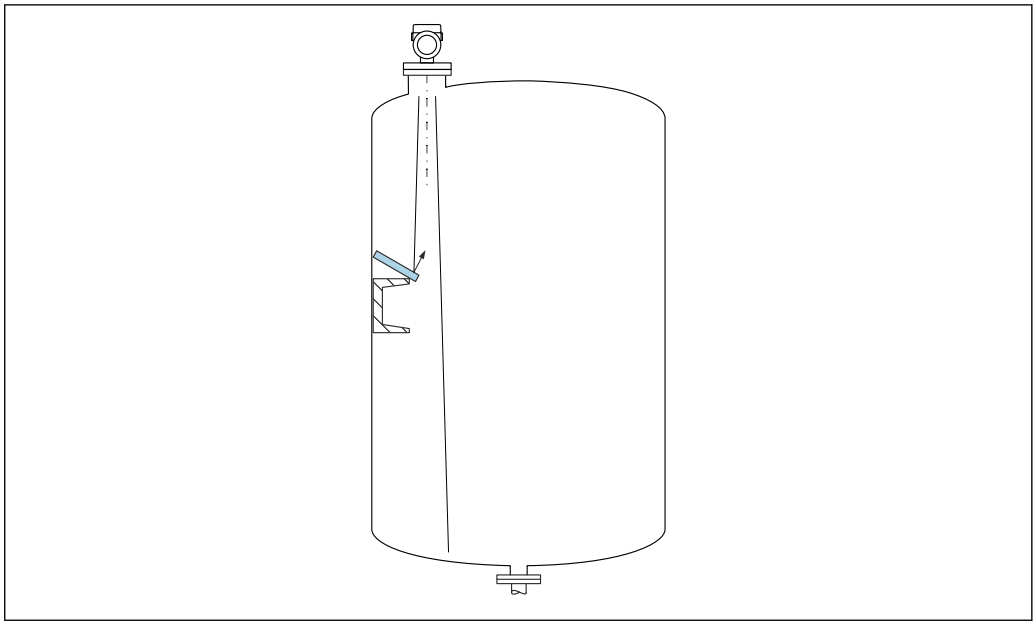

A0031813

Metal deflector plates, installed at an angle to scatter the radar signals, help prevent interference echoes.

Vertical alignment of antenna axis

Align the antenna so that it is perpendicular to the product surface.

The maximum reach of the antenna can be reduced, or additional interference signals can occur, if the antenna is not installed perpendicular to the product.

Radial alignment of the antenna

Based on the directional characteristic, radial alignment of the antenna is not necessary.

Installation instructions

Encapsulated antenna, PVDF 40 mm (1.57 in)

Information about the mounting nozzle

The maximum nozzle length H_{max} depends on the nozzle diameter *D*.

Maximum nozzle length H_{max} as a function of the nozzle diameter D

	⌀D	H_{max}
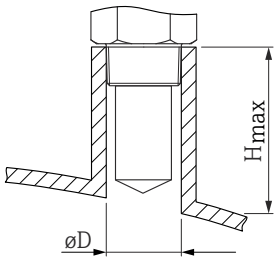	50 to 80 mm (2 to 3.2 in)	600 mm (24 in)
	80 to 100 mm (3.2 to 4 in)	1000 mm (24 in)
	100 to 150 mm (4 to 6 in)	1250 mm (50 in)
	≥ 150 mm (6 in)	1850 mm (74 in)

In the case of longer nozzles, reduced measuring performance must be expected.

Please note the following:
- The end of the nozzle must be smooth and free from burrs.
- The edge of the nozzle should be rounded.
- Mapping must be performed.
- Please contact the manufacturer's support department for applications with nozzles that are higher than indicated in the table.

PTFE Drip-off antenna 50 mm (2 in)

Information about the mounting nozzle

The maximum nozzle length H_{max} depends on the nozzle diameter *D*.

Maximum nozzle length H_{max} as a function of the nozzle diameter D

	⌀D	H_{max}
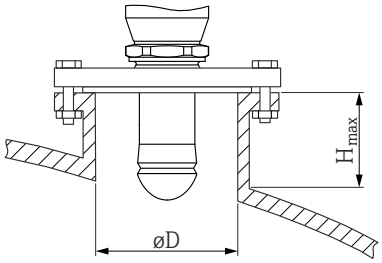	50 to 80 mm (2 to 3.2 in)	750 mm (30 in)
	80 to 100 mm (3.2 to 4 in)	1 150 mm (46 in)
	100 to 150 mm (4 to 6 in)	1 450 mm (58 in)
	≥150 mm (6 in)	2 200 mm (88 in)

In the case of longer nozzles, reduced measuring performance must be expected.

Please note the following:
- The end of the nozzle must be smooth and free from burrs.
- The edge of the nozzle should be rounded.
- Mapping must be performed.
- Please contact the manufacturer's support department for applications with nozzles that are higher than indicated in the table.

Integrated antenna, PEEK 20 mm (0.75 in)

Information about the mounting nozzle

The maximum nozzle length H_{max} depends on the nozzle diameter *D*.

Maximum nozzle length H_{max} as a function of the nozzle diameter D

	⌀D	H_{max}
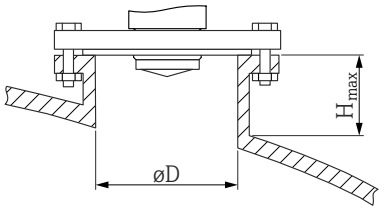	40 to 50 mm (1.6 to 2 in)	200 mm (8 in)
	50 to 80 mm (2 to 3.2 in)	300 mm (12 in)
	80 to 100 mm (3.2 to 4 in)	450 mm (18 in)
	100 to 150 mm (4 to 6 in)	550 mm (22 in)
	≥ 150 mm (6 in)	850 mm (34 in)

In the case of longer nozzles, reduced measuring performance must be expected.

Please note the following:
- The end of the nozzle must be smooth and free from burrs.
- The edge of the nozzle should be rounded.
- Mapping must be performed.
- Please contact the manufacturer's support department for applications with nozzles that are higher than indicated in the table.

Integrated antenna, PEEK 40 mm (1.5 in)

Information about the mounting nozzle

The maximum nozzle length H_{max} depends on the nozzle diameter *D*.

Maximum nozzle length H_{max} as a function of the nozzle diameter D

	ØD	H_{max}
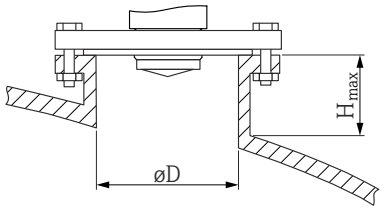	40 to 50 mm (1.6 to 2 in)	400 mm (16 in)
	50 to 80 mm (2 to 3.2 in)	550 mm (22 in)
	80 to 100 mm (3.2 to 4 in)	850 mm (34 in)
	100 to 150 mm (4 to 6 in)	1 050 mm (42 in)
	≥150 mm (6 in)	1 600 mm (64 in)

In the case of longer nozzles, reduced measuring performance must be expected.

Please note the following:
- The end of the nozzle must be smooth and free from burrs.
- The edge of the nozzle should be rounded.
- Mapping must be performed.
- Please contact the manufacturer's support department for applications with nozzles that are higher than indicated in the table.

Beam angle

The beam angle is defined as the angle α where the energy density of the radar waves reaches half the value of the maximum energy density (3 dB width). Microwaves are also emitted outside the signal beam and can be reflected off interfering installations.

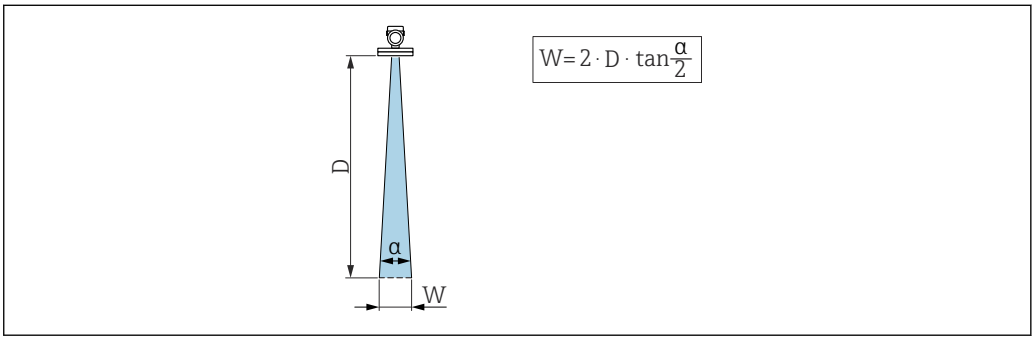

7 *Relationship between beam angle a, distance D and beamwidth diameter W*

The beamwidth diameter **W** depends on the beam angle **α** and the distance **D**.

Encapsulated antenna, PVDF 40 mm / 1-1/2", α = 8 °

W = D × 0.14	D	W
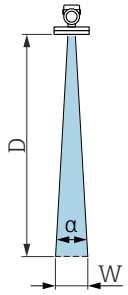	5 m (16 ft)	0.70 m (2.29 ft)
	10 m (33 ft)	1.40 m (4.58 ft)
	15 m (49 ft)	2.09 m (6.87 ft)
	20 m (66 ft)	2.79 m (9.16 ft)
	22 m (72.18 ft)	3.08 m (10.10 ft)

Drip-off, PTFE 50 mm (2 in) antenna, α = 6 °

W = D × 0.10	D	W
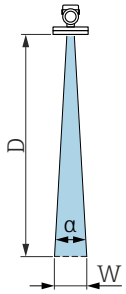	5 m (16 ft)	0.52 m (1.70 ft)
	10 m (33 ft)	1.04 m (3.41 ft)
	15 m (49 ft)	1.56 m (5.12 ft)
	20 m (66 ft)	2.08 m (6.82 ft)
	25 m (82 ft)	2.60 m (8.53 ft)
	30 m (98 ft)	3.12 m (10.24 ft)
	35 m (115 ft)	3.64 m (11.94 ft)
	40 m (131 ft)	4.16 m (13.65 ft)
	45 m (148 ft)	4.68 m (15.35 ft)
	50 m (164 ft)	5.20 m (17.06 ft)

Integrated antenna, PEEK 20 mm / 3/4", α 14 °

W = D × 0.26	D	W
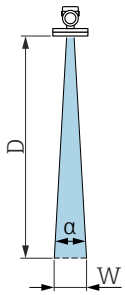	5 m (16 ft)	1.23 m (4.04 ft)
	10 m (33 ft)	2.46 m (8.07 ft)

Integrated antenna, PEEK 40 mm / 1-1/2", α = 8 °

W = D × 0.14	D	W
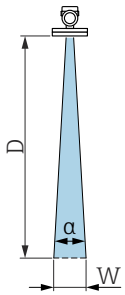	5 m (16 ft)	0.70 m (2.29 ft)
	10 m (33 ft)	1.40 m (4.58 ft)
	15 m (49 ft)	2.09 m (6.87 ft)
	20 m (66 ft)	2.79 m (9.16 ft)
	22 m (72.18 ft)	3.08 m (10.10 ft)

Special mounting instructions

Measurement through a ball valve

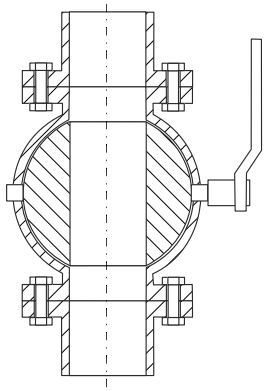

A0034564

- Measurements can be performed through an open full bore ball valve without any problems.
- At the transitions, no gap exceeding 1 mm (0.04 in) may be left.
- Opening diameter of ball valve must always correspond to the pipe diameter; avoid edges and constrictions.

External measurement through plastic cover or dielectric windows

- Dielectric constant of medium: $\varepsilon_r \geq 10$
- The distance from the tip of the antenna to the tank should be approx. 100 mm (4 in).
- Avoid installation positions where condensate or buildup can form between the antenna and the vessel
- In the case of outdoor installations, ensure that the area between the antenna and the tank is protected from the weather
- Do not install any fittings or attachments between the antenna and the tank that could reflect the signal

The thickness of the tank ceiling or the dielectric window depends on the ε_r of the material.

The material thickness can be a full multiple of the optimum thickness (table); it is important to note, however, that the microwave transparency decreases significantly with increasing material thickness.

Optimum material thickness

Material	Optimum material thickness
PE; ε_r 2.3	1.25 mm (0.049 in)
PTFE; ε_r 2.1	1.30 mm (0.051 in)
PP; ε_r 2.3	1.25 mm (0.049 in)
Perspex; ε_r 3.1	1.10 mm (0.043 in)

Container with heat insulation

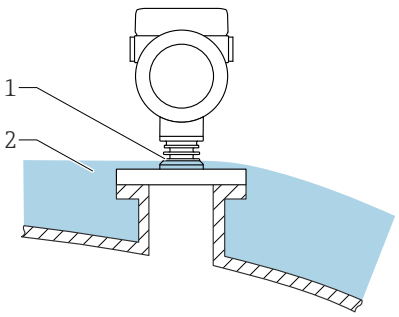

A0046566

If process temperatures are high, the device should be included in the usual container insulation system (2) to prevent the electronics from heating as a result of thermal radiation or convection. The rib structure (1) must not be insulated.

Environment

Ambient temperature range

The following values apply up to a process temperature of +85 °C (+185 °F). At higher process temperatures, the permitted ambient temperature is reduced.

- Without LCD display:
  - Standard: −40 to +85 °C (−40 to +185 °F)
  - Optionally available: −50 to +85 °C (−58 to +185 °F) with restricted operating life and performance
  - Optionally available: −60 to +85 °C (−76 to +185 °F) with restricted operating life and performance; below −50 °C (−58 °F): devices can be damaged permanently
- With LCD display: −40 to +85 °C (−40 to +185 °F) with limitations in optical properties such as display speed and contrast. Can be used without limitations up to −20 to +60 °C (−4 to +140 °F)

If operating outdoors in strong sunlight:
- Mount the device in the shade.
- Avoid direct sunlight, particularly in warm climatic regions.
- Use a weather protection cover (see accessories).

Ambient temperature limits

The permitted ambient temperature (T_a) depends on the selected housing material and process temperature range.

In the event of temperature (T_p) at the process connection, the permitted ambient temperature (T_a) is reduced.

The following information only takes functional aspects into consideration. Additional restrictions may apply for certified device versions.

Plastic housing material

Order option; process temperature range: **−20 to +150 °C (−4 to +302 °F)**

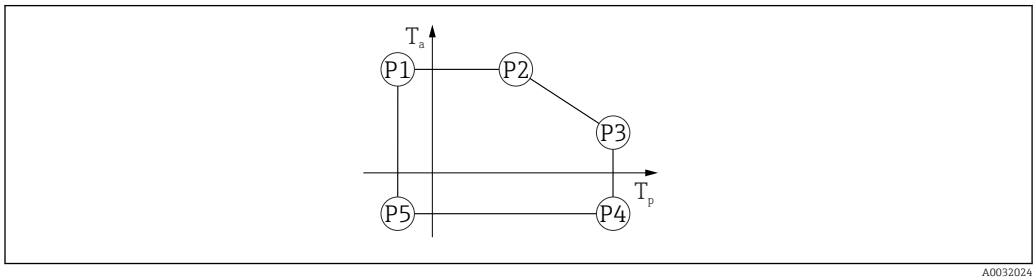

8 Plastic housing material; process temperature range: −20 to +150 °C (−4 to +302 °F)

P1 = T_p: −20 °C (−4 °F) | T_a: +76 °C (+169 °F)
P2 = T_p: +76 °C (+169 °F) | T_a: +76 °C (+169 °F)
P3 = T_p: +150 °C (+302 °F) | T_a: +25 °C (+77 °F)
P4 = T_p: +150 °C (+302 °F) | T_a: −20 °C (−4 °F)
P5 = T_p: −20 °C (−4 °F) | T_a: −20 °C (−4 °F)

In the case of devices with plastic housings and CSA C/US approval, the selected process temperature range of −20 to +150 °C (−4 to +302 °F) is limited to 0 to +150 °C (+32 to +302 °F).

Process temperature range: **0 to +150 °C (+32 to +302 °F), with CSA C/US approval**

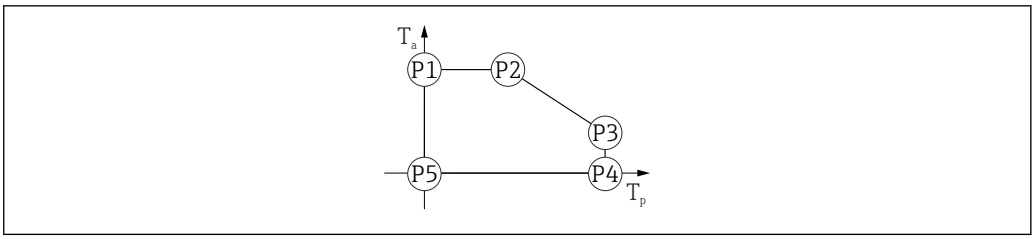

A0048826

9 *Plastic housing material; process temperature range: 0 to +150 °C (+32 to +302 °F) with CSA C/US approval*

P1 = T_p: 0 °C (+32 °F) | T_a: +76 °C (+169 °F)
P2 = T_p: +76 °C (+169 °F) | T_a: +76 °C (+169 °F)
P3 = T_p: +150 °C (+302 °F) | T_a: +25 °C (+77 °F)
P4 = T_p: +150 °C (+302 °F) | T_a: 0 °C (+32 °F)
P5 = T_p: 0 °C (+32 °F) | T_a: 0 °C (+32 °F)

Order option; process temperature range: **−20 to +200 °C (−4 to +392 °F)**

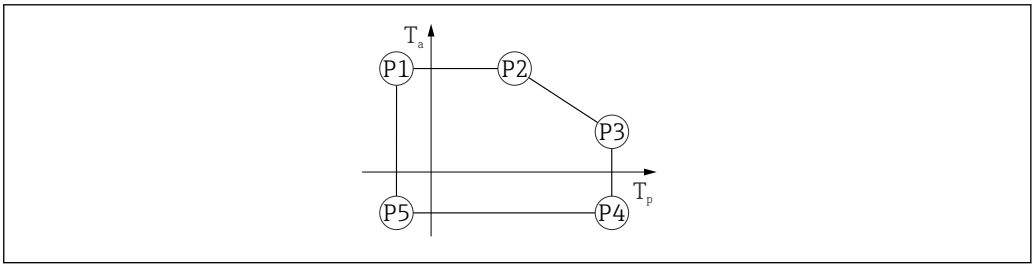

A0032024

10 *Plastic housing material; process temperature range: −20 to +200 °C (−4 to +392 °F)*

P1 = T_p: −20 °C (−4 °F) | T_a: +76 °C (+169 °F)
P2 = T_p: +76 °C (+169 °F) | T_a: +76 °C (+169 °F)
P3 = T_p: +200 °C (+392 °F) | T_a: +27 °C (+81 °F)
P4 = T_p: +200 °C (+392 °F) | T_a: −20 °C (−4 °F)
P5 = T_p: −20 °C (−4 °F) | T_a: −20 °C (−4 °F)

In the case of devices with plastic housings and CSA C/US approval, the selected process temperature range of −20 to +200 °C (−4 to +392 °F) is limited to 0 to +200 °C (+32 to +392 °F).

Process temperature range: **0 to +200 °C (+32 to +392 °F), restriction with CSA C/US approval**

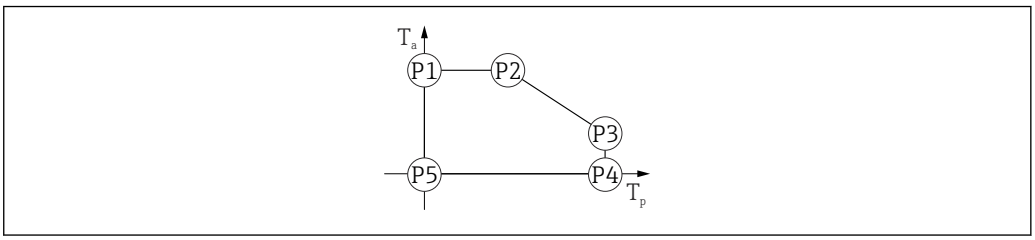

A0048826

11 *Plastic housing material; process temperature range: 0 to +200 °C (+32 to +392 °F) with CSA C/US approval*

P1 = T_p: 0 °C (+32 °F) | T_a: +76 °C (+169 °F)
P2 = T_p: +76 °C (+169 °F) | T_a: +76 °C (+169 °F)
P3 = T_p: +200 °C (+392 °F) | T_a: +27 °C (+81 °F)
P4 = T_p: +200 °C (+392 °F) | T_a: 0 °C (+32 °F)
P5 = T_p: 0 °C (+32 °F) | T_a: 0 °C (+32 °F)

Process temperature range: **−40 to +80 °C (−40 to +176 °F)**

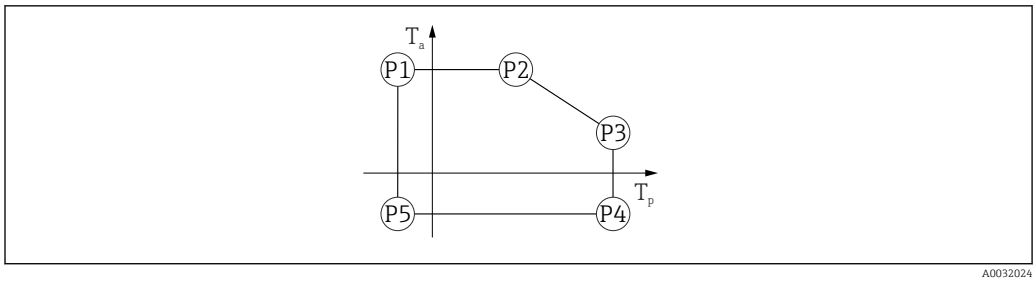

12 Plastic housing material; process temperature range: −40 to +80 °C (−40 to +176 °F)

P1 = T_p: −40 °C (−40 °F) | T_a: +76 °C (+169 °F)
P2 = T_p: +76 °C (+169 °F) | T_a: +76 °C (+169 °F)
P3 = T_p: +80 °C (+176 °F) | T_a: +75 °C (+167 °F)
P4 = T_p: +80 °C (+176 °F) | T_a: −40 °C (−40 °F)
P5 = T_p: −40 °C (−40 °F) | T_a: −40 °C (−40 °F)

In the case of devices with plastic housings and CSA C/US approval, the selected process temperature range of −40 to +80 °C (−40 to +176 °F) is limited to 0 to +80 °C (+32 to +176 °F).

Process temperature range: **0 to +80 °C (+32 to +176 °F), with CSA C/US approval**

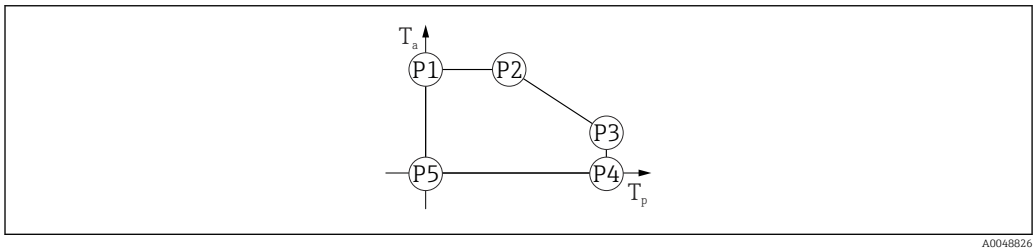

13 Plastic housing material; process temperature range: 0 to +80 °C (+32 to +176 °F) with CSA C/US approval

P1 = T_p: 0 °C (+32 °F) | T_a: +76 °C (+169 °F)
P2 = T_p: +76 °C (+169 °F) | T_a: +76 °C (+169 °F)
P3 = T_p: +80 °C (+176 °F) | T_a: +75 °C (+167 °F)
P4 = T_p: +80 °C (+176 °F) | T_a: 0 °C (+32 °F)
P5 = T_p: 0 °C (+32 °F) | T_a: 0 °C (+32 °F)

Process temperature range: **−40 to +130 °C (−40 to +266 °F)**

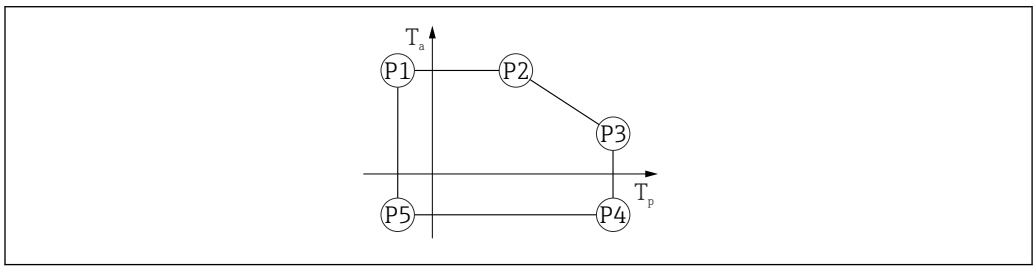

14 Plastic housing material; process temperature range: −40 to +130 °C (−40 to +266 °F)

P1 = T_p: −40 °C (−40 °F) | T_a: +76 °C (+169 °F)
P2 = T_p: +76 °C (+169 °F) | T_a: +76 °C (+169 °F)
P3 = T_p: +130 °C (+266 °F) | T_a: +52 °C (+126 °F)
P4 = T_p: +130 °C (+266 °F) | T_a: −40 °C (−40 °F)
P5 = T_p: −40 °C (−40 °F) | T_a: −40 °C (−40 °F)

In the case of devices with plastic housings and CSA C/US approval, the selected process temperature range of −40 to +130 °C (−40 to +266 °F) is limited to 0 to +130 °C (+32 to +266 °F).

Process temperature range: **0 to +130 °C (+32 to +266 °F), with CSA C/US approval**

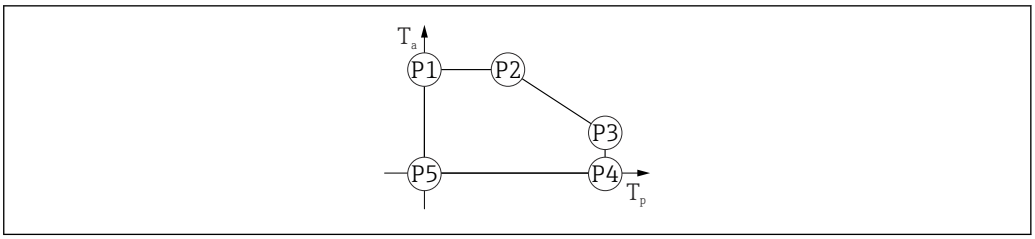

A0048826

15 *Plastic housing material; process temperature range: 0 to +130 °C (+32 to +266 °F) with CSA C/US approval*

P1 = T_p: 0 °C (+32 °F) | T_a: +76 °C (+169 °F)
P2 = T_p: +76 °C (+169 °F) | T_a: +76 °C (+169 °F)
P3 = T_p: +130 °C (+266 °F) | T_a: +52 °C (+126 °F)
P4 = T_p: +130 °C (+266 °F) | T_a: 0 °C (+32 °F)
P5 = T_p: 0 °C (+32 °F) | T_a: 0 °C (+32 °F)

Process temperature range: **−40 to +150 °C (−40 to +302 °F)**

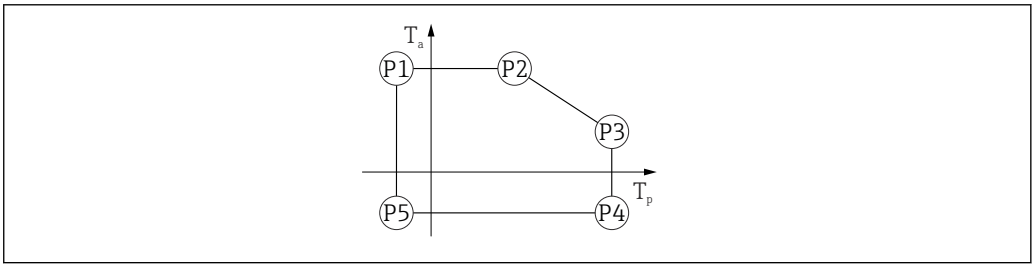

A0032024

16 *Plastic housing material; process temperature range: −40 to +150 °C (−40 to +302 °F)*

P1 = T_p: −40 °C (−40 °F) | T_a: +76 °C (+169 °F)
P2 = T_p: +76 °C (+169 °F) | T_a: +76 °C (+169 °F)
P3 = T_p: +150 °C (+302 °F) | T_a: +25 °C (+77 °F)
P4 = T_p: +150 °C (+302 °F) | T_a: −40 °C (−40 °F)
P5 = T_p: −40 °C (−40 °F) | T_a: −40 °C (−40 °F)

In the case of devices with plastic housings and CSA C/US approval, the selected process temperature range of **−40 to +150 °C (−40 to +302 °F)** is limited to 0 to +150 °C (+32 to +302 °F).

Process temperature range: **0 to +150 °C (+32 to +302 °F), with CSA C/US approval**

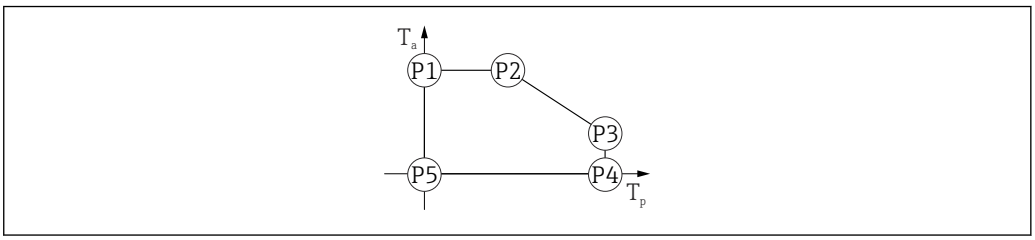

A0048826

17 *Plastic housing material; process temperature range: 0 to +150 °C (+32 to +302 °F) with CSA C/US approval*

P1 = T_p: 0 °C (+32 °F) | T_a: +76 °C (+169 °F)
P2 = T_p: +76 °C (+169 °F) | T_a: +76 °C (+169 °F)
P3 = T_p: +150 °C (+302 °F) | T_a: +25 °C (+77 °F)
P4 = T_p: +150 °C (+302 °F) | T_a: 0 °C (+32 °F)
P5 = T_p: 0 °C (+32 °F) | T_a: 0 °C (+32 °F)

Process temperature range: **−40 to +200 °C (−40 to +392 °F)**

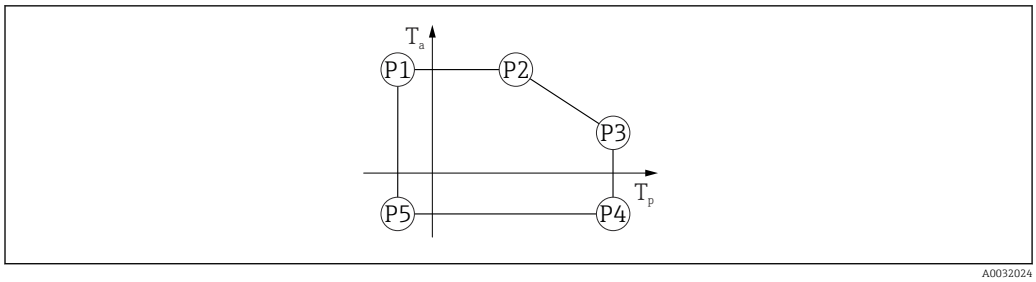

18 Plastic housing material; process temperature range: −40 to +200 °C (−40 to +392 °F)

P1 = T_p: −40 °C (−40 °F) | T_a: +76 °C (+169 °F)
P2 = T_p: +76 °C (+169 °F) | T_a: +76 °C (+169 °F)
P3 = T_p: +200 °C (+392 °F) | T_a: +27 °C (+81 °F)
P4 = T_p: +200 °C (+392 °F) | T_a: −40 °C (−40 °F)
P5 = T_p: −40 °C (−40 °F) | T_a: −40 °C (−40 °F)

In the case of devices with plastic housings and CSA C/US approval, the selected process temperature range of **−40 to +200 °C (−40 to +392 °F)** is limited to 0 to +200 °C (+32 to +392 °F).

Process temperature range: **0 to +200 °C (+32 to +392 °F), with CSA C/US approval**

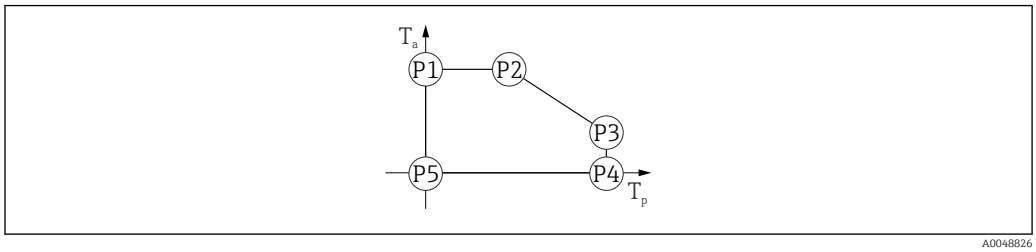

19 Plastic housing material; process temperature range: 0 to +200 °C (+32 to +392 °F) with CSA C/US approval

P1 = T_p: 0 °C (+32 °F) | T_a: +76 °C (+169 °F)
P2 = T_p: +76 °C (+169 °F) | T_a: +76 °C (+169 °F)
P3 = T_p: +200 °C (+392 °F) | T_a: +27 °C (+81 °F)
P4 = T_p: +200 °C (+392 °F) | T_a: 0 °C (+32 °F)
P5 = T_p: 0 °C (+32 °F) | T_a: 0 °C (+32 °F)

Aluminum housing material

Order option; process temperature range: **−20 to +150 °C (−4 to +302 °F)**

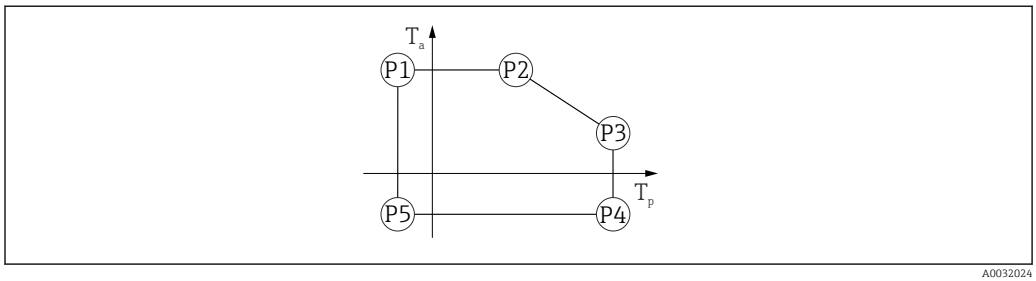

20 Aluminum housing material; process temperature range: −20 to +150 °C (−4 to +302 °F)

P1 = T_p: −20 °C (−4 °F) | T_a: +79 °C (+174 °F)
P2 = T_p: +79 °C (+174 °F) | T_a: +79 °C (+174 °F)
P3 = T_p: +150 °C (+302 °F) | T_a: +53 °C (+127 °F)
P4 = T_p: +150 °C (+302 °F) | T_a: −20 °C (−4 °F)
P5 = T_p: −20 °C (−4 °F) | T_a: −20 °C (−4 °F)

Order option; process temperature range: **−20 to +200 °C (−4 to +392 °F)**

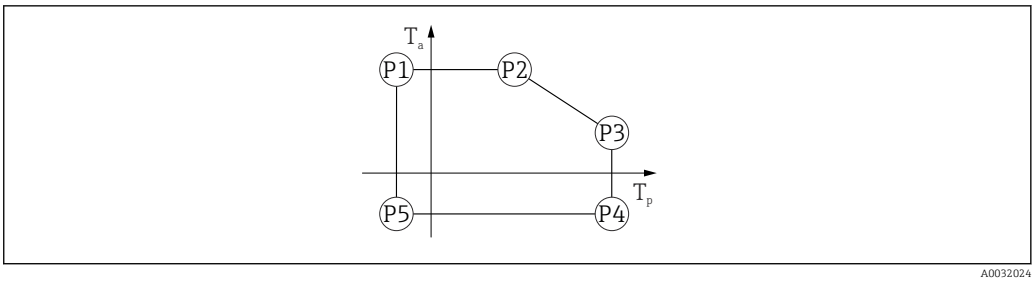

21 Aluminum housing material; process temperature range: −20 to +200 °C (−4 to +392 °F)

P1 = T_p: −20 °C (−4 °F) | T_a: +79 °C (+174 °F)
P2 = T_p: +79 °C (+174 °F) | T_a: +79 °C (+174 °F)
P3 = T_p: +200 °C (+392 °F) | T_a: +47 °C (+117 °F)
P4 = T_p: +200 °C (+392 °F) | T_a: −20 °C (−4 °F)
P5 = T_p: −20 °C (−4 °F) | T_a: −20 °C (−4 °F)

Order option; process temperature range: **−40 to +80 °C (−40 to +176 °F)**

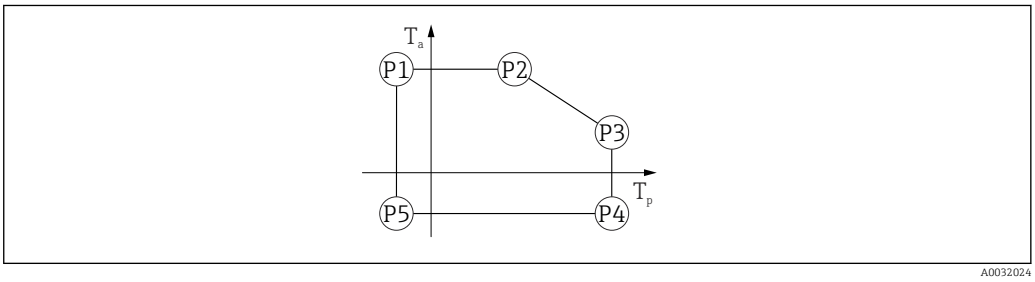

22 Aluminum housing material; process temperature range: −40 to +80 °C (−40 to +176 °F)

P1 = T_p: −40 °C (−40 °F) | T_a: +79 °C (+174 °F)
P2 = T_p: +79 °C (+174 °F) | T_a: +79 °C (+174 °F)
P3 = T_p: +80 °C (+176 °F) | T_a: +79 °C (+174 °F)
P4 = T_p: +80 °C (+176 °F) | T_a: −40 °C (−40 °F)
P5 = T_p: −40 °C (−40 °F) | T_a: −40 °C (−40 °F)

Order option; process temperature range: **−40 to +130 °C (−40 to +266 °F)**

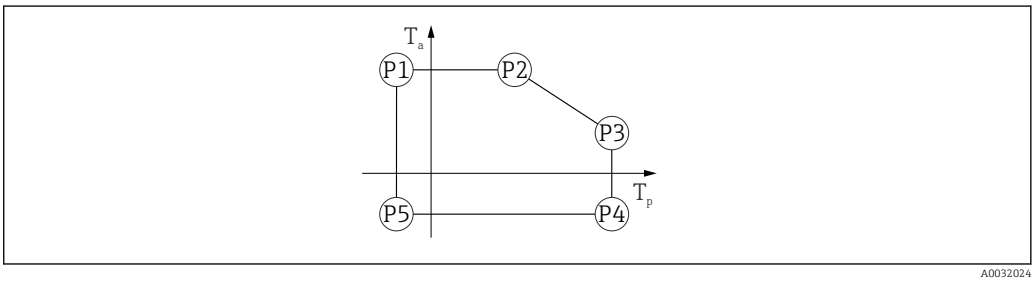

23 Aluminum housing material; process temperature range: −40 to +130 °C (−40 to +266 °F)

P1 = T_p: −40 °C (−40 °F) | T_a: +79 °C (+174 °F)
P2 = T_p: +79 °C (+174 °F) | T_a: +79 °C (+174 °F)
P3 = T_p: +130 °C (+266 °F) | T_a: +55 °C (+131 °F)
P4 = T_p: +130 °C (+266 °F) | T_a: −40 °C (−40 °F)
P5 = T_p: −40 °C (−40 °F) | T_a: −40 °C (−40 °F)

Order option; process temperature range: **−40 to +150 °C (−40 to +302 °F)**

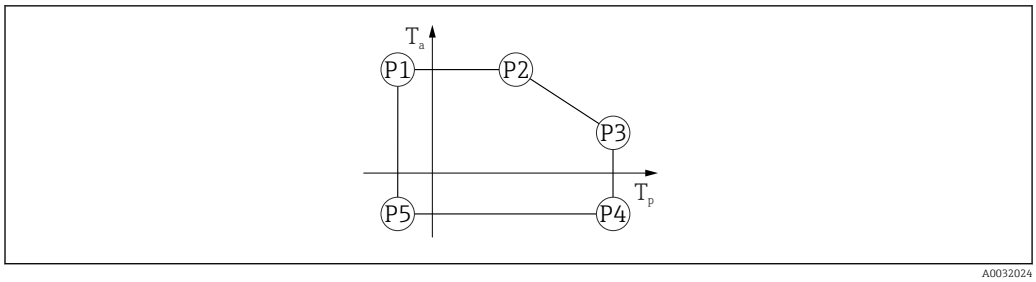

24 Aluminum housing material; process temperature range: −40 to +150 °C (−40 to +302 °F)

P1 = T_p: −40 °C (−40 °F) | T_a: +79 °C (+174 °F)
P2 = T_p: +79 °C (+174 °F) | T_a: +79 °C (+174 °F)
P3 = T_p: +150 °C (+302 °F) | T_a: +53 °C (+127 °F)
P4 = T_p: +150 °C (+302 °F) | T_a: −40 °C (−40 °F)
P5 = T_p: −40 °C (−40 °F) | T_a: −40 °C (−40 °F)

Order option; process temperature range: **−40 to +200 °C (−40 to +392 °F)**

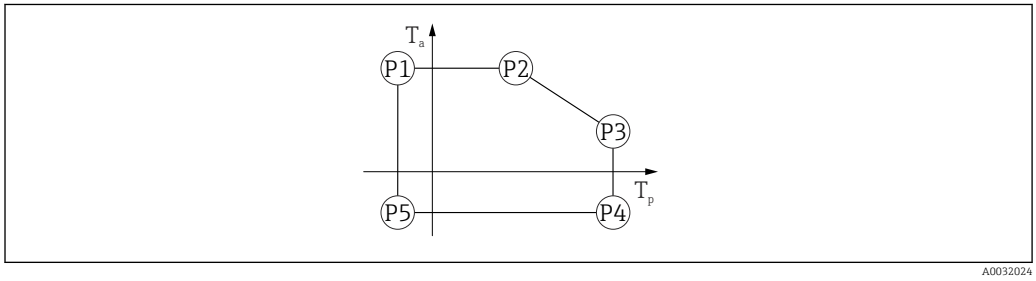

25 Aluminum housing material; process temperature range: −40 to +200 °C (−40 to +392 °F)

P1 = T_p: −40 °C (−40 °F) | T_a: +76 °C (+169 °F)
P2 = T_p: +76 °C (+169 °F) | T_a: +76 °C (+169 °F)
P3 = T_p: +200 °C (+392 °F) | T_a: +47 °C (+117 °F)
P4 = T_p: +200 °C (+392 °F) | T_a: −40 °C (−40 °F)
P5 = T_p: −40 °C (−40 °F) | T_a: −40 °C (−40 °F)

316L housing material

Order option; process temperature range: **−20 to +150 °C (−4 to +302 °F)**

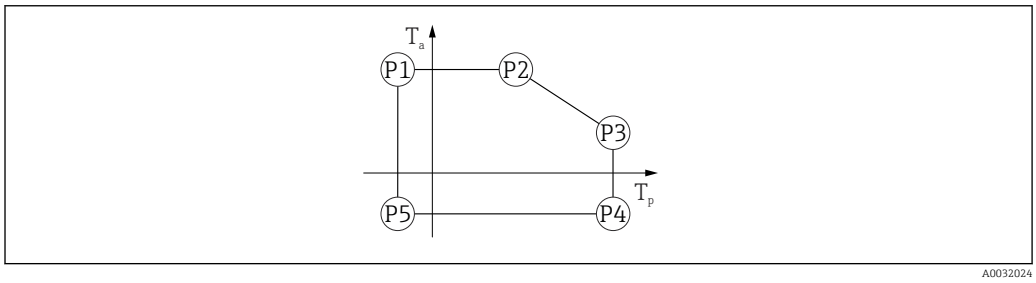

26 316L housing material; process temperature range: −20 to +150 °C (−4 to +302 °F)

P1 = T_p: −20 °C (−4 °F) | T_a: +77 °C (+171 °F)
P2 = T_p: +77 °C (+171 °F) | T_a: +77 °C (+171 °F)
P3 = T_p: +150 °C (+302 °F) | T_a: +43 °C (+109 °F)
P4 = T_p: +150 °C (+302 °F) | T_a: −20 °C (−4 °F)
P5 = T_p: −20 °C (−4 °F) | T_a: −20 °C (−4 °F)

Order option; process temperature range: **−20 to +200 °C (−4 to +392 °F)**

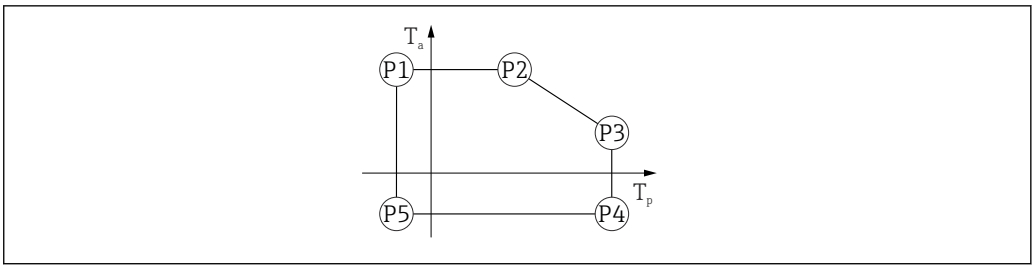

27 316L housing material; process temperature range: −20 to +200 °C (−4 to +392 °F)

P1 = T_p: −20 °C (−4 °F) | T_a: +77 °C (+171 °F)
P2 = T_p: +77 °C (+171 °F) | T_a: +77 °C (+171 °F)
P3 = T_p: +200 °C (+392 °F) | T_a: +38 °C (+100 °F)
P4 = T_p: +200 °C (+392 °F) | T_a: −20 °C (−4 °F)
P5 = T_p: −20 °C (−4 °F) | T_a: −20 °C (−4 °F)

Order option; process temperature range: **−40 to +80 °C (−40 to +176 °F)**

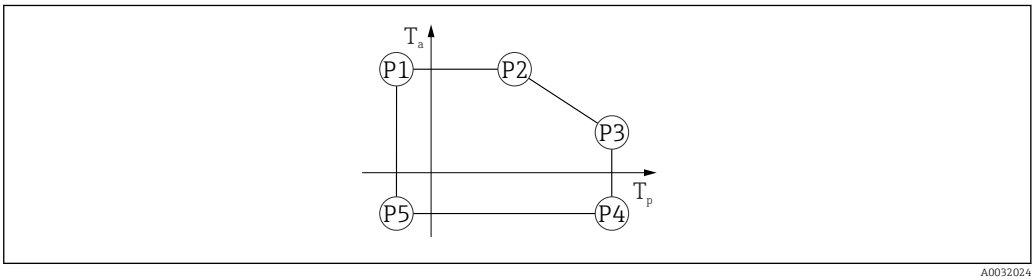

28 316L housing material; process temperature range: −40 to +80 °C (−40 to +176 °F)

P1 = T_p: −40 °C (−40 °F) | T_a: +77 °C (+171 °F)
P2 = T_p: +77 °C (+171 °F) | T_a: +77 °C (+171 °F)
P3 = T_p: +80 °C (+176 °F) | T_a: +77 °C (+171 °F)
P4 = T_p: +80 °C (+176 °F) | T_a: −40 °C (−40 °F)
P5 = T_p: −40 °C (−40 °F) | T_a: −40 °C (−40 °F)

Order option; process temperature range: **−40 to +150 °C (−40 to +302 °F)**

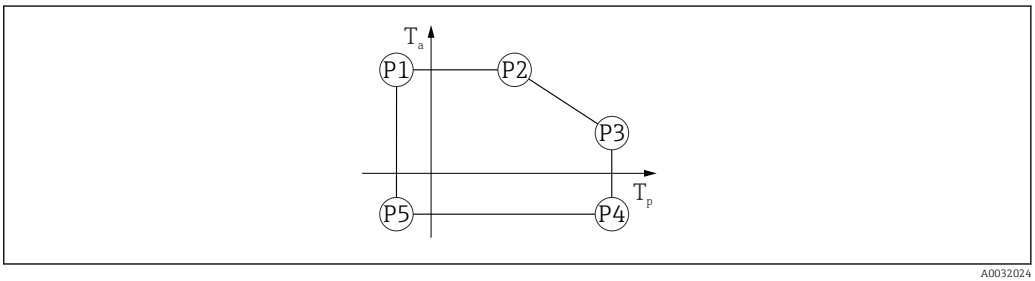

29 316L housing material; process temperature range: −40 to +150 °C (−40 to +302 °F)

P1 = T_p: −40 °C (−40 °F) | T_a: +77 °C (+171 °F)
P2 = T_p: +77 °C (+171 °F) | T_a: +77 °C (+171 °F)
P3 = T_p: +150 °C (+302 °F) | T_a: +43 °C (+109 °F)
P4 = T_p: +150 °C (+302 °F) | T_a: −40 °C (−40 °F)
P5 = T_p: −40 °C (−40 °F) | T_a: −40 °C (−40 °F)

Order option; process temperature range: **−40 to +200 °C (−40 to +392 °F)**

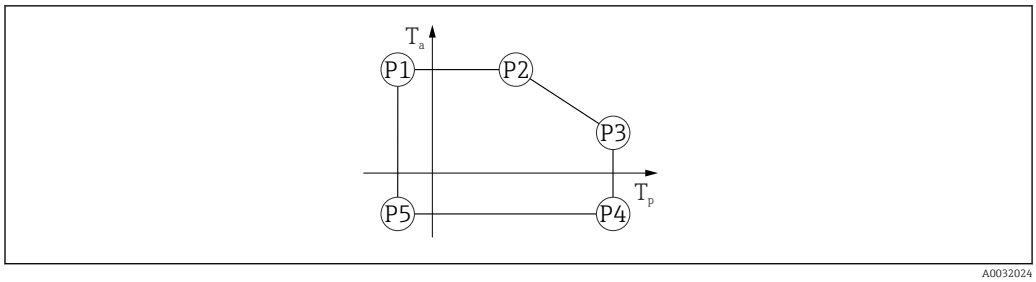

30 316L housing material; process temperature range: −40 to +200 °C (−40 to +392 °F)

P1 = T_p: −40 °C (−40 °F) | T_a: +77 °C (+171 °F)
P2 = T_p: +77 °C (+171 °F) | T_a: +77 °C (+171 °F)
P3 = T_p: +200 °C (+392 °F) | T_a: +38 °C (+100 °F)
P4 = T_p: +200 °C (+392 °F) | T_a: −40 °C (−40 °F)
P5 = T_p: −40 °C (−40 °F) | T_a: −40 °C (−40 °F)

Storage temperature

- Without LCD display: −40 to +90 °C (−40 to +194 °F)
- With LCD display: −40 to +85 °C (−40 to +185 °F)

Climate class

DIN EN 60068-2-38 (test Z/AD)

Installation height as per IEC61010-1 Ed.3

- Generally up to 2 000 m (6 600 ft) above sea level
- Over 2 000 m (6 600 ft) under the following conditions:
  - Supply voltage < 35 V_{DC}
  - Power supply, overvoltage category 1

Degree of protection

Test as per IEC 60529 and NEMA 250-2014

Housing and process connection

IP66/68, TYPE 4X/6P

(IP68: (1.83 mH_2O for 24 h))

Cable entries

- Gland M20, plastic, IP66/68 TYPE 4X/6P
- Gland M20, brass nickel plated, IP66/68 TYPE 4X/6P
- Gland M20, 316L, IP66/68 TYPE 4X/6P
- Thread M20, IP66/68 TYPE 4X/6P
- Thread G1/2, IP66/68 TYPE 4X/6P
  If the G1/2 thread is selected, the device is delivered with an M20 thread as standard and a G1/2 adapter is included with the delivery, along with the corresponding documentation
- Thread NPT1/2, IP66/68 TYPE 4X/6P
- HAN7D plug, 90 degrees, IP65 NEMA Type 4X
- M12 plug
  - When housing is closed and connecting cable is plugged in: IP66/67 NEMA Type 4X
  - When housing is open or connecting cable is not plugged in: IP20, NEMA Type 1

NOTICE

Plug M12 and plug HAN7D: incorrect mounting can invalidate the IP protection class!

- ▶ The degree of protection only applies if the connecting cable used is plugged in and screwed tight.
- ▶ The degree of protection only applies if the connecting cable used is specified according to IP67 NEMA Type 4X.
- ▶ The IP protection classes are only maintained if the dummy cap is used or the cable is connected.

Vibration resistance

DIN EN 60068-2-64 / IEC 60068-2-64 for 5 to 2 000 Hz: 1.5 $(m/s^2)^2/Hz$

Electromagnetic compatibility (EMC)

- Electromagnetic compatibility as per EN 61326 series and NAMUR recommendation EMC (NE21)
- With regard to the safety function (SIL), the requirements of EN 61326-3-x are satisfied
- Maximum measured error during EMC testing: < 0.5 % of the span.

For more details refer to the EU Declaration of Conformity.

Process

Process pressure range

WARNING

The maximum pressure for the device depends on the lowest-rated component with regard to pressure (components are: process connection, optional mounted parts or accessories).

- Only operate the device within the specified limits for the components!
- MWP (Maximum Working Pressure): The MWP is specified on the nameplate. This value refers to a reference temperature of +20 °C (+68 °F) and may be applied to the device for an unlimited time. Note temperature dependence of MWP. For flanges, refer to the following standards for the permitted pressure values at higher temperatures: EN 1092-1 (with regard to their stability/temperature property, the materials 1.4435 and 1.4404 are grouped together under EN 1092-1; the chemical composition of the two materials can be identical), ASME B16.5, JIS B2220 (the latest version of the standard applies in each case). MWP data that deviate from this are provided in the relevant sections of the Technical Information.
- The Pressure Equipment Directive (2014/68/EU) uses the abbreviation **PS** . This corresponds to the maximum working pressure (MWP) of the device.

The following tables show the dependencies between the seal material, process temperature (T_P) and process pressure range for each process connection that can be selected for the antenna used.

Encapsulated antenna, PVDF, 40 mm (1.5 in)

Process connection thread 1-½"

	Seal	T_p	Process pressure range
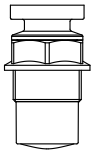 A0047831	PVDF encapsulated	−40 to +80 °C (−40 to +176 °F)	−1 to 3 bar (−14.5 to 43.5 psi)
	PVDF encapsulated	−40 to +130 °C (−40 to +266 °F)	−1 to 3 bar (−14.5 to 43.5 psi)
	The following temperature restriction applies for devices with the dust ignition-proof approval category 1D, 2D or 3D		
	PVDF encapsulated	−20 to +80 °C (−4 to +176 °F)	−1 to 3 bar (−14.5 to 43.5 psi)

Process connection UNI flange PP

	Seal	T_p	Process pressure range
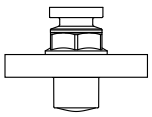 A0047947	PVDF encapsulated	−40 to +80 °C (−40 to +176 °F)	−1 to 3 bar (−14.5 to 43.5 psi)
	The following temperature restriction applies for devices with the dust ignition-proof approval category 1D, 2D or 3D		
	PVDF encapsulated	−20 to +80 °C (−4 to +176 °F)	−1 to 3 bar (−14.5 to 43.5 psi)

The pressure range may be further restricted in the event of a CRN approval.

Drip-off antenna 50 mm (2 in)

Process connection thread

	Seal	T_p	Process pressure range
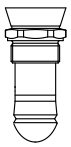 A0047447	FKM Viton GLT	−40 to +150 °C (−40 to +302 °F)	−1 to 16 bar (−14.5 to 232 psi)
	FKM Viton GLT	−40 to +200 °C (−40 to +392 °F)	−1 to 16 bar (−14.5 to 232 psi)
	EPDM	−40 to +150 °C (−40 to +302 °F)	−1 to 16 bar (−14.5 to 232 psi)
	HNBR	−20 to +150 °C (−4 to +302 °F)	−1 to 16 bar (−14.5 to 232 psi)
	FFKM Kalrez	−20 to +150 °C (−4 to +302 °F)	−1 to 16 bar (−14.5 to 232 psi)
	FFKM Kalrez	−20 to +200 °C (−4 to +392 °F)	−1 to 16 bar (−14.5 to 232 psi)

Process connection UNI flange PP

	Seal	T_p	Process pressure range
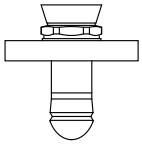 A0047726	FKM Viton GLT	−40 to +80 °C (−40 to +176 °F)	−1 to 3 bar (−14.5 to 43.5 psi)
	EPDM	−40 to +80 °C (−40 to +176 °F)	−1 to 3 bar (−14.5 to 43.5 psi)
	The following temperature restriction applies for devices with the HNBR or FFKM Kalrez O-ring		
	HNBR	−20 to +80 °C (−4 to +176 °F)	−1 to 3 bar (−14.5 to 43.5 psi)
	FFKM Kalrez	−20 to +80 °C (−4 to +176 °F)	−1 to 3 bar (−14.5 to 43.5 psi)

Process connection UNI flange 316L

	Seal	T_p	Process pressure range
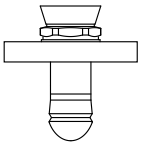 A0047726	FKM Viton GLT	−40 to +150 °C (−40 to +302 °F)	−1 to 3 bar (−14.5 to 43.5 psi)
	FKM Viton GLT	−40 to +200 °C (−40 to +392 °F)	−1 to 3 bar (−14.5 to 43.5 psi)
	EPDM	−40 to +150 °C (−40 to +302 °F)	−1 to 3 bar (−14.5 to 43.5 psi)
	HNBR	−20 to +150 °C (−4 to +302 °F)	−1 to 3 bar (−14.5 to 43.5 psi)
	FFKM Kalrez	−20 to +150 °C (−4 to +302 °F)	−1 to 3 bar (−14.5 to 43.5 psi)
	FFKM Kalrez	−20 to +200 °C (−4 to +392 °F)	−1 to 3 bar (−14.5 to 43.5 psi)

The pressure range may be further restricted in the event of a CRN approval.

Integrated antenna, PEEK, 20 mm (0.75 in)

Process connection thread 3/4"

	Seal	T_p	Process pressure range
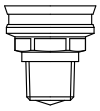 A0047832	FKM Viton GLT	−40 to +150 °C (−40 to +302 °F)	−1 to 20 bar (−14.5 to 290 psi)
	FKM Viton GLT	−40 to +200 °C (−40 to +392 °F)	−1 to 20 bar (−14.5 to 290 psi)
	FFKM Kalrez	−20 to +150 °C (−4 to +302 °F)	−1 to 20 bar (−14.5 to 290 psi)
	FFKM Kalrez	−20 to +200 °C (−4 to +392 °F)	−1 to 20 bar (−14.5 to 290 psi)

The pressure range may be further restricted in the event of a CRN approval.

Integrated antenna, PEEK, 40 mm (1.5 in)

Process connection thread 1-½"

	Seal	T_p	Process pressure range
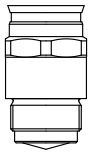 A0047833	FKM Viton GLT	−40 to +150 °C (−40 to +302 °F)	−1 to 20 bar (−14.5 to 290 psi)
	FKM Viton GLT	−40 to +200 °C (−40 to +392 °F)	−1 to 20 bar (−14.5 to 290 psi)
	FFKM Kalrez	−20 to +150 °C (−4 to +302 °F)	−1 to 20 bar (−14.5 to 290 psi)
	FFKM Kalrez	−20 to +200 °C (−4 to +392 °F)	−1 to 20 bar (−14.5 to 290 psi)

The pressure range may be further restricted in the event of a CRN approval.

Dielectric constant

For liquids
$\varepsilon_r \geq 1.2$

Contact Endress+Hauser for applications with lower dielectric constants than indicated.

Mechanical construction

Dimensions

The dimensions of the individual components must be added together for the total dimensions.

Plastic single compartment housing

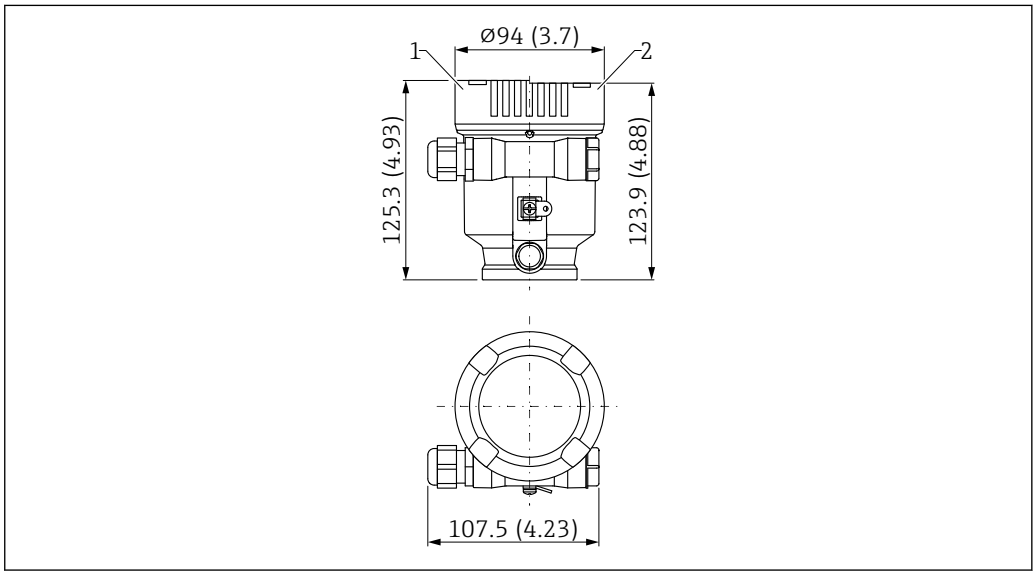

31 Dimensions of single compartment housing, plastic (PBT)

1 Height with cover with plastic viewing window
2 Cover without viewing window

Aluminum single compartment housing

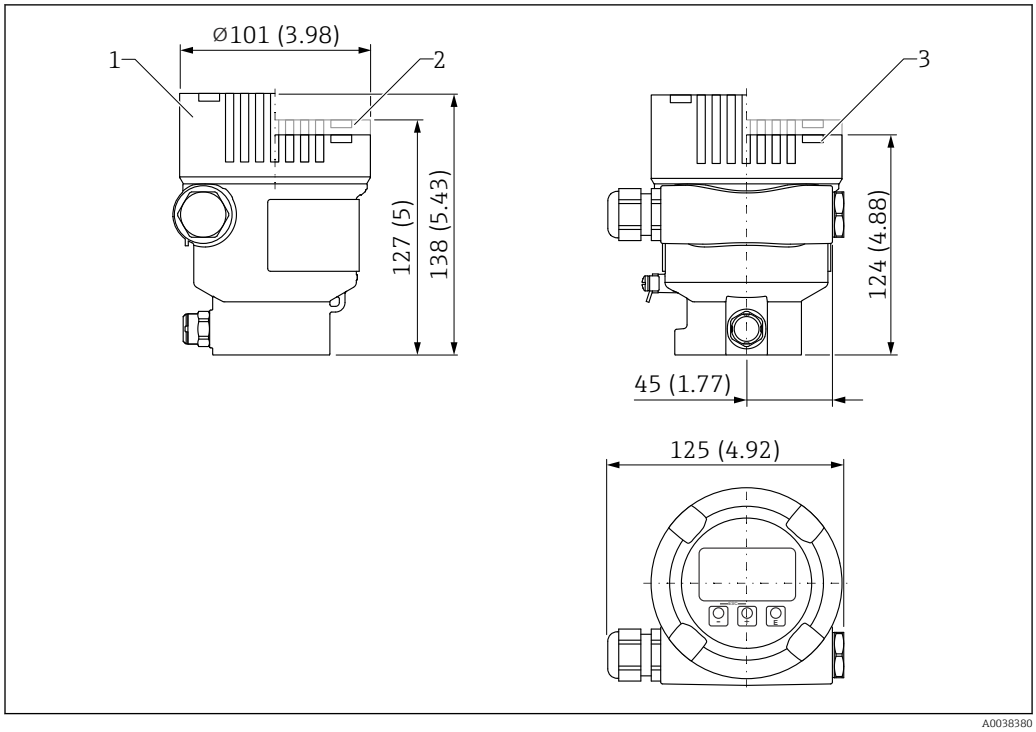

32 Dimensions of aluminum single compartment housing

1 Height with cover with glass viewing window (devices for Ex d, dust Ex)
2 Height with cover with plastic viewing window
3 Cover without viewing window

Dual compartment housing

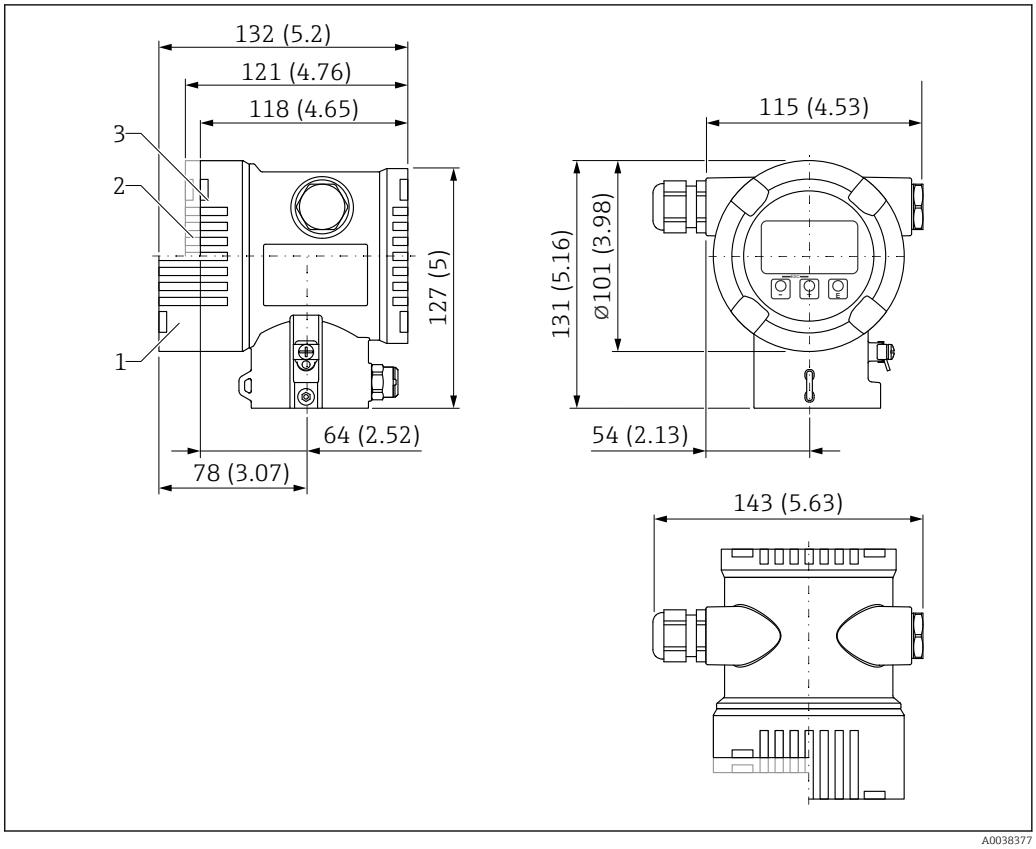

33 Dimensions of dual compartment housing

1 Height with cover with glass viewing window (devices for Ex d, dust Ex)
2 Height with cover with plastic viewing window
3 Cover without viewing window

Dual compartment housing, L-form

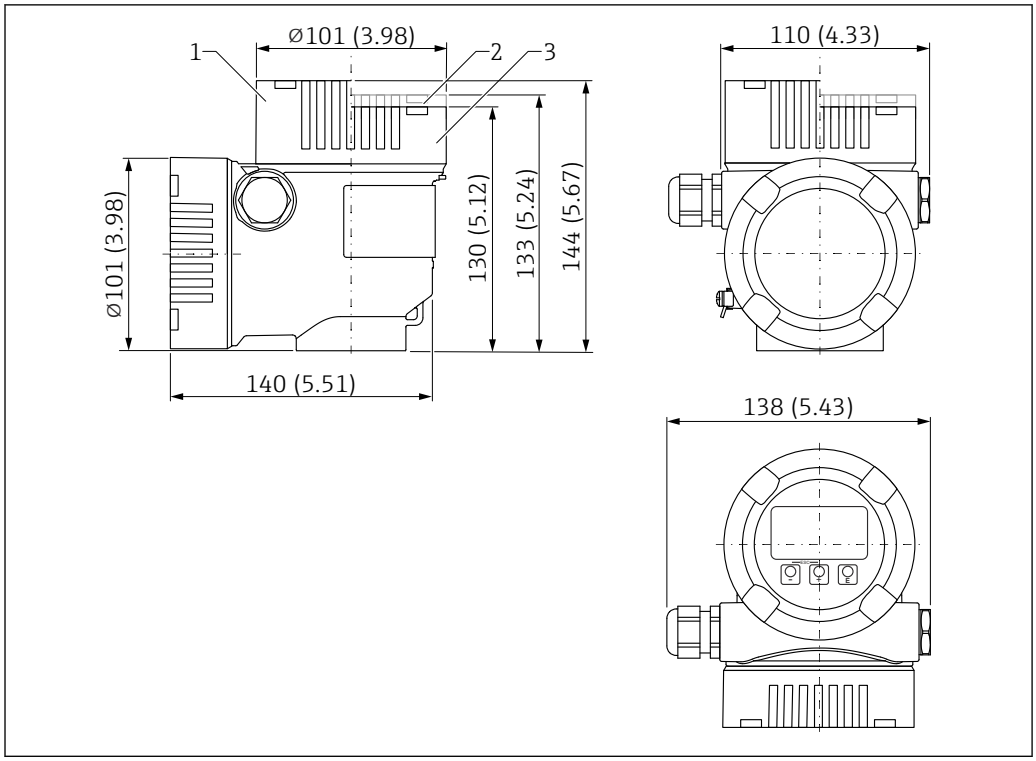

34 Dimensions of dual compartment housing, L-form

1 Height with cover with glass viewing window (devices for Ex d, dust Ex)
2 Height with cover with plastic viewing window
3 Cover without viewing window

Encapsulated antenna, PVDF, 40 mm (1.5 in)

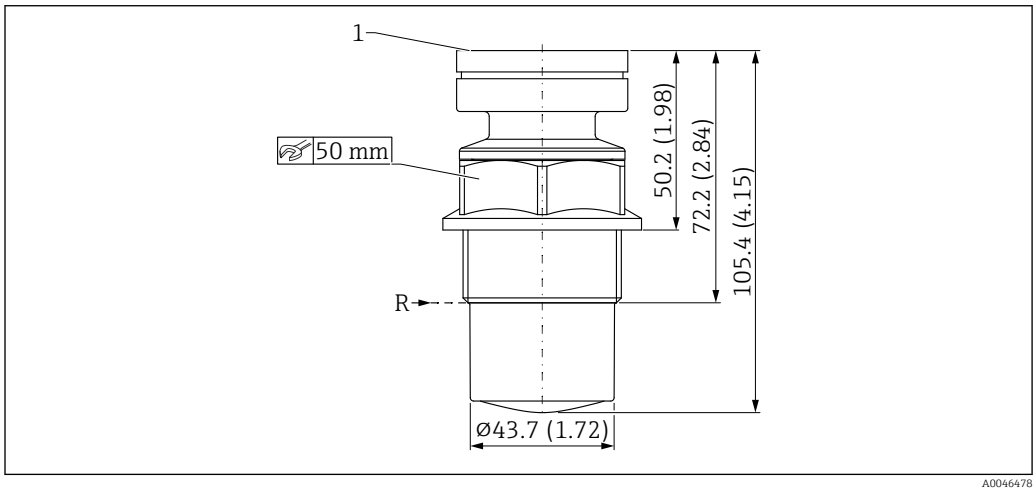

35 Dimensions of encapsulated antenna, PVDF, 40 mm (1.5 in). Unit of measurement mm (in)

R Reference point of measurement
1 Bottom edge of housing

Process connection:
- Thread ISO228 G1-1/2, PVDF
- Thread ANSI MNPT1-1/2, PVDF

Encapsulated antenna, PVDF, 40 mm (1.5 in), process connection UNI flange

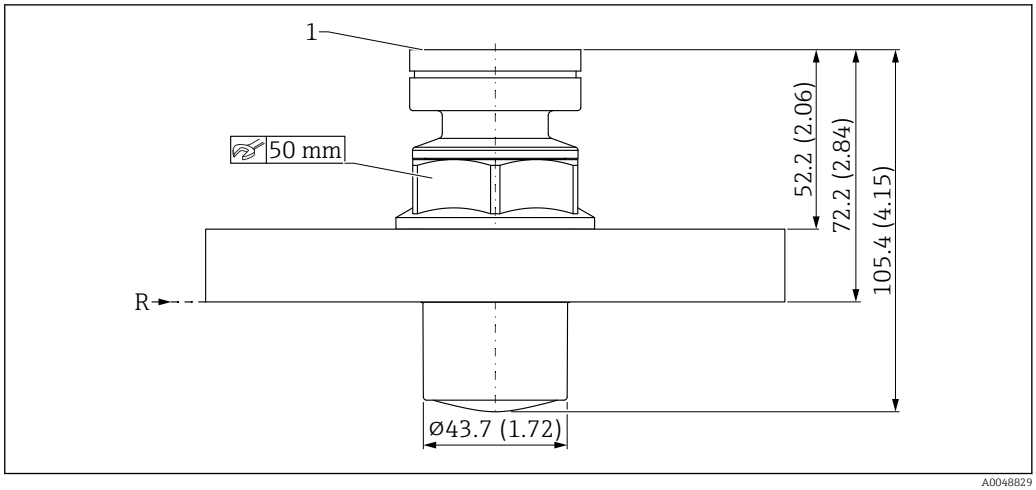

36 Dimensions of encapsulated antenna, PVDF, 40 mm (1.5 in), process connection UNI flange. Unit of measurement mm (in)

R Reference point of measurement
1 Bottom edge of housing

UNI flange 3"/DN80/80A

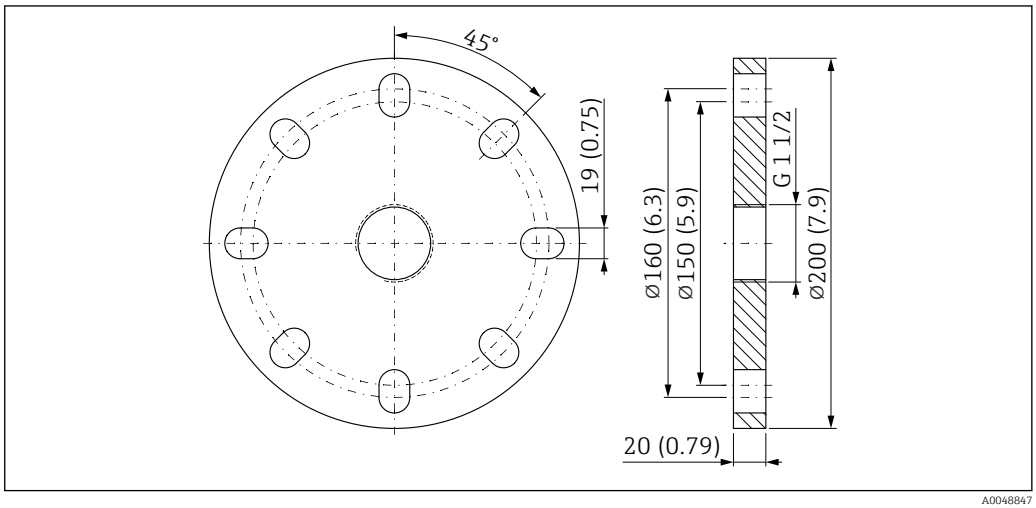

37 Dimensions of UNI flange 3"/DN80/80A. Unit of measurement mm (in)

Suitable for ASME B16.5, 3" 150lbs / EN1092-1; DN80 PN16 / JIS B2220; 10K 80A

Material:
PP, weight 0.50 kg (1.10 lb)

UNI flange 4"/DN100/100A

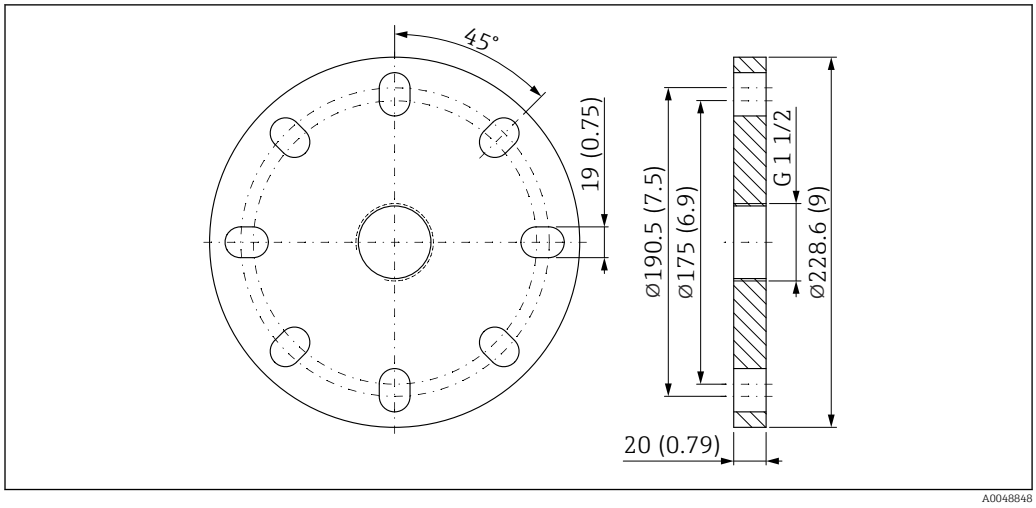

38 Dimensions of UNI flange 4"/DN100/100A. Unit of measurement mm (in)

Suitable for ASME B16.5, 4" 150lbs / EN1092-1; DN100 PN16 / JIS B2220; 10K 100A

Material:
PP, weight 0.70 kg (1.54 lb)

UNI flange 6"/DN150/150A

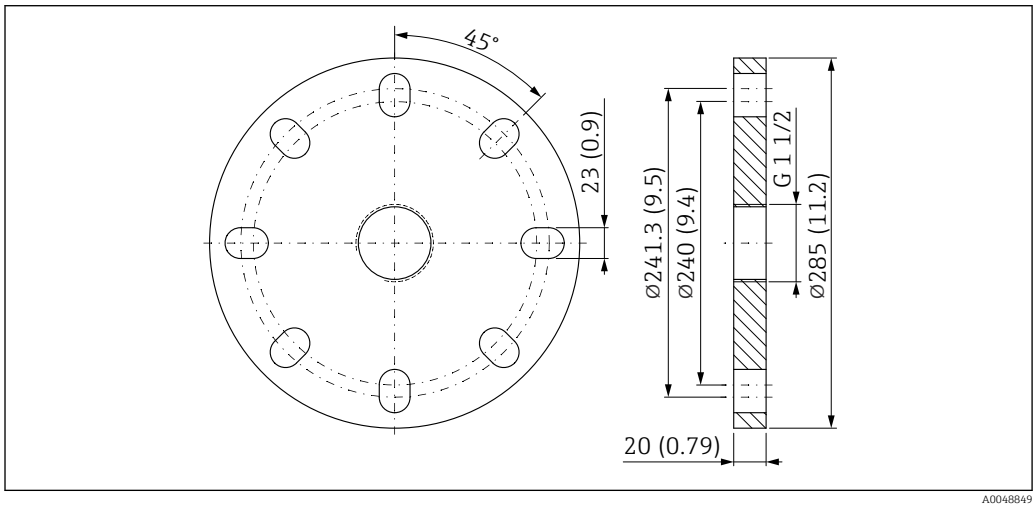

39 Dimensions of UNI flange 6"/DN150/150A. Unit of measurement mm (in)

Suitable for ASME B16.5, 6" 150lbs / EN1092-1; DN150 PN16 / JIS B2220; 10K 150A

Material:
PP, weight 1.00 kg (2.20 lb)

Drip-off antenna 50 mm (2 in), threaded process connection

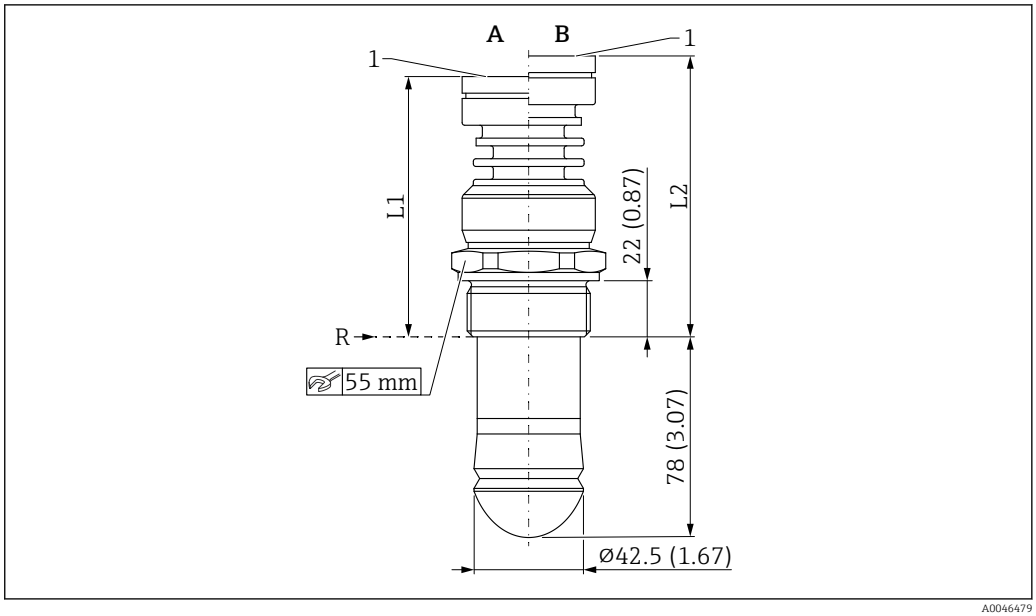

40 Dimensions of Drip-off antenna 50 mm (2 in), threaded process connection. Unit of measurement mm (in)

A Process temperature version ≤150 °C (302 °F)
B Process temperature version ≤200 °C (392 °F)
1 Bottom edge of housing
R Reference point of measurement
L1 97 mm (3.82 in); version with Ex d or XP approval +5 mm (+0.20 in)
L2 109 mm (4.29 in); version with Ex d or XP approval +5 mm (+0.20 in)

Drip-off antenna 50 mm (2 in), UNI flange process connection

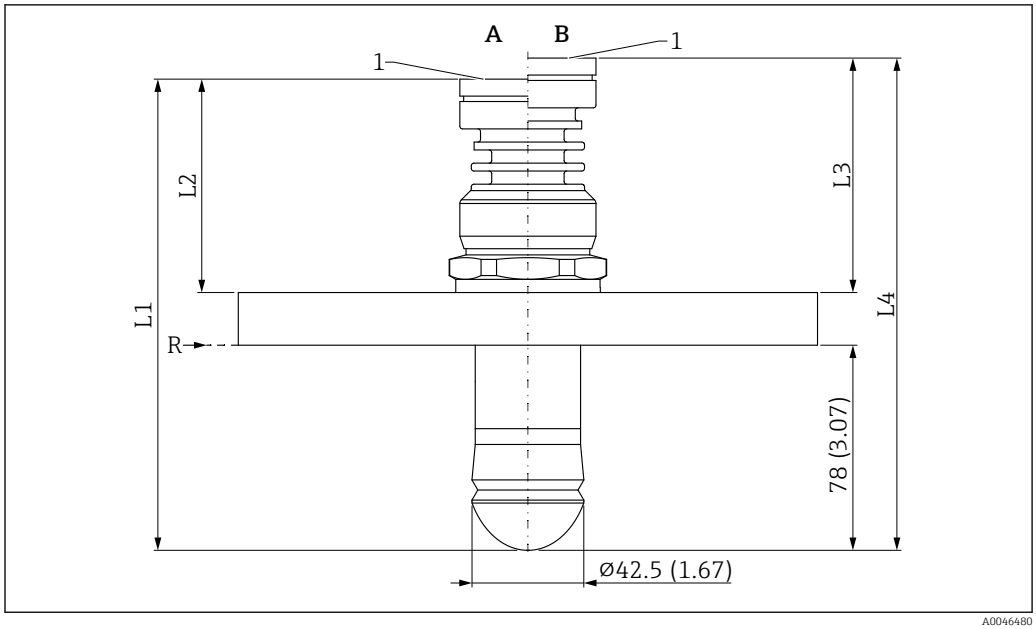

41 Dimensions of Drip-off antenna 50 mm (2 in), UNI flange process connection. Unit of measurement mm (in)

A Process temperature version ≤150 °C (302 °F)
B Process temperature version ≤200 °C (392 °F)
1 Bottom edge of housing
R Reference point of measurement
L1 175 mm (6.89 in); version with Ex d or XP approval +5 mm (+0.20 in)
L2 77 mm (3.03 in); version with Ex d or XP approval +5 mm (+0.20 in)
L3 89 mm (3.50 in); version with Ex d or XP approval +5 mm (+0.20 in)
L4 187 mm (7.36 in); version with Ex d or XP approval +5 mm (+0.20 in)

UNI flange 3"/DN80/80A

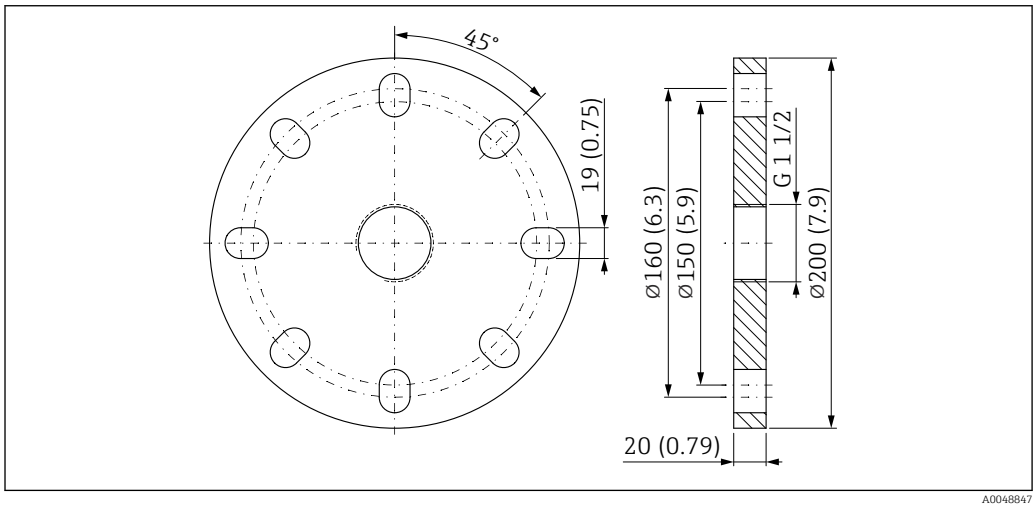

42 Dimensions of UNI flange 3"/DN80/80A. Unit of measurement mm (in)

Suitable for ASME B16.5, 3" 150lbs / EN1092-1; DN80 PN16 / JIS B2220; 10K 80A

Material:
- PP, weight 0.50 kg (1.10 lb)
- 316L, weight 4.3 kg (9.48 lb)

UNI flange 4"/DN100/100A

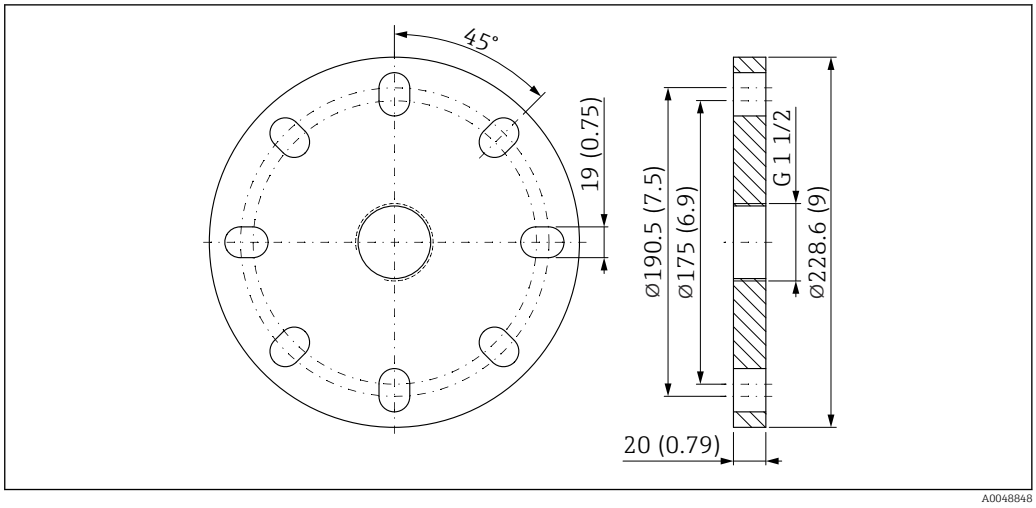

43 *Dimensions of UNI flange 4"/DN100/100A. Unit of measurement mm (in)*

Suitable for ASME B16.5, 4" 150lbs / EN1092-1; DN100 PN16 / JIS B2220; 10K 100A

Material:
- PP, weight 0.70 kg (1.54 lb)
- 316L, weight 5.80 kg (12.79 lb)

UNI flange 6"/DN150/150A

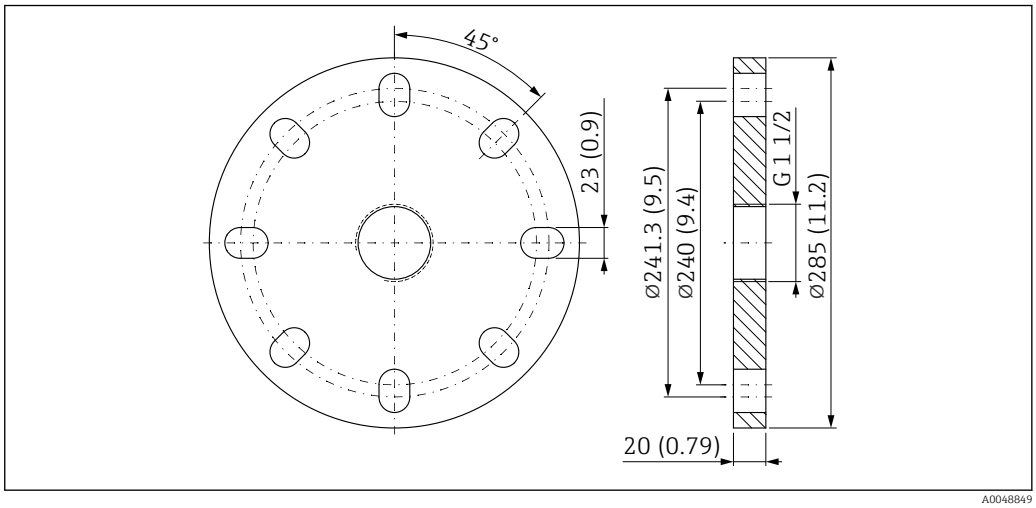

44 *Dimensions of UNI flange 6"/DN150/150A. Unit of measurement mm (in)*

Suitable for ASME B16.5, 6" 150lbs / EN1092-1; DN150 PN16 / JIS B2220; 10K 150A

Material:
- PP, weight 1.00 kg (2.20 lb)
- 316L, weight 9.30 kg (20.50 lb)

Integrated antenna, PEEK, 20 mm (0.75 in)

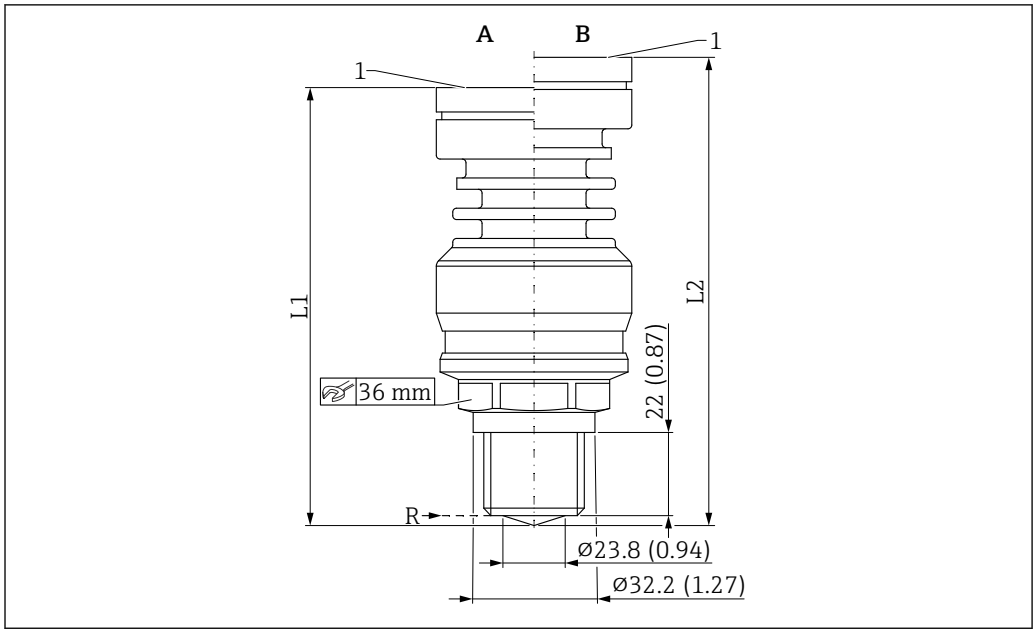

45 Dimensions; integrated antenna, PEEK, 20 mm (0.75 in); process connection, thread 3/4". Unit of measurement mm (in)

A Process temperature version ≤150 °C (302 °F)
B Process temperature version ≤200 °C (392 °F)
R Reference point of measurement
1 Bottom edge of housing
L1 112 mm (4.41 in); version with Ex d or XP approval +5 mm (+0.20 in)
L2 124 mm (4.88 in); version with Ex d or XP approval +5 mm (+0.20 in)

Integrated antenna, PEEK, 40 mm (1.5 in)

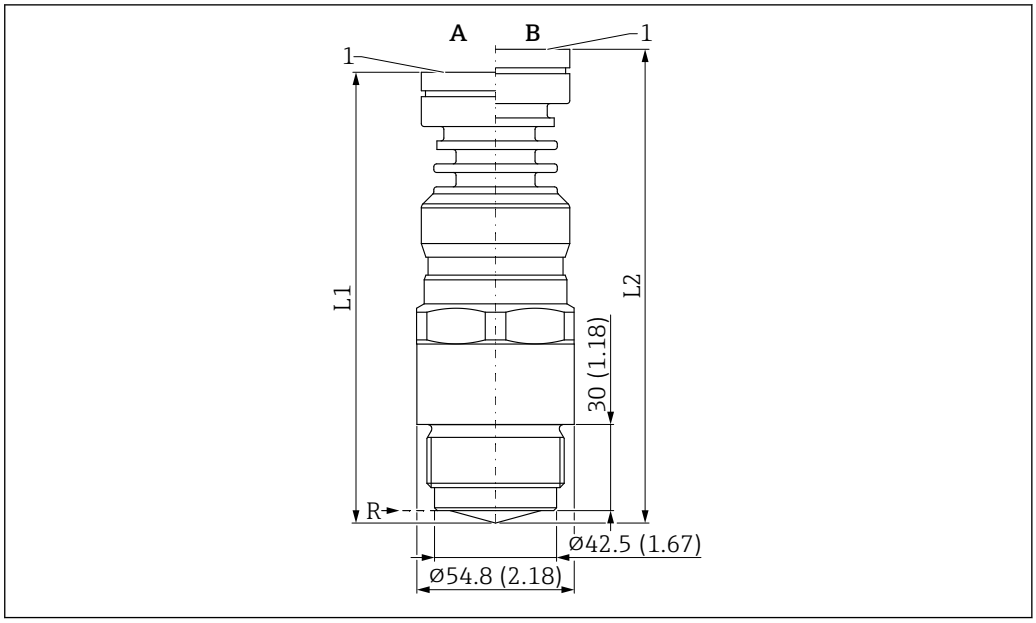

46 Dimensions; integrated antenna, PEEK, 40 mm (1.5 in); process connection, thread 1-1/2". Unit of measurement mm (in)

A Process temperature version ≤150 °C (302 °F)
B Process temperature version ≤200 °C (392 °F)
R Reference point of measurement
1 Bottom edge of housing
L1 153 mm (6.02 in); version with Ex d or XP approval +5 mm (+0.20 in)
L2 165 mm (6.50 in); version with Ex d or XP approval +5 mm (+0.20 in)

Weight

The weights of the individual components must be added together for the total weight.

Housing

Weight including electronics and display.

Single compartment housing
- Plastic: 0.8 kg (1.76 lb)
- Aluminum: 1.1 kg (2.43 lb)

Dual compartment housing
- Aluminum: 1.4 kg (3.09 lb)
- Stainless steel: 3.3 kg (7.28 lb)

Dual compartment housing, L-form
1.7 kg (3.75 lb)

Antenna and process connection adapter

The flange weight (316/316L) depends on the selected standard and sealing surface.

Details -> TI00426F or in the relevant standard

The heaviest version is indicated for the antenna weights

Encapsulated antenna, PVDF, 40 mm (1.5 in)
0.60 kg (1.32 lb)

Drip-off antenna 50 mm (2 in)
1.70 kg (3.75 lb)

Integrated antenna, PEEK, 20 mm (0.75 in)
1.10 kg (2.43 lb) + flange weight

Integrated antenna, PEEK, 40 mm (1.5 in)
1.90 kg (4.19 lb) + flange weight

Materials

Materials not in contact with process

Plastic housing

- Housing: PBT/PC
- Blind cover: PBT/PC
- Transparent cover: PA12
- Cover with viewing window: PBT/PC and PC
- Cover seal: EPDM
- Potential equalization: 316L
- Seal under potential equalization: EPDM
- Plug: PBT-GF30-FR
- M20 cable gland: PA
- Seal on plug and cable gland: EPDM
- Threaded adapter as replacement for cable glands: PA66-GF30
- Nameplate: plastic foil
- TAG plate: plastic foil, metal or provided by the customer

Aluminum housing, coated

- Housing: aluminum EN AC 44300
- Dummy cover: aluminum EN AC 44300
- Cover with sight glass: aluminum EN AC 44300, PC Lexan 943A synthetic glass
  Cover with polycarbonate sight glass optionally available. For Ex d applications, the sight glass is made from borosilicate.
- Cover seal materials: HNBR
- Cover seal materials: FVMQ (only for low temperature version)
- Nameplate: plastic foil
- TAG plate: plastic foil, stainless steel or provided by customer
- M20 cable glands: select material (stainless steel, nickel-plated brass, polyamide)

Stainless steel housing, cast

- Housing: stainless steel AISI 316L (1.4409)
- Cover: AISI 316L (1.4409)
- Cover sealing materials: FVMQ (in low temperature version only)
- Cover sealing materials: HNBR
- Nameplate: stainless steel 316L
- TAG plate: plastic foil, stainless steel or provided by the customer
- Cable glands M20: select material (stainless steel, nickel-plated brass, polyamide)

Materials in contact with the medium

Encapsulated antenna, PVDF, 40 mm (1.5 in)

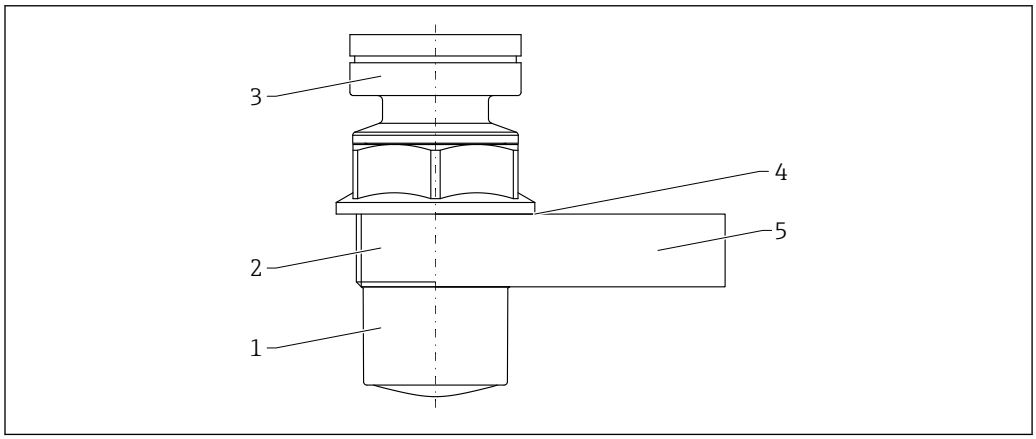

47 Material; encapsulated antenna, PVDF, 40 mm (1.5 in)

1 *Antenna, PVDF*
2 *Threaded process connection, PVDF*
3 *Housing adapter, PBT-GF30 (dust ignition-proof: 304/ 1.4301)*
4 *Synthetic/organic fiber elastomer seal (asbestos-free), FA material*
5 *UNI flange, PP*

Drip-off antenna 50 mm (2 in)

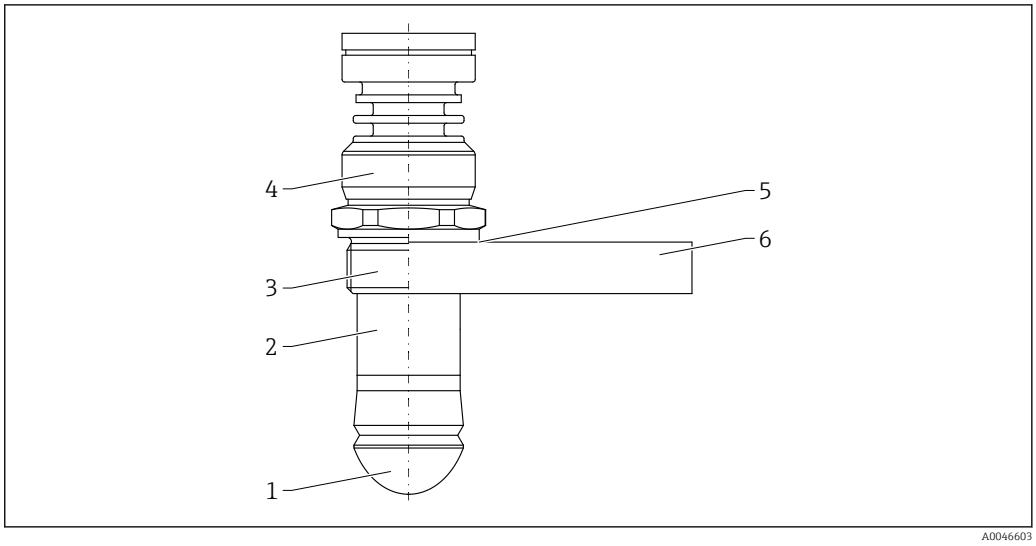

48 Material; Drip-off antenna 50 mm (2 in)

1. *Antenna: PTFE, seal material can be selected (order option)*
2. *Threaded sleeve: 316L / 1.4404*
3. *Process connection: 316L / 1.4404*
4. *Housing adapter: 316L / 1.4404*
5. *Synthetic/organic fiber elastomer seal (asbestos-free), FA material*
6. *UNI flange, material can be selected (order option)*

Integrated antenna, PEEK, 20 mm (0.75 in)

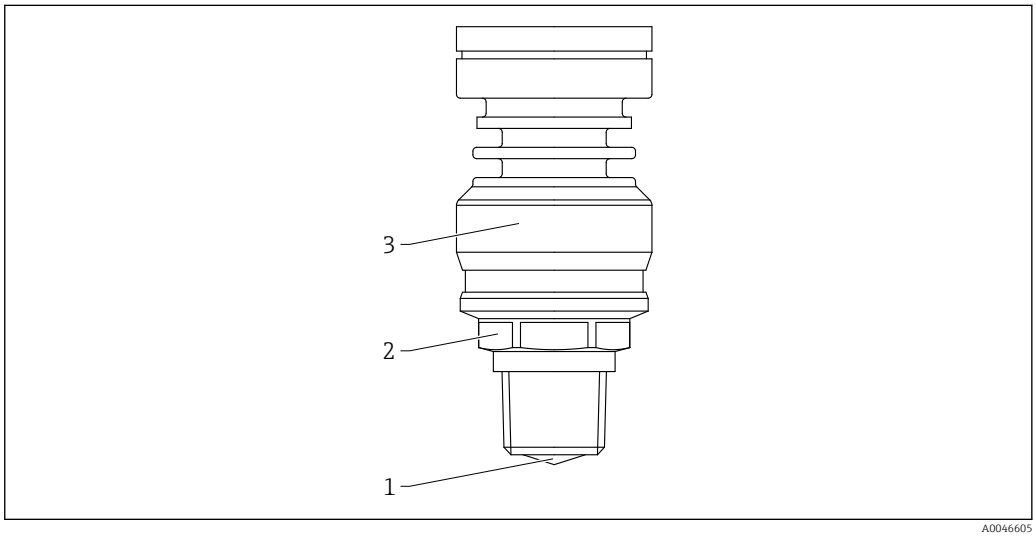

49 Material; integrated antenna, PEEK, 20 mm (0.75 in)

1. *Antenna: PEEK, seal material can be selected (order option)*
2. *Process connection: 316L / 1.4404*
3. *Housing adapter: 316L / 1.4404*

Integrated antenna, PEEK, 40 mm (1.5 in)

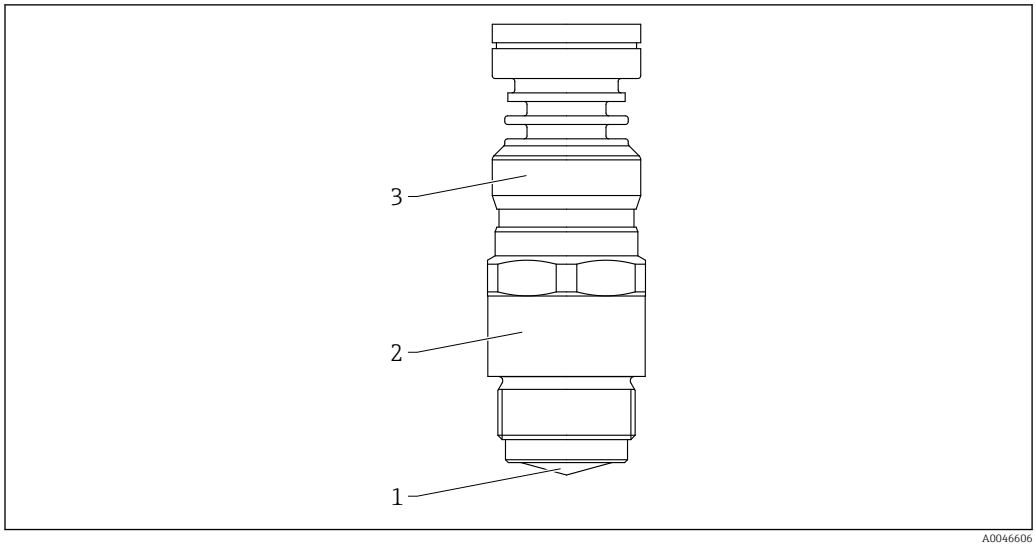

50 Material; integrated antenna, PEEK, 40 mm (1.5 in)

1 Antenna: PEEK, seal material can be selected (order option)
2 Process connection: 316L / 1.4404
3 Housing adapter: 316L / 1.4404

Operability

Operating concept

Operator-oriented menu structure for user-specific tasks
- Guidance
- Diagnostics
- Application
- System

Fast and safe commissioning
- Interactive wizard with graphical user interface for guided commissioning in FieldCare, DeviceCare or DTM, AMS and PDM-based third-party tools or SmartBlue
- Menu guidance with short explanations of the individual parameter functions
- Standardized operation at the device and in the operating tools

Integrated HistoROM data memory
- Adoption of data configuration when electronics modules are replaced
- Up to 100 event messages recorded in the device

Efficient diagnostic behavior increases measurement availability
- Remedial measures are integrated in plain text
- Diverse simulation options

Bluetooth (optionally integrated in local display)
- Quick and easy setup with SmartBlue app or PC with DeviceCare, version 1.07.05 and higher, or FieldXpert SMT70
- No additional tools or adapters required
- Encrypted single point-to-point data transmission (tested by Fraunhofer Institute) and password-protected communication via *Bluetooth*® wireless technology

Languages

Operating languages
- **English** option (**English** option is set at the factory if no other language is ordered)
- Deutsch
- Français
- Español
- Italiano
- Nederlands
- Portuguesa
- Polski

- русский язык (Russian)
- Türkçe
- 中文 (Chinese)
- 日本語 (Japanese)
- 한국어 (Korean)
- tiếng Việt (Vietnamese)
- čeština (Czech)
- Svenska

Local operation

Operating keys and DIP switches on the HART electronic insert

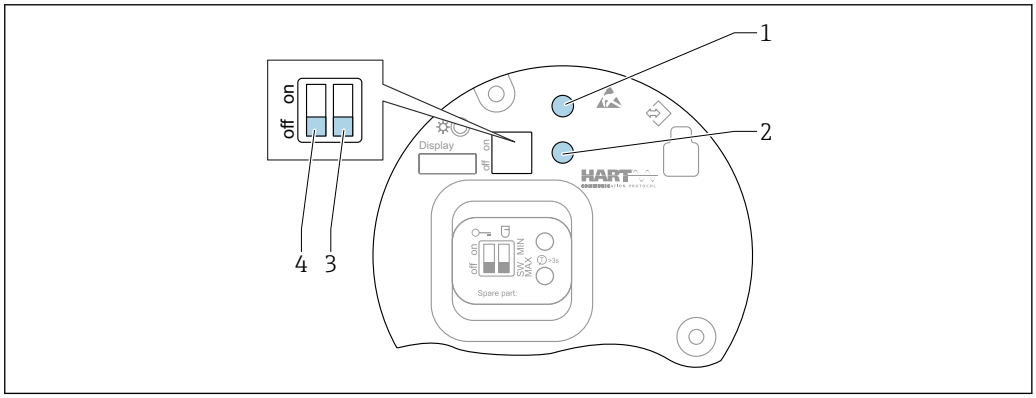

51 *Operating keys and DIP switches on the HART electronic insert*

1 Operating key for reset password (for Bluetooth login and Maintenance user role)
1+2 Operating keys for device reset (as-delivered state)
2 Operating key II (only for factory reset)
3 DIP switch for alarm current
4 DIP switch for locking and unlocking the device

The setting of the DIP switches on the electronic insert has priority over the settings made via other operation methods (e.g. FieldCare/DeviceCare).

Local display

Device display (optional)

Functions:
- Display of measured values and fault and notice messages
- Background lighting, which switches from green to red in the event of an error
- The device display can be removed for easier operation

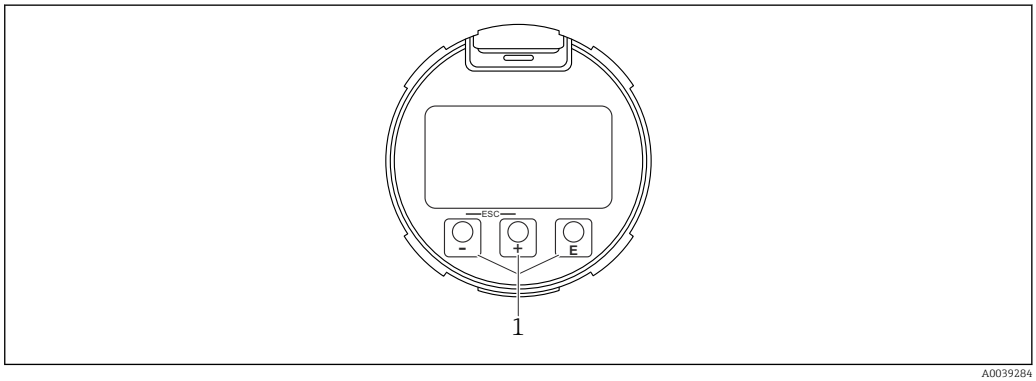

52 *Graphic display with optical operating keys (1)*

Remote operation

Via HART protocol

Via service interface (CDI)

Operation via Bluetooth® wireless technology (optional)

Prerequisite
- Measuring device with display including Bluetooth
- Smartphone or tablet with Endress+Hauser SmartBlue app or PC with DeviceCare from version 1.07.05 or FieldXpert SMT70

The connection has a range of up to 25 m (82 ft). The range can vary depending on environmental conditions such as attachments, walls or ceilings.

The operating keys on the display are locked as soon as the device is connected via Bluetooth.

System integration

HART

Version 7

Supported operating tools

Smartphone or tablet with Endress+Hauser SmartBlue app, DeviceCare from version 1.07.05, FieldCare, DTM, AMS and PDM

HistoROM data management

When replacing the electronic insert, the stored data is transferred by reconnecting the HistoROM.

The device serial number is saved in the HistoROM. The electronics serial number is saved in the electronics.

Certificates and approvals

Current certificates and approvals that are available for the product can be selected via the Product Configurator at www.endress.com:

1. Select the product using the filters and search field.
2. Open the product page.
3. Select **Configuration**.

CE mark

The measuring system meets the legal requirements of the applicable EU directives. These are listed in the corresponding EU Declaration of Conformity together with the standards applied.

The manufacturer confirms successful testing of the device by affixing to it the CE mark.

RoHS

The measuring system meets the substance restrictions of the Directive on the Restriction of the Use of Certain Hazardous Substances 2011/65/EU (RoHS 2) and the Delegated Directive (EU) 2015/863 (RoHS 3).

RCM marking

The supplied product or measuring system meets the ACMA (Australian Communications and Media Authority) requirements for network integrity, interoperability, performance characteristics as well as health and safety regulations. Here, especially the regulatory arrangements for electromagnetic compatibility are met. The products bear the RCM marking on the nameplate.

A0029561

Ex approvals

Additional safety instructions must be followed for use in hazardous areas. Please refer to the separate "Safety Instructions" (XA) document included in the delivery. Reference to the applicable XA can be found on the nameplate.

Explosion-protected smartphones and tablets

If used in hazardous areas, mobile end devices with an Ex approval must be used.

Functional safety

Use for level monitoring (MIN, MAX, range) up to SIL 3 (homogeneous or diverse redundancy), independently evaluated by TÜV Rheinland in accordance with IEC 61508, refer to the "Functional Safety Manual" for information.

Pressure equipment with allowable pressure ≤ 200 bar (2 900 psi)

Pressure instruments with a flange and threaded boss that do not have a pressurized housing do not fall within the scope of the Pressure Equipment Directive, irrespective of the maximum allowable pressure.

Reasons:

According to Article 2, point 5 of EU Directive 2014/68/EU, pressure accessories are defined as "devices with an operational function and having pressure-bearing housings".

If a pressure instrument does not have a pressure-bearing housing (no identifiable pressure chamber of its own), there is no pressure accessory present within the meaning of the Directive.

EN 302729 radio standard

Devices with following listed antennas are compliant with the radio standard EN 302729 for LPR (Level Probing Radar):
- Encapsulated antenna, PVDF, 40 mm (1.5 in)
- Drip-off antenna 50 mm (2 in)
- Integrated antenna, PEEK, 20 mm (0.75 in)
- Integrated antenna, PEEK, 40 mm (1.5 in)

The devices are approved for unrestricted use inside and outside closed containers in countries of the EU and the EFTA. As a prerequisite, the countries must have already implemented this standard.

The standard is already implemented in the following countries:

Belgium, Bulgaria, Germany, Denmark, Estonia, France, Greece, UK, Ireland, Iceland, Italy, Liechtenstein, Lithuania, Latvia, Malta, The Netherlands, Norway, Austria, Poland, Portugal, Romania, Sweden, Switzerland, Slovakia, Spain, Czech Republic and Cyprus.

Implementation is still underway in all of the countries not listed.

Please note the following for operation of the devices outside of closed vessels:

1. Installation must be carried out by properly trained, expert staff.
2. The device antenna must be installed in a fixed location pointing vertically downwards.
3. The installation site must be located at a distance of 4 km (2.49 mi) from the astronomy stations listed below or otherwise approval must be provided by the relevant authority. If a device is installed within a radius of 4 to 40 km (2.49 to 24.86 mi) around one of the listed stations, it must not be installed at a height of more than 15 m (49 ft) above the ground.

Astronomy stations

Country	Name of the station	Latitude	Longitude
Germany	Effelsberg	50° 31' 32" North	06° 53' 00" East
Finland	Metsähovi	60° 13' 04" North	24° 23' 37" East
	Tuorla	60° 24' 56" North	24° 26' 31" East
France	Plateau de Bure	44° 38' 01" North	05° 54' 26" East
	Floirac	44° 50' 10" North	00° 31' 37" West
Great Britain	Cambridge	52° 09' 59" North	00° 02' 20" East
	Damhall	53° 09' 22" North	02° 32' 03" West
	Jodrell Bank	53° 14' 10" North	02° 18' 26" West
	Knockin	52° 47' 24" North	02° 59' 45" West
	Pickmere	53° 17' 18" North	02° 26' 38" West
Italy	Medicina	44° 31' 14" North	11° 38' 49" East
	Noto	36° 52' 34" North	14° 59' 21" East

Country	Name of the station	Latitude	Longitude
	Sardinia	39° 29' 50" North	09° 14' 40" East
Poland	Fort Skala Krakow	50° 03' 18" North	19° 49' 36" East
Russia	Dmitrov	56° 26' 00" North	37° 27' 00" East
	Kalyazin	57° 13' 22" North	37° 54' 01" East
	Pushchino	54° 49' 00" North	37° 40' 00" East
	Zelenchukskaya	43° 49' 53" North	41° 35' 32" East
Sweden	Onsala	57° 23' 45" North	11° 55' 35" East
Switzerland	Bleien	47° 20' 26" North	08° 06' 44" East
Spain	Yebes	40° 31' 27" North	03° 05' 22" West
	Robledo	40° 25' 38" North	04° 14' 57" West
Hungary	Penc	47° 47' 22" North	19° 16' 53" East

As a general rule, the requirements outlined in EN 302729 must be observed.

EN 302372 radio standard

The devices comply with the TLPR (Tanks Level Probing Radar) radio standard EN 302372 and are permitted for use in closed vessels. Points a to f in Annex E of EN 302372 must be observed for the installation.

FCC

This device complies with Part 15 of the FCC rules. Operation is subject to the following two conditions: (1) This device may not cause harmful interference, and (2) this device must accept any interference received, including interference that may cause undesired operation.

[Any] changes or modifications not expressly approved by the party responsible for compliance could void the user's authority to operate the equipment.

The devices are compliant with the FCC Code of Federal Regulations, CFR 47, Part 15, Sections 15.205, 15.207, 15.209.

In addition, the devices with following listed antennas are compliant with Section 15.256:
- Encapsulated antenna, PVDF, 40 mm (1.5 in)
- Drip-off antenna 50 mm (2 in)
- Integrated antenna, PEEK, 20 mm (0.75 in)
- Integrated antenna, PEEK, 40 mm (1.5 in)

For these LPR (Level Probe Radar) applications the devices must be professionally installed in a downward operating position. In addition, the devices are not allowed to be mounted in a zone of 4 km (2.49 mi) around RAS stations and within a radius of 40 km (24.86 mi) around RAS stations the maxium operation height of devices is 15 m (49 ft) above ground.

Industry Canada

Canada CNR-Gen Section 7.1.3

This device complies with Industry Canada licence-exempt RSS standard(s). Operation is subject to the following two conditions: (1) This device may not interference, and (2) this device must accept any interference, including interference that may cause undesired operation of the device.

Le présent appareil est conforme aux CNR d'Industrie Canada applicables aux appareils radio exempts de licence. L'exploitation est autorisée aux deux conditions suivantes : (1) l'appareil ne doit pas produire de brouillage, et (2) l'utilisateur de l'appareil doit accepter tout brouillage radioélectrique subi, même si le brouillage est susceptible d'en compromettre le fonctionnement.

[Any] changes or modifications not expressly approved by the party responsible for compliance could void the user's authority to operate the equipment.

- The installation of the LPR/TLPR device shall be done by trained installers, in strict compliance with the manufacturer's instructions.
- The use of this device is on a "no-interference, no-protection" basis. That is, the user shall accept operations of high-powered radar in the same frequency band which may interfere with or damage this device. However, devices found to interfere with primary licensing operations will be required to be removed at the user's expense.
- This device shall be installed and operated in a completely enclosed container to prevent RF emissions, which can otherwise interfere with aeronautical navigation.
- The installer/user of this device shall ensure that it is at least 10 km from the Dominion Astrophysical Radio Observatory (DRAO) near Penticton, British Columbia. The coordinates of the DRAO are latitude 49°19′15″ N and longitude 119°37′12″ W. For devices not meeting this 10 km separation (e.g., those in the Okanagan Valley, British Columbia,) the installer/user must coordinate with, and obtain the written concurrence of, the Director of the DRAO before the equipment can be installed or operated. The Director of the DRAO may be contacted at 250-497-2300 (tel.) or 250-497-2355 (fax). (Alternatively, the Manager, Regulatory Standards Industry Canada, may be contacted.)

- The Model FMR60B fulfills the requirements for use as LPR (Level Probe Radar).
- The Model FMR60BT is a submodel of the FMR60B that fullfills the requirements for use as TLPR (Tank Level Probe Radar).

Other standards and guidelines

- EN 60529
  Degrees of protection provided by enclosures (IP code)
- EN 61010-1
  Safety requirements for electrical equipment for measurement, control and laboratory use
- IEC/EN 61326
  Emission in accordance with Class A requirements A; Electromagnetic compatibility (EMC requirements)
- NAMUR NE 21
  Electromagnetic compatibility (EMC) of industrial process and laboratory control equipment
- NAMUR NE 43
  Standardization of the signal level for the breakdown information of digital transmitters with analog output signal
- NAMUR NE 53
  Software of field devices and signal-processing devices with digital electronics
- NAMUR NE 107
  Status categorization in accordance with NE 107
- NAMUR NE 131
  Requirements for field devices for standard applications
- IEC 61508
  Functional safety of safety-related electric/electronic/programmable electronic systems

Ordering information

Detailed ordering information is available from your nearest sales organization www.addresses.endress.com or in the Product Configurator at www.endress.com:

1. Select the product using the filters and search field.
2. Open the product page.
3. Select **Configuration**.

Product Configurator - the tool for individual product configuration

- Up-to-the-minute configuration data
- Depending on the device: Direct input of measuring point-specific information such as measuring range or operating language
- Automatic verification of exclusion criteria
- Automatic creation of the order code and its breakdown in PDF or Excel output format
- Ability to order directly in the Endress+Hauser Online Shop

Calibration

Factory calibration certificate

The points of the linearity protocol are spread evenly over the measuring range (0 to 100 %). The Empty calibration **E** and Full calibration **F** must be specified to define the measuring range. If this information is missing, antenna-dependent default values are used instead.

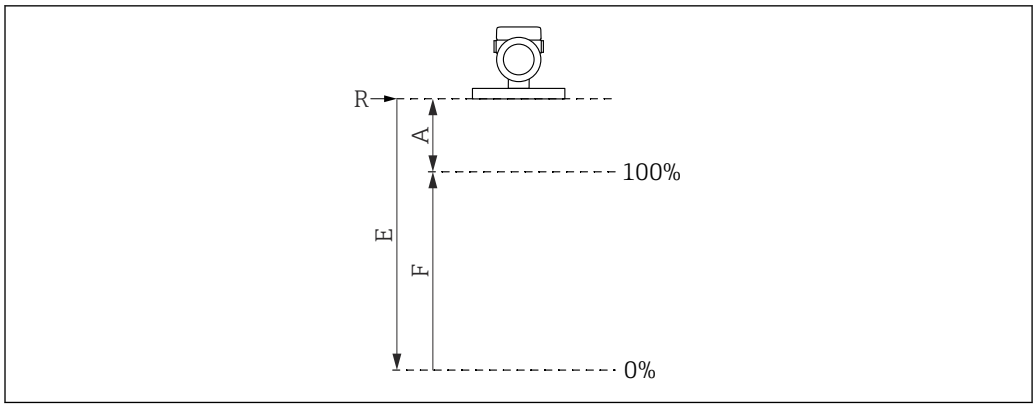

A0032643

R Reference point of measurement
A Minimum distance between reference point R and 100% mark
E Empty calibration
F Full calibration

Measuring range restrictions
The following restrictions must be considered when selecting **E** and **F**:
- Minimum distance between reference point **R** and **100%** mark
  A ≥ antenna length + 200 mm (8 in)
  Minimum value: 400 mm (16 in)
- Minimum span
  F ≥ 400 mm (16 in)
- Maximum value for Empty calibration
  E ≤ 30 m (98 ft)

- The linearity check is performed under reference operating conditions.
- The selected values for Empty calibration and Full calibration are only used to create the linearity protocol. Afterwards, the values are reset to the default values specific for the antenna. If values other than the default values are required, they must be ordered as a customized empty/full calibration.

Service

Services that can be selected via the product structure in the Product Configurator include:

- Cleaned of oil+grease (wetted)
- PWIS-free (paint-wetting impairment substances)
- ANSI Safety Red coating, coated housing cover
- Set damping
- Set HART Burst Mode PV
- Set max. alarm current
- Customized empty/full calibration
- Product documentation on paper
  A printed (hard copy) version of test reports, declarations and inspection certificates can optionally be ordered via the **Service** feature, **Product documentation on paper** option. The documents can be selected via the **Test, certificate, declaration** feature are then provided with the device upon delivery.

Test, certificate, declaration

All test reports, declarations and inspection certificates are provided electronically in the *Device Viewer*:
Enter the serial number from the nameplate (www.endress.com/deviceviewer)

Marking

Measuring point (TAG)

The device can be ordered with a tag name.

Location of tag name
Select in the additional specification:
- Stainless steel wired-on tag plate
- Paper adhesive label
- TAG provided by the customer
- RFID TAG
- RFID TAG + stainless steel wired-on tag plate

- RFID TAG + paper adhesive label
- RFID TAG + TAG provided by the customer
- DIN91406 stainless steel TAG
- DIN91406 stainless steel TAG + NFC TAG
- DIN91406 stainless steel TAG, stainless steel TAG
- DIN91406 stainless steel TAG + NFC, stainless steel TAG
- DIN91406 stainless steel TAG, plate supplied
- DIN91406 stainless steel TAG + NFC, plate supplied

Definition of tag name
Specify in the additional specification:
3 lines with a maximum of 18 characters per line
The specified tag name appears on the selected plate and/or on the RFID TAG.

Presentation in the SmartBlue app
The first 32 characters of the tag name
The tag name can always be changed specifically for the measuring point via Bluetooth.

Application packages

Heartbeat Technology

The Heartbeat Technology application package offers diagnostic functionality through continuous self-monitoring, the transmission of additional measured variables to an external Condition Monitoring system and the in-situ verification of devices in the application.

The application package can be ordered together with the device or can be activated subsequently with an activation code. Detailed information on the order code is available via the Endress+Hauser website www.endress.com or from your local Endress+Hauser Sales Center.

Heartbeat Verification

Heartbeat Verification uses the self-monitoring function of the devices to check the device functionality. During verification, the system checks whether the device components comply with the factory specifications. Both the sensor and the electronics modules are included in the tests.

Heartbeat Verification confirms on demand that the device is functioning within the specified measuring tolerance with a total test coverage TTC (Total Test Coverage) specified as a percentage.

Heartbeat Verification meets the requirements for measurement traceability in accordance with ISO 9001 (ISO9001:2015 Section 7.1.5.2).

The result of the verification is Passed or Failed. The verification data is saved in the device and optionally archived on a PC with the FieldCare asset management software. Based on this data, a verification report is generated automatically to ensure the traceable documentation of the verification results.

Heartbeat Monitoring

Wizards for loop diagnostics and Process window are available. In addition, other monitoring parameters can be output for use in predictive maintenance or application optimization.

"Loop diagnostics" wizard

Using this wizard, changes in the current-voltage loop characteristics (baseline) can be used to detect unwanted installation anomalies such as creep currents caused by terminal corrosion or a deteriorating power supply that can lead to an incorrect 4-20 mA measured value.

Areas of application

- Detection of changes in the measuring circuit resistance due to anomalies
  Examples: Contact resistance or leakage currents in wiring, terminals or grounding due to corrosion and/or moisture
- Detection of faulty power supply

"Foam detection" wizard

This wizard configures the automatic foam detection.

Foam detection can be linked to a output variable or status information e.g. to control a sprinkler used to dissolve the foam. It is also possible to monitor the foam increase in a so called foam index. The foam index can also be linked to a output variable and can be shown on the display.

Preparation:
The Foam monitoring initialization should only be done without or less foam.

Areas of application

- Measurement in liquids
- Reliable detection of foam on the medium

"Build-up detection" wizard

This wizard configures the build-up detection.

Basic idea:
The build-up detection can, for example, be linked to a compressed-air system to clean the antenna. With the build-up monitoring the maintenance cycles can be optimized.

Preparation:
The build-up monitoring initialization should only be done without or less build-up.

Areas of application

- Measurement in liquids and solids
- Reliable detection of buildup on the antenna

Detailed description

Special Documentation SD02953F

Accessories

Weather protection cover 316L

The weather protection cover can be ordered together with the device via the "Accessory enclosed" product structure.

It is used to protect against direct sunlight, precipitation and ice.

Weather protection cover 316L is suitable for the dual compartment housing made of aluminum or 316L. The delivery includes the holder for direct mounting on the housing.

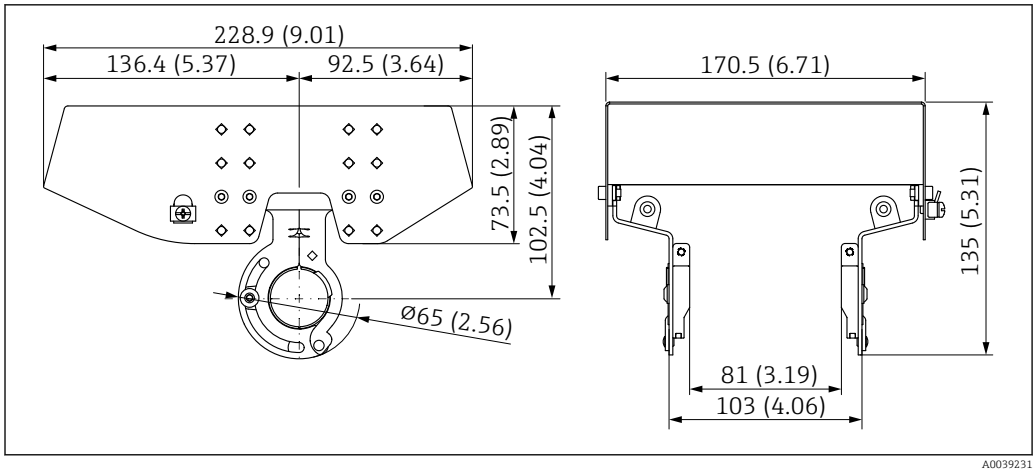

53 Dimensions. Unit of measurement mm (in)

Material
- Weather protection cover: 316L
- Clamping screw: A4
- Holder: 316L

Order number for accessories:
71438303

Plastic weather protection cover

The weather protection cover can be ordered together with the device via the "Accessory enclosed" product structure.

It is used to protect against direct sunlight, precipitation and ice.

The plastic weather protection cover is suitable for the single compartment housing made of aluminum. The delivery includes the holder for direct mounting on the housing.

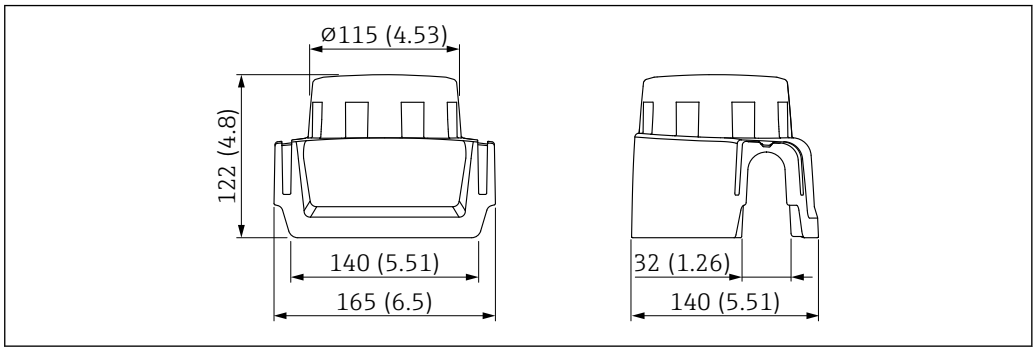

54 *Dimensions. Unit of measurement mm (in)*

Material
Plastic

Order number for accessories:
71438291

Mounting bracket, adjustable

The device can be mounted on a wall or ceiling with the mounting bracket.

The device can be aligned with the product surface with the swivel function.

The mounting bracket can be ordered together with the device via the product structure "Accessory enclosed".

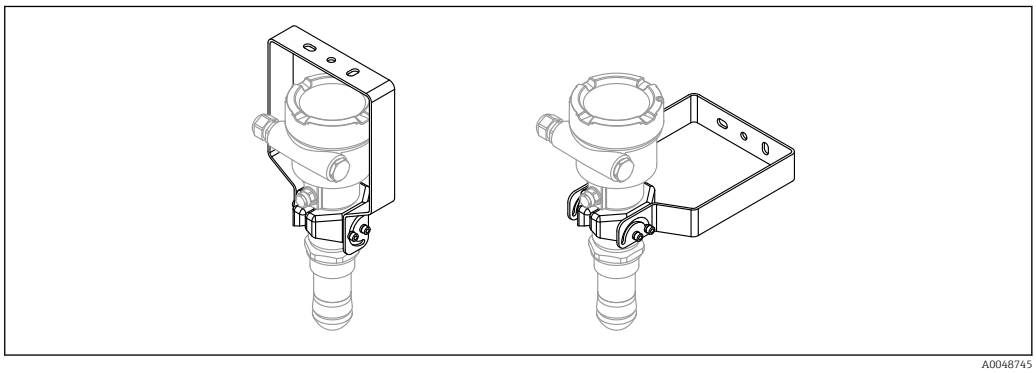

55 *Ceiling or wall mounting*

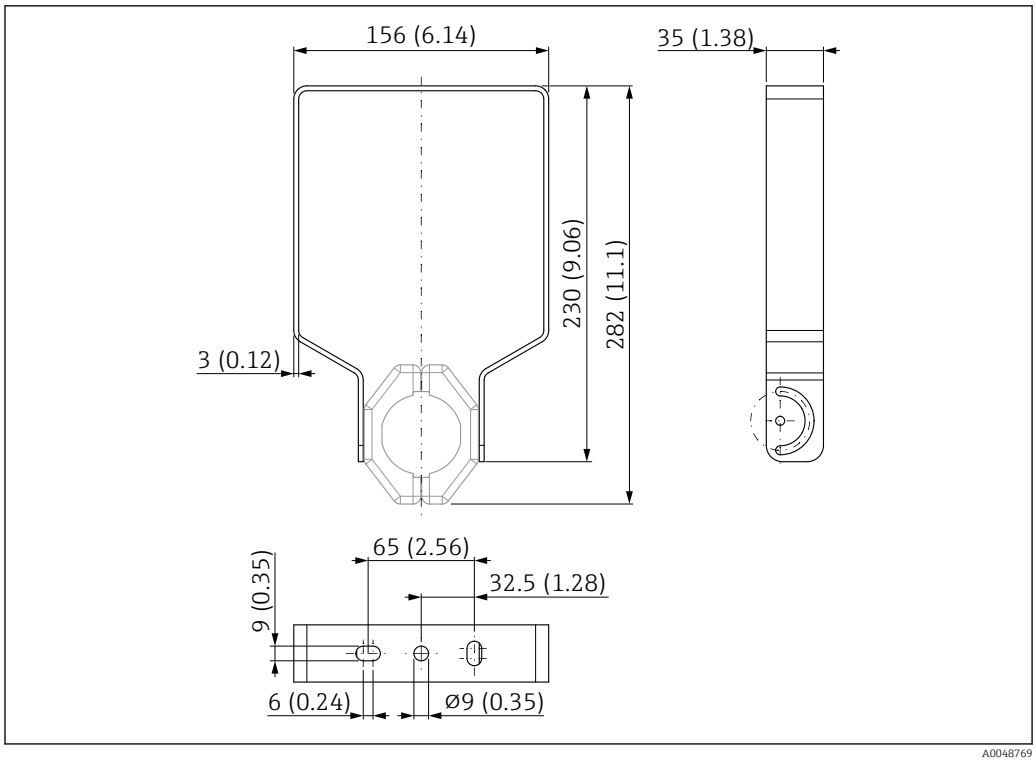

56 *Dimensions of mounting bracket. Unit of measurement mm (in)*

Scope of delivery:
- 1 × mounting bracket, 316L (1.4404)
- 2 × holder, 316L (1.4404)
- 6 × screws, A4
- 4 × lock washer, A4

Suitable for device with:
- Single compartment housing
- Dual compartment housing, L-form

and:
- Encapsulated antenna, PVDF, 40 mm (1.5 in)
- Drip-off antenna 50 mm (2 in), threaded process connection

FMR6xB mounting device **order number:** 71523849

There is **no** conductive connection between the mounting bracket and the transmitter housing. The bracket should be included in local potential equalization to prevent any electrostatic charge.

Fasten only to stable materials (e.g. metal, brick, concrete) with suitable fastening fixtures (provided by the customer).

M12 socket

M12 socket, straight
- Material:
  Body: PBT; union nut: nickel-plated die-cast zinc; seal: NBR
- Degree of protection (fully locked): IP67
- Pg coupling: Pg7
- Order number: 52006263

M12 socket, angled
- Material:
  Body: PBT; union nut: nickel-plated die-cast zinc; seal: NBR
- Degree of protection (fully locked): IP67
- Pg coupling: Pg7
- Order number: 71114212

M12 socket, angled, 5 m (16 ft) cable
- M12 socket material:
  - Body: TPU
  - Union nut: nickel-plated die-cast zinc
- Cable material:
  PVC
- Cable Li Y YM 4×0.34 mm^2 (20 AWG)
- Cable colors
  - 1 = BN = brown
  - 2 = WH = white
  - 3 = BU = blue
  - 4 = BK = black
- Order number: 52010285

Remote display FHX50B

The remote display is ordered via the Product Configurator.

If the remote display is to be used, the device version **Prepared for display FHX50B** must be ordered.

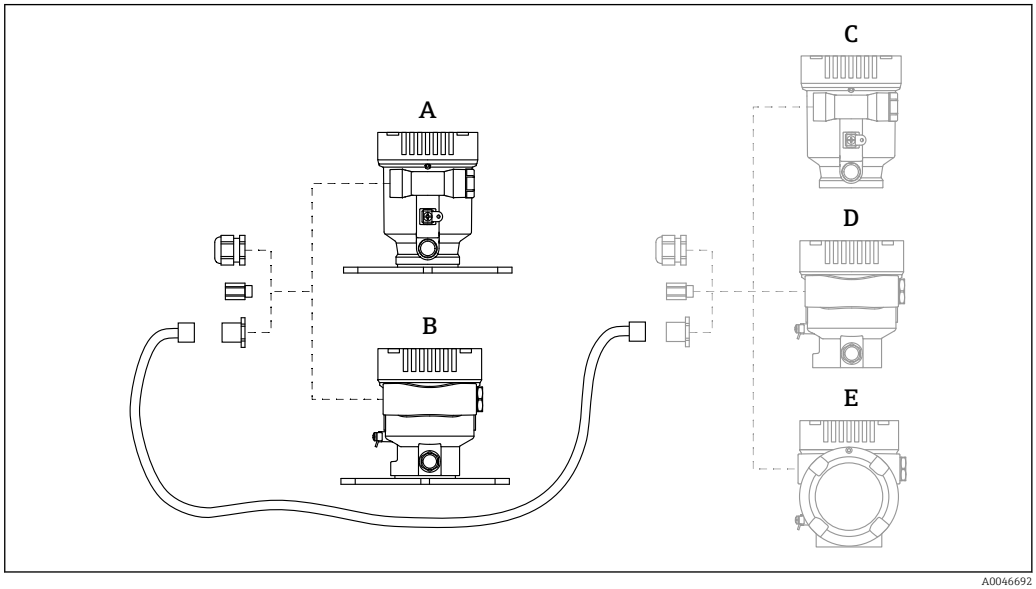

A Plastic single compartment housing, remote display
B Aluminum single compartment housing, remote display
C Device side, plastic single compartment housing prepared for remote display
D Device side, aluminum single compartment housing prepared for remote display
E Device side, dual compartment housing, L-form, prepared for remote display

Material of single compartment housing, remote display
- Aluminum
- Plastic

Degree of protection:
- IP68 / NEMA 6P
- IP66 / NEMA 4x

Connecting cable:
- Connecting cable (option) up to 30 m (98 ft)
- Standard cable provided by customer onsite up to 60 m (196 ft)

Ambient temperature:
- −40 to +80 °C (−40 to +176 °F)
- Option: −50 to +80 °C (−58 to +176 °F)

Gas-tight feedthrough

The chemically inert glass feedthrough which prevents gases from entering the electronics housing is optionally available and can be ordered as a "Mounted accessory" via the product structure.

Commubox FXA195 HART	For intrinsically safe HART communication with FieldCare via the USB interface For details, see "Technical Information" TI00404F
HART Loop Converter HMX50	Is used to evaluate and convert dynamic HART process variables to analog current signals or limit values. **Order number:** 71063562 For details, see "Technical Information" TI00429F and Operating Instructions BA00371F
FieldPort SWA50	Intelligent Bluetooth® and/or WirelessHART adapter for all HART field devices For details, see "Technical Information" TI01468S
Wireless HART adapter SWA70	The WirelessHART adapter is used for the wireless connection of field devices. It can be easily integrated into field devices and existing infrastructures, offers data protection and transmission safety and can be operated in parallel with other wireless networks. For details, see Operating Instructions BA00061S
Fieldgate FXA42	Fieldgates enable communication between connected 4 to 20 mA, Modbus RS485 and Modbus TCP devices and SupplyCare Hosting or SupplyCare Enterprise. The signals are transmitted either via Ethernet TCP/IP, WLAN or mobile communications (UMTS). Advanced automation capabilities are available, such as an integrated Web-PLC, OpenVPN and other functions. For details, see "Technical Information" TI01297S and Operating Instructions BA01778S.
Field Xpert SMT70	Universal, high-performance tablet PC for device configuration in Ex Zone 2 and non-Ex areas For details, see "Technical Information" TI01342S
DeviceCare SFE100	Configuration tool for HART, PROFIBUS and FOUNDATION Fieldbus field devices Technical Information TI01134S
FieldCare SFE500	FDT-based plant asset management tool It can configure all smart field units in your system and helps you manage them. By using the status information, it is also a simple but effective way of checking their status and condition. Technical Information TI00028S
Memograph M	The Memograph M graphic data manager provides information on all the relevant process variables. Measured values are recorded correctly, limit values are monitored and measuring points analyzed. The data are stored in the 256 MB internal memory and also on an SD card or USB stick. Technical Information TI00133R and Operating Instructions BA00247R
RN42	Single-channel active barrier with wide-range power supply for safe electrical isolation of 4 to 20 mA standard signal circuits, HART transparent. Technical Information TI01584K and Operating Instructions BA02090K

Documentation

For an overview of the scope of the associated Technical Documentation, refer to the following:
- *W@M Device Viewer* (www.endress.com/deviceviewer): Enter the serial number from the nameplate
- *Endress+Hauser Operations App*: Enter the serial number from the nameplate or scan the matrix code on the nameplate

Document function

Document type	Purpose and content of the document
Technical Information (TI)	**Planning aid for your device** The document contains all the technical data on the device and provides an overview of the accessories and other products that can be ordered for the device.
Brief Operating Instructions (KA)	**Guide that takes you quickly to the 1st measured value** The Brief Operating Instructions contain all the essential information from incoming acceptance to initial commissioning.
Operating Instructions (BA)	**Your reference guide** These Operating Instructions contain all the information that is required in the various life cycle phases of the device: from product identification, incoming acceptance and storage, to mounting, connection, operation and commissioning, through to troubleshooting, maintenance and disposal.
Description of Device Parameters (GP)	**Reference for your parameters** The document provides a detailed explanation of each individual parameter. The description is aimed at those who work with the device over the entire life cycle and perform specific configurations.
Safety Instructions (XA)	Depending on the approval, safety instructions for electrical equipment in hazardous areas are also supplied with the device. They are an integral part of the Operating Instructions. The nameplate indicates which Safety Instructions (XA) apply to the device in question.
Supplementary device-dependent documentation	Additional documents are supplied depending on the device version ordered: Always comply strictly with the instructions in the supplementary documentation. The supplementary documentation is an integral part of the device documentation.

Registered trademarks

HART®
Registered trademark of the FieldComm Group, Austin, Texas, USA

Bluetooth®
The *Bluetooth®* word mark and logos are registered trademarks owned by the Bluetooth SIG, Inc. and any use of such marks by Endress+Hauser is under license. Other trademarks and trade names are those of their respective owners.

Apple®
Apple, the Apple logo, iPhone, and iPod touch are trademarks of Apple Inc., registered in the U.S. and other countries. App Store is a service mark of Apple Inc.

Android®
Android, Google Play and the Google Play logo are trademarks of Google Inc.

KALREZ®, VITON®
Registered trademarks of DuPont Performance Elastomers L.L.C., Wilmington, DE USA

unbekannt

www.addresses.endress.com

Endress+Hauser

People for Process Automation