Technical Information
Micropilot FMR67

Free space radar

Level measurement in bulk solids

Application

- Continuous, non-contact level measurement of bulk solids ranging from powdery to lumpy
- PTFE drip-off antenna or PTFE-plated, flush-mounted antenna
- Maximum measuring range: 125 m (410 ft)
- Temperature: −40 to +200 °C (−40 to +392 °F)
- Pressure: −1 to +16 bar (−14.5 to +232 psi)
- Accuracy: ± 3 mm (0.12 in)
- International explosion protection certificates
- Linearity protocol (3-point, 5-point)

Your benefits

- Innovative drip-off antenna made of PTFE for maximum system availability
- Reliable measurement thanks to improved focusing and small beam angle, particularly in silos with many internal fittings
- Large measuring ranges up to 125 m (410 ft)
- Safety by design - ensures highest safety
- Easy, guided commissioning with intuitive user interface in local language
- Reliable measurement even in variable product and process conditions
- Maximum reliability thanks to multi-echo tracking
- HistoROM configuration memory makes for easier commissioning, maintenance and diagnostics
- Antenna design not sensitive to buildup
- Purge air connection for cleaning in extreme conditions
- Alignment device for easy adaptation of sensor
- SIL2 as per IEC 61508, SIL3 for homogeneous or diverse redundancy, 3rd party approved
- Easy proof testing for SIL
- Seamless integration in process control and asset management systems
- RFID TAG - easy identification of measuring points for improved data access
- Heartbeat Technology

Endress+Hauser

People for Process Automation

Table of contents

Important document information . . . 4
Safety symbols . . . 4
Electrical symbols . . . 4
Symbols for certain types of information . . . 4
Symbols in graphics . . . 4
Symbols at the device . . . 5

Terms and abbreviations . . . 6

Registered trademarks . . . 7

Function and system design . . . 8
Measuring principle . . . 8

Input . . . 9
Measured variable . . . 9
Measuring range . . . 9
Operating frequency . . . 9
Transmission power . . . 9

Output . . . 10
Output signal . . . 10
Signal on alarm . . . 10
Linearization . . . 10
Galvanic isolation . . . 11
Protocol-specific data . . . 11

Power supply . . . 12
Terminal assignment . . . 12
Device plug connectors . . . 18
Supply voltage . . . 19
Power consumption . . . 20
Current consumption . . . 20
Power supply failure . . . 20
Potential equalization . . . 20
Cable entries . . . 21
Cable specification . . . 21
Overvoltage protection . . . 21

Performance characteristics . . . 23
Reference operating conditions . . . 23
Reference accuracy . . . 23
Measured value resolution . . . 23
Response time . . . 24
Influence of ambient temperature . . . 24

Installation . . . 25
Installation conditions . . . 25
Installation: Drip-off antenna PTFE 50 mm / 2" . . . 29
Installation: flush mount antenna . . . 30
Purge air connection for FMR67 . . . 32
Container with heat insulation . . . 33

Environment . . . 34
Ambient temperature range . . . 34
Ambient temperature limits . . . 34
Storage temperature . . . 35
Climate class . . . 35
Altitude according to IEC61010-1 Ed.3 . . . 36
Degree of protection . . . 36
Vibration resistance . . . 36
Electromagnetic compatibility (EMC) . . . 36

Process . . . 37
Process temperature, process pressure . . . 37
Dielectric constant . . . 39

Mechanical construction . . . 40
Dimensions . . . 40
Weight . . . 47
Materials: GT18 housing (stainless steel, corrosion-resistant) . . . 48
Materials: GT19 housing (plastic) . . . 49
Materials: GT20 housing (die-cast aluminum, powder-coated, seawater-resistant) . . . 50
Materials: antenna and process connection . . . 51
Materials: Weather protection cover . . . 53

Operability . . . 54
Operating concept . . . 54
Local operation . . . 54
Operation with remote display and operating module FHX50 . . . 55
Remote operation . . . 55
System integration via Fieldgate . . . 57

Certificates and approvals . . . 58
CE mark . . . 58
RoHS . . . 58
RCM-Tick marking . . . 58
Ex approval . . . 58
Dual seal according to ANSI/ISA 12.27.01 . . . 58
Functional safety . . . 58
WHG . . . 58
Pressure equipment with allowable pressure ≤ 200 bar (2 900 psi) . . . 58
Marine approval . . . 59
Radio standard EN 302729-1/2 . . . 59
Radio standard EN 302372-1/2 . . . 60
FCC . . . 60
Industry Canada . . . 60
CRN approval . . . 61
Test, certificate . . . 62
Hard-copy product documentation . . . 62
Other standards and guidelines . . . 63

Ordering information . . . 64
Ordering information . . . 64
3-point linearity protocol . . . 65
5-point linearity protocol . . . 66
Customer-specific configuration . . . 67
Services . . . 67

Application Packages 68
Heartbeat Diagnostics 68
Heartbeat Verification 69
Heartbeat Monitoring 70

Accessories 71
Device-specific accessories 71
Communication-specific accessories 77
Service-specific accessories 78
System components 78

Supplementary documentation 79
Standard documentation 79
Safety Instructions (XA) 79

Important document information

Safety symbols

Symbol	Meaning
DANGER	**DANGER!** This symbol alerts you to a dangerous situation. Failure to avoid this situation will result in serious or fatal injury.
WARNING	**WARNING!** This symbol alerts you to a dangerous situation. Failure to avoid this situation can result in serious or fatal injury.
CAUTION	**CAUTION!** This symbol alerts you to a dangerous situation. Failure to avoid this situation can result in minor or medium injury.
NOTICE	**NOTE!** This symbol contains information on procedures and other facts which do not result in personal injury.

Electrical symbols

Symbol	Meaning	Symbol	Meaning
⎓	Direct current	∼	Alternating current
≂	Direct current and alternating current	⏚	**Ground connection** A grounded terminal which, as far as the operator is concerned, is grounded via a grounding system.
⏚	**Protective ground connection** A terminal which must be connected to ground prior to establishing any other connections.	⏚	**Equipotential connection** A connection that has to be connected to the plant grounding system: This may be a potential equalization line or a star grounding system depending on national or company codes of practice.

Symbols for certain types of information

Symbol	Meaning
✓	**Permitted** Procedures, processes or actions that are permitted.
✓✓	**Preferred** Procedures, processes or actions that are preferred.
✗	**Forbidden** Procedures, processes or actions that are forbidden.
ℹ	**Tip** Indicates additional information.
	Reference to documentation
	Reference to page
	Reference to graphic
	Visual inspection

Symbols in graphics

Symbol	Meaning
1, 2, 3 ...	Item numbers
1., 2., 3....	Series of steps
A, B, C, ...	Views
A-A, B-B, C-C, ...	Sections

Symbol	Meaning
EX	**Hazardous area** Indicates a hazardous area.
EX	**Safe area (non-hazardous area)** Indicates the non-hazardous area.

Symbols at the device

Symbol	Meaning
⚠ → 📖	**Safety instructions** Observe the safety instructions contained in the associated Operating Instructions.
	Temperature resistance of the connection cables Specifies the minimum value of the temperature resistance of the connection cables.

Terms and abbreviations

Term/abbreviation	Explanation
BA	Document type "Operating Instructions"
KA	Document type "Brief Operating Instructions"
TI	Document type "Technical Information"
SD	Document type "Special Documentation"
XA	Document type "Safety Instructions"
PN	Nominal pressure
MWP	Maximum Working Pressure The MWP can also be found on the nameplate.
ToF	Time of Flight
FieldCare	Scalable software tool for device configuration and integrated plant asset management solutions
DeviceCare	Universal configuration software for Endress+Hauser HART, PROFIBUS, FOUNDATION Fieldbus and Ethernet field devices
DTM	Device Type Manager
DD	Device Description for HART communication protocol
DC	Relative dielectric constant ε_r
Operating tool	The term "operating tool" is used in place of the following operating software: FieldCare / DeviceCare, for operation via HART communication and PC
BD	Blocking Distance; no signals are analyzed within the BD.

Registered trademarks

HART®
Registered trademark of the HART Communication Foundation, Austin, USA

KALREZ®, VITON®
Registered trademark of DuPont Performance Elastomers L.L.C., Wilmington, USA

TEFLON®
Registered trademark of E.I. DuPont de Nemours & Co., Wilmington, USA

Function and system design

Measuring principle

The Micropilot is a "downward-looking" measuring system, operating based on the frequency modulated continuous wave method (FMCW). The antenna emits an electromagnetic wave at a continuously varying frequency. This wave is reflected by the product and received again by the antenna.

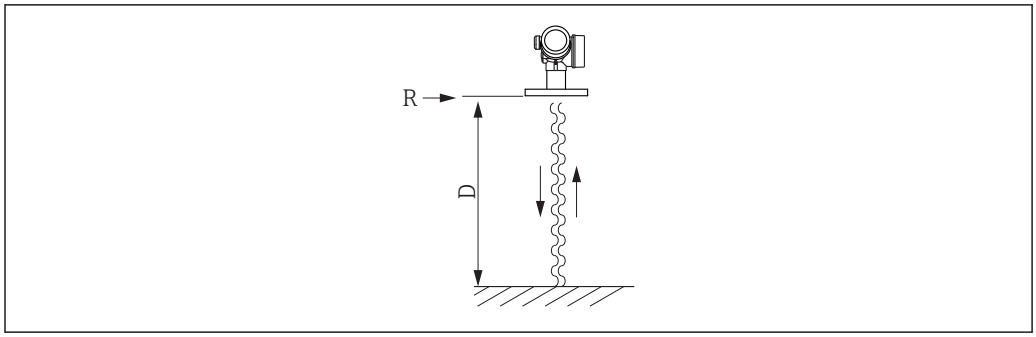

1 FMCW principle: transmission and reflection of the continuous wave

R Reference point of measurement
D Distance between reference point and product surface

The frequency of this wave is modulated in the form of a sawtooth signal between two limit frequencies f_1 and f_2:

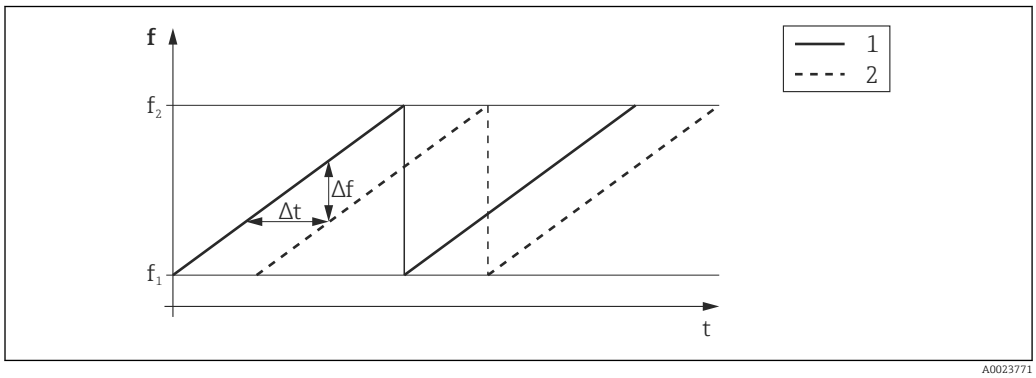

2 FMCW principle: result of frequency modulation

1 Transmitted signal
2 Received signal

This results in the following difference frequency at any time between the transmitted signal and the received signal:

$\Delta f = k\,\Delta t$

where Δt is the run time and k is the specified increase in frequency modulation.

Δt is given by the distance D between the reference point R and the product surface:

$D = (c\,\Delta t)\ /\ 2$

where c is the speed of propagation of the wave.

In summary, D can be calculated from the measured difference frequency Δf. D is then used to determine the content of the tank or silo.

Input

Measured variable

The measured variable is the distance between the reference point and the product surface. The level is calculated based on "E", the empty distance entered. Optionally, the level can be converted to other variables (volume, mass) by linearization (32 value pairs).

Measuring range

Maximum measuring range

Device	Antenna [1]	Maximum measuring range
FMR67	GA: Drip-off, PTFE 50 mm / 2"	50 m (164 ft)
	GP: PTFE flush mount 80 mm / 3"	125 m (410 ft)

1) Feature 070 in the product structure

Usable measuring range

The usable measuring range depends on the antenna size, the medium's reflective properties, the installation position and any possible interference reflections.

Tables in preparation

For dielectric constants (DC values) of many media commonly used in various industries refer to:
- the Endress+Hauser DC manual (CP01076F)
- the Endress+Hauser "DC Values App" (available for Android and iOS)

Operating frequency

Approx. 80 GHz

Several FMR6x devices can be installed in one tank thanks to the short measuring duration and the high beam focus.

Transmission power

- Peak power: 6.3 mW
- Average output power: 63 µW

Output

Output signal

HART

Signal coding	FSK 0.5 mA over current signal
Data transmission rate	1 200 Bit/s
Galvanic isolation	Yes

Switch output

For HART devices, the switch output is available as an option. See product structure, feature 20: "Power Supply, Output", option B: "2-wire; 4-20mA HART, switch output"

Devices with PROFIBUS PA and FOUNDATION Fieldbus always have a switch output.

Switch output	
Function	Open collector switching output
Switching behavior	Binary (conductive or non-conductive), switches when the programmable switch point is reached
Failure mode	non-conductive
Electrical connection values	U = 16 to 35 V_{DC}, I = 0 to 40 mA
Internal resistance	R_I < 880 Ω The voltage drop at this internal resistance has to be taken into account on planning the configuration. For example, the resulting voltage at a connected relay must be sufficient to switch the relay.
Insulation voltage	floating, Insulation voltage 1 350 V_{DC} to power supply aund 500 V_{AC} to ground
Switch point	freely programmable, separately for switch-on and switch-off point
Switching delay	freely programmable from 0 to 100 s, separately for switch-on and switch-off point
Number of switching cycles	corresponds to the measuring cycle
Signal source device variables	▪ Level linearized ▪ Distance ▪ Terminal voltage ▪ Electronic temperature ▪ Relative echo amplitude ▪ Diagnostic values, Advanced diagnostics
Number of switching cycles	unlimited

Signal on alarm

Depending on the interface, failure information is displayed as follows:
- Current output (for HART devices)
  - Failsafe mode selectable (in accordance with NAMUR Recommendation NE 43):
    Minimum alarm: 3.6 mA
    Maximum alarm (= factory setting): 22 mA
  - Failsafe mode with user-selectable value: 3.59 to 22.5 mA
- Local display
  - Status signal (in accordance with NAMUR Recommendation NE 107)
  - Plain text display
- Operating tool via digital communication (HART, PROFIBUS PA, FOUNDATION Fieldbus) or service interface (CDI)
  - Status signal (in accordance with NAMUR Recommendation NE 107)
  - Plain text display

Linearization

The linearization function of the device allows the conversion of the measured value into any unit of length or volume. Linearization tables for calculating the volume in cylindrical tanks are pre-programmed. Other linearization tables of up to 32 value pairs can be entered manually or semi-automatically.

Galvanic isolation

All circuits for the outputs are galvanically isolated from each other.

Protocol-specific data

HART

Manufacturer ID	17 (0x11)
Device type ID	0x112B
HART specification	7.0
Device description files (DTM, DD)	Information and files under: ▪ www.endress.com ▪ www.fieldcommgroup.org
HART load	min. 250 Ω
HART device variables	The measured values can be freely assigned to the device variables. **Measured values for PV (primary variable)** ▪ Level linearized ▪ Distance ▪ Electronic temperature ▪ Relative echo amplitude ▪ Area of incoupling ▪ Analog output adv. diagnostics 1 ▪ Analog output adv. diagnostics 2 **Measured values for SV, TV, FV (second, third and fourth variable)** ▪ Level linearized ▪ Distance ▪ Electronic temperature ▪ Terminal voltage ▪ Relative echo amplitude ▪ Absolute echo amplitude ▪ Area of incoupling ▪ Analog output adv. diagnostics 1 ▪ Analog output adv. diagnostics 2
Supported functions	▪ Burst mode ▪ Additional transmitter status

Wireless HART data

Minimum start-up voltage	16 V
Start-up current	3.6 mA
Start-up time	65 s
Minimum operating voltage	14.0 V
Multidrop current	4.0 mA
Set-up time	15 s

Power supply

Terminal assignment **2-wire: 4-20mA HART**

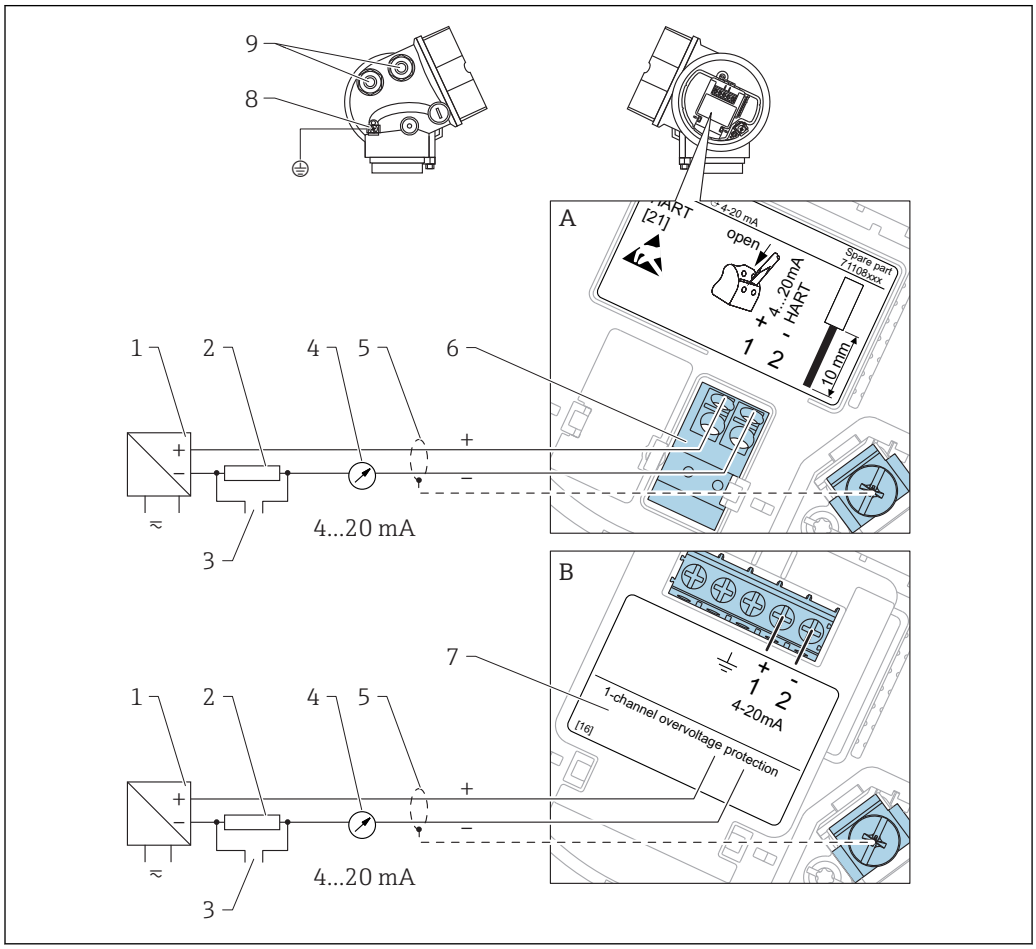

3 Terminal assignment 2-wire; 4-20mA HART

A Without integrated overvoltage protection
B With integrated overvoltage protection
1 Active barrier with power supply (e.g. RN221N): Observe terminal voltage
2 HART communication resistor (≥ 250 Ω): Observe maximum load
3 Connection for Commubox FXA195 or FieldXpert SFX350/SFX370 (via VIATOR Bluetooth modem)
4 Analog display device: Observe maximum load
5 Cable screen; observe cable specification
6 4-20mA HART (passive): Terminals 1 and 2
7 Overvoltage protection module
8 Terminal for potential equalization line
9 Cable entry

2-wire: 4-20mA HART, switch output

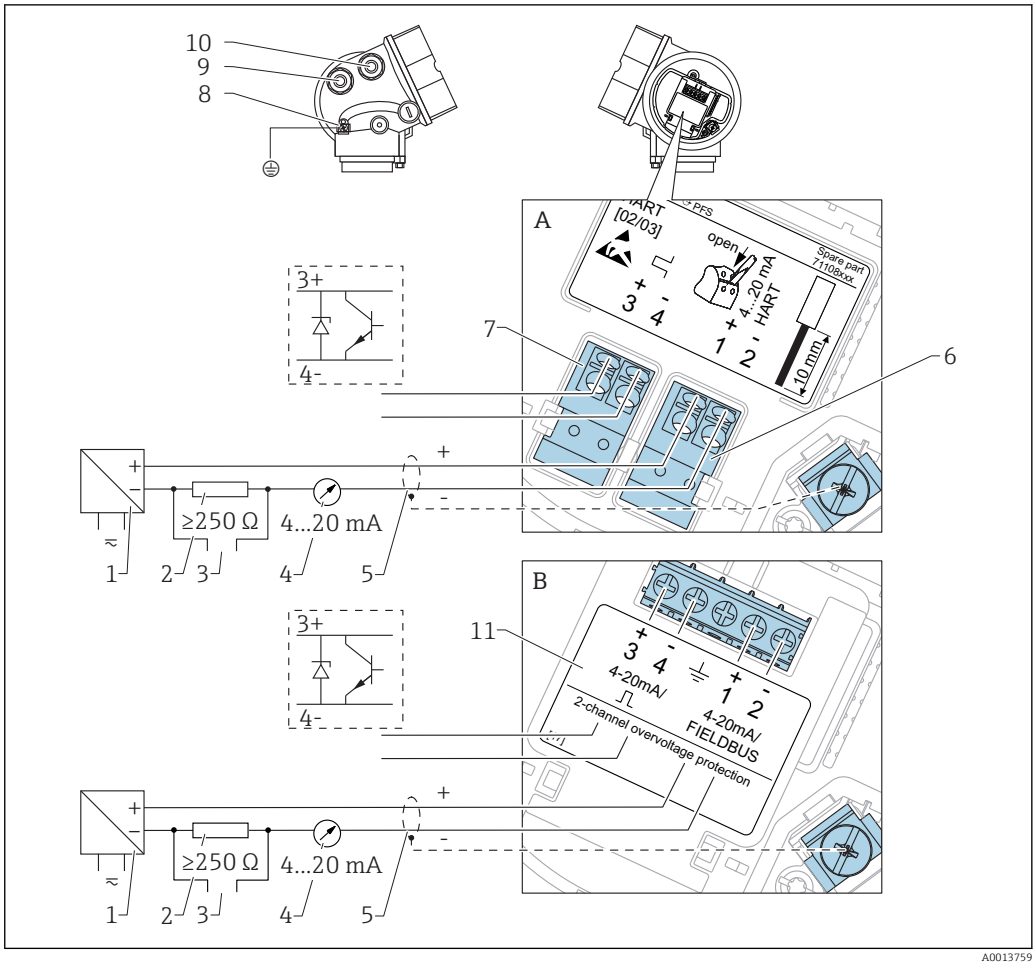

4 *Terminal assignment 2-wire; 4-20mA HART, switch output*

A Without integrated overvoltage protection
B With integrated overvoltage protection
1 Active barrier with power supply (e.g. RN221N): Observe terminal voltage
2 HART communication resistor (≥ 250 Ω): Observe maximum load
3 Connection for Commubox FXA195 or FieldXpert SFX350/SFX370 (via VIATOR Bluetooth modem)
4 Analog display device: Observe maximum load
5 Cable screen; observe cable specification
6 4-20mA HART (passive): Terminals 1 and 2
7 Switch output (open collector): Terminals 3 and 4
8 Terminal for potential equalization line
9 Cable entry for 4-20mA HART line
10 Cable entry for switch output line
11 Overvoltage protection module

2-wire: 4-20mA HART, 4-20mA

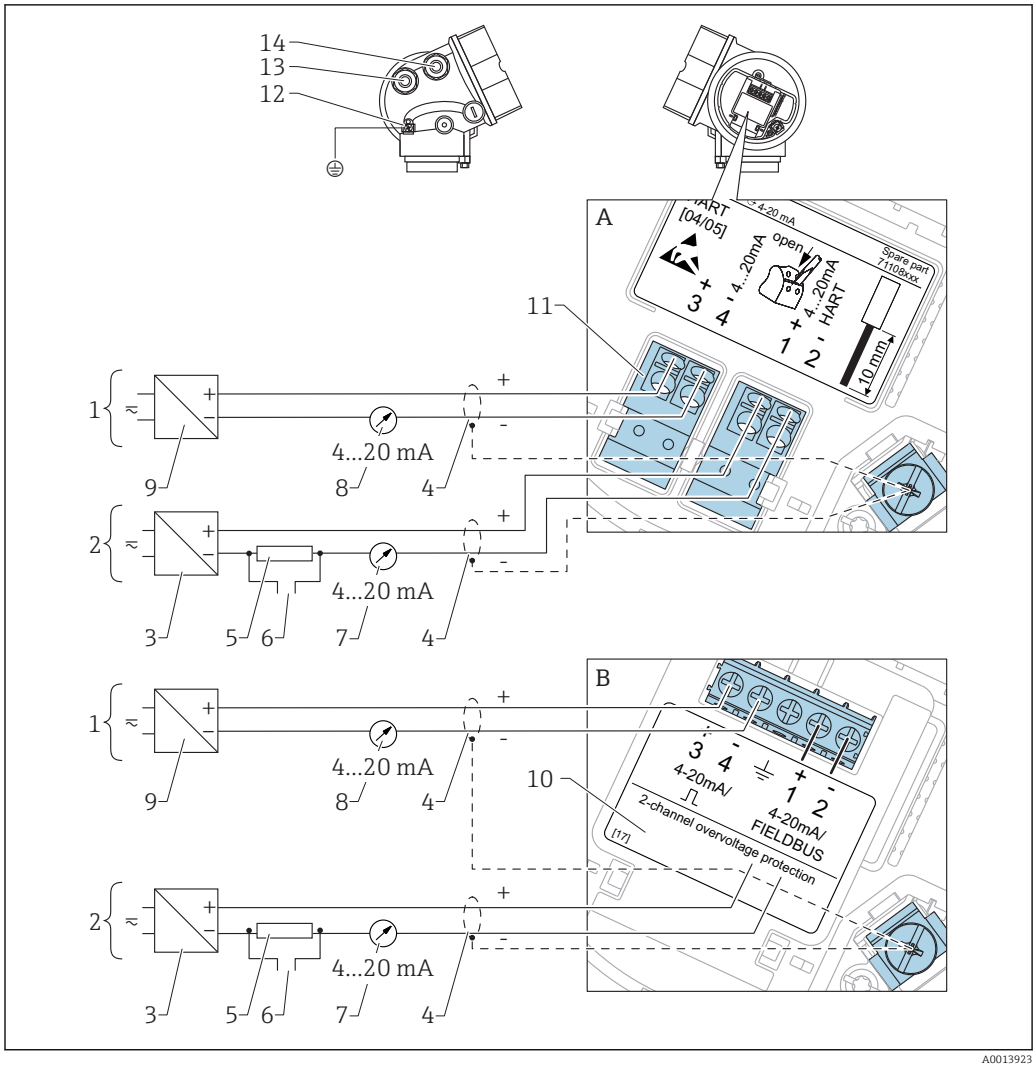

5 Terminal assignment 2-wire, 4-20 mA HART, 4...20mA

A Without integrated overvoltage protection
B With integrated overvoltage protection
1 Connection current output 2
2 Connection current output 1
3 Supply voltage for current output 1 (e.g. RN221N); Observe terminal voltage
4 Cable screen; observe cable specification
5 HART communication resistor (≥ 250 Ω): Observe maximum load
6 Connection for Commubox FXA195 or FieldXpert SFX350/SFX370 (via VIATOR Bluetooth modem)
7 Analog display device ; observe maximum load
8 Analog display device ; observe maximum load
9 Supply voltage for current output 2 (e.g. RN221N); Obeserve terminal voltage
10 Overvoltage protection module
11 Current output 2: Terminals 3 and 4
12 Terminal for the potential equalization line
13 Cable entry for current output 1
14 Cable entry for current output 2

This version is also suited for single-channel operation. In this case, current output 1 (terminals 1 and 2) must be used.

4-wire: 4-20mA HART (10.4 to 48 V_{DC})

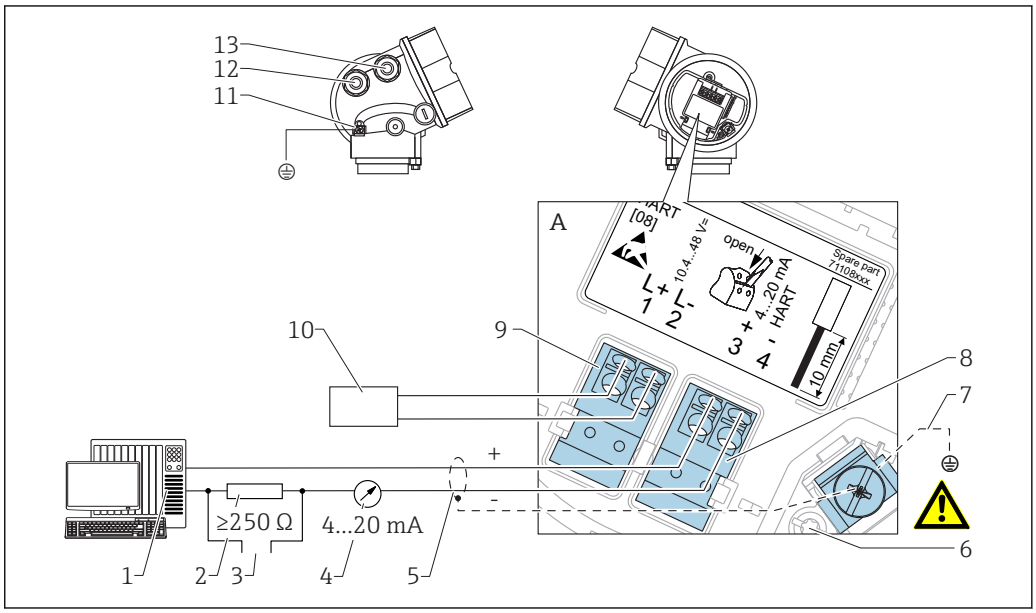

6 *Terminal assignment 4-wire; 4-20mA HART (10.4 to 48 V_{DC})*

1 *Evaluation unit, e.g. PLC*
2 *HART communication resistor (≥ 250 Ω): Observe maximum load*
3 *Connection for Commubox FXA195 or FieldXpert SFX350/SFX370 (via VIATOR Bluetooth modem)*
4 *Analog display device: Observe maximum load*
5 *Signal cable including screening (if required), observe cable specification*
6 *Protective connection; do not disconnect!*
7 *Protective earth, observe cable specification*
8 *4...20mA HART (active): Terminals 3 and 4*
9 *Supply voltage: Terminals 1 and 2*
10 *Supply voltage: Observe terminal voltage, observe cable specification*
11 *Terminal for potential equalization*
12 *Cable entry for signal line*
13 *Cable entry for power supply*

4-wire: 4-20mA HART (90 to 253 V_{AC})

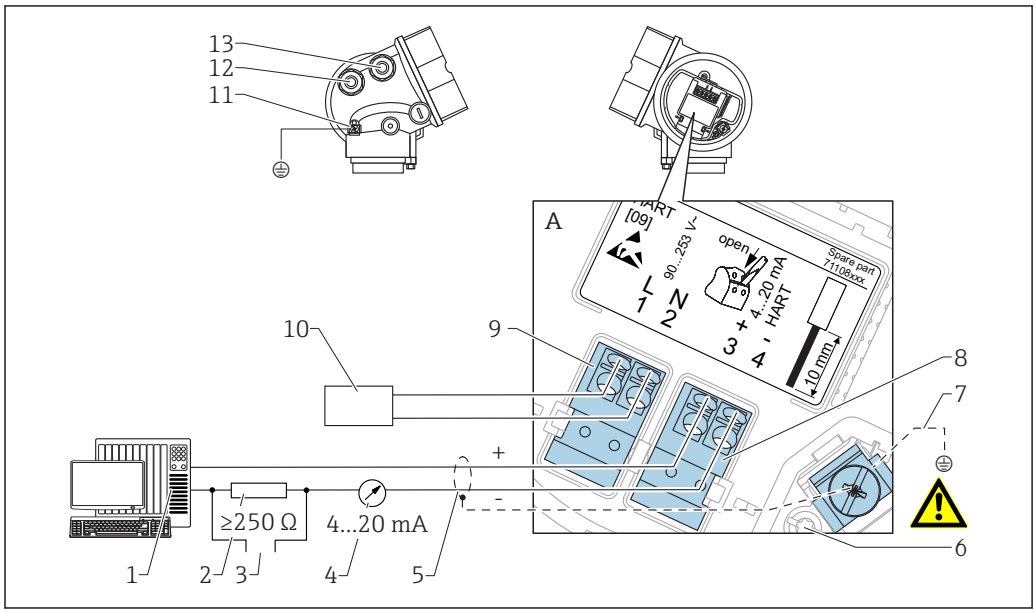

7 *Terminal assignment 4-wire; 4-20mA HART (90 to 253 V_{AC})*

1 *Evaluation unit, e.g. PLC*
2 *HART communication resistor (≥ 250 Ω): Observe maximum load*
3 *Connection for Commubox FXA195 or FieldXpert SFX350/SFX370 (via VIATOR Bluetooth modem)*
4 *Analog display device: Observe maximum load*
5 *Signal cable including screening (if required), observe cable specification*
6 *Protective connection; do not disconnect!*
7 *Protective earth, observe cable specification*
8 *4...20mA HART (active): Terminals 3 and 4*
9 *Supply voltage: Terminals 1 and 2*
10 *Supply voltage: Observe terminal voltage, observe cable specification*
11 *Terminal for potential equalization*
12 *Cable entry for signal line*
13 *Cable entry for power supply*

CAUTION

To ensure electrical safety:

- Do not disconnect the protective connection (6).
- Disconnect the supply voltage before disconnecting the protective earth (7).

Connect protective earth to the internal ground terminal (7) before connecting the supply voltage. If necessary, connect the potential matching line to the external ground terminal (11).

In order to ensure electromagnetic compatibility (EMC): Do not only ground the device via the protective earth conductor of the supply cable. Instead, the functional grounding must also be connected to the process connection (flange or threaded connection) or to the external ground terminal.

An easily accessible power switch must be installed in the proximity of the device. The power switch must be marked as a disconnector for the device (IEC/EN61010).

Connection examples for the switch output

For HART devices, the switch output is available as an option. See product structure, feature 20: "Power Supply, Output", option B: "2-wire; 4-20mA HART, switch output"

Devices with PROFIBUS PA and FOUNDATION Fieldbus always have a switch output.

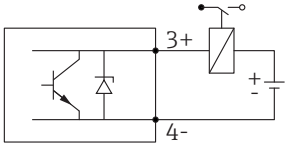

8 Connection of a relay

Suitable relays (examples):
- Solid-state relay: Phoenix Contact OV-24DC/480AC/5 with mounting rail connector UMK-1 OM-R/AMS
- Electromechanical relay: Phoenix Contact PLC-RSC-12DC/21

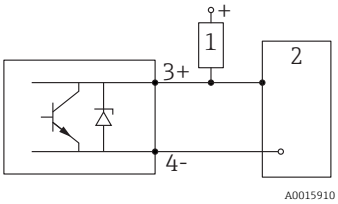

9 Connection of a digital input

1 Pull-up resistor
2 Digital input

For optimum interference immunity we recommend to connect an external resistor (internal resistance of the relay or Pull-up resistor) of < 1 000 Ω.

Device plug connectors

For the versions with fieldbus plug connector (M12 or 7/8"), the signal line can be connected without opening the housing.

Pin assignment of the M12 plug connector

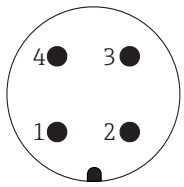

Pin	Meaning
1	Signal +
2	not connected
3	Signal -
4	Ground

Pin assignment of the 7/8" plug connector

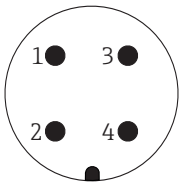

Pin	Meaning
1	Signal -
2	Signal +
3	Not connected
4	Screen

Supply voltage

An external power supply is necessary.

Various power supply units can be ordered as an accessory from Endress+Hauser.

2-wire, 4-20mA HART, passive

"Power supply, output" [1]	"Approval" [2]	Terminal voltage U at device	Maximum load R, depending on the supply voltage U_0 of the power supply unit
A: 2-wire; 4-20mA HART	▪ Non-hazardous ▪ Ex nA ▪ Ex ic ▪ CSA GP	14 to 35 V	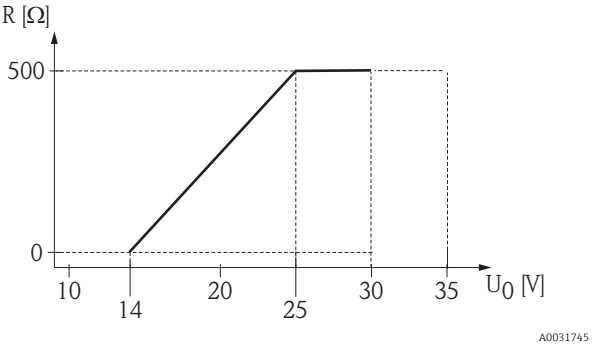
	Ex ia / IS	14 to 30 V	
	▪ Ex d(ia) / XP ▪ Ex ic(ia) ▪ Ex nA(ia) ▪ Ex ta / DIP	14 to 35 V [3]	
	Ex ia + Ex d(ia) / IS + XP	14 to 30 V	

1) Feature 020 in the product structure
2) Feature 010 in the product structure
3) At ambient temperatures $T_a \leq$ -20 °C, a terminal voltage U ≥ 16 V is required to start the device with the min. error current (3.6 mA).

"Power supply, output" [1]	"Approval" [2]	Terminal voltage U at device	Maximum load R, depending on the supply voltage U_0 of the power supply unit
B: 2-wire; 4-20 mA HART, switch outpu	▪ Non-hazardous ▪ Ex nA ▪ Ex nA(ia) ▪ Ex ic ▪ Ex ic(ia) ▪ Ex d(ia) / XP ▪ Ex ta / DIP ▪ CSA GP	16 to 35 V	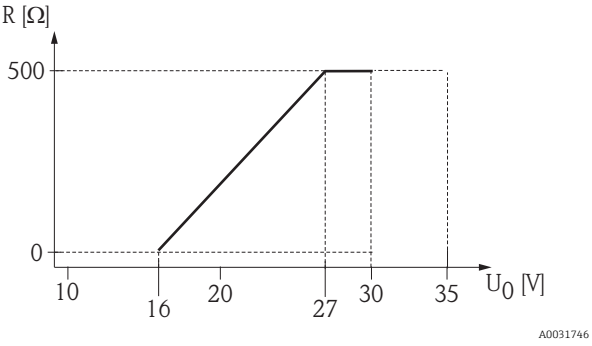
	▪ Ex ia / IS ▪ Ex ia + Ex d(ia) / IS + XP	16 to 30 V	

1) Feature 020 in the product structure
2) Feature 010 in the product structure

"Power supply, output" [1]	"Approval" [2]	Terminal voltage U at device	Maximum load R, depending on the supply voltage U_0 of the power supply unit
C: 2-wire; 4-20mA HART, 4-20mA	All	16 to 30 V	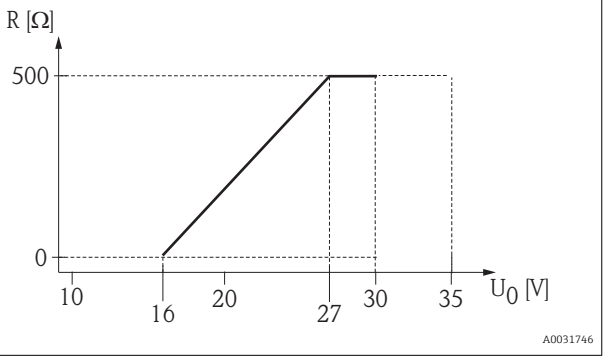

1) Feature 020 in the product structure
2) Feature 010 in the product structure

Integrated polarity reversal protection	Yes
Permitted residual ripple with f = 0 to 100 Hz	U_{SS} < 1 V
Permitted residual ripple with f = 100 to 10000 Hz	U_{SS} < 10 mV

4-wire, 4-20mA HART, active

"Power supply; output" [1]	Terminal voltage U	Maximum load R_{max}
K: 4-wire 90-253VAC; 4-20mA HART	90 to 253 V_{AC} (50 to 60 Hz), overvoltage category II	500 Ω
L: 4-wire 10.4-48VDC; 4-20mA HART	10.4 to 48 V_{DC}	

1) Feature 020 in the product structure

Power consumption

"Power supply; Output" [1]	Power consumption
A: 2-wire; 4-20mA HART	< 0.9 W
B: 2-wire; 4-20mA HART, switch output	< 0.9 W
C: 2-wire; 4-20mA HART, 4-20mA	< 2 x 0.7 W
K: 4-wire 90-253VAC; 4-20mA HART	6 VA
L: 4-wire 10,4-48VDC; 4-20mA HART	1.3 W

1) Feature 020 of the product structure

Current consumption

HART	
Nominal current	3.6 to 22 mA the start-up current for multidrop mode can be parametrized (is set to 3.6 mA on delivery)
Breakdown signal (NAMUR NE43)	adjustable: 3.59 to 22.5 mA

Power supply failure

- Configuration is retained in the HistoROM (EEPROM).
- Error messages (incl. value of operated hours counter) are stored.

Potential equalization

No special measures for potential equalization are required.

If the device is designed for hazardous areas, observe the information in the documentation "Safety Instructions" (XA).

Cable entries

Connection of power supply and signal line

To be selected in feature 050 "Electrical connection"
- Gland M20; Material dependent on the approval:
  - For Non-Ex, ATEX, IECEx, NEPSI Ex ia/ic:
    Plastics M20x1.5 for cable Ø5 to 10 mm (0.2 to 0.39 in)
  - For Dust-Ex, FM IS, CSA IS, CSA GP, Ex nA:
    Metal M20x1.5 for cable Ø7 to 10 mm (0.28 to 0.39 in) [1)]
  - For Ex d:
    No gland available
- Thread
  - ½" NPT
  - G ½"
  - M20 × 1.5
- Plug M12 / Plug 7/8"
  Only available for Non-Ex, Ex ic, Ex ia

Connection of remote display FHX50

Dependent on feature 030: "Display, Operation":
- "Prepared for display FHX50 + M12 connection":
  M12 socket
- "Prepared for display FHX50 + custom connection":
  M16 cable gland

Cable specification

- **Devices without integrated overvoltage protection**
  Pluggable spring-force terminals for wire cross-sections 0.5 to 2.5 mm^2 (20 to 14 AWG)
- **Devices with integrated overvoltage protection**
  Screw terminals for wire cross-sections 0.2 to 2.5 mm^2 (24 to 14 AWG)
- For ambient temperature T_U≥60 °C (140 °F): use cable for temperature T_U +20 K.

HART

- A normal device cable suffices if only the analog signal is used.
- A shielded cable is recommended if using the HART protocol. Observe grounding concept of the plant.
- For 4-wire devices: Standard device cable is sufficient for the power line.

Overvoltage protection

If the measuring device is used for level measurement in flammable liquids which requires the use of overvoltage protection according to DIN EN 60079-14, standard for
test procedures 60060-1 (10 kA, pulse 8/20 µs), overvoltage protection has to be ensured by an integrated or external overvoltage protection module.

Integrated overvoltage protection

An integrated overvoltage protection module is available for 2-wire HART as well as PROFIBUS PA and FOUNDATION Fieldbus devices.

Product structure: Feature 610 "Accessory mounted", option NA "Overvoltage protection".

Technical data	
Resistance per channel	2 × 0.5 Ω max.
Threshold DC voltage	400 to 700 V
Threshold impulse voltage	< 800 V
Capacitance at 1 MHz	< 1.5 pF
Nominal arrest impulse voltage (8/20 µs)	10 kA

1) The material of the gland is dependent on the housing type; GT18 (stainless steel housing): 316L (1.4404); GT19 (plastic housing) and GT20 (aluminum housing): nickel-coated brass (CuZn).

External overvoltage protection

HAW562 or HAW569 from Endress+Hauser are suited as external overvoltage protection.

For detailed information please refer to the following documents:
- HAW562: TI01012K
- HAW569: TI01013K

Performance characteristics

Reference operating conditions

- Temperature = +24 °C (+75 °F) 5 °C (9 °F)
- Pressure = 960 mbar abs. (14 psia) 100 mbar (1.45 psi)
- Humidity = 60 % 15 %
- Reflector: metal plate with diameter ≥ 1 m (40 in)
- No major interference reflections inside the signal beam

Reference accuracy

Typical data under reference operating conditions: DIN EN IEC 61298-2 / DIN EN IEC 60770-1; percentage values in relation to the span.

Output:	digital	analog [1]
Accuracy (Sum of non-linearity, nonrepeatability and hysteresis) [2]	Measuring distance up to 1.5 m (4.92 ft): max. 20 mm (0.79 in)	0.02 %
	Measuring distance > 1.5 m (4.92 ft): 3 mm (0.12 in)	0.02 %
Non-repeatability [3]	≤ 1 mm (0.04 in)	

1) Add error of the analogous value to the digital value.
2) If the reference conditions are not met, the offset/zero point arising from the mounting conditions may be up to ±4 mm (0.16 in). This additional offset/zero point can be compensated for by entering a correction (parameter "level correction") during commissioning.
3) The non-repeatability is already considered in the accuracy.

Differing values in near-range applications

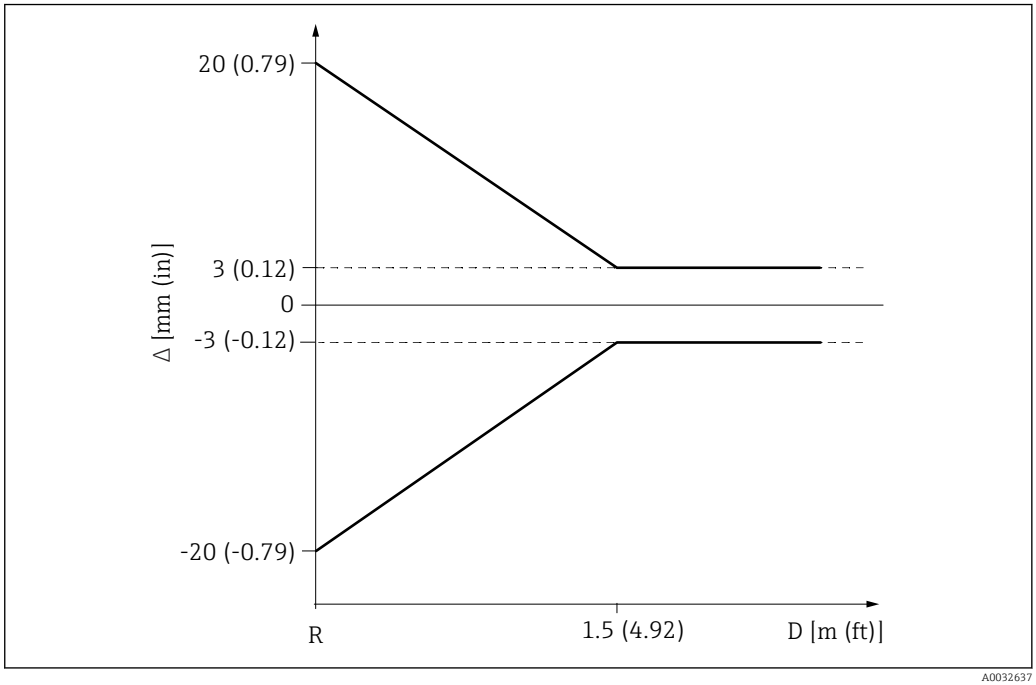

10 Maximum measured error in near-range applications

Δ Maximum measured error
R Reference point of the distance measurement
D Distance from reference point of antenna

Measured value resolution

Dead band according to DIN EN IEC 61298-2 / DIN EN IEC 60770-1:

- Digital: 1 mm
- Analog: 1 µA

Response time

The response time can be configured. The following step response times (in accordance with DIN EN IEC 61298-2 / DIN EN IEC 60770-1) [2] are when damping is switched off:

Sampling rate	≥1.3 s^{-1} at U ≥ 24 V
Response time	< 3.6 s

Influence of ambient temperature

The measurements are performed according to DIN EN IEC 61298-3 / DIN EN IEC 60770-1

- Digital (HART, PROFIBUS PA, FOUNDATION Fieldbus): average T_K = 3 mm/10 K
- Analog (current output):
  - Zero point (4 mA): average T_K = 0.02 %/10 K
  - Span (20 mA): average T_K = 0.05 %/10 K

2) According to DIN EN IEC 61298-2 / DIN EN IEC 60770-1, the step response time is the time that elapses after an abrupt change in the input signal until the change in the output signal has adopted 90% of the steady-state value for the first time.

Installation

Installation conditions

Mounting position

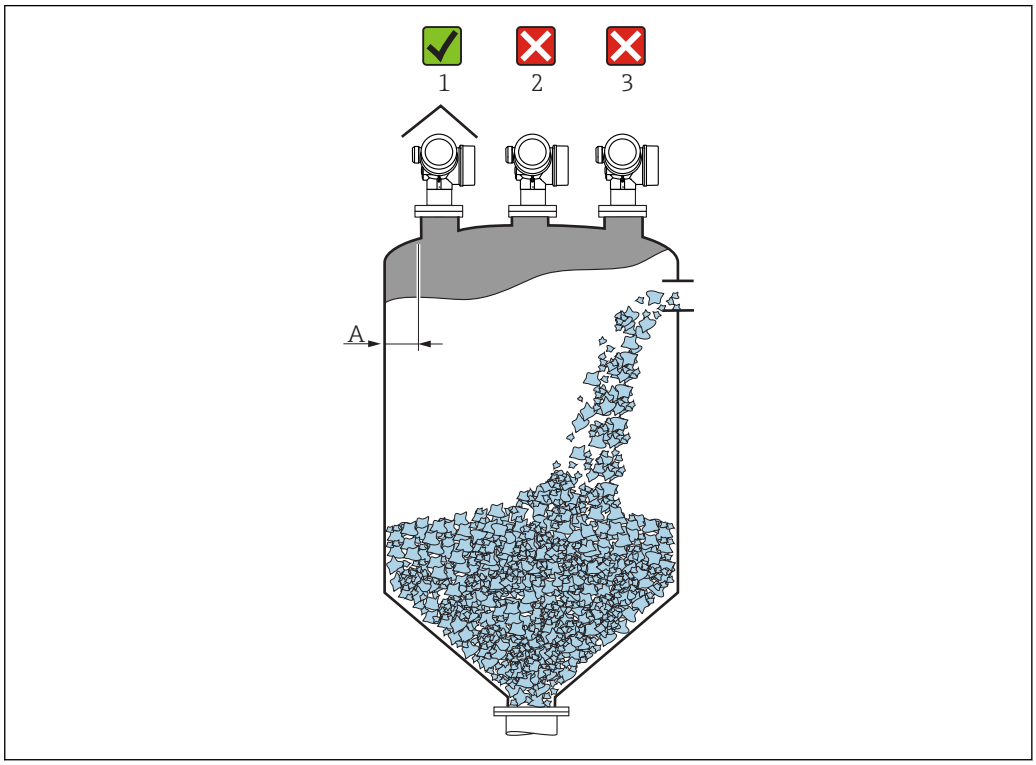

A0016883

- Recommended distance **A** wall - nozzle outer edge: ~ 1/6 of the container diameter. However, the device must not under any circumstances be mounted closer than 20 cm (7.87 in) to the container wall.
  If the container wall is not smooth (corrugated iron, welding seams, joints, etc.) it is recommended to maintain the largest possible distance from the wall. Where necessary use an alignment unit to avoid interference reflections from the container wall.→ 29
- Not in the center (2) as interference can cause signal loss.
- Not above the filling curtain (3).
- The use of a weather protection cover (1) is recommended to protect the transmitter from direct sunlight or rain.
- In applications with strong dust emissions, the integrated purge air connection can prevent the antenna from becoming clogged .

Internal container fittings

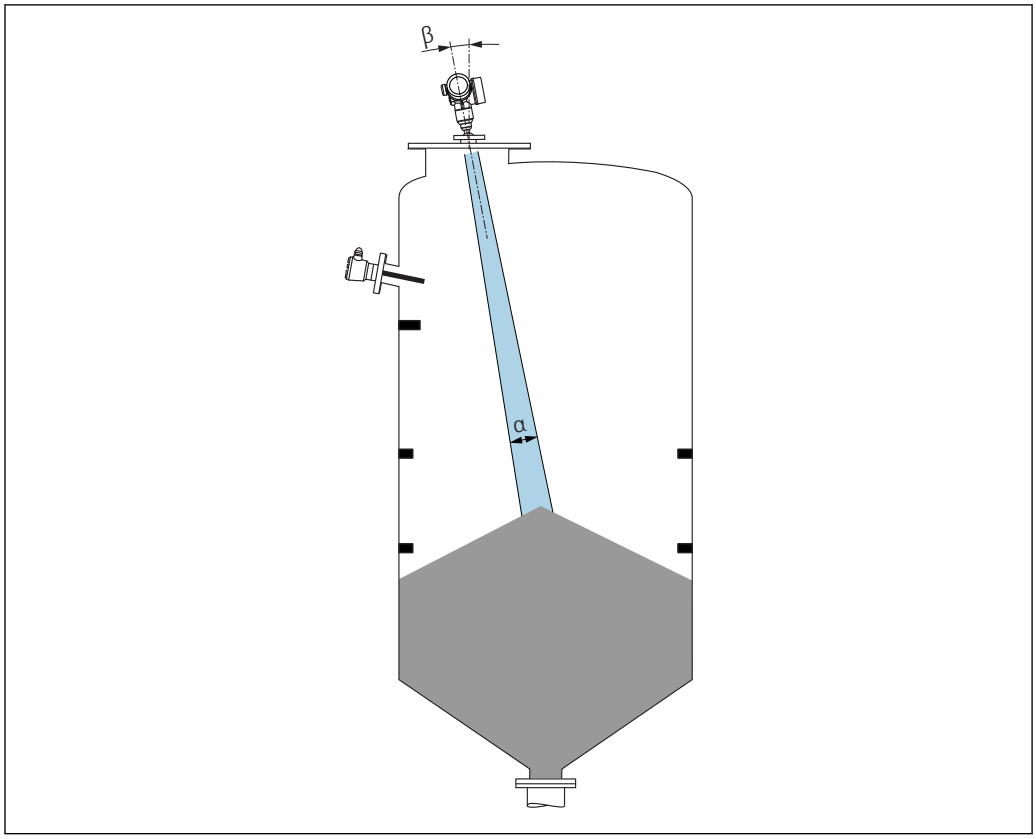

A0031814

Avoid the location of internal fittings (limit switches, temperature sensors, struts etc.) inside the signal beam. Pay attention to the beam angle .

Avoiding interference echoes

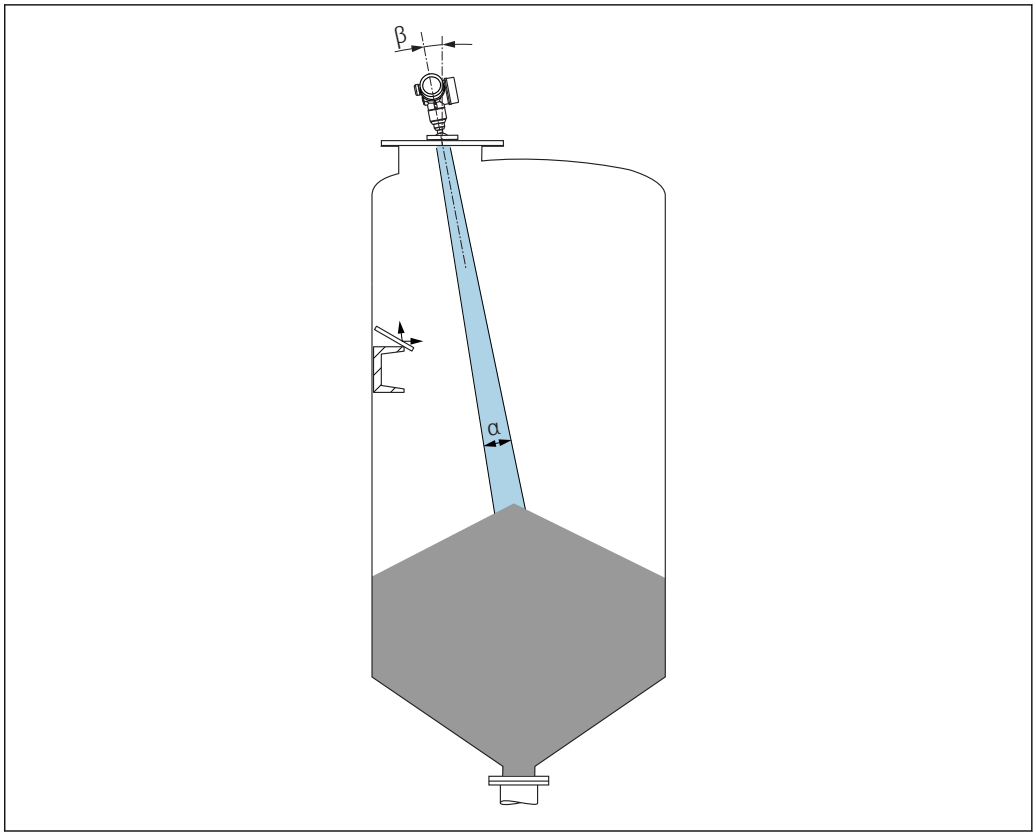

A0031817

Metal deflection plates installed at an angle to scatter the radar signals help prevent interference echoes.

Optimization options

- Antenna size
  The larger the antenna the smaller the beam angle α,resulting in fewer interference echoes .
- Mapping
  Measurement can be optimized by electronically suppressing interference echoes.
- Variable flange seal for FMR67
  Variable flange seals of sizes DN80 to DN150 (3" to 6") are available for the FMR67 with Drip-off antenna [3]. They can be used to align the device to the product surface. Maximum angle of alignment: 8 °.
  How to order:
  – Order with the device [4]
  – Order as an accessory: → 📄 72
- Alignment unit for FMR67
  Flanges sized 4" / DN100 and higher are optionally available with an alignment unit [5] They allow the sensor to be optimally aligned to suit conditions in the container in order to prevent interference reflections. The maximum angle is 15 °.
  The purpose of sensor alignment is primarily to:
  – Prevent interference reflections
  – Increase the maximum possible measuring range in conical outlets

3) Feature 070 in the product structure "Antenna", option GA
4) Feature 100 in the product structure "Process connection", options PL, PM, PN, PO, PQ, PR
5) see feature 100 in the product structure "Process connection".

Beam angle

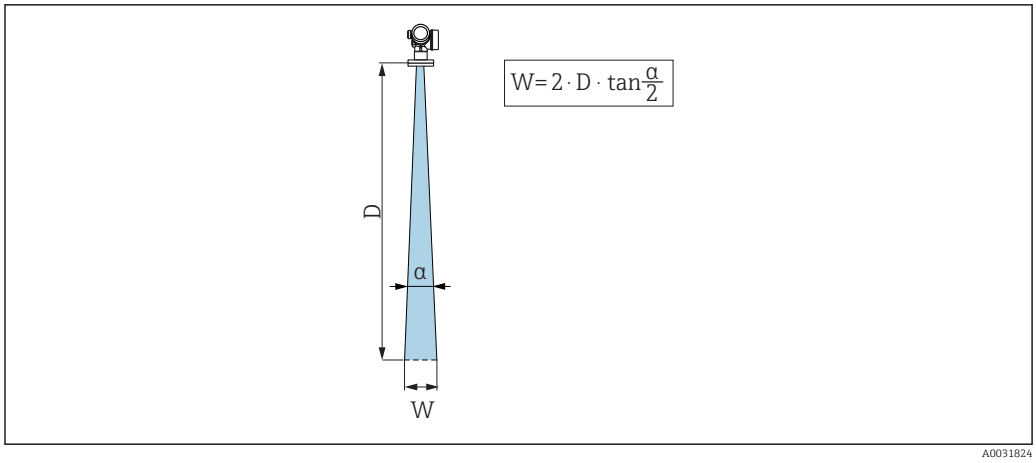

11 Relationship between beam angle α, distance D and beamwidth diameter W

The beam angle is defined as the angle α where the energy density of the radar waves reaches half the value of the maximum energy density (3dB width). Microwaves are also emitted outside the signal beam and can be reflected off interfering installations.

FMR67		
	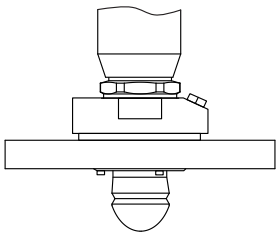 A0032083	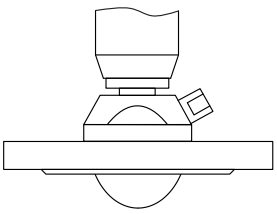 A0032084
Antenna [1]	Drip-off, PTFE 50 mm / 2"	PTFE flush mount 80 mm / 3"
Beam angle α	6 °	4 °
Distance (D)	**Beamwidth diameter W**	
5 m (16 ft)	0.52 m (1.70 ft)	0.35 m (1.15 ft)
10 m (33 ft)	1.05 m (3.44 ft)	0.70 m (2.30 ft)
15 m (49 ft)	1.57 m (5.15 ft)	1.05 m (3.44 ft)
20 m (66 ft)	2.10 m (6.89 ft)	1.40 m (4.59 ft)
25 m (82 ft)	2.62 m (8.60 ft)	1.75 m (5.74 ft)
30 m (98 ft)	3.14 m (10.30 ft)	2.10 m (6.89 ft)
35 m (115 ft)	3.67 m (12.04 ft)	2.44 m (8.00 ft)
40 m (131 ft)	4.19 m (13.75 ft)	2.79 m (9.15 ft)
45 m (148 ft)	4.72 m (15.49 ft)	3.14 m (10.30 ft)
50 m (164 ft)	5.24 m (17.19 ft)	3.49 m (11.45 ft)
60 m (197 ft)	-	4.19 m (13.75 ft)
70 m (230 ft)	-	4.89 m (16.04 ft)
80 m (262 ft)	-	5.59 m (18.34 ft)
90 m (295 ft)	-	6.29 m (20.64 ft)
100 m (328 ft)	-	6.98 m (22.90 ft)
110 m (361 ft)	-	7.68 m (25.20 ft)
120 m (394 ft)	-	8.38 m (27.49 ft)
125 m (410 ft)	-	8.73 m (25.64 ft)

1) Feature 070 in the product structure

Installation: Drip-off antenna PTFE 50 mm / 2"

Aligning the antenna axis

Align the antenna vertically to the product surface.

Optionally, a variable flange seal (available as an accessory) can be used for alignment

Attention:

The maximum reach of the antenna can be reduced if it is not installed perpendicular to the product.

Radial alignment of the antenna

Radial alignment of the antenna is not necessary because the effect of polarization is negligible due to the narrow beam angle.

Information concerning nozzles

The maximum nozzle length H_{max} depends on the nozzle diameter D:

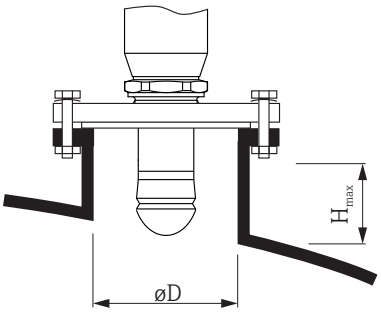

A0032209

Inner nozzle diameter *D*	Maximum nozzle height H_{max}
min. 50 mm (2 in)	≤150 mm (6 in)
80 mm (3 in)	≤200 mm (8 in)
100 mm (4 in)	≤300 mm (12 in)
150 mm (6 in)	≤500 mm (20 in)

Note the following if the antenna does not project out of the nozzle:
- The end of the nozzle must be smooth and free from burrs. The edge of the nozzle should be rounded if possible.
- Mapping must be performed.
- Please contact Endress+Hauser for applications with nozzles that are higher than indicated in the table.

Information concerning threaded connections

- When screwing in, turn by the hex bolt only.
- Tool: open-ended wrench 55 mm
- Maximum permissible torque: 50 Nm (36 lbf ft)

Installation: flush mount antenna

Aligning the antenna axis

UNI flanges with an integrated alignment unit are available for FMR67 devices with a flush mount antenna. An angle of inclination of up to 15° in all directions can be set for the antenna axis using the alignment unit. The alignment unit is used to optimally align the radar beam to the bulk solid.

Process connection with alignment unit [1]	UNI flange	Material	Pressure rating	Suitable for
XCA	UNI 4" / DN100 / 100A	Aluminum	max. 14.5lbs / PN1 / 1K	▪ 4" 150lbs ▪ DN100 PN16 ▪ 10K 100A
XDA	UNI 6" / DN150 / 150A	Aluminum	max. 14.5lbs / PN1 / 1K	▪ 6" 150lbs ▪ DN150 PN16 ▪ 10K 150A
XEA	UNI 8" / DN200 / 200A	Aluminum	max. 14.5lbs / PN1 / 1K	▪ 8" 150lbs ▪ DN200 PN16 ▪ 10K 200A
XFA	UNI 10" / DN250 / 250A	Aluminum	max. 14.5lbs / PN1 / 1K	▪ 10" 150lbs ▪ DN250 PN16 ▪ 10K 250A

1) Feature 100 in the product structure

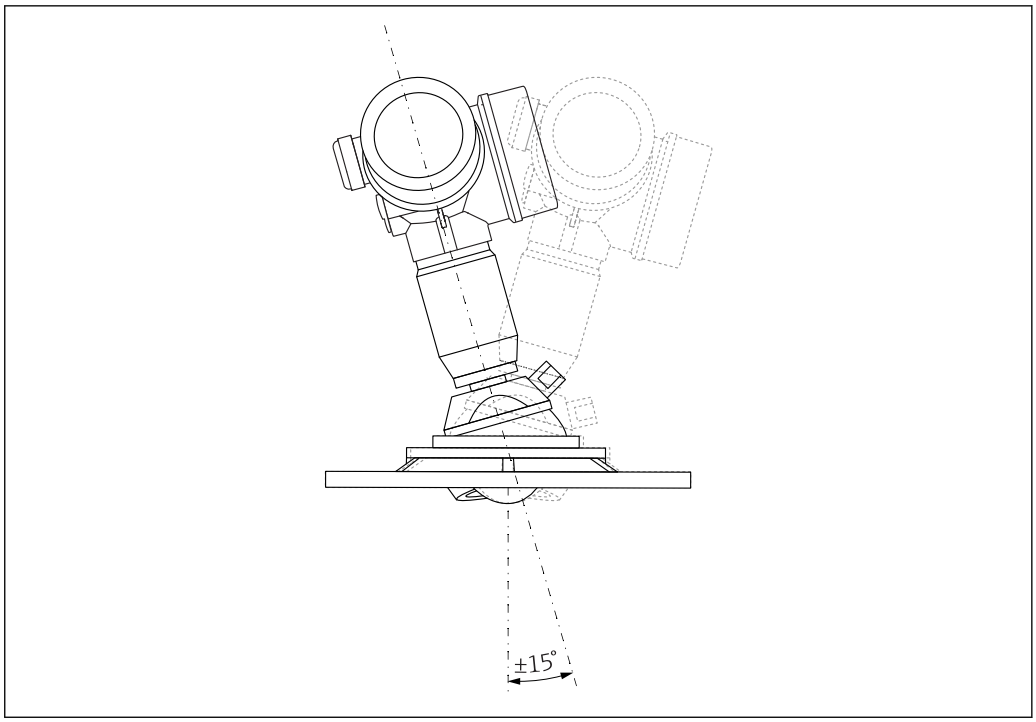

A0032097

12 *Micropilot FMR67 with alignment unit*

Radial alignment of the antenna

Radial alignment of the antenna is not necessary because the effect of polarization is negligible due to the narrow beam angle.

Information concerning nozzles

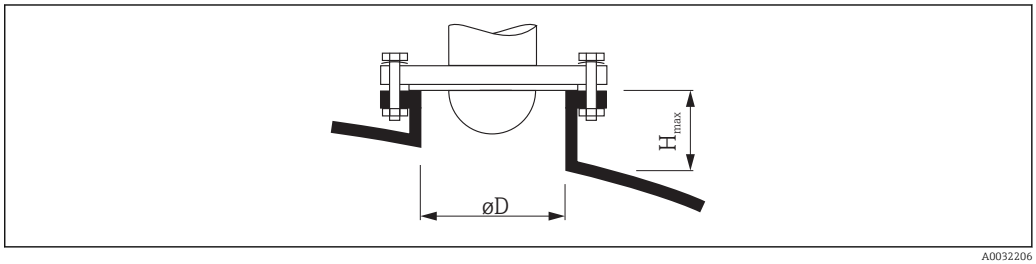

A0032206

Inner nozzle diameter *D*	Maximum nozzle height H_{max}
min. 80 mm (3 in)	≤200 mm (8 in)
100 mm (4 in)	≤300 mm (12 in)
150 mm (6 in)	≤500 mm (20 in)

Note the following if the antenna does not project out of the nozzle:
- The end of the nozzle must be smooth and free from burrs. The edge of the nozzle should be rounded if possible.
- Mapping must be performed.
- Please contact Endress+Hauser for applications with nozzles that are higher than indicated in the table.

Purge air connection for FMR67

Purge air adapter for Drip-off antennas

Purge air connection [1]	Meaning
A	without
3	Purge air adapter G 1/4"
4	Purge air adapter NPT 1/4"

1) Feature 110 in the product structure

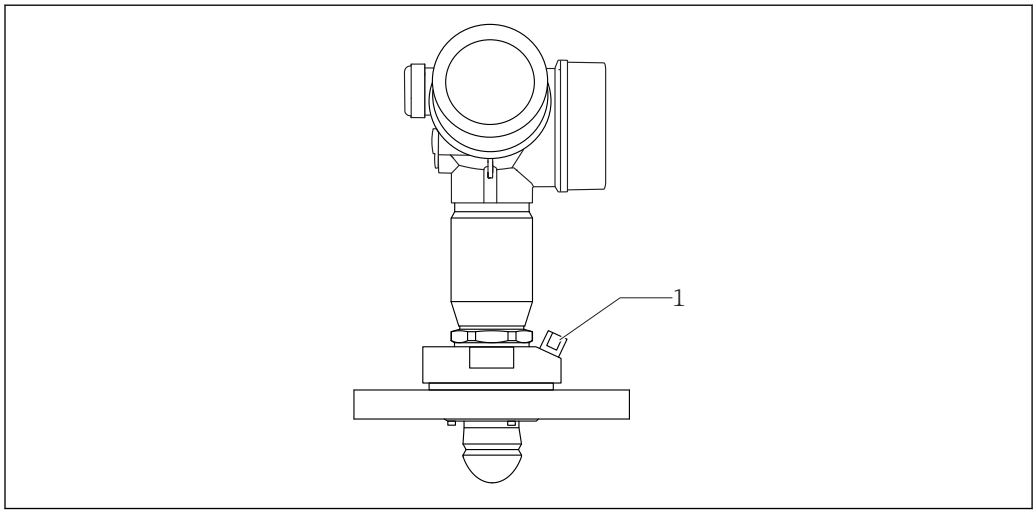

A0032098

1 Purge air connection NPT 1/4" or G 1/4"

Integrated purge air connection for flush-mounted antennas

Purge air connection [1]	Meaning
1	Purge air connection G 1/4"
2	Purge air connection NPT 1/4"

1) Feature 110 in the product structure

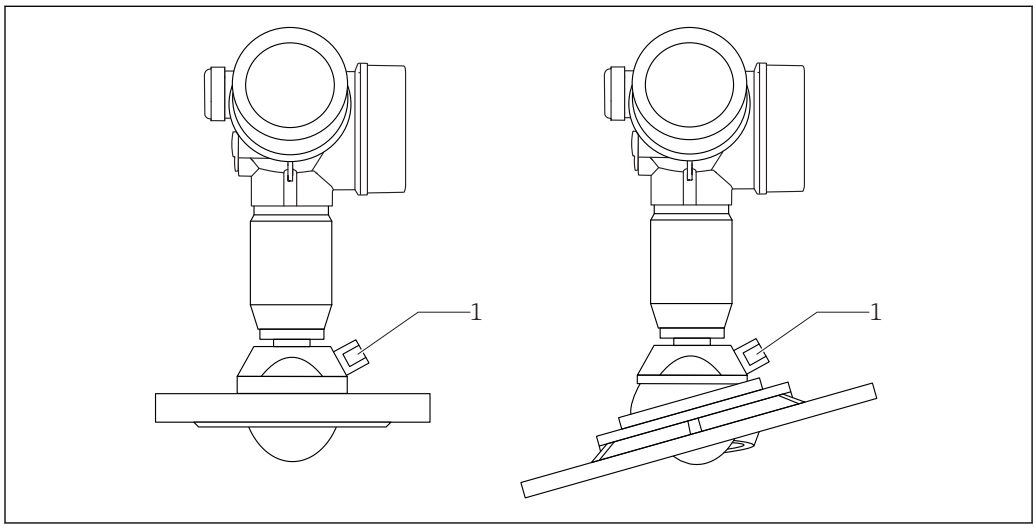

A0032099

1 Purge air connection NPT 1/4" or G 1/4"

Use

In applications with strong dust emissions, the integrated purge air connection can prevent the antenna from becoming clogged. Pulse operation is recommended.

Purge air pressure range

- **Pulse operation** :
  Max. 6 bar (87 psi)
- **Continuous operation**:
  200 to 500 mbar (3 to 7.25 psi)

Always use dry purge air.

In general, purging should only be performed to the extent necessary as excess purging can cause mechanical damage (abrasion).

Container with heat insulation

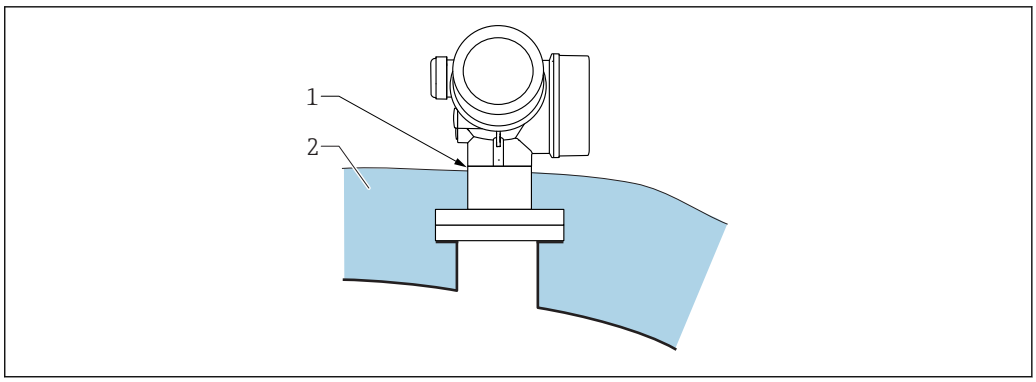

A0032207

If process temperatures are high, the device should be included in the usual container insulation system (2) to prevent the electronics from heating as a result of thermal radiation or convection. The insulation should not be higher than the neck of the device (1).

Environment

Ambient temperature range

Measuring device	−40 to +80 °C (−40 to +176 °F)
Local display	−20 to +70 °C (−4 to +158 °F), the readability of the display may be impaired at temperatures outside the temperature range.

Outdoor operation in strong sunlight:
- Mount the device in the shade.
- Avoid direct sunlight, particularly in warm climatic regions.
- Use a weather protection cover (see accessories).

Ambient temperature limits

The following diagrams only consider functional aspects. Additional restrictions may apply for certified device versions. See the separate Safety Instructions for more information → 📄 79.

In the event of temperature (T_p) at the process connection, the permitted ambient temperature (T_a) is reduced as indicated in the following diagram (temperature derating) in the table header.

FMR67

Antenna [1]
GA:
Drip-off, PTFE DN50

Seal [2]
A3:
FKM Viton GLT, −40 to 80 °C (−40 to 176 °F)

Temperature specifications: °C (°F)

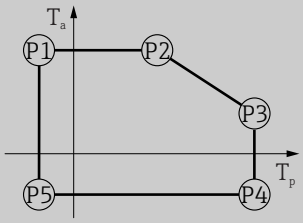

A0032024

Housing type [3]	P1		P2		P3		P4		P5	
	T_p	T_a	T_p	T_a	T_p	T_a	T_p	T_a	T_p	T_a
B: GT18 two-chamber 316L	−40 (−40)	76 (168.8)	76 (168.8)	76 (168.8)	80 (176)	75 (167)	80 (176)	−40 (−40)	−40 (−40)	−40 (−40)
A: GT19 two-chamber Plastic PBT	−40 (−40)	60 (140)	60 (140)	60 (140)	80 (176)	54 (129.2)	80 (176)	−40 (−40)	−40 (−40)	−40 (−40)
C: GT20 two-chamber Aluminum, coated	−40 (−40)	76 (168.8)	76 (168.8)	76 (168.8)	80 (176)	76 (168.8)	80 (176)	−40 (−40)	−40 (−40)	−40 (−40)

1) Feature 070 in the product structure
2) Feature 090 in the product structure
3) Feature 040 in the product structure

FMR67

Antenna [1]
GP:
PTFE flush mount DN80

Seal [2]
A6:
FKM Viton GLT, −40 to 200 °C (−40 to 392 °F)

Temperature specifications: °C (°F)

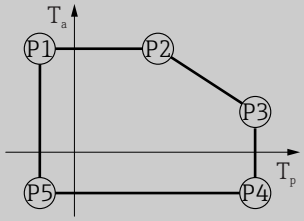

Housing type [3]	P1		P2		P3		P4		P5	
	T_p	T_a	T_p	T_a	T_p	T_a	T_p	T_a	T_p	T_a
B: GT18 two-chamber 316L	−40 (−40)	76 (168.8)	76 (168.8)	76 (168.8)	200 (392)	63 (145.4)	200 (392)	−40 (−40)	−40 (−40)	−40 (−40)
A: GT19 two-chamber Plastic PBT	−40 (−40)	60 (140)	60 (140)	60 (140)	200 (392)	42 (107.6)	200 (392)	−40 (−40)	−40 (−40)	−40 (−40)
C: GT20 two-chamber Aluminum, coated	−40 (−40)	76 (168.8)	76 (168.8)	76 (168.8)	200 (392)	68 (154.4)	200 (392)	−40 (−40)	−40 (−40)	−40 (−40)

1) Feature 070 in the product structure
2) Feature 090 in the product structure
3) Feature 040 in the product structure

FMR67

Antenna [1]
GP:
PTFE flush mount DN80

Seal [2]
A5:
FKM Viton GLT,
−40 to 150 °C (−40 to 302 °F)

Temperature specifications: °C (°F)

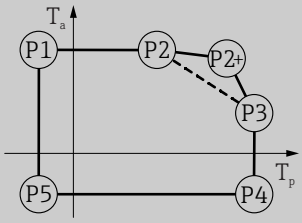

Housing type [3]	P1		P2		P2+		P3		P4		P5	
	T_p	T_a	T_p	T_a	T_p	T_a	T_p	T_a	T_p	T_a	T_p	T_a
B: GT18 two-chamber 316L	−40 (−40)	76 (168.8)	76 (168.8)	76 (168.8)	109 (228.2)	71 (159.8)	150 (302)	47 (116.6)	150 (302)	−40 (−40)	−40 (−40)	−40 (−40)
A: GT19 two-chamber Plastic PBT	−40 (−40)	60 (140)	60 (140)	60 (140)	127 (260.6)	45 (113)	150 (302)	24 (75.2)	150 (302)	−40 (−40)	−40 (−40)	−40 (−40)
C: GT20 two-chamber Aluminum, coated	−40 (−40)	76 (168.8)	76 (168.8)	76 (168.8)	112 (233.6)	72 (161.6)	150 (302)	55 (131)	150 (302)	−40 (−40)	−40 (−40)	−40 (−40)

1) Feature 070 in the product structure
2) Feature 090 in the product structure
3) Feature 040 in the product structure

Storage temperature

−40 to +80 °C (−40 to +176 °F)

Climate class

DIN EN 60068-2-38 (test Z/AD)

Altitude according to IEC61010-1 Ed.3

- Generally up to 2 000 m (6 600 ft) above MSL.
- Above 2 000 m (6 600 ft) if the following conditions are met:
  - Ordering feature 020 "Power supply; Output" = A, B, C, E or G (2-wire versions)
  - Supply voltage U < 35 V
  - Supply voltage of overvoltage category 1

Degree of protection

- With closed housing tested according to:
  - IP68, NEMA6P (24 h at 1.83 m under water surface)
  - For plastic housing with transparent cover (display module): IP68 (24 h at 1.00 m under water surface) [6)]
  - IP66, NEMA4X
- With open housing: IP20, NEMA1
- Display module: IP22, NEMA2

Degree of protection IP68 NEMA6P applies for M12 PROFIBUS PA plugs only when the PROFIBUS cable is plugged in and is also rated IP68 NEMA6P.

Vibration resistance

DIN EN 60068-2-64 IEC 60068-2-64 at 5 to 2 000 Hz: 1.5 $(m/s^2)^2/Hz$

A limited vibration resistance applies according

DIN EN 60068-2-64/IEC 60068-2-64 at 5 to 2 000 Hz of 0.39 $(m/s^2)^2/Hz$,

if the following order features are selected in the product structure at the same time:

- 040 ("Housing"): B ("GT18 two-chamber, 316L)
  and
- 090 ("Seal"): A6 ("FKM Viton GLT, −40 to 200 °C (−40 to 392 °F), incl. gas-tight feedthrough")

Electromagnetic compatibility (EMC)

Electromagnetic compatibility in accordance with all of the relevant requirements outlined in the EN 61326 series and NAMUR Recommendation EMC (NE 21). For details, please refer to the Declaration of Conformity [7)].

A normal device cable suffices if only the analog signal should be used. Use a shielded cable for digital communication (HART/ PA/ FF).

Maximum measured error during EMC testing: <0.5 % of the span. By way of derogation, for devices with a plastic housing and see-through lid (integrated display SD02 or SD03) the measured error can be up to 2 % of the span in the event of strong electromagnetic radiation in the 1 to 2 GHz frequency range.

6) This restriction is valid if the following options of the product structure have been selected at the same time: 030 ("Display, Operation") = C ("SD02") or E ("SD03"); 040 ("Housing") = A ("GT19").
7) Available for download at www.de.endress.com.

Process

Process temperature, process pressure

The pressure ranges indicated can be reduced by the choice of process connection. The nominal pressure (PN) indicated on the nameplate refers to a reference temperature of 20 °C, and of 100 °F for ASME flanges. Observe pressure-temperature dependency.

Please refer to the following standards for the pressure values permitted at higher temperatures:
- EN 1092-1: 2001 Tab. 18
  In terms of their stability-temperature property, the materials 1.4435 and 1.4404 are grouped in EN 1092-1 table 18 under 13E0. The chemical composition of the two materials can be identical.
- ASME B 16.5a – 1998 Tab. 2-2.2 F316
- ASME B 16.5a – 1998 Tab. 2.3.8 N10276
- JIS B 2220

FMR67, Drip-off antenna, PTFE DN50

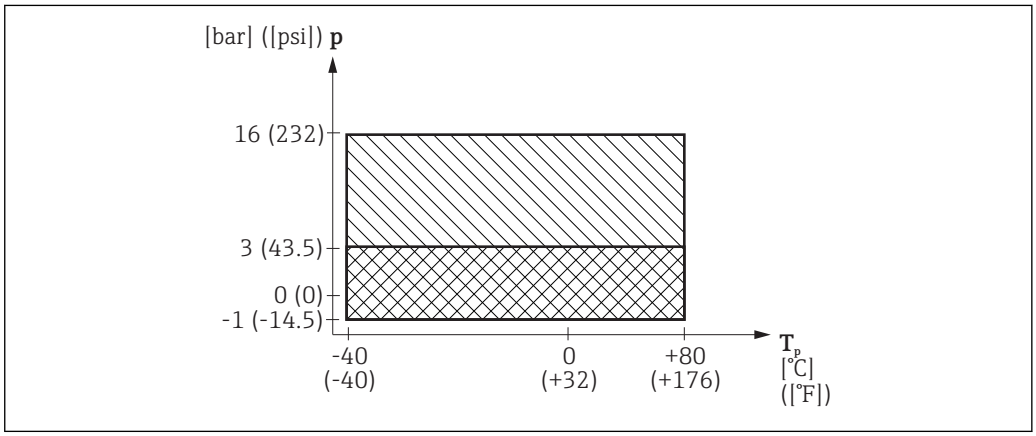

13 FMR67: Permitted range for process temperature and process pressure, Drip-off antenna, PTFE DN50

1 Process connection: flange PP
2 Process connection: thread, flange 316L

FMR67, Drip-off antenna, PTFE DN50

Feature 100 "Process connection"	Process temperature range	Process pressure range
▪ GGJ: Thread ISO228 G1-1/2 ▪ RGJ: Thread ANSI MNPT1-1/2	−40 to +80 °C (−40 to +176 °F)	p_{rel} = −1 to 16 bar (−14.5 to 232 psi) p_{abs} < 17 bar (246 psi) [1]
▪ XJJ: UNI flange 3"/DN80/80A, 316L ▪ XKJ: UNI flange 4"/DN100/100A, 316L ▪ XLJ: UNI flange 6"/DN150/150A, 316L ▪ XJG: UNI flange 3"/DN80/80A, PP ▪ XKG: UNI flange 4"/DN100/100A, PP ▪ XLG: UNI flange 6"/DN150/150A, PP		p_{rel} = −1 to 3 bar (−14.5 to 43.5 psi) p_{abs} < 4 bar (58 psi)

1) The pressure range may be further restricted in the event of a CRN approval

FMR67, flush mount antenna, PTFE DN80, standard flange 316L

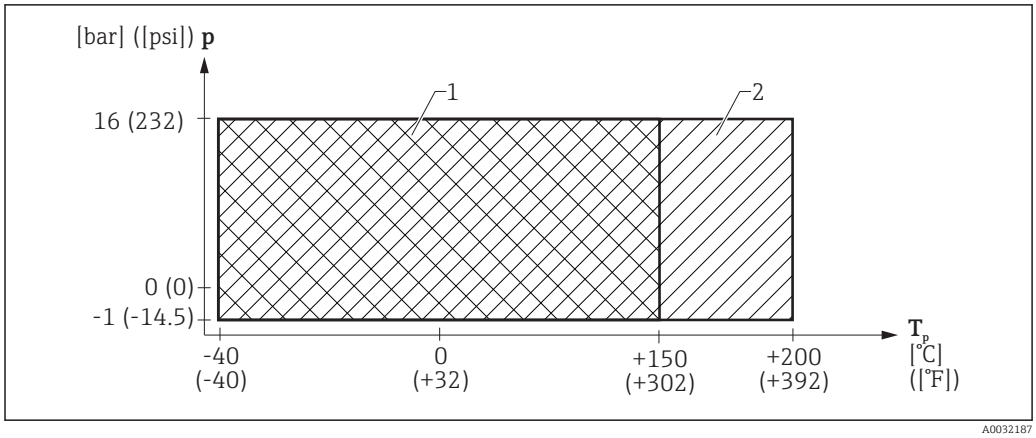

14 FMR67: Permitted range for process temperature and process pressure, antenna, PTFE DN80, standard flange 316L

1 Feature 90, seal: A5, FKM Viton GLT
2 Feature 90, seal: A6, FKM Viton GLT

FMR67, PTFE DN80, standard flange 316L

Feature 100 "Process connection"	Feature 90 "Seal"	Process temperature range	Process pressure range
▪ AGJ: NPS 3" Cl.150 RF, 316/316L ▪ AHJ: NPS 4" Cl.150 RF, 316/316L ▪ CGJ: DN80 PN10/16 B1, 316L ▪ CHJ: DN100 PN10/16 B1, 316L ▪ KGJ: 10K 80A RF, 316L ▪ KHJ: 10K 100A RF, 316L	A5, FKM Viton GLT	−40 to +150 °C (−40 to +302 °F)	p_{rel} = −1 to 16 bar (−14.5 to 232 psi) [1]
	A6, FKM Viton GLT	−40 to +200 °C (−40 to +392 °F)	

1) The pressure range may be further restricted in the event of a CRN approval

FMR67, flush mount antenna, PTFE DN80, UNI flange 316L

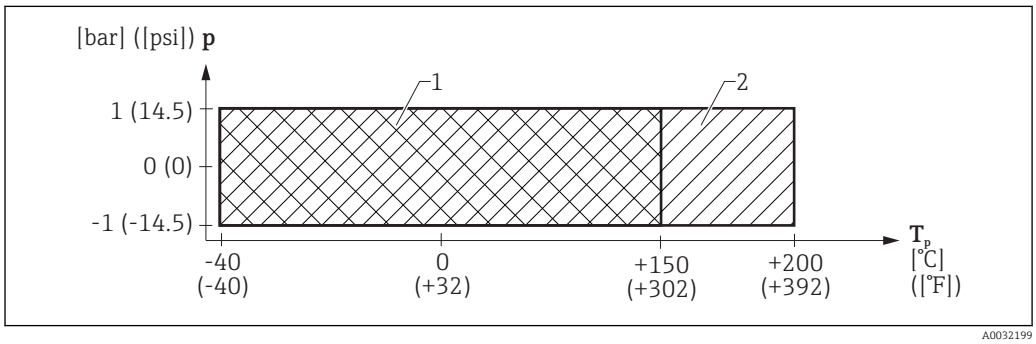

15 FMR67: Permitted range for process temperature and process pressure, antenna, PTFE DN80, UNI flange 316L

1 Feature 90, seal: A5, FKM Viton GLT
2 Feature 90, seal: A6, FKM Viton GLT

FMR67, PTFE DN80, UNI flange 316L

Feature 100 "Process connection"	Feature 90 "Seal"	Process temperature range	Process pressure range
▪ X3J: UNI flange DN200/8"/200A, 316L ▪ X5J: UNI flange DN250/10"/250A, 316L	A5, FKM Viton GLT	−40 to +150 °C (−40 to +302 °F)	p_{rel} = −1 to 1 bar (−14.5 to 14.5 psi) p_{abs} < 2 bar (29 psi) [1]
	A6, FKM Viton GLT	−40 to +200 °C (−40 to +392 °F)	

1) The pressure range may be further restricted in the event of a CRN approval

FMR67, flush mount antenna, PTFE DN80, UNI flange, ALU, adjustable

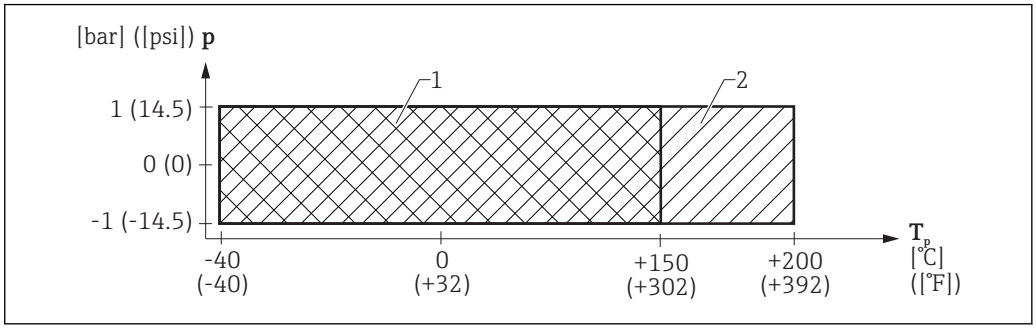

16 *FMR67: Permitted range for process temperature and process pressure, antenna, PTFE DN80, UNI flange, ALU, adjustable*

1 Feature 90, seal: A5, FKM Viton GLT
2 Feature 90, seal: A6, FKM Viton GLT

FMR67, PTFE DN80, UNI flange, ALU, adjustable

Feature 100 "Process connection"	Feature 90 "Seal"	Process temperature range	Process pressure range
▪ XCA: Alignment unit, UNI 4"/DN100/100A, aluminum ▪ XDA: Alignment unit, UNI 6"/DN150/150A, aluminum ▪ XEA: Alignment unit, UNI 8"/DN200/200A, aluminum ▪ XFA: Alignment unit, UNI 10"/DN250/250A, aluminum	A5, FKM Viton GLT	−40 to +150 °C (−40 to +302 °F)	p_{rel} = −1 to 1 bar (−14.5 to 14.5 psi) [1]
	A6, FKM Viton GLT	−40 to +200 °C (−40 to +392 °F)	

1) The pressure range may be further restricted in the event of a CRN approval

Dielectric constant

For bulk solids

$\varepsilon_r \geq 1.6$

Please contact Endress+Hauser for applications with lower dielectric constants than indicated.

For dielectric constants (DC values) of many media commonly used in various industries refer to:
- the Endress+Hauser DC manual (CP01076F)
- the Endress+Hauser "DC Values App" (available for Android and iOS)

Mechanical construction

Dimensions

Dimensions of the electronics housing

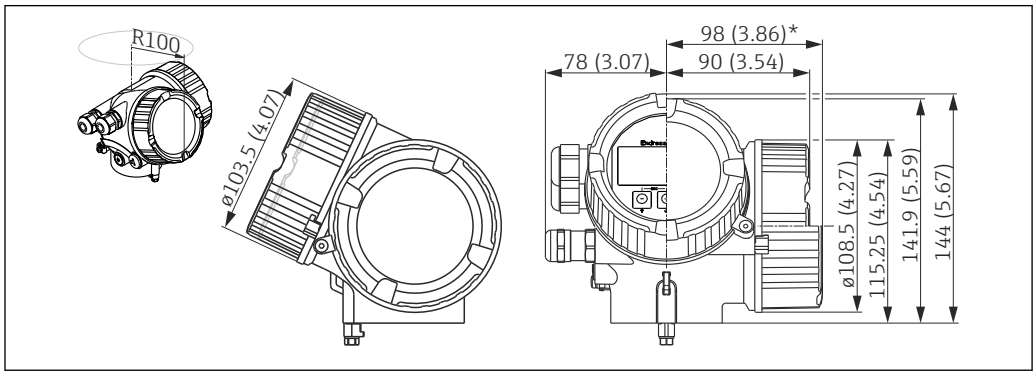

17 *Housing GT18 (316L); Dimensions in mm (in)*

**for devices with integrated overvoltage protection.*

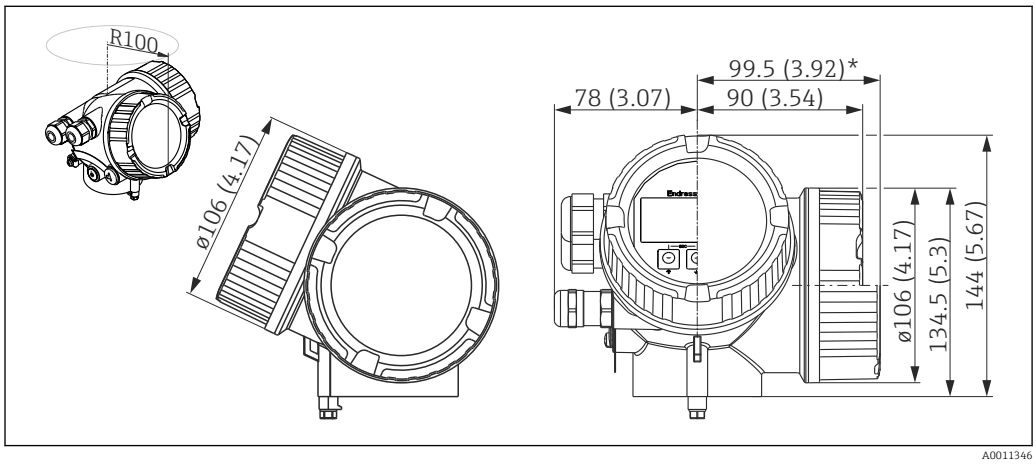

18 *Housing GT19 (Plastics PBT); Dimensions in mm (in)*

**for devices with integrated overvoltage protection.*

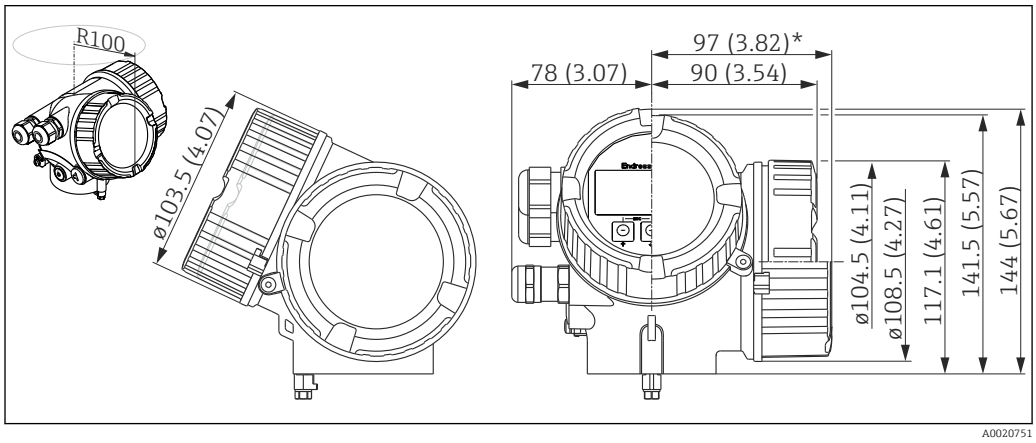

19 *Housing GT20 (Alu coated); Dimensions in mm (in)*

**for devices with integrated overvoltage protection.*

FMR67 Drip-off antenna, w/o purge air connection

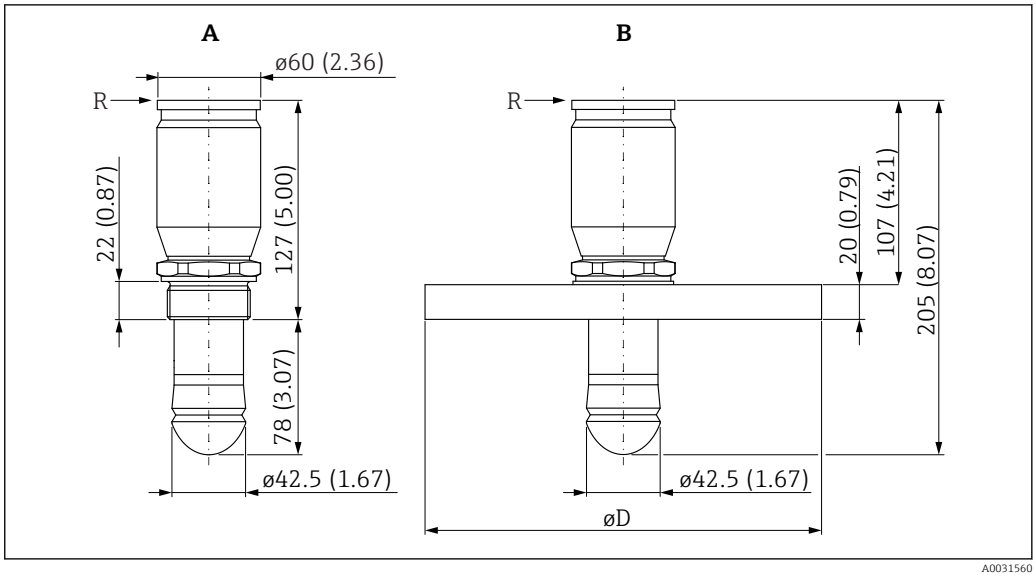

20 Dimensions: mm (in)

A Process connection: G1-1/2" or MNPT1-1/2" thread
B Process connection: UNI flange 3"/DN80/80A to 6"/DN150/150A
R Bottom edge of housing

Feature 100: process connection	Suitable for	øD
▪ XJG: UNI flange 3"/DN80/80A, PP ▪ XJJ: UNI flange 3"/DN80/80A, 316L	▪ 3" 150lbs ▪ DN80 PN16 ▪ 10K 80A	200 mm (7.87 in)
▪ XKG: UNI flange 4"/DN100/100A, PP ▪ XKJ: UNI flange 4"/DN100/100A, 316L	▪ 4" 150lbs ▪ DN100 PN16 ▪ 10K 100A	228.6 mm (9 in)
▪ XLG: UNI flange 6"/DN150/150A, PP ▪ XLJ: UNI flange 6"/DN150/150A, 316L	▪ 6" 150lbs ▪ DN150 PN16 ▪ 10K 150A	285 mm (11.22 in)

FMR67 Drip-off antenna, purge air connection

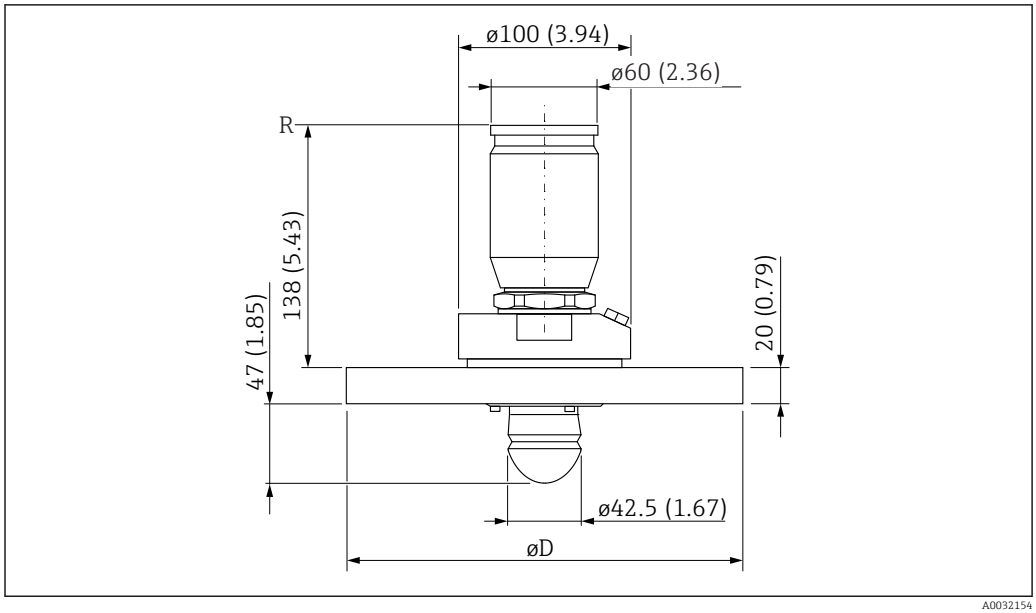

21 Dimensions: mm (in)

R Bottom edge of housing

Feature 100: process connection	Suitable for	øD
XJG: UNI flange 3"/DN80/80A, PP	▪ 3" 150lbs ▪ DN80 PN16 ▪ 10K 80A	200 mm (7.87 in)
XKG: UNI flange 4"/DN100/100A, PP	▪ 4" 150lbs ▪ DN100 PN16 ▪ 10K 100A	228.6 mm (9 in)
XLG: UNI flange 6"/DN150/150A, PP	▪ 6" 150lbs ▪ DN150 PN16 ▪ 10K 150A	285 mm (11.22 in)

FMR67 DN80 antenna, purge air connection

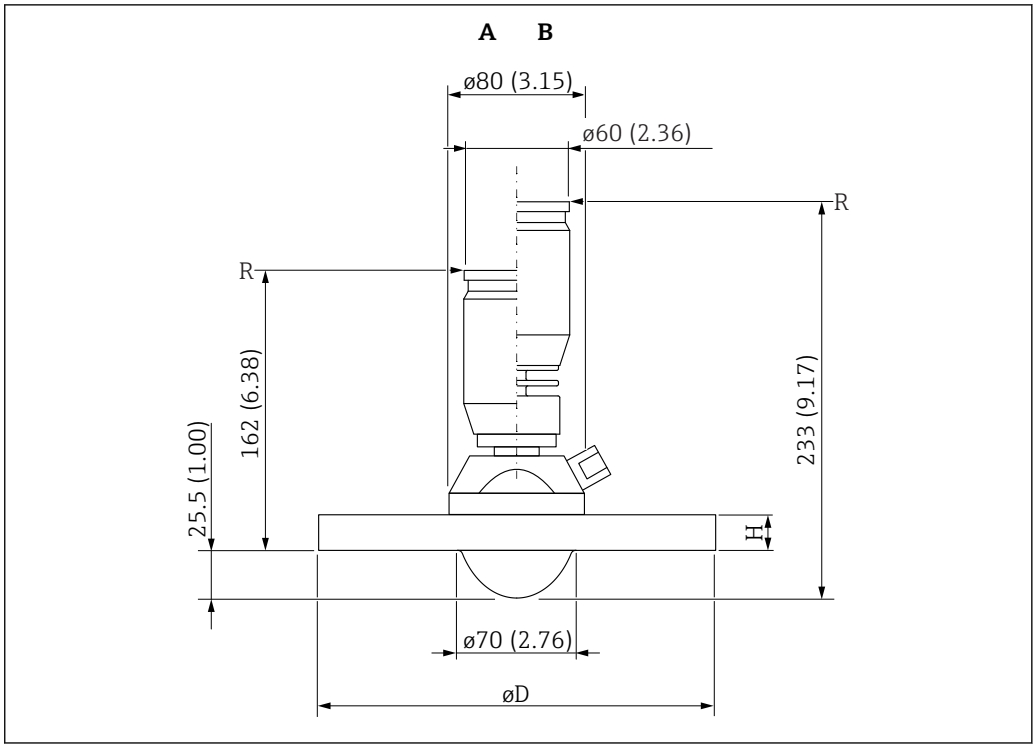

22 Dimensions: mm (in)

A Seal: FKM Viton GLT, -40 to 150°C/-40 to 302°F
B Seal: FKM Viton GLT, -40 to 200°C/-40 to 392°F
R Bottom edge of housing

Feature 100 "Process connection"	Suitable for	Material	Pressure rating	øD	H
AGJ: NPS 3" Cl.150 RF, 316/316L	ASME B16.5 NPS 3" Cl.150 RF	316/316L	CL.150	190.5 mm (7.5 in)	23.9 mm (0.94 in)
AHJ: NPS 4" Cl.150 RF, 316/316L	ASME B16.5 NPS 4" Cl.150 RF	316/316L	CL.150	228.6 mm (9 in)	23.9 mm (0.94 in)
CGJ: DN80 PN10/16 B1, 316L	EN1092-1 DN80 PN10/16 B1	316L	PN10/16	200 mm (7.87 in)	20 mm (0.79 in)
CHJ: DN100 PN10/16 B1, 316L	EN1092-1 DN100 PN10/16 B1	316L	PN10/16	220 mm (8.66 in)	20 mm (0.79 in)
KGJ: 10K 80A RF, 316L	JIS B2220 10K 80A RF	316L	10K	185 mm (7.28 in)	18 mm (0.71 in)
KHJ: 10K 100A RF, 316L	JIS B2220 10K 100A RF	316L	10K	210 mm (8.27 in)	18 mm (0.71 in)

FMR67 DN80 antenna, purge air connection, UNI flange 316L

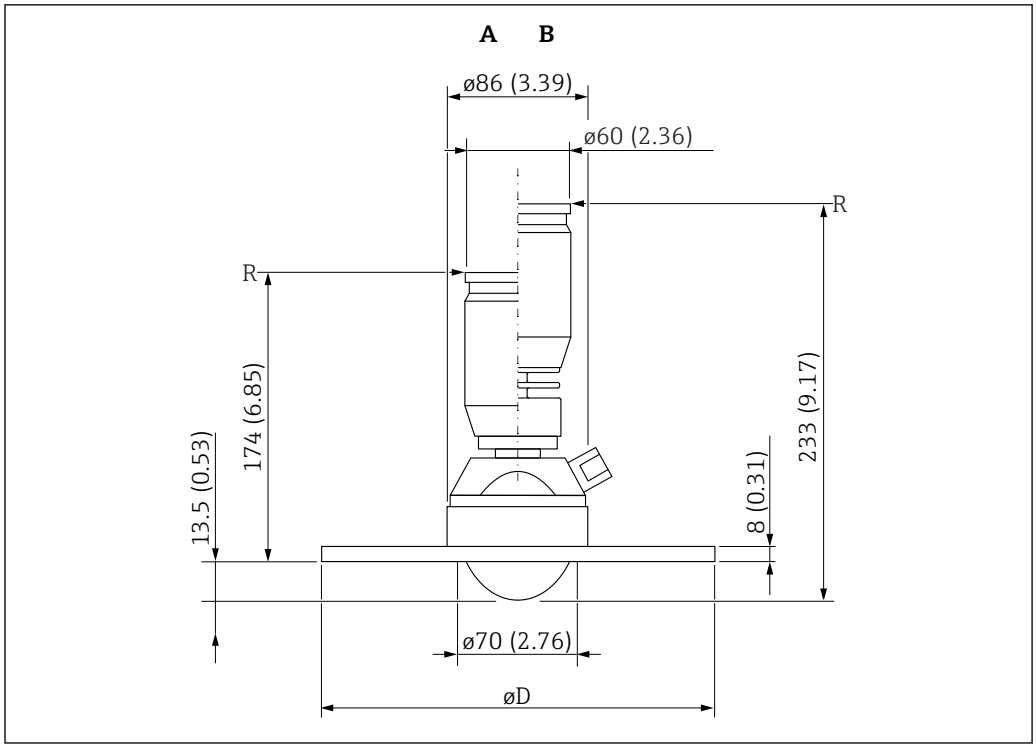

23 Dimensions: mm (in)

A Seal: FKM Viton GLT, -40 to 150°C/-40 to 302°F
B Seal: FKM Viton GLT, -40 to 200°C/-40 to 392°F
R Bottom edge of housing

Feature 100 "Process connection"	Suitable for	Pressure rating	øD
X3J: UNI flange DN200/8"/200A, 316L	▪ 8" 150lbs ▪ DN200 PN16 ▪ 10K 200A	p_{abs} < 2 bar (29 psi)	340 mm (13.39 in)
X5J: UNI flange DN250/10"/250A, 316L	▪ 10" 150lbs ▪ DN250 PN16 ▪ 10K 250A	p_{abs} < 2 bar (29 psi)	405 mm (15.94 in)

FMR67 DN80 antenna, purge air connection, UNI flange with alignment device

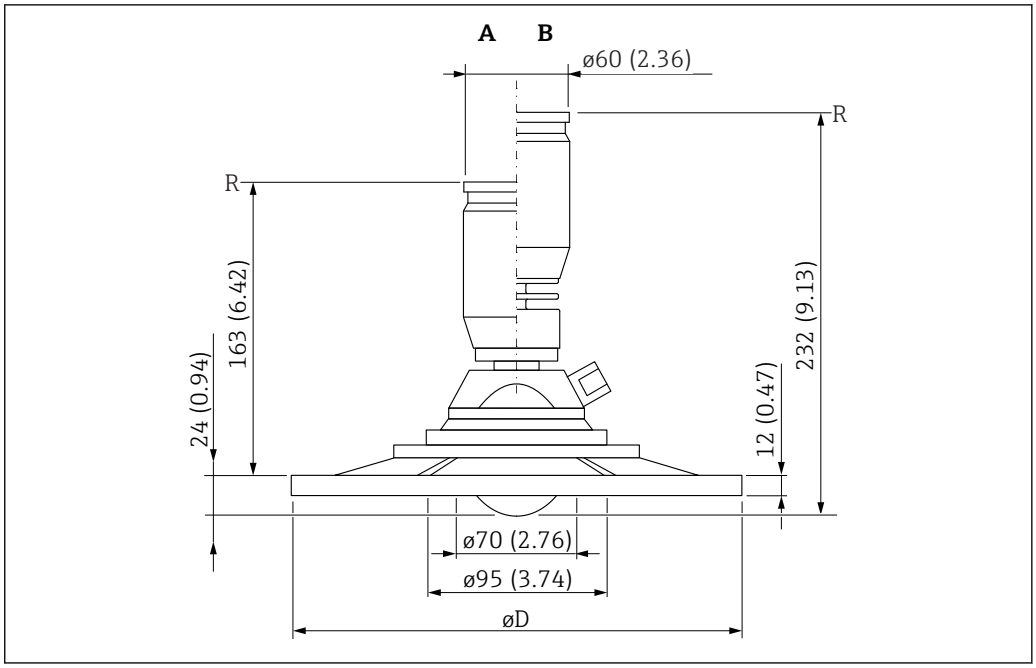

24 Dimensions: mm (in)

A Seal: FKM Viton GLT, -40 to 150°C/-40 to 302°F
B Seal: FKM Viton GLT, -40 to 200°C/-40 to 392°F
R Bottom edge of housing

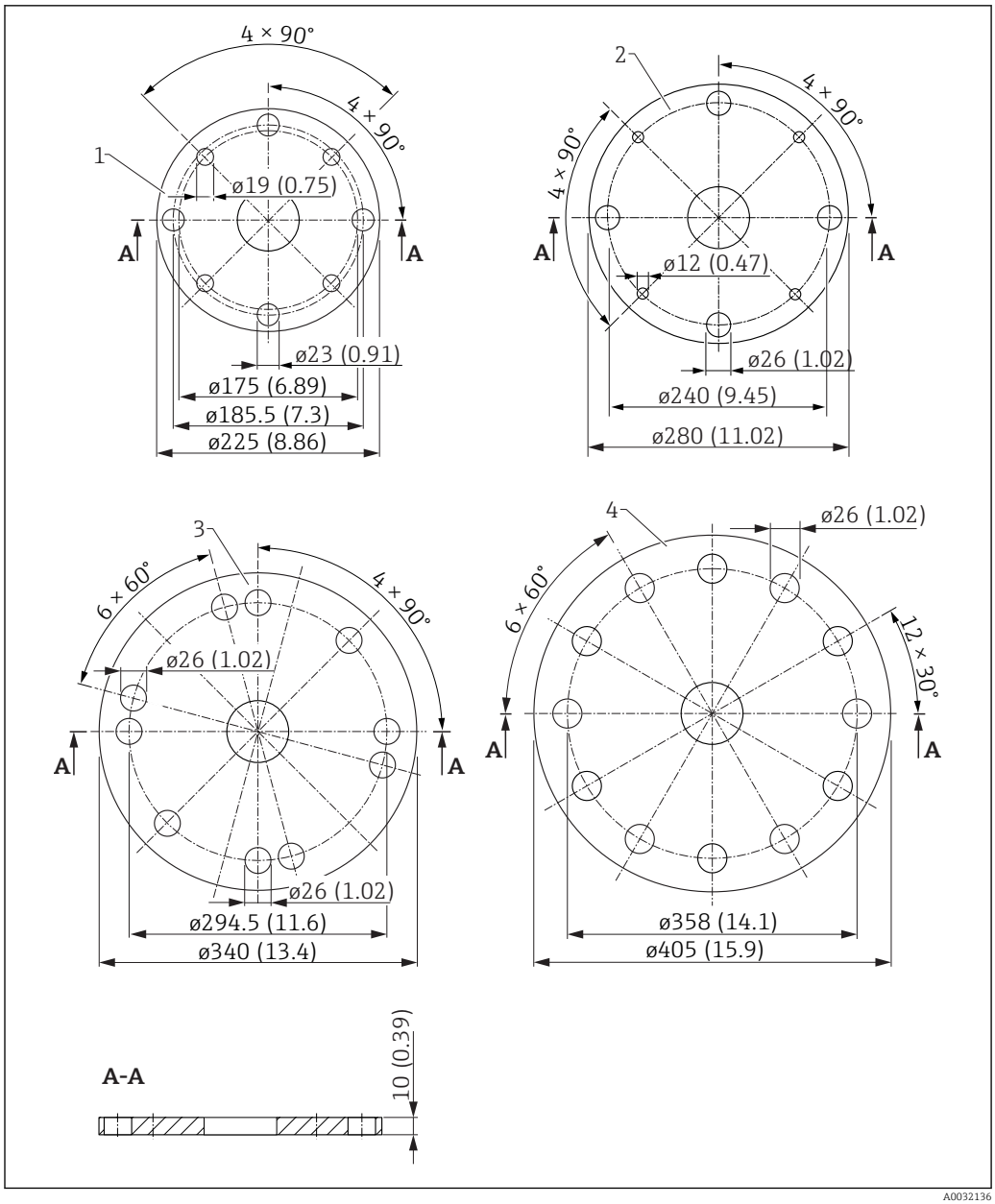

A0032136

Item	Feature 100: process connection	Suitable for	Material
1:	XCA: alignment device, UNI 4"/DN100/100A, max 14.5lbs/PN1/1K	▪ 4" 150lbs ▪ DN100 PN16 ▪ 10K 100A	Aluminum
2:	XDA: alignment device, UNI 6"/DN150/150A, max 14.5lbs/PN1/1K	▪ 6" 150lbs ▪ DN150 PN16 ▪ 10K 150A	Aluminum
3:	XEA: alignment device, UNI 8"/DN200/200A, max 14.5lbs/PN1/1K	▪ 8" 150lbs ▪ DN200 PN16 ▪ 10K 200A	Aluminum
4:	XFA: alignment device, UNI 10"/DN250/250A, max 14.5lbs/PN1/1K	▪ 10" 150lbs ▪ DN250 PN16 ▪ 10K 250A	Aluminum

The number of bolts is reduced in some cases. To match different standards the bores are enlarged. Therefore the bolts should be aligned centrally to the counter flange before tightening.

Weight

Housing

Part	Weight
GT18 housing - stainless steel	Approx. 4.5 kg (9.9 lb)
GT19 housing - plastic	Approx. 1.2 kg (2.7 lb)
GT20 housing - aluminum	Approx. 1.9 kg (4.2 lb)

Antenna and process connection

Device	Antenna [1]	Weight of antenna / process connection
FMR67	GA: Drip-off, PTFE DN50	Max. 2 kg (4.4 lb) + flange weight [2]
	GP: PTFE flush mount DN80	Max. 3.5 kg (7.72 lb) + flange weight [2] Flange weight for process connection with alignment unit, see the following table→ 47

1) Order code 070
2) For flange weights (316/316L) see Technical Information TI00426F.

Process connection alignment unit

Antenna [1]	Process connection [2]	Flange weight incl. clamping ring
GP: PTFE flush mount DN80	XCA: Alignment unit, UNI 4"/DN100/100, aluminum	1.65 kg (3.64 lb)
	XDA: Alignment unit, UNI 6"/DN150/150, aluminum	2.45 kg (5.40 lb)
	XEA: Alignment unit, UNI 8"/DN200/200, aluminum	3.45 kg (7.61 lb)
	XFA: Alignment unit, UNI 10"/DN250/250, aluminum	4.95 kg (10.91 lb)

1) Order code 070
2) Order code 100

Materials: GT18 housing (stainless steel, corrosion-resistant)

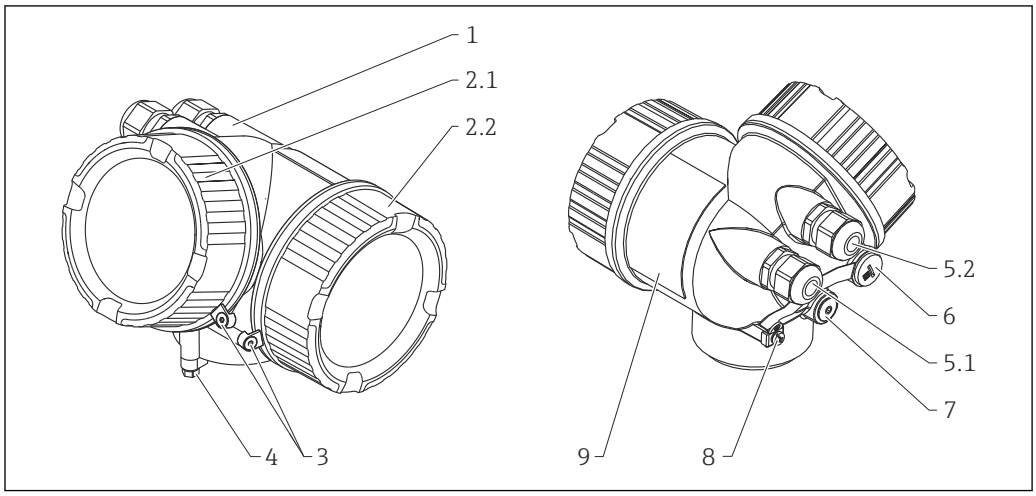

A0013788

No.	Part	Material
1	Housing	CF3M similar to 316L/1.4404
2.1	Cover of the electronics compartment	▪ Cover: CF3M (similar to 316L/1.4404) ▪ Window: glass ▪ Cover seal: NBR ▪ Seal of the window: NBR ▪ Thread-coating: Graphite-based lubricant varnish
2.2	Cover of the terminal compartment	▪ Cover: CF3M (similar to 316L/1.4404) ▪ Cover seal: NBR ▪ Thread-coating: Graphite-based lubricant varnish
3	Cover lock	▪ Screw: A4 ▪ Clamp: 316L (1.4404)
4	Lock at the housing neck	▪ Screw: A4-70 ▪ Clamp: 316L (1.4404)
5.1	Dummy plug, cable gland, adapter or plug (depending on the device version)	▪ Dummy plug, depending on the device version: – PE – PBT-GF ▪ Cable gland: 316L (1.4404) or nickel-plated brass ▪ Adapter: 316L (1.4404/1.4435) ▪ Seal: EPDM ▪ M12 plug: Nickel-plated brass [1)] ▪ 7/8" plug: 316 (1.4401) [2)]
5.2	Dummy plug, cable gland or adapter (depending on the device version)	▪ Dummy plug: 316L (1.4404) ▪ Cable gland: 316L (1.4404) or nickel-plated brass ▪ Adapter: 316L (1.4404/1.4435) ▪ Seal: EPDM
6	Dummy plug or M12 socket (depending on the device version)	▪ Dummy plug: 316L (1.4404) ▪ M12 socket: 316L (1.4404)
7	Pressure relief stopper	316L (1.4404)
8	Ground terminal	▪ Screw: A4 ▪ Spring washer: A4 ▪ Clamp: 316L (1.4404) ▪ Holder: 316L (1.4404)
9	Nameplate	▪ Plate: 316L (1.4404) ▪ Groove pin: A4 (1.4571)

1) For the version with M12 plug the sealing material is Viton.
2) For the version with 7/8" plug, the sealing material is NBR.

Materials: GT19 housing (plastic)

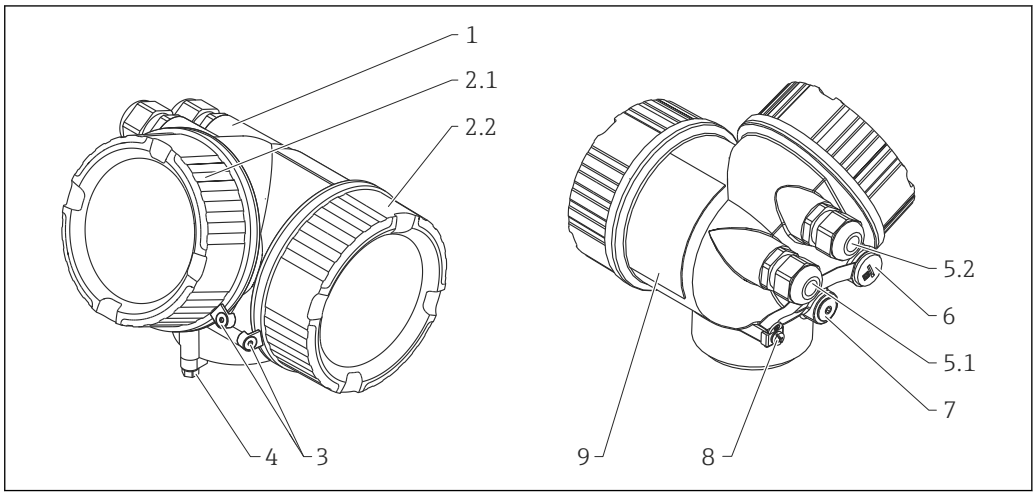

A0013788

No.	Part	Material
1	Housing	PBT
2.1	Cover of the electronics compartment	▪ Cover glass: PC ▪ Cover frame: PBT-PC ▪ Cover seal: EPDM ▪ Thread-coating: Graphite-based lubricant varnish
2.2	Cover of the terminal compartment	▪ Cover: PBT ▪ Cover seal: EPDM ▪ Thread-coating: Graphite-based lubricant varnish
4	Lock at the housing neck	▪ Screw: A4-70 ▪ Clamp: 316L (1.4404)
5.1	Dummy plug, cable gland, adapter or plug (depending on the device version)	▪ Dummy plug, depending on the device version: – PE – PBT-GF ▪ Cable gland, depending on the device version: – Nickel-plated brass (CuZn) – PA ▪ Adapter: 316L (1.4404/1.4435) ▪ Seal: EPDM ▪ M12 plug: Nickel-plated brass [1)] ▪ 7/8" plug: 316 (1.4401) [2)]
5.2	Dummy plug, cable gland or adapter (depending on the device version)	▪ Dummy plug, depending on the device version: – PE – PBT-GF – Nickel-plated steel ▪ Cable gland, depending on the device version: – Nickel-plated brass (CuZn) – PA ▪ Adapter: 316L (1.4404/1.4435) ▪ Seal: EPDM
6	Dummy plug or M12 socket (depending on the device version)	▪ Dummy plug: Nickel-plated brass (CuZn) ▪ M12 socket: Nickel-plated GD-Zn
7	Pressure relief stopper	Nickel-plated brass (CuZn)
8	Ground terminal	▪ Screw: A2 ▪ Spring washer: A4 ▪ Clamp: 304 (1.4301) ▪ Holder: 304 (1.4301)
9	Adhesive nameplate	Plastic

1) For the version with M12 plug the sealing material is Viton.
2) For the version with 7/8" plug, the sealing material is NBR.

Materials: GT20 housing (die-cast aluminum, powder-coated, seawater-resistant)

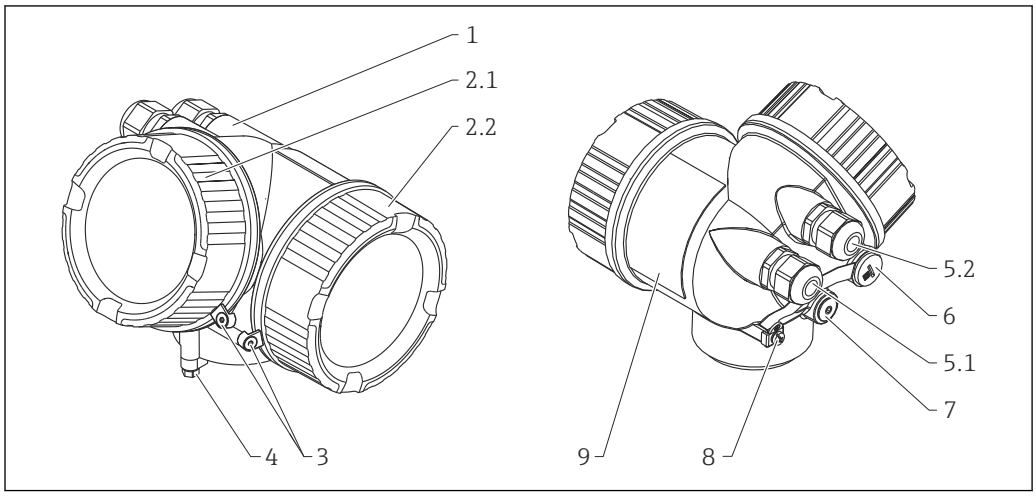

A0013788

Nr.	Part	Material
1	Housing, RAL 5012 (blue)	▪ Housing: AlSi10Mg(<0,1% Cu) ▪ Coating: Polyester
2.1	Cover of the electronics compartment; RAL 7035 (gray)	▪ Cover: AlSi10Mg(<0,1% Cu) ▪ Window: Glass ▪ Cover seal: NBR ▪ Seal of the window: NBR ▪ Thread-coating: Graphite-based lubricant varnish
2.2	Cover of the terminal compartment; RAL 7035 (gray)	▪ Cover: AlSi10Mg(<0,1% Cu) ▪ Cover seal: NBR ▪ Thread-coating: Graphite-based lubricant varnish
3	Cover lock	▪ Screw: A4 ▪ Clamp: 316L (1.4404)
4	Lock at the housing neck	▪ Screw: A4-70 ▪ Clamp: 316L (1.4404)
5.1	Dummy plug, cable gland, adapter or plug (depending on the device version)	▪ Dummy plug, depending on the device version: – PE – PBT-GF ▪ Cable gland, depending on the device version: – Nickel-plated brass (CuZn) – PA ▪ Adapter: 316L (1.4404/1.4435) ▪ Seal: EPDM ▪ M12 plug: Nickel-plated brass [1)] ▪ 7/8" plug: 316 (1.4401) [2)]
5.2	Dummy plug, cable gland or adapter (depending on the device version)	▪ Dummy plug, depending on the device version: – PE – PBT-GF – Nickel-plated steel ▪ Cable gland, depending on the device version: – Nickel-plated brass (CuZn) – PA ▪ Adapter: 316L (1.4404/1.4435) ▪ Seal: EPDM
6	Dummy plug or M12 socket (depending on the device version)	▪ Dummy plug : Nickel-plated brass (CuZn) ▪ M12 socket: Nickel-plated GD-Zn
7	Pressure relief stopper	Nickel-plated brass (CuZn)

Nr.	Part	Material
8	Ground terminal	▪ Screw: A2 ▪ Spring washer: A2 ▪ Clamp: 304 (1.4301) ▪ Holder: 304 (1.4301)
9	Adhesive nameplate	Plastic

1) For the version with M12 plug the sealing material is Viton.
2) For the version with 7/8" plug, the sealing material is NBR.

Materials: antenna and process connection

FMR67

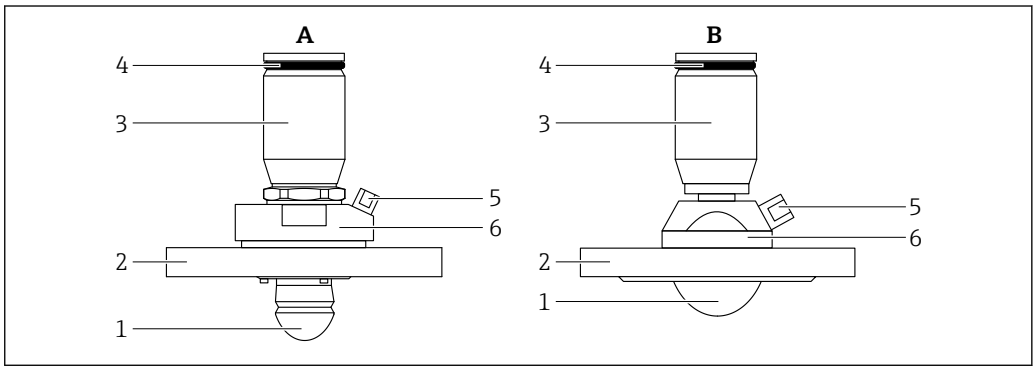

A Antenna Drip-off DN50
B Antenna flush mount DN80

No.	Component part	Material
1	Antenna	PTFE
	Seals	Viton: FKM
2	Flange / process connection	A (antenna Drip-off DN50): PP
		B (antenna flush mount DN80): 316L / 1.4404
3	Antenna adapter, housing adapter	316L / 1.4404
4	Housing seal	EPDM
5	Threaded adapter, screw plug	316L / 1.4404
6	integrated purge air adapter	316L / 1.4404
	Threaded fasteners	A4-70 A2-70

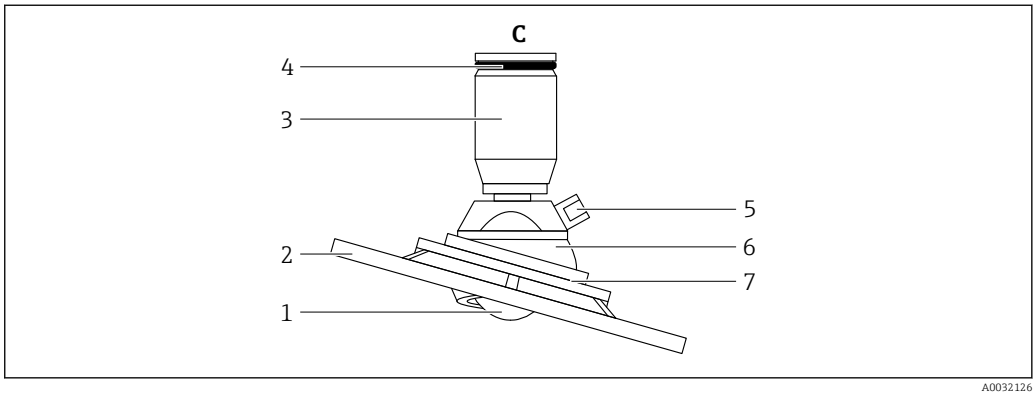

C Antenna flush mount DN80 with alignment device

No.	Component part	Material
1	Antenna	PTFE
	Seals	Viton: FKM
2	Flange / process connection	Aluminum
3	Antenna adapter, housing adapter	316L / 1.4404
4	Housing seal	EPDM
5	Threaded adapter, screw plug Purge air adapter	316L / 1.4404
6	Sensor adapter with alignment device	316L / 1.4404
7	Lock washer	3.1645 / aluminum
	Threaded fasteners	A4-70 A2-70

Materials: Weather protection cover

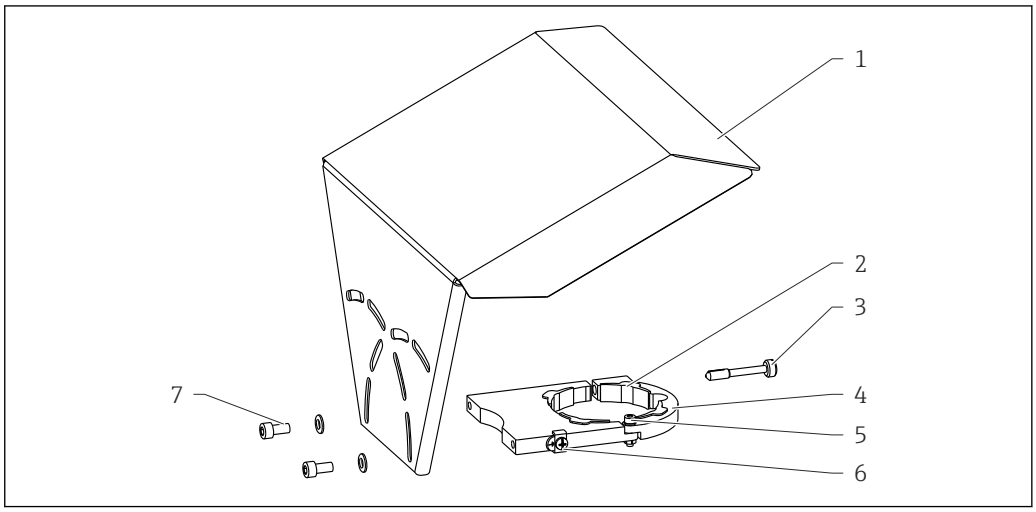

A0015473

No	Part: Material
1	Protection cover: 316L (1.4404)
2	Molded rubber part (4x): EPDM
3	Clamping screw: 316L (1.4404) + carbon fibre
4	Bracket: 316L (1.4404)
5	▪ Cheese head screw: A4-70 ▪ Nut: A4 ▪ Spring washer: A4
6	Ground terminal ▪ Screw: A4 ▪ Spring washer: A4 ▪ Clamp: 316L (1.4404) ▪ Holder: 316L (1.4404)
7	▪ Washer: A4 ▪ Cheese head screw: A4-70

Operability

Operating concept

Operator-oriented menu structure for user-specific tasks
- Commissioning
- Operation
- Diagnostics
- Expert level

Operating languages
- English
- Deutsch
- Français
- Español
- Italiano
- Nederlands
- Portuguesa
- Polski
- русский язык (Russian)
- Svenska
- Türkçe
- 中文 (Chinese)
- 日本語 (Japanese)
- 한국어 (Korean)
- Bahasa Indonesia
- tiếng Việt (Vietnamese)
- čeština (Czech)

Feature 500 of the product structure determines which of these languages is preset on delivery.

Quick and save commissioning
- Interactive wizard with graphical interface for easy commissioning via FieldCare/DeviceCare
- Menu guidance with brief explanations of the individual parameter functions
- Standardized operation at the device and in the operating tools

Integrated data storage device (HistoROM)
- Enables transfer of configuration when changing electronic modules
- Records up to 100 event messages in the device
- Records up to 1000 measured values in the device
- Saves the signal curve on commissioning which can later be used as a reference.

Efficient diagnostics increase measurement reliability
- Remedy information is integrated in plain text
- Diverse simulation options and line recorder functions

Local operation

Operation with	*Pushbuttons*	*Touch Control*
Order code for "Display; Operation"	Option **C** "SD02"	Option **E** "SD03"
	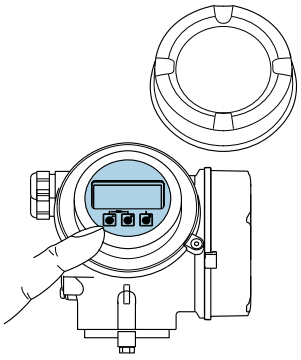 A0032219	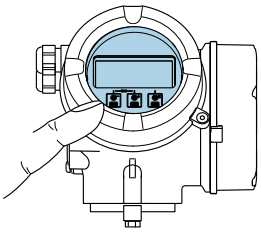 A0032221
Display elements	4-line display	4-line display white background lighting; switches to red in event of device error

	Format for displaying measured variables and status variables can be individually configured	
	Permitted ambient temperature for the display: −20 to +70 °C (−4 to +158 °F) The readability of the display may be impaired at temperatures outside the temperature range.	
Operating elements	local operation with 3 push buttons (⊞, ⊟, Ⓔ)	external operation via touch control; 3 optical keys: ⊞, ⊟, Ⓔ
	Operating elements also accessible in various hazardous areas	
Additional functionality	Data backup function The device configuration can be saved in the display module.	
	Data comparison function The device configuration saved in the display module can be compared to the current device configuration.	
	Data transfer function The transmitter configuration can be transmitted to another device using the display module.	

Operation with remote display and operating module FHX50

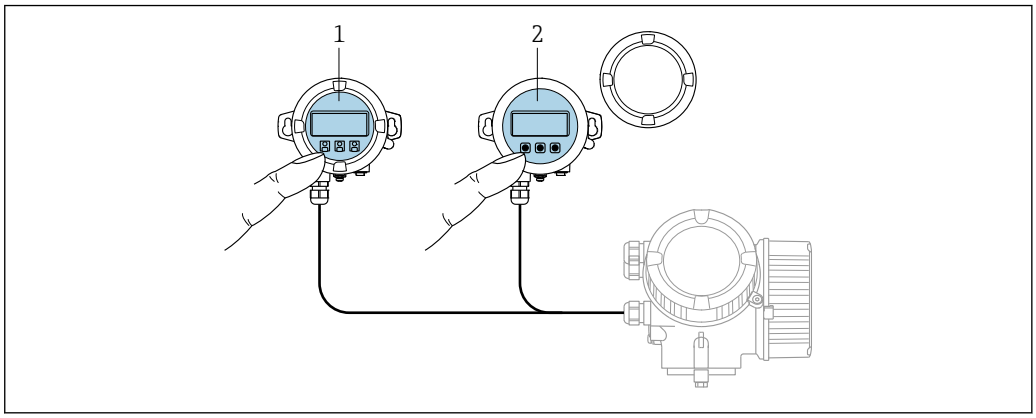

A0032215

25 FHX50 operating options

1 *Housing of the remote display and operating module FHX50*
2 *Display and operating module SD02, push buttons; cover must be removed*
3 *Display and operating module SD03, optical keys; can be operated through the glass of the cover*

Remote operation

Via HART protocol

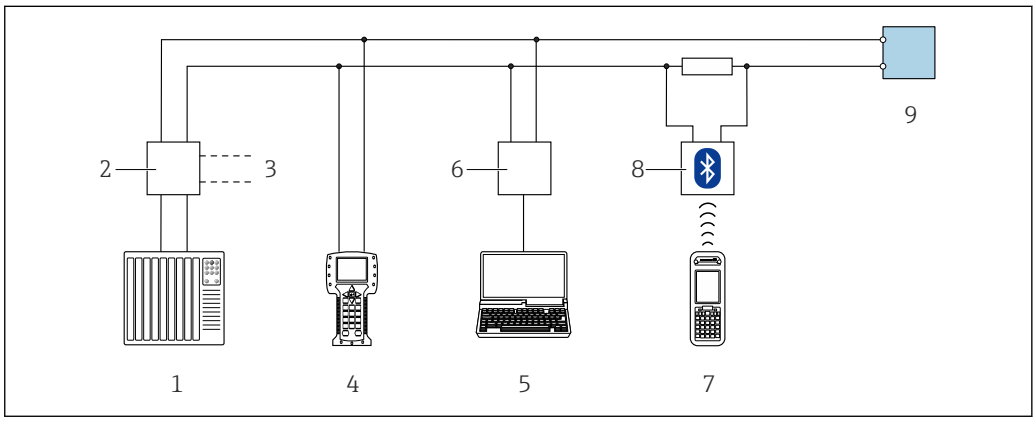

A0028746

26 Options for remote operation via HART protocol

1 *PLC (programmable logic controller)*
2 *Transmitter power supply unit, e.g. RN221N (with communication resistor)*
3 *Connection for Commubox FXA191, FXA195 and Field Communicator 375, 475*
4 *Field Communicator 475*
5 *Computer with operating tool (e.g. FieldCare, AMS Device Manager, SIMATIC PDM)*
6 *Commubox FXA191 (RS232) or FXA195 (USB)*
7 *Field Xpert SFX350/SFX370*
8 *VIATOR Bluetooth modem with connecting cable*
9 *Transmitter*

Via service interface (CDI)

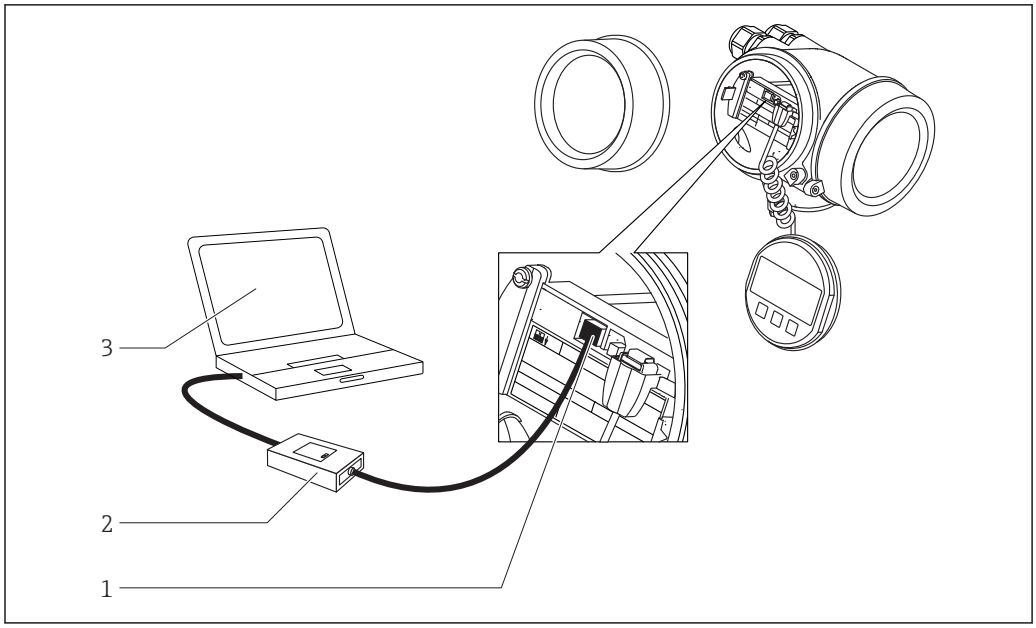

1 Service interface (CDI) of the measuring device (= Endress+Hauser Common Data Interface)
2 Commubox FXA291
3 Computer with "FieldCare" operating tool

System integration via Fieldgate

Vendor Managed Inventory

By using Fieldgates to interrogate tank or silo levels remotely, suppliers of raw materials can provide their regular customers with information about the current supplies at any time and, for example, account for them in their own production planning. For their part, the Fieldgates monitor the configured level limits and, if required, automatically activate the next supply. The spectrum of options here ranges from a simple purchasing requisition via e-mail through to fully automatic order administration by coupling XML data into the planning systems on both sides.

Remote maintenance of measuring equipment

Fieldgates not only transfer the current measured values, they also alert the responsible standby personnel, if required, via e-mail or SMS. In the event of an alarm or also when performing routine checks, service technicians can diagnose and configure connected HART devices remotely. All that is required for this is the corresponding HART operating tool (e.g. FieldCare, ...) for the connected device. Fieldgate passes on the information transparently, so that all options for the respective operating software are available remotely. Some on-site service operations can be avoided by using remote diagnosis and remote configuration and all others can at least be better planned and prepared.

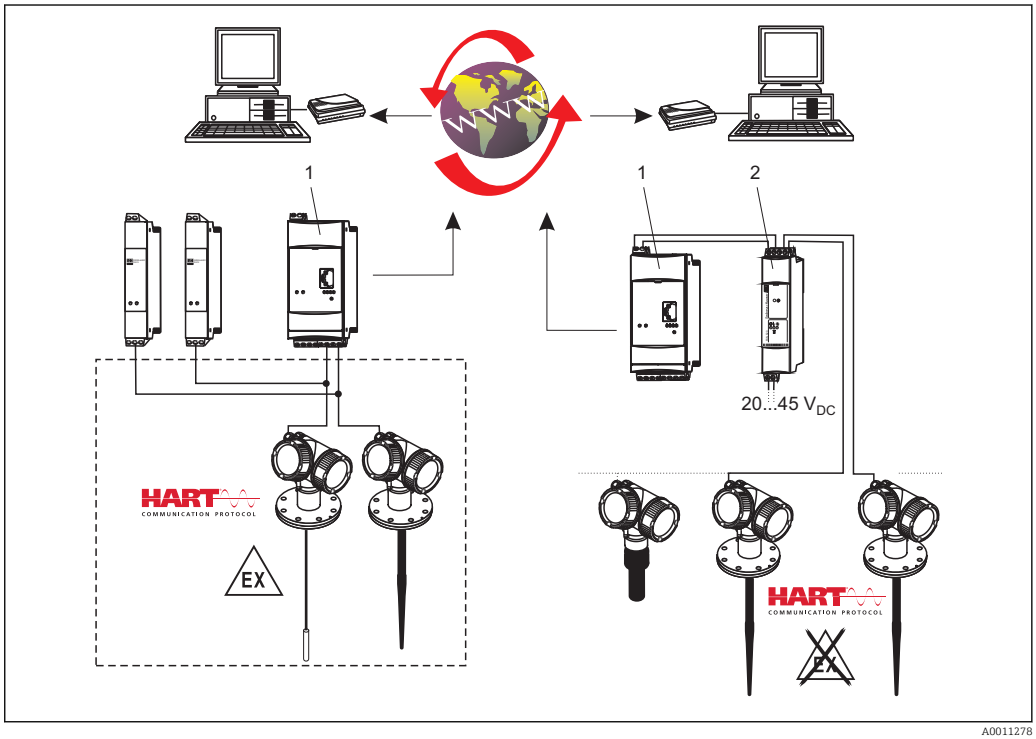

27 The complete measuring system consists of devices and:

1 Fieldgate FXA520
2 Multidrop Connector FXN520

The number of instruments which can be connected in mutidrop mode can be calculated by the "FieldNetCalc" program. A description of this program can be found in Technical Information TI 400F (Multidrop Conncector FXN520). The program is available form your Endress+Hauser sales organisation or in the internet at: www.de.endress.com/Download (text search = "Fieldnetcalc").

Certificates and approvals

CE mark

The measuring system meets the legal requirements of the applicable EC guidelines. These are listed in the corresponding EC Declaration of Conformity together with the standards applied.

Endress+Hauser confirms successful testing of the device by affixing to it the CE mark.

RoHS

The measuring system complies with the substance restrictions of the Restriction on Hazardous Substances Directive 2011/65/EU (RoHS 2).

RCM-Tick marking

The supplied product or measuring system meets the ACMA (Australian Communications and Media Authority) requirements for network integrity, interoperability, performance characteristics as well as health and safety regulations. Here, especially the regulatory arrangements for electromagnetic compatibility are met. The products are labelled with the RCM- Tick marking on the name plate.

A0029561

Ex approval

- ATEX
- IEC Ex
- CSA
- FM
- NEPSI
- KC
- INMETRO
- TIIS [8)]
- EAC Ex

Additional safety instructions must be followed for use in hazardous areas. Please refer to the separate "Safety Instructions" (XA) document included in the delivery. Reference to the applicable XA can be found on the nameplate.

For details on the available certificates and associated XAs: → 📄 79

Dual seal according to ANSI/ISA 12.27.01

The devices have been designed according to ANSI/ISA 12.27.01 as dual seal devices, allowing the user to waive the use and save the cost of installing external secondary process seals in the conduit as required by the process sealing sections of ANSI/NFPA 70 (NEC) and CSA 22.1 (CEC) These instruments comply with the North-American installation practice and provide a very safe and cost-saving installation for pressurized applications with hazardous fluids.

Further information can be found in the Safety Instructions (XA) of the relevant devices.

Functional safety

Use for level monitoring (MIN, MAX, range) up to SIL 3 (homogeneous or diverse redundancy), independently evaluated by TÜV Rheinland in accordance with IEC 61508, refer to the "Functional Safety Manual" for information.

WHG

WHG approval: No. requested

Pressure equipment with allowable pressure ≤ 200 bar (2 900 psi)

Pressure instruments with a flange and threaded boss that do not have a pressurized housing do not fall within the scope of the Pressure Equipment Directive, irrespective of the maximum allowable pressure.

Reasons:

According to Article 2, point 5 of EU Directive 2014/68/EU, pressure accessories are defined as "devices with an operational function and having pressure-bearing housings".

If a pressure instrument does not have a pressure-bearing housing (no identifiable pressure chamber of its own), there is no pressure accessory present within the meaning of the Directive.

8) in preparation

Note:

A partial examination shall be performed for pressure instruments that are part of safety equipment for the protection of a pipe or vessel from exceeding allowable limits (equipment with safety function in accordance with Pressure Equipment Directive 2014/68/EU, Article 2, point 4).

Marine approval

Device	Marine approval [1]			
	LF: ABS marine approval	LG: LR marine approval	LH: BV marine approval	LJ: DNV GL marine approval
FMR67	✔	✔	✔	✔

1) See order code for 590 "Additional approval"

Radio standard EN 302729-1/2

The devices comply with the Level Probing Radar (LPR) radio standard EN 302729-1/2. The devices are approved for unrestricted use inside and outside closed containers in countries of the EU and the EFTA . that have already implemented this standard.

The following countries are those that have currently implemented the directive:

Belgium, Bulgaria, Germany, Denmark, Estonia, France, Greece, UK, Ireland, Iceland, Italy, Liechtenstein, Lithuania, Latvia, Malta, The Netherlands, Norway, Austria, Poland, Portugal, Romania, Sweden, Switzerland, Slovakia, Spain, Czech Republic and Cyprus.

Implementation is still underway in all of the countries not listed.

Please note the following for operation of the devices outside of closed vessels:

1. Installation must be carried out by properly trained, expert staff.
2. The device antenna must be installed in a fixed location pointing vertically downwards.
3. The installation site must be located at a distance of 4 km from the astronomy stations listed below or otherwise approval must be provided by the relevant authority. If the device is installed at a distance of 4 to 40 km from one of the listed stations, it must not be installed at a height of more than 15 m (49 ft) above the ground.

Astronomy stations

Country	Name of the station	Latitude	Longitude
Germany	Effelsberg	50°31'32" North	06°53'00" East
Finland	Metsähovi	60°13'04" North	24°23'37" East
	Tuorla	60°24'56" North	24°26'31" East
France	Plateau de Bure	44°38'01" North	05°54'26" East
	Floirac	44°50'10" North	00°31'37" West
Great Britain	Cambridge	52°09'59" North	00°02'20" East
	Damhall	53°09'22" North	02°32'03" West
	Jodrell Bank	53°14'10" North	02°18'26" West
	Knockin	52°47'24" North	02°59'45" West
	Pickmere	53°17'18" North	02°26'38" West
Italy	Medicina	44°31'14" North	11°38'49" East
	Noto	36°52'34" North	14°59'21" East
	Sardinia	39°29'50" North	09°14'40" East
Poland	Fort Skala Krakow	50°03'18" North	19°49'36" East
Russia	Dmitrov	56°26'00" North	37°27'00" East
	Kalyazin	57°13'22" North	37°54'01" East
	Pushchino	54°49'00" North	37°40'00" East
	Zelenchukskaya	43°49'53" North	41°35'32" East

Country	Name of the station	Latitude	Longitude
Sweden	Onsala	57°23'45" North	11°55'35" East
Switzerland	Bleien	47°20'26" North	08°06'44" East
Spain	Yebes	40°31'27" North	03°05'22" West
	Robledo	40°25'38" North	04°14'57" West
Hungary	Penc	47°47'22" North	19°16'53" East

As a general rule, the requirements outlined in EN 302729-1/2 must be observed.

Radio standard EN 302372-1/2

The devices comply with the Tanks Level Probing Radar (TLPR) radio standard EN 302372-1/2 and are approved for use in closed containers. For installation, points a to f in Annex B of EN 302372-1 must be taken into consideration.

FCC

This device complies with Part 15 of the FCC rules. Operation is subject to the following two conditions: (1) This device may not cause harmful interference, and (2) this device must accept any interference received, including interference that may cause undesired operation.

[Any] changes or modifications not expressly approved by the party responsible for compliance could void the user's authority to operate the equipment.

The devices are compliant with the FCC Code of Federal Regulations, CFR 47, Part 15, Sections 15.205, 15.207, 15.209.

In addition, the devices are compliant with Section 15.256 . For these LPR (Level Probe Radar) applications the devices must be professionally installed in a downward operating position. In addition, the devices are not allowed to be mounted in a zone of 4 km around RAS stations and within a radius of 40 km around RAS stations the maxium operation height of devices is 15 m (49 ft) above ground.

Industry Canada

Canada CNR-Gen Section 7.1.3

This device complies with Industry Canada licence-exempt RSS standard(s). Operation is subject to the following two conditions: (1) This device may not interference, and (2) this device must accept any interference, including interference that may cause undesired operation of the device.

Le présent appareil est conforme aux CNR d'Industrie Canada applicables aux appareils radio exempts de licence. L'exploitation est autorisée aux deux conditions suivantes : (1) l'appareil ne doit pas produire de brouillage, et (2) l'utilisateur de l'appareil doit accepter tout brouillage radioélectrique subi, même si le brouillage est susceptible d'en compromettre le fonctionnement.

[Any] changes or modifications not expressly approved by the party responsible for compliance could void the user's authority to operate the equipment.

- The installation of the LPR/TLPR device shall be done by trained installers, in strict compliance with the manufacturer’s instructions.
- The use of this device is on a “no-interference, no-protection” basis. That is, the user shall accept operations of high-powered radar in the same frequency band which may interfere with or damage this device. However, devices found to interfere with primary licensing operations will be required to be removed at the user’s expense.
- This device shall be installed and operated in a completely enclosed container to prevent RF emissions, which can otherwise interfere with aeronautical navigation.
- The installer/user of this device shall ensure that it is at least 10 km from the Dominion Astrophysical Radio Observatory (DRAO) near Penticton, British Columbia. The coordinates of the DRAO are latitude 49°19′15″ N and longitude 119°37′12″ W. For devices not meeting this 10 km separation (e.g., those in the Okanagan Valley, British Columbia,) the installer/user must coordinate with, and obtain the written concurrence of, the Director of the DRAO before the equipment can be installed or operated. The Director of the DRAO may be contacted at 250-497-2300 (tel.) or 250-497-2355 (fax). (Alternatively, the Manager, Regulatory Standards Industry Canada, may be contacted.)

The model FMR 67 fullfills the requirements for use as LPR (Level Probe Radar).

CRN approval

Some device versions have CRN approval. Devices are CRN approved if the following two conditions are met:

- The device has a CSA approval (product structure: feature 010 "Approval")
- The device has a CRN-approved process connection as per the following table:

Feature 100 in the product structure	Process connection
AGJ	NPS 3" Cl.150 RF, 316/316L
AHJ	NPS 4" Cl.150 RF, 316/316L
RGJ	Thread ANSI MNPT1-1/2, 316L

- Process connections that do not have CRN approval are not listed in this table.
- Please refer to the product structure to discover which process connections are available for a specific device type.
- CRN-approved devices bear the registration number (tbd.) on the nameplate.

An additional pressure restriction applies for the device versions listed in the table below if they are CRN-approved. The pressure range indicated in the "Process" section → 37 continues to apply for device versions not listed in the table below.

Table, in preparation

Test, certificate

Feature 580 "Test, certificate"	Description
JA	3.1 Material certificate, wetted metal parts, EN10204-3.1 inspection certificate
JD	3.1 Material certificate, pressurized parts, EN10204-3.1 inspection certificate
KV	Declaration of Conformity ASME B31.3: The construction, the material used, the pressure and temperature ranges and the labeling of the devices meet the requirements of ASME B31.3

Test reports, declarations and inspection certificates are available in electronic format in the *W@M Device Viewer*:
Enter the serial number from nameplate (www.endress.com/deviceviewer)

This concerns the options for the following order codes:
- 550 "Calibration"
- 580 "Test, certificate"

Hard-copy product documentation

Hard-copy versions of the test reports, declarations and inspection certificates can also be order via order code 570 "Service", option I7 "Hard-copy product documentation". The documents are then supplied with the product.

Other standards and guidelines

- EN 60529
  Degrees of protection provided by enclosures (IP code)
- EN 61010-1
  Safety Requirements for Electrical Equipment for Measurement, Control and Laboratory Use
- IEC/EN 61326
  "Emission in accordance with Class A requirements". Electromagnetic compatibility (EMC requirements).
- NAMUR NE 21
  Electromagnetic compatibility (EMC) of industrial process and laboratory control equipment
- NAMUR NE 43
  Standardization of the signal level for the breakdown information of digital transmitters with analog output signal.
- NAMUR NE 53
  Software of field devices and signal-processing devices with digital electronics
- NAMUR NE 107
  Status classification as per NE107
- NAMUR NE 131
  Requirements for field devices for standard applications.
- IEC61508
  Functional safety of safety-related electric/electronic/programmable electronic systems

Ordering information

Ordering information

Detailed ordering information is available from the following sources:

- In the Product Configurator on the Endress+Hauser website: www.endress.com -> Click "Corporate" -> Select your country -> Click "Products" -> Select the product using the filters and search field -> Open product page -> The "Configure" button to the right of the product image opens the Product Configurator.
- From your Endress+Hauser Sales Center: www.addresses.endress.com

Product Configurator - the tool for individual product configuration

- Up-to-the-minute configuration data
- Depending on the device: Direct input of measuring point-specific information such as measuring range or operating language
- Automatic verification of exclusion criteria
- Automatic creation of the order code and its breakdown in PDF or Excel output format
- Ability to order directly in the Endress+Hauser Online Shop

3-point linearity protocol

The following points must be considered if option F3 (3-point linearity protocol) was selected in feature 550 ("Calibration").

The 3 points of the linearity protocol are defined as follows:

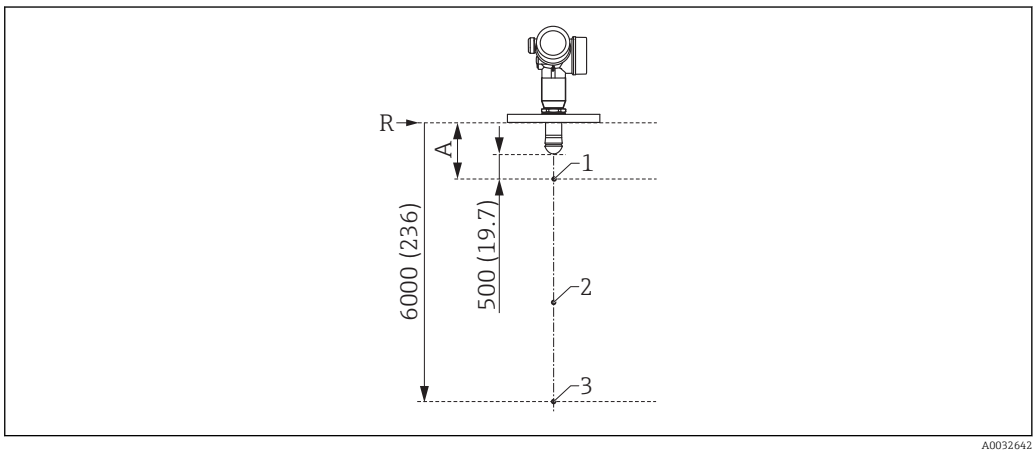

28 *Points of the 3-point linearity protocol; engineering unit: mm (in)*

A Distance from the reference point R to the first measuring point
R Reference point of measurement
1 First measuring point
2 Second measuring point (in the middle between the first and third measuring point)
3 Third measuring point

Measuring point	Position
1st measuring point	▪ At a distance A from the reference point ▪ A = length of antenna + 500 mm (19.7 in) ▪ Minimum distance: A_{min} = 1 000 mm (39.4 in)
2nd measuring point	In the middle between the 1st and 3rd measuring point
3rd measuring point	6 000 mm (236 in) below the reference point R

The position of the measuring points can vary by 1 cm (0.04 in).

The linearity check is performed under reference operating conditions.

5-point linearity protocol

The following points must be considered if option F4 (5-point linearity protocol) was selected in feature 550 ("Calibration").

The 5 points of the linearity protocol are evenly distributed over the measuring range (0% - 100%). **Empty calibration** (E) and **Full calibration** (F) must be specified in order to define the measuring range [9].

The following restrictions must be considered when selecting E and F:

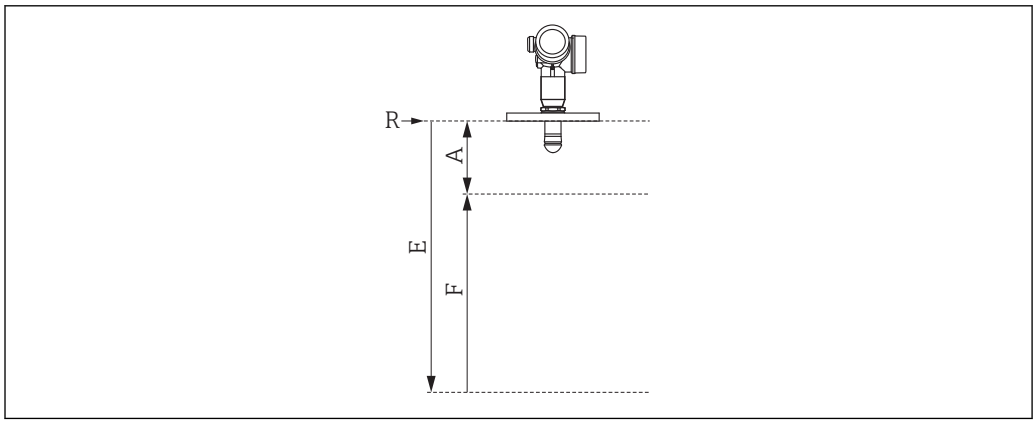

A0032643

Minimum distance between reference point R and 100% mark	Minimum span	Maximum value for "Empty calibration"
A ≥ length of antenna + 600 mm (24 in) [1]	F ≥400 mm (16 in)	E ≤20 m (66 ft)

1) minimum value for FMR67: 861 mm (16 in)

The linearity check is performed under reference operating conditions.

The selected values for **Empty calibration** and **Full calibration** are only used to create the linearity protocol. Afterwards, the values are reset to the default values specific for the antenna. If values other than the default values are required, they must be ordered as a customized parameterization → 67.

9) If (E) and (F) are not specified, antenna-dependent default values will be used instead.

Customer-specific configuration

If the option IJ: "Customized parameterization HART", IK "Customized parameterization PA" or IL "Customized parameterization FF" has been selected in feature 570 "Service", presettings that differ from the default settings can be selected for the following parameters:

Parameters	Communication protocol	Picklist / range of values
Setup → Unit of length	▪ HART ▪ PA ▪ FF	▪ in ▪ ft ▪ mm ▪ m
Setup → Empty calibration	▪ HART ▪ PA ▪ FF	max. 70 m (230 ft)
Setup → Full calibration	▪ HART ▪ PA ▪ FF	max. <70 m (230 ft)
Setup → Extended setup → Curr. output 1 or 2 → Damping	HART	0 to 999.9 s
Setup → Extended setup → Curr. output 1 or 2 → Failure mode	HART	▪ Min ▪ Max ▪ Last valid value
Expert → Comm. → HART config. → Burst mode	HART	▪ Off ▪ On

Services

The following services can be selected via the product structure in the Product Configurator [10]:
- PWIS-free (PWIS = paint-wetting impairment substances)
- Customized parameterization HART → 🗎 67
- Customized parameterization PA → 🗎 67
- Customized parameterization FF → 🗎 67
- W/o tooling DVD (FieldCare)
- Hard-copy product documentation

10) Feature 570 in the product structure

Application Packages

Heartbeat Diagnostics

Availability

Available in all device versions.

Function

- Continuous self-monitoring of the device.
- Diagnostic messages output to
  - the local display.
  - an asset management system (e.g. FieldCare/DeviceCare).
  - an automation system (e.g. PLC).

Advantages

- Device condition information is available immediately and processed in time.
- The status signals are classified in accordance with VDI/VDE 2650 and NAMUR recommendation NE 107 and contain information about the cause of the error and remedial action.

Detailed description

See Operating Instructions of the device (→ 🗎 79); chapter "Diagnostics and trouble shooting"

Heartbeat Verification

Availability

Available for the following options of feature 540 "Application Package":
- EH: Heartbeat Verification + Monitoring
- EJ: Heartbeat Verification

Device functionality checked on demand

- Verification of the correct functioning of the measuring device within specifications.
- The verification result provides information about the condition of the device: **Passed** or **Failed**.
- The results are documented in a verification report.
- The automatically generated report supports the obligation to demonstrate compliance with internal and external regulations, laws and standards.
- Verification is possible without interrupting the process.

Advantages

- No onsite presence is required to use the function.
- The DTM [11] triggers verification in the device and interprets the results. No specific knowledge is required on the part of the user.
- The verification report can be used to prove quality measures to a third party.
- **Heartbeat Verification** can replace other maintenance tasks (e.g. periodic check) or extend the test intervals.

SIL/WHG-locked devices [12]

- The **Heartbeat Verification** module contains a wizard for the proof test which must be performed at appropriate intervals for the following applications:
  - SIL (IEC61508/IEC61511)
  - WHG (German Water Resources Act)
- To perform a proof test, the device must be locked (SIL/WHG locking).
- The wizard can be used via FieldCare, DeviceCare or a DTM-based process control system.

In the case of SIL-locked and WHG-locked devices, it is **not** possible to perform verification without additional measures (e.g. by-passing of the output current) because the output current must be simulated (Increased safety mode) or the level must be approached manually (Expert mode) during subsequent re-locking (SIL/WHG locking).

Detailed description

SD01870F

11) DTM: Device Type Manager; controls device operation via DeviceCare, FieldCare or a DTM-based process control system.
12) Only relevant for devices with SIL or WHG approval: order code 590 ("Additional approval"), option LA ("SIL") or LC ("WHG").

Heartbeat Monitoring

Availability

Available for the following options of feature 540 "Application Package":
EH: Heartbeat Verification + Monitoring

Function

- In addition to the verification parameters, the corresponding parameter values are also logged.
- Existing measured variables, such as the echo amplitude, are used in the **Foam detection** and **Build-up detection** wizards.

The **Foam detection** and **Build-up detection** wizards cannot be used together.

"Foam detection" wizard

- The Heartbeat Monitoring module contains the **Foam detection** wizard.
- This wizard is used to configure automatic foam detection, which detects foam on the product surface on the basis of the reduced signal amplitude. Foam detection can be linked to a switch output in order to control a sprinkler system, for example, which dissolves the foam.
- This wizard can be used via FieldCare, DeviceCare or a DTM-based process control system.

"Build-up detection" wizard

- The Heartbeat Monitoring module contains the **Build-up detection** wizard.
- The wizard is used to configure automatic buildup detection, which detects the buildup of deposits on the antenna on the basis of the increased area of the coupling signal. Buildup detection can be linked to a switch output in order to control a compressed air system, for example, to clean the antenna.
- This wizard can be used via FieldCare, DeviceCare or a DTM-based process control system.

Advantages

- Early detection of changes (trends) to ensure plant availability and product quality.
- Use of information for the proactive planning of measures (e.g. cleaning/maintenance).
- Identification of undesirable process conditions as the basis to optimizing the facility and the processes.
- Automated control of measures to remove foam or buildup.

Detailed description

SD01870F

Accessories

Device-specific accessories **Weather protection cover**

Accessory	Description
Weather protection cover	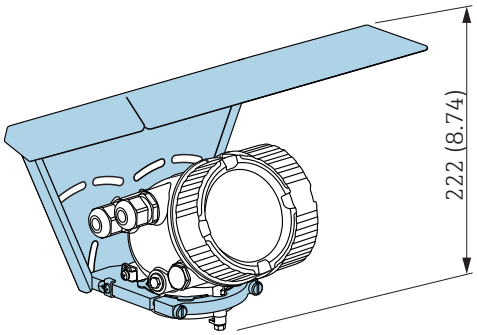 A0015466 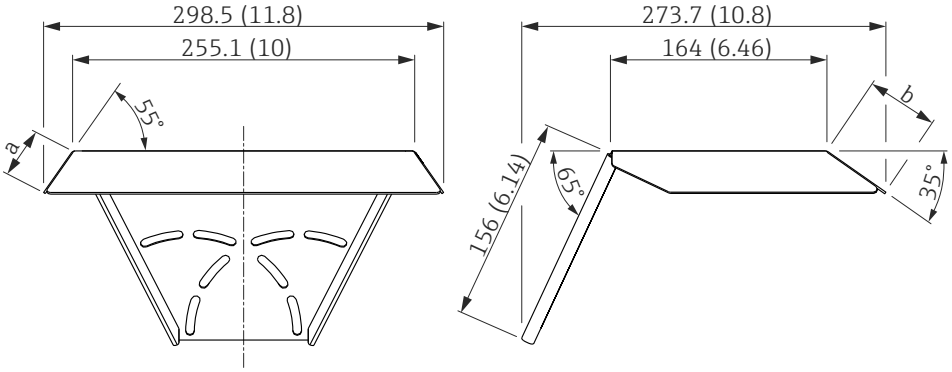 A0015472 *29 Weather protection cover; Dimensions: mm (in)* *a 37,8 mm (1,5 in)* *b 54 mm (2,1 in)* The weather protection cover can be ordered together with the device (product structure, feature 620 "Accessory Enclosed", option PB "Weather Protection Cover"). Alternatively, it can be separately ordered as an accessory; order code 71162242.

Adjustable flange seal

Accessories	Description
Adjustable flange seal	

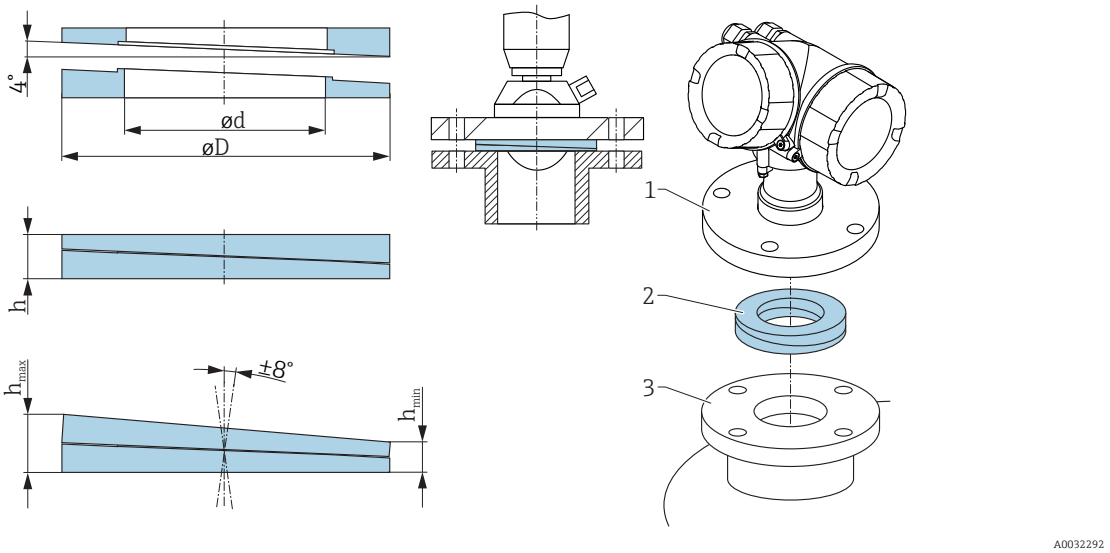

1 UNI slip-on flange
2 Adjustable flange seal
3 Nozzle

The material properties and process conditions of the adjustable flange seal must be compatible with the properties (temperature, pressure, resistance) of the process.

The adjustable flange seal can also be ordered directly with the device (product structure: feature 620 "Accessories enclosed", options PL, PM, PN, PO, PQ, PR).

Technical data: version DN/JIS

Order number	71074263	71074264	71074265
Compatible with	DN80 PN10/40	DN100 PN10/16	▪ DN150 PN10/16 ▪ JIS 10K 150A
Recommended screw length	100 mm (3.9 in)	100 mm (3.9 in)	110 mm (4.3 in)
Recommended screw size	M14	M14	M18
Material	EPDM		
Process pressure	−0.1 to 0.1 bar (−1.45 to 1.45 psi)		
Process temperature	−40 to +80 °C (−40 to +176 °F)		
D	142 mm (5.59 in)	162 mm (6.38 in)	218 mm (8.58 in)
d	89 mm (3.5 in)	115 mm (4.53 in)	169 mm (6.65 in)
h	22 mm (0.87 in)	23.5 mm (0.93 in)	26.5 mm (1.04 in)
h_{min}	14 mm (0.55 in)	14 mm (0.55 in)	14 mm (0.55 in)
h_{max}	30 mm (1.18 in)	33 mm (1.3 in)	39 mm (1.45 in)

Accessories	Description			
	Technical data: version ASME/JIS			
	Order number	71249070	71249072	71249073
	Compatible with	▪ ASME 3" 150lbs ▪ JIS 80A 10K	ASME 4" 150lbs	ASME 6" 150lbs
	Recommended screw length	100 mm (3.9 in)	100 mm (3.9 in)	110 mm (4.3 in)
	Recommended screw size	M14	M14	M18
	Material	EPDM		
	Process pressure	−0.1 to 0.1 bar (−1.45 to 1.45 psi)		
	Process temperature	−40 to +80 °C (−40 to +176 °F)		
	D	133 mm (5.2 in)	171 mm (6.7 in)	219 mm (8.6 in)
	d	89 mm (3.5 in)	115 mm (4.53 in)	168 mm (6.6 in)
	h	22 mm (0.87 in)	23.5 mm (0.93 in)	26.5 mm (1.04 in)
	h_{min}	14 mm (0.55 in)	14 mm (0.55 in)	14 mm (0.55 in)
	h_{max}	30 mm (1.18 in)	33 mm (1.3 in)	39 mm (1.45 in)

Mounting bracket adjustable

Accessories	Description
Mounting bracket adjustable	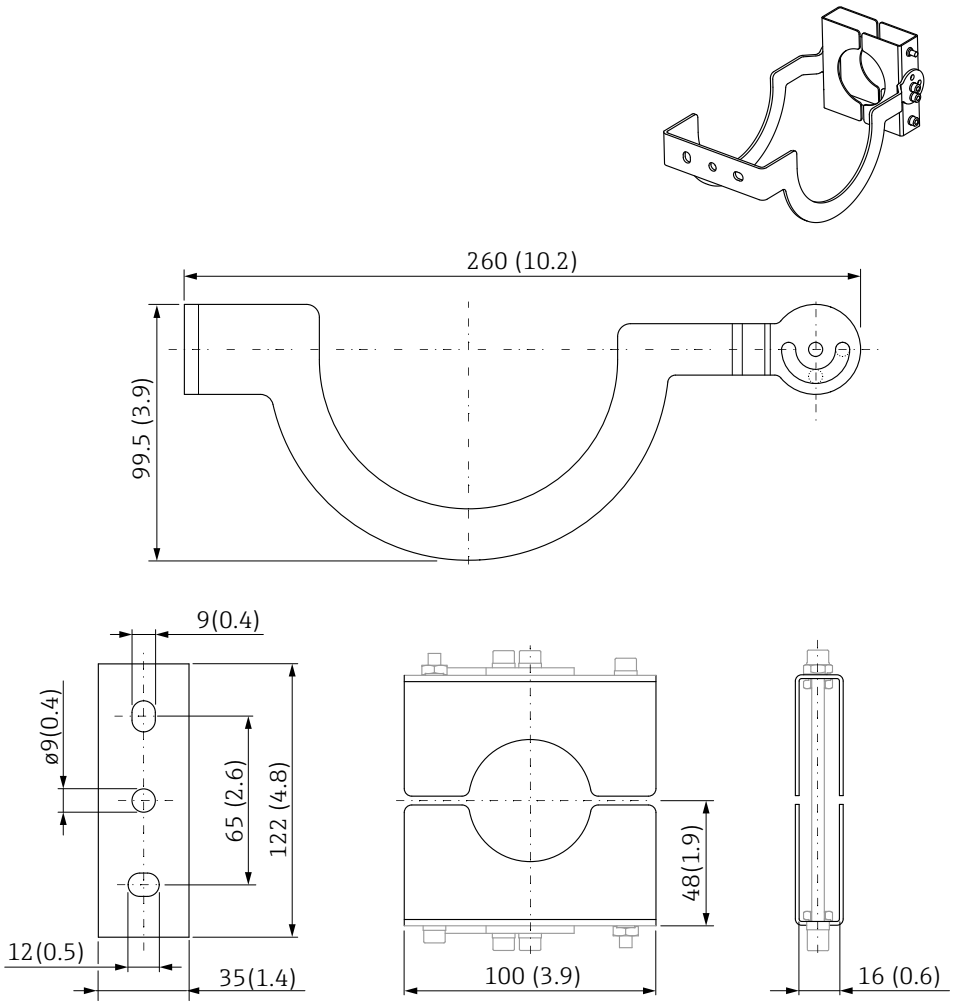 **Material:** 304 (1.4301) **Suitable for housing** [1]: – A: GT19 dual compartment, plastic PBT – C: GT20 dual compartment, Alu, coated **Suitable for antenna** [2]: GA: Drip-off, PTFE DN50 **Suitable for process connection** [3]: – GGJ: thread ISO228 G1-1/2, 316L – RGJ: thread ANSI MNPT1-1/2, 316L **Order number:** 71336522 ▪ There is **no** conductive connection between the mounting bracket and the transmitter housing. ▪ Risk of electrostatic charge. ▪ Integrate the mounting bracket in the local potential equalization system. ▪ Only to be fastened at stable materials (e.g. metal, brick, concrete) using suitable fastening material (to be supplied by customer).

1) Feature 040 in the product structure
2) Feature 070 in the product structure
3) Feature 100 in the product structure

Remote display FHX50

Accessories	Description
Remote display FHX50	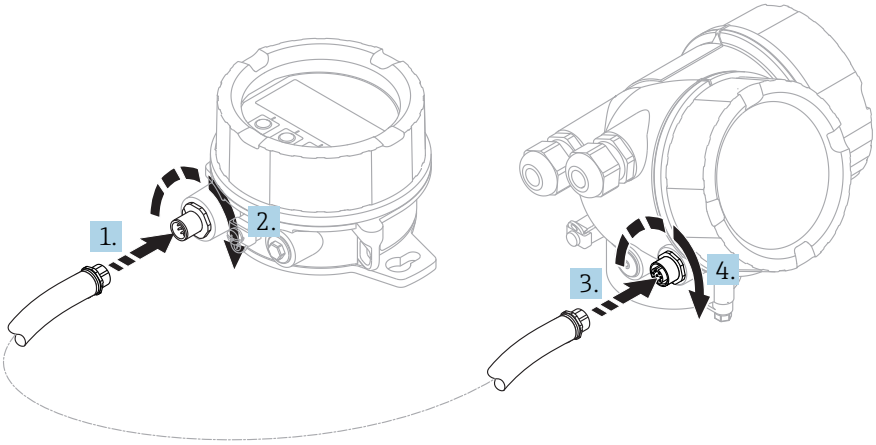 A0019128 ▪ Material: – Plastic PBT – 316L/1.4404 ▪ Degree of protection: IP68 / NEMA 6P and IP66 / NEMA 4x ▪ Suitable for display modules: – SD02 (push buttons) – SD03 (touch control) ▪ Connecting cable: – Cable supplied with device up to 30 m (98 ft) – Standard cable supplied by customer up to 60 m (196 ft) ▪ Ambient temperature range: −40 to 80 °C (−40 to 176 °F) ▪ If the remote display should be used, order the device version "Prepared for display FHX50" (feature 030, version L or M). For the FHX50, you must select option A: "Prepared for display FHX50" under feature 050 "Measuring device version". ▪ If the device version "Prepared for display FHX50" was not originally ordered and a FHX50 display is to be retrofitted, you must select version B "Not prepared for display FHX50" under feature 050: "Measuring device version" when ordering the FHX50. In this case, a retrofit kit for the device is supplied with the FHX50. The kit can be used to prepare the device so that the FHX50 can be used. Use of the FHX50 may be restricted for transmitters with an approval. A device can only be retrofitted with the FHX50 if the option L or M ("Prepared for FHX50") is listed under *Basic specifications*, item 4 "Display, operation" in the Safety Instructions (XA) for the device. Also pay attention to the Safety Instructions (XA) of the FHX50. Retrofitting is not possible on transmitters with: ▪ An approval for use in areas with flammable dust (dust ignition-proof approval) ▪ Ex nA type of protection For details, see document SD01007F.

Overvoltage protection

Accessory	Description
Overvoltage protection for 2-wire-devices OVP10 (1 channel) OVP20 (2 channel)	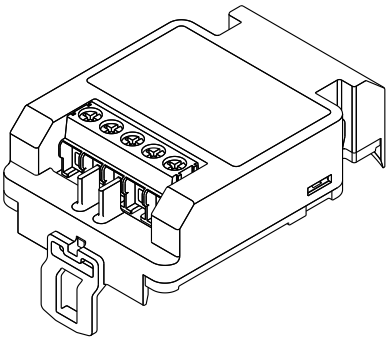 A0021734 **Technical data** ▪ Resistance per channel: 2 * 0.5 Ω_{max} ▪ Threshold DC voltage: 400 to 700 V ▪ Threshold impulse voltage: < 800 V ▪ Capacitance at 1 MHz: < 1.5 pF ▪ Nominal arrest impulse voltage (8/20 µs): 10 kA ▪ Suited for wire cross-sections: 0.2 to 2.5 mm^2 (24 to 14 AWG) **Ordering with device** The overvoltage protection module is preferably ordered with the device. See product structure, feature 610 "Accessory mounted", option NA "Overvoltage protection". Separate ordering of the module is only necessary if a device is to retrofitted with the overvoltage protection. **Order code for retrofitting** ▪ For 1-channel devices (feature 020, option A) OVP10: 71128617 ▪ For 2-channel devices (feature 020, option B, C, E or G) OVP20 : 71128619 **Hosuing lid for retrofitting** In order to keep the necessary safety distances, the housing lid needs to be replaced if the device is retrofitted with the overvoltage protection. Depending on the housing type, the order code of the suitable lid is as follows: ▪ GT18 housing: Lid 71185516 ▪ GT19 housing: Lid 71185518 ▪ GT20 housing: Lid 71185516 **Restrictions for retrofitting** Depending on the approval of the transmitter the usage of the OVP module may be restricted. A device may only be retrofitted with an OVP module if the option *NA* (overvoltage protection) is quoted unter *Optional Specifications* in the Safety Instructions (XA) pertaining to the device. For details refer to SD01090F.

Communication-specific accessories

Accessory	Description
Commubox FXA195 HART	For intrinsically safe HART communication with FieldCare via the USB interface. For details refer to Technical Information TI00404F

Accessory	Description
Commubox FXA291	Connects Endress+Hauser field devices with CDI interface (= Endress+Hauser Common Data Interface) to the USB interface of a computer. Order code: 51516983 For details refer to Technical Information TI00405C

Accessory	Description
HART Loop Converter HMX50	Evaluates the dynamic HART variables and converts them to analog current signals or limit values. Order code: 71063562 For details refer to Technical Information TI00429F and Operating Instructions BA00371F

Accessory	Description
WirelessHART Adapter SWA70	Connects field devices to a WirelessHART network. The WirelessHART adapter can be mounted directly at a HART device and is easly integrated into an existing HART network. It ensures safe data transmission and can be operated in parallel with other wireless networks. For details refer to Operating Instructions BA00061S

Accessory	Description
Fieldgate FXA320	Gateway for remote monitoring of connected 4-20mA measuring devices via web browser. For details refer to Technical Information TI00025S and Operating Instructions BA00053S

Accessory	Description
Fieldgate FXA520	Gateway for remote diagnosis and parametrization of connected HART measuring devices via web browser. For details refer to Technical Information TI00025S and Operating Instructions BA00051S

Zubehör	Beschreibung
Fieldgate FXA42	Programmable Ethernet, 2G/3G and WLAN gateway for data transmission between digital and analog measuring devices and inventory management software For details refer to Technical Information TI01297S and Brief Operating Instructions KA01246S

Accessory	Description
Field Xpert SFX350	Field Xpert SFX350 is a mobile computer for commissioning and maintenance. It enables efficient device configuration and diagnostics for HART and FOUNDATION fieldbus devices in the **non-Ex area**. For details, see Operating Instructions BA01202S

Accessory	Description
Field Xpert SFX370	Field Xpert SFX370 is a mobile computer for commissioning and maintenance. It enables efficient device configuration and diagnostics for HART and FOUNDATION fieldbus devices in the **non-Ex area** and the **Ex area**. For details, see Operating Instructions BA01202S

Service-specific accessories

Accessory	Description
FieldCare / DeviceCare	Endress+Hauser's FDT-based Plant Asset Management tool. Helps to configure and maintain all field devices of your plant. By supplying status information it also supports the diagnosis of the devices. For details refer to Operating Instructions BA00027S and BA00059S.

System components

Accessory	Description
Graphic Data Manager Memograph M	The graphic data manager Memograph M provides information on all the relevant process variables. Measured values are recorded correctly, limit values are monitored and measuring points analyzed. The data are stored in the 256 MB internal memory and also on an SD card or USB stick. For details refer to Technical Information TI00133R and Operating Instructions BA00247R
RN221N	Active barrier with power supply for safe separation of 4 to 20 mA current circuits. Provides bi-directional HART transmission. For details refer to Technical Information TI00073R and Operating Instructions BA00202R
RNS221	Transmitter supply for 2-wire sensors or transmitters exclusively for non-Ex areas. Provides bi-directional communication using the HART communication sockets. For details refer to Technical Information TI00081R and Operating Instructions KA00110R

Supplementary documentation

For an overview of the scope of the associated Technical Documentation, refer to the following:
- The *W@M Device Viewer*: enter the serial number from the nameplate (www.endress.com/deviceviewer)
- The *Endress+Hauser Operations App*: Enter the serial number from the nameplate or scan the 2-D matrix code (QR code) on the nameplate.

The following document types are available:
In the Download Area of the Endress+Hauser Internet site: www.endress.com → Downloads

Standard documentation

Micropilot FMR67

Correlation of documentations to the device:

Device	Power supply, output	Communication	Document type	Document code
FMR67	A, B, C, K, L	HART	Operating Instructions	BA01620F
			Brief Operating Instructions	KA01253F
			Description of Device Parameters	GP01101F
	G	PROFIBUS PA	Operating Instructions	* [1]
			Brief Operating Instructions	*
			Description of device parameters	*
	E	FOUNDATION Fieldbus	Operating Instructions	*
			Brief Operating Instructions	*
			Description of device parameters	*

1) In preparation

Safety Instructions (XA)

Depending on the approval, the following Safety Instructions (XA) are supplied with the device. They are an integral part of the Operating Instructions.

Feature 010	Approval	Feature 020 "Power Supply; Output"				
		A [1]	B [2]	C [3]	E [4]/G [5]	K [6]/L [7]
BA	ATEX II 1G Ex ia IIC T6 Ga	XA01549F	XA01549F	XA01549F	XA01557F	-
BB	ATEX II 1/2G Ex ia IIC T6 Ga/Gb	XA01549F	XA01549F	XA01549F	XA01557F	-
BC	ATEX II 1/2G Ex ia/db [ia Ga] IIC T6 Ga/Gb	XA01552F	XA01552F	XA01552F	XA01560F	XA01552F
BD	ATEX II 1/2/3G Ex ia/ic [ia Ga] IIC T6 Ga/Gb/Gc	XA01550F	XA01550F	XA01550F	XA01558F	-
BE	ATEX II 1D Ex ta IIIC Da	* [8]	* [8]	* [8]	XA01562F	* [8]
BF	ATEX II 1/2D Ex ta/tb IIIC T85°C Da/Db	XA01554F	XA01554F	XA01554F	XA01562F	XA01554F
BG	ATEX II 3G Ex ec IIC T6 Gc	XA01551F	XA01551F	XA01551F	XA01559F	-
BH	ATEX II 3G Ex ic IIC T6 Gc	XA01551F	XA01551F	XA01551F	XA01559F	-
BL	ATEX II 1/2/3G Ex ia/ec [ia Ga] IIC T6 Ga/Gb/Gc	XA01550F	XA01550F	XA01550F	XA01558F	XA01550F
B2	ATEX II 1/2G Ex ia IIC T6 Ga/Gb, 1/2D Ex ia IIIC T85°C Da/Db	XA01555F	XA01555F	XA01555F	XA01563F	-
B3	ATEX II 1/2G Ex ia/db [ia Ga] IIC T6, Ga/Gb 1/2D Ex ta/tb IIIC T85°C Da/Db	XA01556F	XA01556F	XA01556F	XA01564F	XA01556F
CB	CSA C/US IS Cl.I Div.1 Gr.A-D	* [8]	* [8]	* [8]	* [8]	-
CD	CSA C/US DIP Cl.II,III Div.1 Gr.E-G	* [8]	* [8]	* [8]	* [8]	* [8]
C2	CSA C/US IS Cl.I,II,III Div.1 Gr.A-G, NI Cl.1 Div.2, Ex ia	* [8]	* [8]	* [8]	* [8]	-
C3	CSA C/US XP Cl.I,II,III Div.1 Gr.A-G, NI Cl.1 Div.2, Ex db	* [8]	* [8]	* [8]	* [8]	* [8]

Feature 010	Approval	Feature 020 "Power Supply; Output"				
		A [1]	B [2]	C [3]	E [4]/G [5]	K [6]/L [7]
FA	FM IS Cl.I Div.1 Gr.A-D	* [8]	* [8]	* [8]	* [8]	-
FB	FM IS Cl.I,II,III Div.1 Gr.A-G, AEx ia, NI Cl.1 Div.2	* [8]	* [8]	* [8]	* [8]	-
FC	FM XP Cl.I Div.1 Gr.A-D	* [8]	* [8]	* [8]	* [8]	* [8]
FD	FM XP Cl.I,II,III Div.1 Gr.A-G, AEx db, NI Cl.1 Div.2	* [8]	* [8]	* [8]	* [8]	* [8]
FE	FM DIP Cl.II,III Div.1 Gr.E-G	* [8]	* [8]	* [8]	* [8]	* [8]
GA	EAC Ex ia IIC T6 Ga	* [8]	* [8]	* [8]	* [8]	-
GB	EAC Ex ia IIC T6 Ga/Gb	* [8]	* [8]	* [8]	* [8]	-
GC	EAC Ex ia/db [ia Ga] IIC T6 Ga/Gb	* [8]	* [8]	* [8]	* [8]	* [8]
GE	EAC Ex ta IIIC Da	* [8]	* [8]	* [8]	* [8]	* [8]
GF	EAC Ex ta/tb IIIC T85°oC Da/Db	* [8]	* [8]	* [8]	* [8]	* [8]
GR	Non-hazardous area + EAC marking	* [8]	* [8]	* [8]	* [8]	* [8]
IA	IEC Ex ia IIC T6 Ga	XA01549F	XA01549F	XA01549F	XA01557F	-
IB	IEC Ex ia IIC T6 Ga/Gb	XA01549F	XA01549F	XA01549F	XA01557F	-
IC	IEC Ex ia/db [ia Ga] IIC T6 Ga/Gb	XA01552F	XA01552F	XA01552F	XA01560F	XA01552F
ID	IEC Ex ia/ic [ia Ga] IIC T6 Ga/Gb/Gc	XA01550F	XA01550F	XA01550F	XA01558F	-
IE	IEC Ex ta IIIC Da	* [8]	* [8]	* [8]	XA01562F	* [8]
IF	IEC Ex ta/tb IIIC T85°oC Da/Db	XA01554F	XA01554F	XA01554F	XA01562F	XA01554F
IG	IEC Ex ec IIC T6 Gc	XA01551F	XA01551F	XA01551F	XA01559F	XA01551F
IH	IEC Ex ic IIC T6 Gc	XA01551F	XA01551F	XA01551F	XA01559F	-
IL	IEC Ex ia/ec [ia Ga] IIC T6 Ga/Gb/Gc	XA01550F	XA01550F	XA01550F	XA01558F	-
I2	IEC Ex ia IIC T6 Ga/Gb, Ex ia IIIC T85°C Da/Db	XA01555F	XA01555F	XA01555F	XA01563F	-
I3	IEC Ex ia/db [ia Ga] IIC T6 Ga/Gb, Ex ta/tb IIIC T85°C Da/Db	XA01556F	XA01556F	XA01556F	XA01564F	XA01556F
KA	KC Ex ia IIC T6 Ga	* [8]	* [8]	* [8]	* [8]	-
KB	KC Ex ia IIC T6 Ga/Gb	* [8]	* [8]	* [8]	* [8]	-
KC	KC Ex ia/db [ia Ga] IIC T6 Ga/Gb	* [8]	* [8]	* [8]	* [8]	* [8]
MA	INMETRO Ex ia IIC T6 Ga	* [8]	* [8]	* [8]	* [8]	-
ME	INMETRO Ex ta IIIC Da	* [8]	* [8]	* [8]	* [8]	* [8]
MH	INMETRO Ex ic IIC T6 Gc	* [8]	* [8]	* [8]	* [8]	-
NA	NEPSI Ex ia IIC T6 Ga	* [8]	* [8]	* [8]	* [8]	-
NB	NEPSI Ex ia IIC T6 Ga/Gb	* [8]	* [8]	* [8]	* [8]	-
NC	NEPSI Ex ia/db [ia Ga] IIC T6 Ga/Gb	* [8]	* [8]	* [8]	* [8]	* [8]
NF	NEPSI DIP A20/21 T85...90°oC IP66	* [8]	* [8]	* [8]	* [8]	* [8]
NG	NEPSI Ex ec IIC T6 Gc	* [8]	* [8]	* [8]	* [8]	* [8]
NH	NEPSI Ex ic IIC T6 Gc	* [8]	* [8]	* [8]	* [8]	-
N2	NEPSI Ex ia IIC T6 Ga/Gb, Ex iaD 20/21 T85...90°C	* [8]	* [8]	* [8]	* [8]	-

Feature 010	Approval	Feature 020 "Power Supply; Output"				
		A [1]	B [2]	C [3]	E [4]/G [5]	K [6]/L [7]
N3	NEPSI Ex d[ia] IIC T6 Ga/Gb, DIP A20/21 T85...90oC IP66	* [8]	* [8]	* [8]	* [8]	* [8]
8A	FM/CSA IS+XP Cl.I,II,III Div.1 Gr.A-G	* [8]	* [8]	* [8]	* [8]	-

1) 2-wire; 4-20mA HART
2) 2-wire; 4-20mA HART, switch output
3) 2-wire; 4-20mA HART, 4-20mA
4) 2-wire; FOUNDATION Fieldbus, switch output
5) 2-wire; PROFIBUS PA, switch output
6) 4-wire 90-253VAC; 4-20mA HART
7) 4-wire 10.4-48VDC; 4-20mA HART
8) in preparation

The nameplate indicates the Safety Instructions (XA) that are relevant to the device.

If the device is prepared for the remote display FHX50 (product structure: feature 030: Display, Operation", option L or M), the Ex marking of some certificates changes according to the following table [13]:

Feature 010 ("Approval")	Feature 030 ("Display, Operation")	Ex marking
B3	L [1]	II 1/2 G Ex db [ia] IIC T6 Ga/Gb, II 1/2 D Ex ta [ia Db] IIIC Txx°C Da/Db
I3	L [2]	Ex db [ia] IIC T6 Ga/Gb, Ex ta [ia Db] IIIC Txx°C Da/Db

1) 4-wire 10.4-48VDC; 4-20mA HART
2) 4-wire 10.4-48VDC; 4-20mA HART

13) The marking of certificates not mentioned in this table are not affected by the FHX50.

www.addresses.endress.com

Endress+Hauser

People for Process Automation