BA02162F/00/EN/02.23-00
71619546
2023-06-30

Operating Instructions
Fermentation Monitor QWX43

Continuous measurement of density, viscosity, temperature and concentration for liquids

Endress+Hauser
People for Process Automation

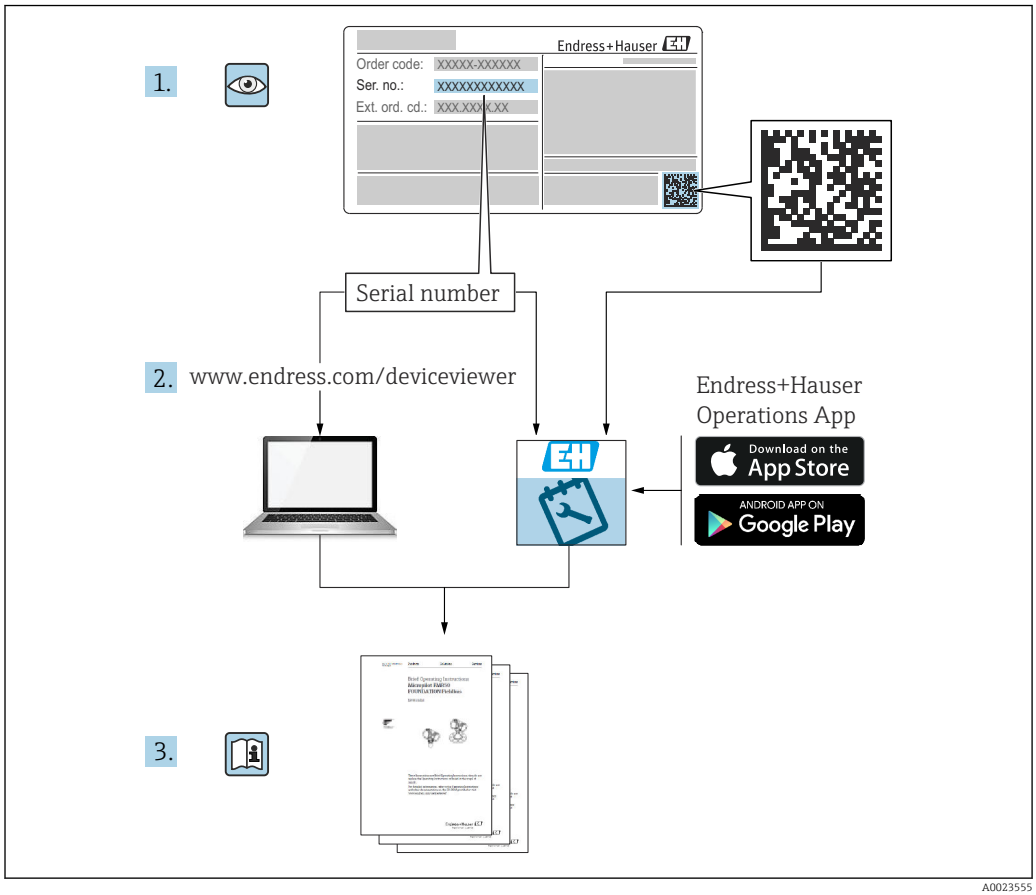

A0023555

- Make sure the document is stored in a safe place such that it is always available when working on or with the device.
- To avoid danger to individuals or the facility, read the "Basic safety instructions" section carefully, as well as all other safety instructions in the document that are specific to working procedures.
- The manufacturer reserves the right to modify technical data without prior notice. Your Endress+Hauser distributor will supply you with current information and updates to these Operating Instructions.

Table of contents

1 Document information 5
1.1 Document function 5
1.2 Symbols 5
1.2.1 Safety symbols 5
1.2.2 Electrical symbols 5
1.2.3 Symbols for certain types of information 5
1.2.4 Symbols in graphics 6
1.3 List of abbreviations 6
1.4 Documentation 6
1.4.1 Supplementary device-dependent documentation 6
1.5 Registered trademarks 6

2 Basic safety instructions 8
2.1 Requirements for the personnel 8
2.2 Intended use 8
2.2.1 Incorrect use 8
2.3 Safety instructions 8
2.4 Workplace safety 9
2.5 Operational safety 9
2.6 Product safety 9
2.7 IT security 9

3 Product description 10
3.1 Measuring principle 10
3.1.1 Netilion server platform version 10
3.1.2 Direct integration version 10
3.2 System configuration: Netilion server platform version 10
3.3 System configuration: Direct integration version 11
3.4 Product design 12

4 Incoming acceptance and product identification 13
4.1 Incoming acceptance 13
4.2 Product identification 13
4.2.1 Nameplate 13
4.3 Manufacturer address 13
4.4 Storage and transport 14
4.4.1 Storage temperature 14
4.4.2 Transporting the device 14

5 Installation 15
5.1 Mounting requirements 15
5.2 Installation instructions 16
5.2.1 Take clearance into consideration . . . 16
5.2.2 M12 plug 16
5.2.3 Positioning the antenna 16
5.2.4 Wireless access point for direct integration version 17
5.3 Mounting the measuring device 17
5.4 Post-mounting check 18

6 Electrical connection 19
6.1 Supply voltage 19
6.2 Power consumption 19
6.3 Current consumption 19
6.4 Connecting the measuring device 19
6.5 Overvoltage protection 20
6.6 Post-connection check 20

7 Operation options 21
7.1 Netilion server platform 21
7.2 Direct integration 21
7.3 LEDs on the device 21

8 Commissioning the Netilion Server platform version 22
8.1 Commissioning requirements 22
8.2 Creating a Netilion account 22
8.3 Creating and configuring an asset for Fermentation Monitor 22
8.4 Configuring the WLAN for the Fermentation Monitor 22
8.4.1 Notes on the firewall configuration . . 23
8.4.2 Descriptions of signal strength quality 24
8.5 Creating a tank (system) 24
8.6 Creating a recipe (beer type) 25
8.7 Creating a batch 25

9 Commissioning the direct integration version 27
9.1 Planning network integration 27
9.1.1 Configuring and mounting the wireless access point 27
9.1.2 Planning, configuring and documenting IP addresses 28
9.1.3 Enabling port for communication 28
9.1.4 Configuring the network routing during network segmentation (VLANs) 28
9.2 Configuring the WLAN for the Fermentation Monitor 28
9.2.1 Notes on the firewall configuration . . 29
9.2.2 Descriptions of signal strength quality 29
9.3 Setting up the Fermentation Monitor function for the control system 30
9.3.1 Introduction and overview of QWX43 function module 30
9.3.2 Prerequisites for integration 31

9.3.3 Setting up the function block for the control system . . . 31
9.4 Description of Fermentation Monitorfunction block . . . 32
9.4.1 Input parameters . . . 32
9.4.2 Output parameters . . . 32
9.4.3 sensorDataparameter block . . . 33
9.5 Function check . . . 35

10 Operation (Netilion Value) . . . 36

10.1 Description of Netilion Value for the Fermentation Monitor . . . 36
10.1.1 "Dashboard" view . . . 36
10.1.2 "All Objects" view . . . 37
10.1.3 "Asset Details" view . . . 38
10.1.4 "Batch History" view . . . 39
10.1.5 "Batch Details" view . . . 40
10.2 Exporting data . . . 41
10.3 Automatic Batch Start/Stop Recognition . . . 42
10.4 Configuring alerts for process events . . . 42
10.5 Alcohol content – Response at low temperatures . . . 42

11 Diagnostics and troubleshooting . . . 44

11.1 General troubleshooting . . . 44
11.2 Diagnostic information via LEDs . . . 44
11.3 Diagnostic information in hotspot mode . . . 46
11.4 Restoring hotspot mode . . . 46
11.4.1 Netilion server platform version . . . 46
11.4.2 Direct integration version . . . 46
11.5 Restarting the device . . . 46
11.6 Firmware history . . . 47
11.7 Fermentation Monitor limiting behavior . . . 47

12 Maintenance . . . 48

12.1 Maintenance tasks . . . 48
12.2 Updating the firmware . . . 48

13 Repair . . . 50

13.1 General information . . . 50
13.1.1 Repair concept . . . 50
13.2 Return . . . 50
13.3 Disposal . . . 50

14 Technical data . . . 51

14.1 Input . . . 51
14.1.1 Measured variable . . . 51
14.1.2 Measuring range . . . 52
14.2 Output . . . 54
14.2.1 Output signal . . . 54
14.2.2 Signal on alarm . . . 54
14.2.3 Protocol-specific data . . . 54
14.3 Environment . . . 55
14.3.1 Ambient temperature range . . . 55
14.3.2 Storage temperature . . . 55
14.3.3 Operating height . . . 55
14.3.4 Humidity . . . 55
14.3.5 Climate class . . . 55
14.3.6 Degree of protection . . . 55
14.3.7 Shock and vibration resistant . . . 55
14.3.8 Mechanical stress . . . 55
14.3.9 Internal cleaning . . . 55
14.3.10 Electromagnetic compatibility (EMC) . . . 56
14.4 Process . . . 57
14.4.1 Process temperature range . . . 57
14.4.2 Process pressure range . . . 57

Index . . . 58

1 Document information

1.1 Document function

These Operating Instructions contain all the information that is required in various phases of the life cycle of the device: from product identification, incoming acceptance and storage, to mounting, connection, operation and commissioning through to troubleshooting, maintenance and disposal.

1.2 Symbols

1.2.1 Safety symbols

DANGER

This symbol alerts you to a dangerous situation. Failure to avoid this situation will result in serious or fatal injury.

WARNING

This symbol alerts you to a dangerous situation. Failure to avoid this situation can result in serious or fatal injury.

CAUTION

This symbol alerts you to a dangerous situation. Failure to avoid this situation can result in minor or medium injury.

NOTICE

This symbol contains information on procedures and other facts which do not result in personal injury.

1.2.2 Electrical symbols

⎓
Direct current

∼
Alternating current

≂
Direct and alternating current

⏚ Ground connection
Grounded clamp, which is grounded via a grounding system.

⏚ Protective earth (PE)
Ground terminals, which must be grounded prior to establishing any other connections. The ground terminals are located on the inside and outside of the device.

1.2.3 Symbols for certain types of information

✓ **Permitted**
Procedures, processes or actions that are permitted

✓✓ **Preferred**
Procedures, processes or actions that are preferred

✗ **Forbidden**
Procedures, processes or actions that are forbidden

ℹ **Tip**
Indicates additional information

Reference to documentation

Reference to page

Reference to graphic

Visual inspection

1.2.4 Symbols in graphics

1, 2, 3, ...
Item numbers

1., 2., 3.
Series of steps

A, B, C, ...
Views

A-A, B-B, C-C etc.
Sections

Hazardous area
Indicates the hazardous area

Safe area (non-hazardous area)
Indicates the non-hazardous area

1.3 List of abbreviations

Abbreviation	Meaning
IT	Information technology, e.g. company network for information processing and internet connection
OT	Operational technology, e.g. network for process automation
OUC	Open User Communication: Open User Communication is a method for data transmission via Ethernet (TCP/IP) in Siemens SIMATIC systems.

1.4 Documentation

All available documents can be downloaded using:
- the serial number of the device (see cover page for description) or
- the data matrix code of the device (see cover page for description) or
- "Download" area of web page www.endress.com

1.4.1 Supplementary device-dependent documentation

Additional documents are supplied depending on the device version ordered: Always comply strictly with the instructions in the supplementary documentation. The supplementary documentation is an integral part of the device documentation.

1.5 Registered trademarks

TRI-CLAMP®
Registered trademark of Ladish & Co., Inc., Kenosha, USA

VARIVENT® N
Registered trademark of GEA Group Aktiengesellschaft, Düsseldorf, Germany

2 Basic safety instructions

2.1 Requirements for the personnel

The personnel for installation, commissioning, diagnostics and maintenance must fulfill the following requirements:

- Trained, qualified specialists must have a relevant qualification for this specific function and task
- Are authorized by the plant owner/operator
- Are familiar with federal/national regulations
- Before beginning work, the specialist staff must have read and understood the instructions in the Operating Instructions and supplementary documentation as well as in the certificates (depending on the application)
- Follow instructions and comply with conditions

The operating personnel must fulfill the following requirements:

- Being instructed and authorized according to the requirements of the task by the facility's owner-operator
- Following the instructions in these Operating Instructions

2.2 Intended use

The Fermentation Monitor QWX43 is a measuring device for monitoring temperature, density, viscosity and sound velocity. It is specifically intended for monitoring the concentration of sugar, alcohol and the brewing process during the fermentation of beer, for example.

- Only use the device for liquids
- Improper use can pose hazards
- The plant owner/operator must ensure that the device remains in proper operating condition for its service life
- Use the device only for media to which the process-wetted materials have an adequate level of resistance
- Do not exceed or fall below the limit values for the device
- Do not use the device in the hazardous area

2.2.1 Incorrect use

The manufacturer is not liable for damage caused by improper or non-designated use.

Using the Fermentation Monitor in a manner not specified by the manufacturer can compromise the protection offered by the Fermentation Monitor.

2.3 Safety instructions

⚠ WARNING

Incorrect commissioning leads to distorted measurement results or risk of injury due to incorrect installation!

- The device may only be commissioned by authorized and qualified personnel.
- If you do not understand the graphical instructions enclosed, then download the Operating Instructions.

⚠ WARNING

Danger of burns due to heated surfaces!

- Process-specific temperatures of up to 80 °C (176 °F) can occur at the process connection when the device is in operation. Use suitable gloves or allow the device to cool down.

WARNING

Risk of electric shock if voltage is present!

- If the device is connected to voltage, do not open the device cover and do not touch electrical contacts.

A secure WLAN is recommended on the customer's side for connection to the Internet.

2.4 Workplace safety

When working on and with the device:

- Wear the required protective equipment according to federal/national regulations.

2.5 Operational safety

Risk of injury!

- Operate the device only if it is in proper technical condition, free from errors and faults.
- The operator is responsible for ensuring interference-free operation of the device.

Modifications to the device

Unauthorized modifications to the device are not permitted and can lead to unforeseeable dangers.

- If, despite this, modifications are required, consult with Endress+Hauser.

Repair

To ensure continued operational safety and reliability:

- Only perform repair work on the device if this is expressly permitted.
- Observe federal/national regulations pertaining to the repair of an electrical device.
- Use original spare parts and accessories from Endress+Hauser only.

2.6 Product safety

This measuring device is designed in accordance with good engineering practice to meet state-of-the-art safety requirements, has been tested, and left the factory in a condition in which it is safe to operate.

The measuring device meets general safety standards and legal requirements. Furthermore, it complies with the EC directives which are listed in the device-specific EC Declaration of Conformity. Endress+Hauser confirms this by affixing the CE mark to the device.

2.7 IT security

We only provide a warranty if the device is installed and used as described in the Operating Instructions. The device is equipped with security mechanisms to protect it against any inadvertent changes to the device settings.

IT security measures in line with operators' security standards and designed to provide additional protection for the device and device data transfer must be implemented by the operators themselves.

3 Product description

3.1 Measuring principle

The Fermentation Monitor QWX43 is a measuring device for monitoring temperature, density, viscosity and sound velocity. It is specifically intended for monitoring the concentration of sugar, alcohol and the brewing process during the fermentation of beer, for example.

The measurement method is based on a combination of the vibronic principle with an integrated temperature measurement and a sound velocity measurement using ultrasound. The compact device is installed directly in the tank and is powered by a separate supply voltage. The IP66/67 protected housing contains a web server via which the sensor measured values are sent, depending on the version, either to the Netilion Server platform or to a wireless access point.

The Fermentation Monitor QWX43 is available in the "Netilion server platform" and "Direct integration" versions.

3.1.1 Netilion server platform version

The web server integrated in the housing sends the sensor measured values directly to the Endress+Hauser Netilion Server platform. The values can be called up and saved via Netilion Value.

3.1.2 Direct integration version

The Web server integrated in the housing sends the sensor measured values to a wireless access point outside the Internet. From this point, the sensor measured values are transmitted by a wired connection via TCP/IP to the customer's automation system.

3.2 System configuration: Netilion server platform version

The Fermentation Monitor QWX43 can be put into operation with the following digital application:
Netilion Value: https://Netilion.endress.com/app/value

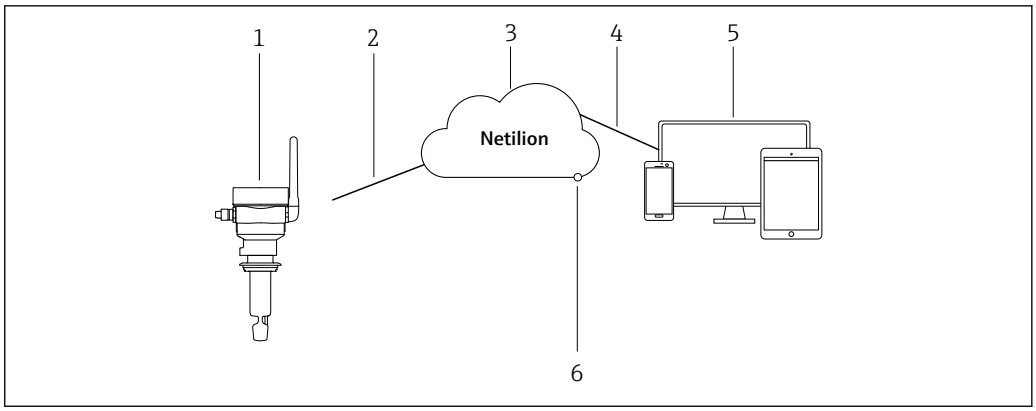

1 *System design Fermentation Monitor QWX43*

1 *Fermentation Monitor QWX43*
2 *WLAN https Internet connection*
3 *Netilion server platform*
4 *https Internet connection*
5 *Netilion Services: browser-based Netilion Service app*
6 *Netilion Connect: Application Programming Interface (API)*

Detailed information on Netilion server platform: https://netilion.endress.com

3.3 System configuration: Direct integration version

The QWX43 can be Fermentation Monitor connected to the web server and commissioned via a function block in the control system.

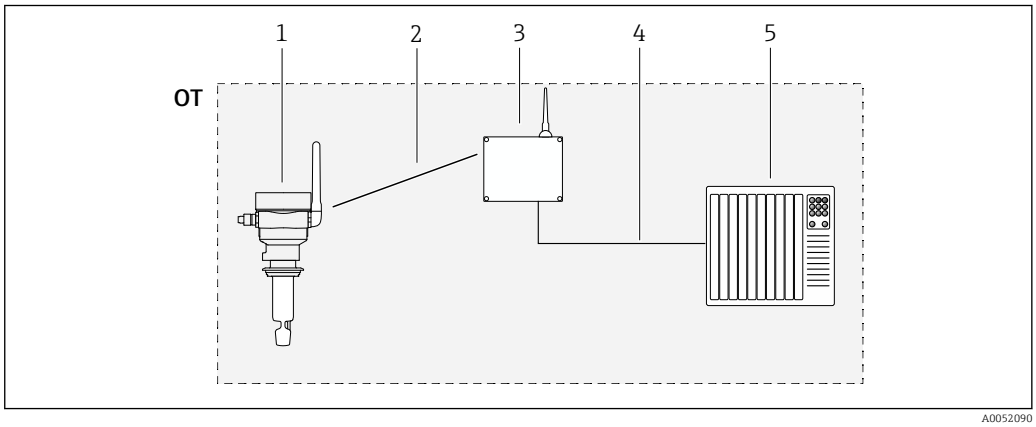

2 *System configuration Fermentation Monitor QWX43 – Direct integration*

OT *Operational Technology, in this context, fieldbus network outside the Internet*
1 *Fermentation Monitor QWX43*
2 *WLAN connection (wireless connection)*
3 *Wireless access point*
4 *Wired connection: control system (TCP/IP)*
5 *Automation system*

3.4 Product design

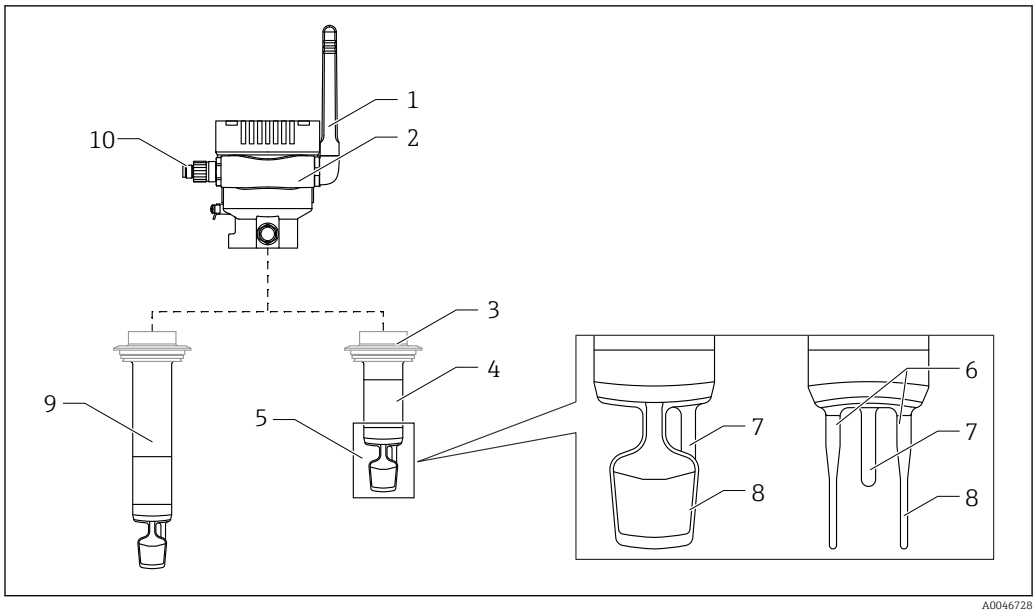

3 Product design

1 Antenna
2 Single-chamber housing with nameplate
3 Process connection
4 Probe design: Compact version, standard length: 142 mm (5.59 inch)
5 Measuring elements
6 Ultrasonic sensor
7 Temperature sensor
8 Tuning fork (vibronic)
9 Probe design: Pipe extension
10 M12 plug to connect the supply voltage

4 Incoming acceptance and product identification

4.1 Incoming acceptance

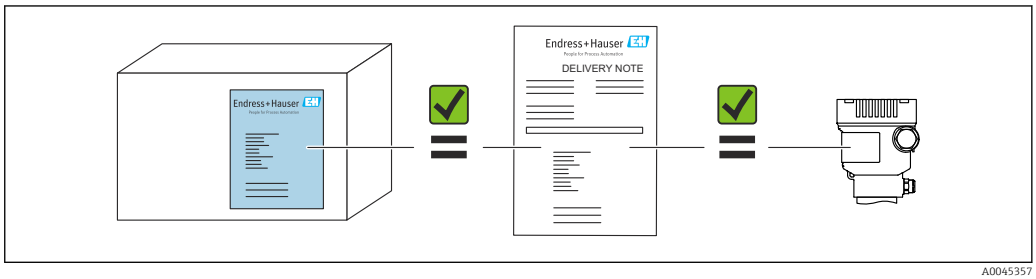

A0045357

4.2 Product identification

The measuring device can be identified in the following ways:
- Nameplate data
- Extended order code with breakdown of the device features on the delivery note
- Enter the serial number from the nameplate into *Device Viewer* (www.endress.com/deviceviewer): All the information about the measuring device and an overview of the Technical Documentation supplied are displayed.
- Enter the serial number from the nameplate into the *Endress+Hauser Operations app* or use the *Endress+Hauser Operations app* to scan the 2-D matrix code (QR-Code) on the nameplate

4.2.1 Nameplate

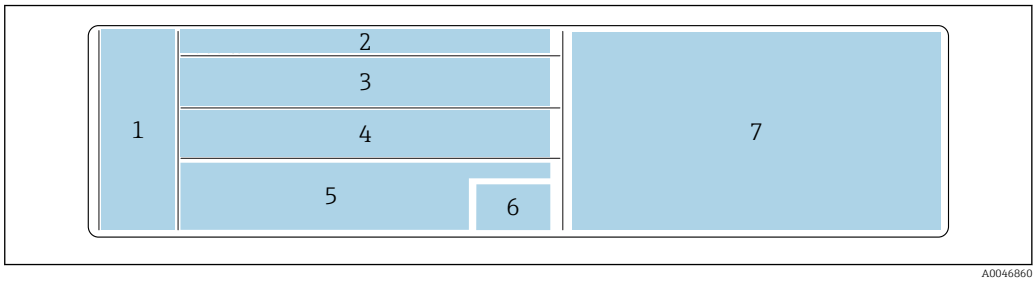

A0046860

4 *Nameplate specifications*

1 *Manufacturer name, device name, manufacturer address*
2 *Order number, extended order number, serial number*
3 *Technical data*
4 *Technical data*
5 *CE mark and certificates*
6 *Date of manufacture: year-month and 2-D matrix code (QR code)*
7 *Additional approvals*

4.3 Manufacturer address

Endress+Hauser SE+Co. KG
Hauptstraße 1
79689 Maulburg, Germany

Place of manufacture: See nameplate.

4.4 Storage and transport

4.4.1 Storage temperature

Store indoors if possible

−20 to +60 °C (−4 to +140 °F)

4.4.2 Transporting the device

- Transport the device to the measuring point in its original or other suitable packaging
- Do not hold or carry the device by the measuring elements during transportation and installation
- Do not bend, shorten, lengthen, or dampen the tuning fork and temperature sensor by applying additional weight for example
- Additional information for devices with pipe extension: Transport the device from the single-chamber housing and pipe extension at the same time

5 Installation

If the measuring point is difficult to access, we recommend that you commission the device in accordance with the commissioning instructions before installing it in the tank.

5.1 Mounting requirements

Recommended mounting locations

- Compact version: On the side of the tank (horizontal orientation)
- Devices with pipe extension: From above (vertical orientation)
- Minimum distance of sensor tip to tank wall: 10 cm (3.94 inch)
- The measuring elements must be fully immersed in the medium
- The measuring elements should be in the bottom third of the tank but above the cone for optimized measurement during fermentation
- Tanks with agitators: Align the tuning fork in the direction of flow parallel to the tank wall

Avoid the following mounting locations

Mounting locations where a buildup of yeast or gas is likely to occur such as at the bottom of the tank or near the filling limit for example

Pipes

- The device can be mounted in a pipe from a pipe diameter of 200 mm (7.87 in) to a flow velocity of ≤2 m/s
- We do not recommend that the device be installed in pipes as the pipe wall is likely to cause feedback effects on the measuring signal
- Please contact your Endress+Hauser representative for further information

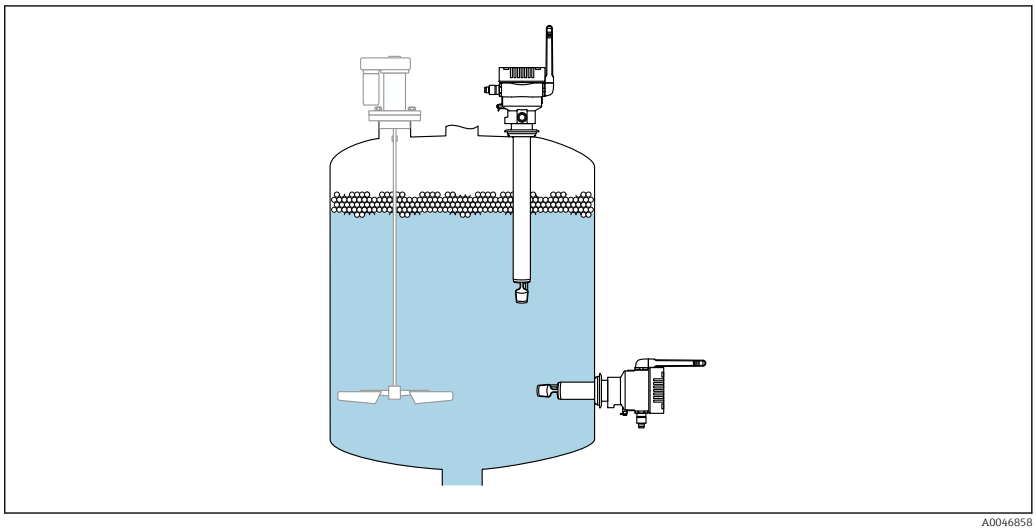

A0046858

5 *Possible orientation*

5.2 Installation instructions

5.2.1 Take clearance into consideration

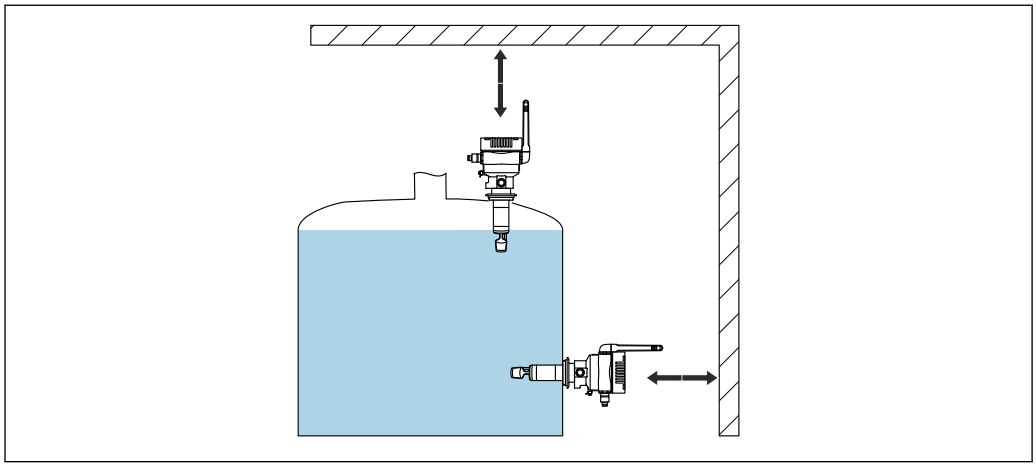

A0046814

6 *Take clearance into consideration*

Allow sufficient space for mounting and electrical connection.

5.2.2 M12 plug

The M12 plug of the device must be pointing downwards.

Position the connecting cable so that it is pointing downwards to ensure that no moisture can penetrate the connection compartment.

If necessary, create a drip loop or use a weather protection cover.

5.2.3 Positioning the antenna

To optimize the transmission quality, position the antenna in such a way that it is not emitting its signal directly on metal. You can rotate the antenna within an angle of 270°.

NOTICE

Angle of rotation of antenna too large!

Damage to internal wiring.

- Rotate the antenna within a maximum angle of 270°.

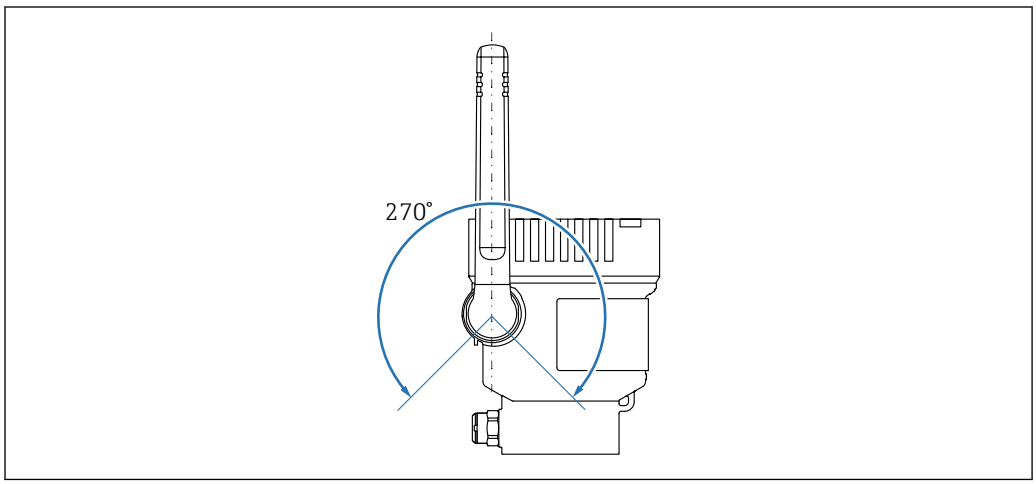

A0046889

7 *Possible angle of rotation of the antenna*

5.2.4 Wireless access point for direct integration version

Follow the instructions below for the mounting location:
- If possible, mount the wireless access point on a ceiling.
- If possible, allow an unobstructed view between Fermentation Monitor and the wireless access point.
- Maximum distance between Fermentation Monitorand wireless access point without additional disturbance: 25 m
- Align the antenna of the Fermentation Monitor and the antenna of the wireless access point in parallel with each other.
- If installed outdoors, protect the wireless access point from weather conditions using an enclosure.

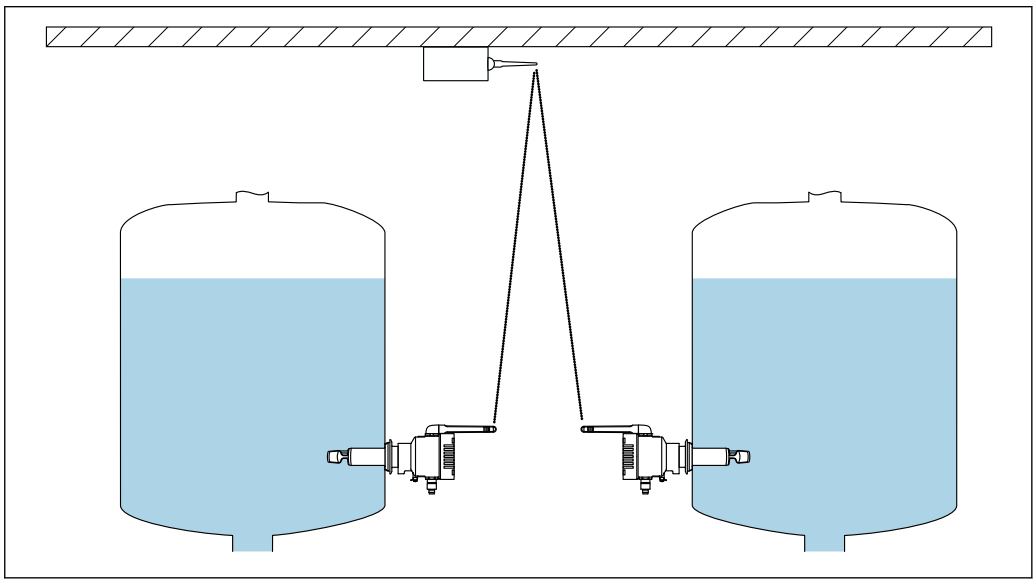

8 *Recommendations for wireless access point mounting location*

5.3 Mounting the measuring device

The seal for the process connection is not included in the scope of supply.

1. Push the seal for the process connection over the measuring elements and the sensor tube as far as the process connection.
2. Install the device in the intended position on the tank.
3. Align the tuning forks of the measuring device in accordance with the diagram.

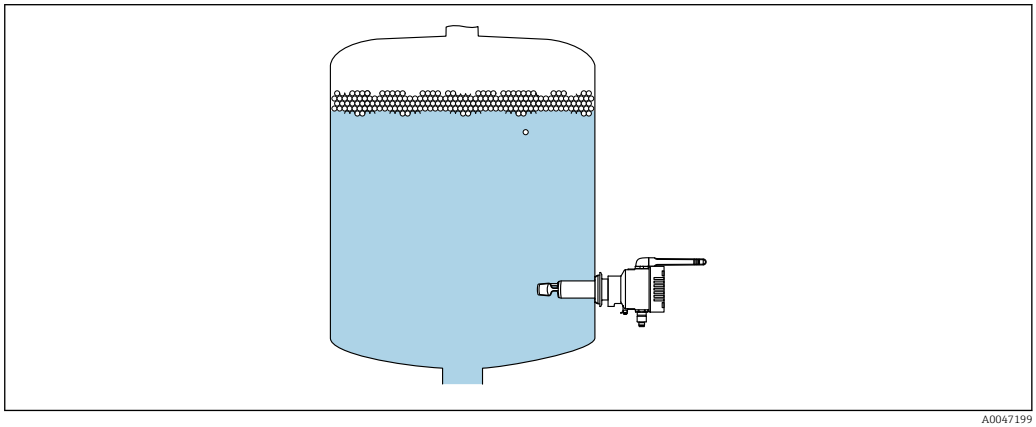

9 *Aligning the tuning forks*

4. Secure the device in place using the process connection.
5. Align the antenna if necessary.

5.4 Post-mounting check

❑ Is the device undamaged (visual inspection)?

❑ Does the device comply with the measuring point specifications?

For example:
- Process temperature
- Process pressure
- Ambient temperature
- Measuring range

❑ Are the measuring point number and labeling correct (visual inspection)?

❑ Is the device adequately protected from wet conditions and direct sunlight?

❑ Is the device properly secured?

6 Electrical connection

6.1 Supply voltage

Recommended supply voltage: 24 V DC

Permitted supply voltage: 20 to 35 V DC

The power unit must provide safe electrical separation and be tested to ensure it meets safety requirements (e.g., PELV, SELV, Class 2).

A suitable circuit breaker should be provided for the device in accordance with IEC/EN 61010.

6.2 Power consumption

2.4 W

6.3 Current consumption

100 mA at 24 V DC

6.4 Connecting the measuring device

The device is powered via the M12 plug.

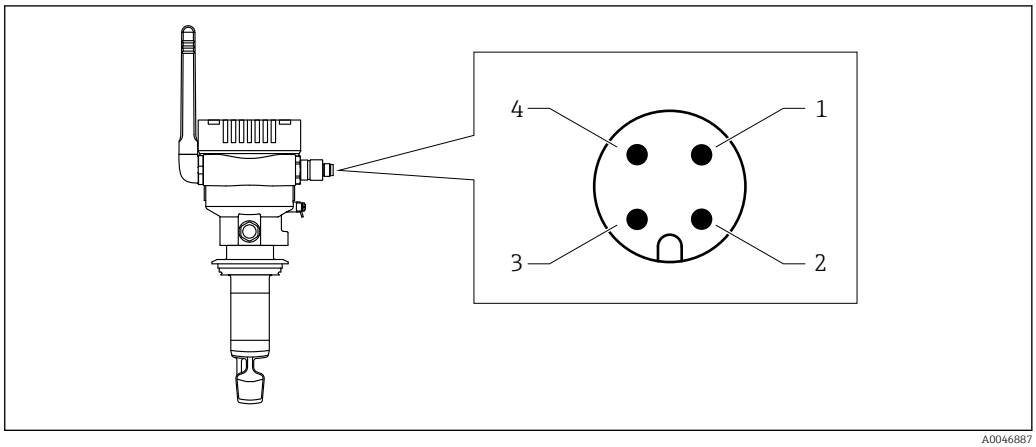

10 Electrical connection via M12 plug and PIN assignment

1 *Minus (–), blue*
2 *N.C.*
3 *Plus (+), brown*
4 *Shield*

You can order a connecting cable with plug-in jack with the device. Accessories: Technical Information TI01628F

Position the connecting cable so that it is pointing downwards to ensure that no moisture can penetrate the connection compartment.

If necessary, create a drip loop or use a weather protection cover.

6.5 Overvoltage protection

Overvoltage protection must be installed on the customer side in the following cases:
- The power supply line to the Fermentation Monitor is longer than 30 meters
- The power supply line to the Fermentation Monitor goes outside the building
- Additional devices are connected to the supply unit for the Fermentation Monitor in parallel

Install the overvoltage protection as close as possible to the Fermentation Monitor.

You can use the Endress+Hauser HAW569 or HAW562 modules for overvoltage protection for example.

6.6 Post-connection check

❑ Are the device and cables free from damage (visual check)?

❑ Does the cable used comply with the requirements?

❑ Is the connected cable strain-relieved?

❑ Is the M12 plug on the device screwed onto the M12 socket of the cable?

❑ Does the supply voltage match the specifications on the nameplate?

❑If supply voltage is present, is the green LED lit?

❑ Is the housing cover mounted and securely fastened?

7 Operation options

7.1 Netilion server platform

The device does not have a display. It has LEDs that provide feedback signals. Operating keys are available for maintenance tasks.

Once the device is supplied with voltage and logged onto the Endress+Hauser Netilion server platform via WLAN, the measured data are transmitted immediately to Netilion. The device is connected to the Endress+Hauser Netilion server platform via the customer's WLAN. You configure and operate the device using Netilion Value.

- Detailed information on Netilion server platform: https://netilion.endress.com
- Detailed information on Netilion Value: https://Netilion.endress.com/app/value
- Netilion Help & Learning (Troubleshooting, Tips & Tutorials, Getting Started: https://help.netilion.endress.com

7.2 Direct integration

The device does not have a display. It has LEDs that provide feedback signals. Operating keys are available for maintenance tasks.

All read and write parameters are made available for further processing via a data module / function block for the automation system.

Protocol-specific data: → 54

Detailed information and files: www.endress.com (Product page > Documents > Device drivers)

7.3 LEDs on the device

LEDs: → 44

8 Commissioning the Netilion Server platform version

8.1 Commissioning requirements

The following conditions must be met to ensure successful commissioning of the device:
- It must be possible to receive the customer WLAN at the measuring point
- The firewall must not block https communication

8.2 Creating a Netilion account

You must first create a Netilion account in order to be able to create the Fermentation Monitor QWX43 as an asset in Netilion.

1. Call up the following web page: https://Netilion.endress.com/app/value
2. Click **Sign up**.
3. Complete the form.
4. Click **Log in**.
   ↳ You will receive an e-mail confirmation.
5. Click on **Verify Account** to verify the account.
6. Enter the e-mail address and password.

8.3 Creating and configuring an asset for Fermentation Monitor

Prerequisite
You are logged into Netilion

1. Select the **+Create** menu item in Netilion Value.
2. Select **Scan Asset**.
3. Scan the QR code that is on the nameplate of the Fermentation Monitor.
4. Click **Save and create System**.
5. Either assign an existing tank (system) to the Fermentation Monitor or create a new tank (system) → 🗎 24.

8.4 Configuring the WLAN for the Fermentation Monitor

The Fermentation Monitor QWX43 provides a WLAN (hotspot) for integration into the customer WLAN. You can integrate the Fermentation Monitor into the customer WLAN via smartphone/tablet/PC/Notebook as follows:

1. Search for the hotspot using the WLAN search function of the smartphone for example.
2. Select the WLAN of the Fermentation Monitor QWX43.
3. Enter the password **EH_QWX43**.
4. In your Internet browser, open the page http://10.10.0.1/.
5. Select the customer's WLAN under **Wireless Networks**.
6. Enter the password for the customer WLAN.

7. Click **Confirm and Exit**.
   ↳ Once the Fermentation Monitor is connected to the Netilion server platform, the Fermentation Monitor automatically starts transmitting the measured values.
8. Log into Netilion.
9. Check whether the measured values are transmitted from Fermentation Monitor to the Netilion server platform version. The green LED on the Fermentation Monitor is lit and the status in the "Asset Details" view for the Fermentation Monitor is green.

8.4.1 Notes on the firewall configuration

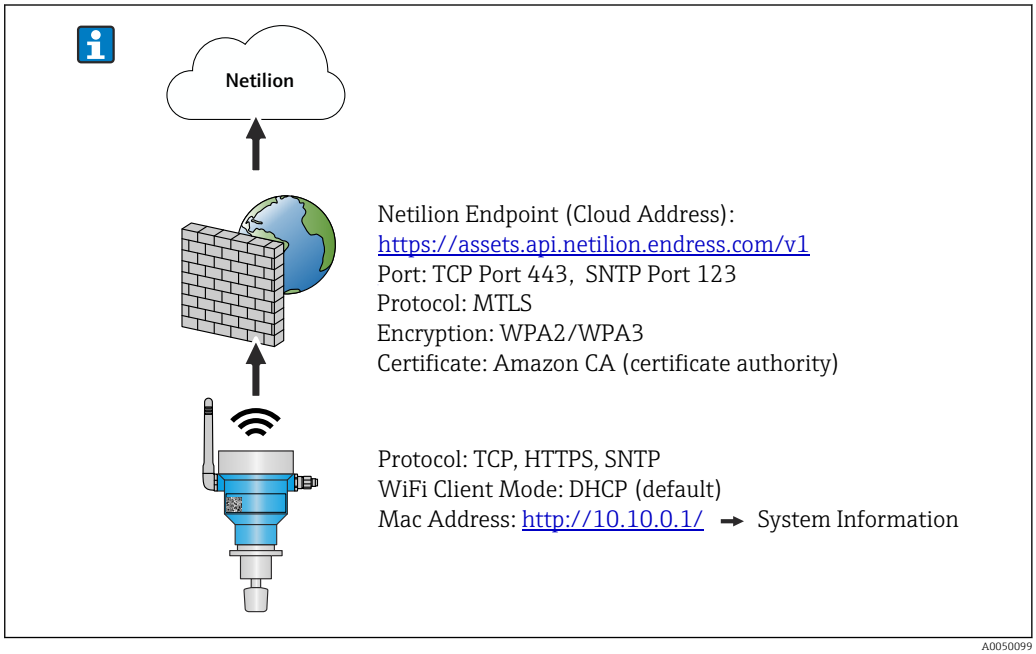

Check the following points of your firewall configuration.

Port
443

Protocols
- Protocol: mTLS
- The firewall must allow TLS and mTLS protocols.
- The firewall must support and allow the corresponding protocol versions, such as TLS 1.2 or TLS 1.3.

Certificate whitelist
- Some firewalls may contain a list of trusted certificate authorities (CAs) that are approved for data exchange.
  The certificates, which are used for the mTLS connections and issued by a CA, must be included in the firewall's whitelist. If the certificates are not included, update the certificate whitelist.
  The server SSL certificates for the connected asset APIs are currently managed by the Amazon CA (Certificate Authority). Root and intermediate certificates from the CA are available at https://www.amazontrust.com/repository/
- Deep Packet Inspection (DPI)
  Some firewalls have DPI features that inspect the encrypted data communication and block data packages categorized as unsafe. The DPI functions of the firewall must not block mTLS connections.

Access rules
Check the firewall's access rules to ensure that the firewall allows data communication between the participating systems. The rules must cover the port, all relevant IP addresses and IP ranges.

Logging and monitoring
Activate the firewall's logging and monitoring functions to make it easier to identify potential problems with mTLS connections. Analyze log files for suspicious activities or recurring error messages in order to get information about possible configuration problems.

For more information and assistance on the firewall used: Refer to documentation or firewall technical support

8.4.2 Descriptions of signal strength quality

Once you access the configuration interface of the Fermentation Monitor, all available networks are displayed under **Wireless Networks** with the current signal quality.

Signal strength	Expected quality	Indicator
> −30 dBm	Maximum signal strength This signal strength can be expected close to WLAN routers or a wireless access point.	
> −50 dBm	Excellent signal strength Anything up to this signal strength can be considered as excellent.	
> −60 dBm	Reliable signal strength Signal strength is still good.	
> −67 dBm	Minimum signal strength required for various services This signal strength is necessary for all services that require smooth and reliable data communication.	
> −70 dBm	Low signal strength The signal strength is sufficient for most cases.	
> −80 dBm	Minimum signal strength required for establishing a connection Not recommended	
> −90 dBm	Unusable signal strength This signal is not strong enough to establish a connection or access services.	

8.5 Creating a tank (system)

1. Select the **All Objects** view in Netilion Value.
2. Click **+Create**.
3. Click **System**.
4. Enter a name.
5. Select the option **Tank** for the **Type** parameter.
6. Enter a description if required.
7. Click **Save**.
8. Assign asset **Fermentation Monitor QWX43**.
9. Assign the required process values to the 4 primary values PV, SV, TV and QV.

10. Configure the top pressure. If a pressure relief valve is installed on the tank, enter the valve setting during fermentation as the gauge pressure with the corresponding unit.
11. Configure the **Automatic Batch Start/Stop Recognition** function → 🗎 42
12. If necessary, configure users and access rights.

Primary values and further process values

All process values are constantly transmitted to the Netilion server platform and saved. The difference between the primary values and other process values is in how they are displayed.

The primary values are clearly presented in an overview in the **Batch Details** view. If you click **More Information**, all of the other process values are displayed for selection → 🗎 40.

The other process values are shown one after another in the **Asset Details** view → 🗎 38.

Proceed as follows if you wish to define a different process value as primary value. Please note that you can only ever define 4 primary values. You require write permission.

1. In the **All Objects** view for the Fermentation Monitor, call up the **System Details** view.
2. Click **Edit**.
   ↳ The **Edit System** View is displayed.
3. Assign the required process value as the primary value.
4. Click **Save**.

8.6 Creating a recipe (beer type)

1. In Netilion Value, select the **All Objects** view.
2. Click on **+Create**.
3. Click on **Recipe**.
4. Enter a name.
5. Select **Type**.
6. If necessary, enter a description for the recipe or the process, upload image and enter the ingredients.
7. Configure alarm settings for the recipe (beer type) → 🗎 42.
8. If necessary, configure users and access rights.

8.7 Creating a batch

If you configured the "Automatic Batch Start/Stop Recognition" function when creating the tank, you do not need to create a batch → 🗎 42.

1. Select the **All Objects** view in Netilion Value.
2. Click on **+Create**.
3. Click on **Batch**.
4. Enter a name.
5. Enter a description if required.
6. Enter the starting time for the batch.
7. Assign the recipe.

8. Assign the tank (system).

9 Commissioning the direct integration version

9.1 Planning network integration

For bidirectional communication and data transmission between the Fermentation Monitor and a control system such as the S7 controller the Fermentation Monitor must be integrated in the existing OT network.

Network integration includes the following steps:
- Configuring the wireless access point → 27
- Planning, configuring and documenting IP addresses → 28
- Enabling port for communication → 28
- Configuring routing between different network segments → 28
- Considering safety aspects

The Fermentation Monitor is connected to the existing OT network via a wireless access point. Depending on the requirements of the existing OT network, the connection between the wireless access point and the OT network can be set up either wirelessly or via a network cable.

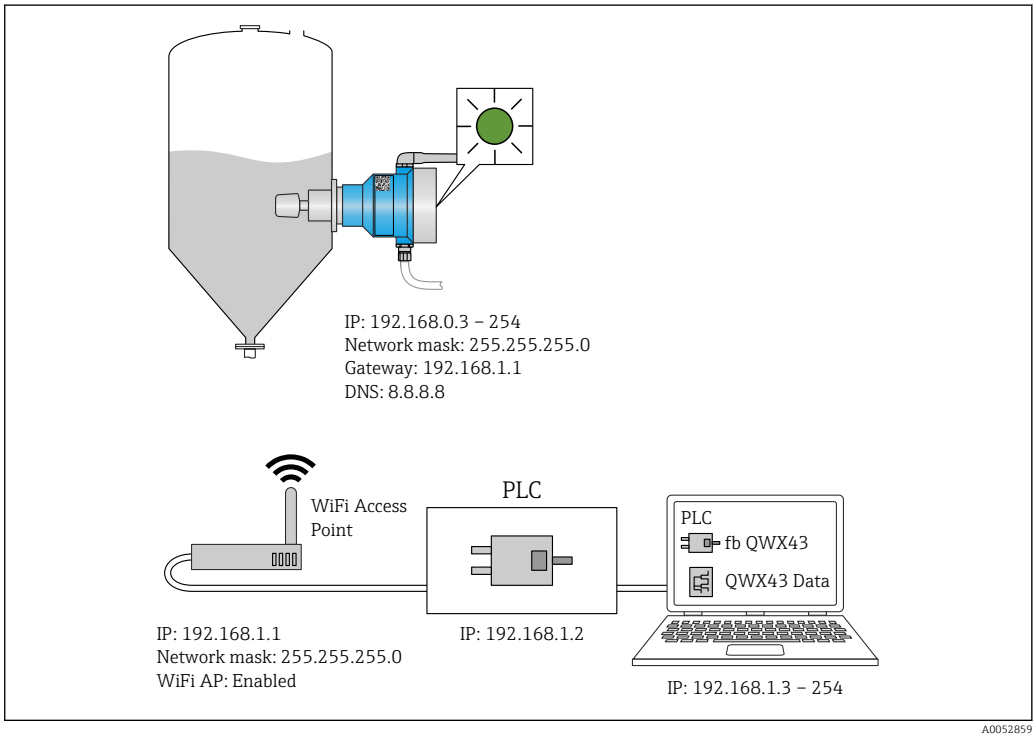

11 Example of network configuration with fixed IP allocation

9.1.1 Configuring and mounting the wireless access point

When configuring the wireless access point, pay attention to the following:
- Configure the wireless access point as an access point.
- The wireless access point and Fermentation Monitor must be in the same network.
- Configure the wireless access point such that the control system can directly access the Fermentation Monitor.
- Configure the wireless access point according to the existing network requirements, including network parameters such as SSID, encryption settings and channel selection.

The Fermentation Monitor currently supports the WPA2-PSK and the WPA3-SAE encryption standards and only supports 2.4 GHz networks.

When mounting the wireless access point, pay attention to the following:
For good signal quality, follow the installation instructions for the wireless access point→ 17.

9.1.2 Planning, configuring and documenting IP addresses

Each Fermentation Monitor must have a unique IP address within a network. This allows for clear identification and communication between the Fermentation Monitor and the control system.

IP address requirements:
- The IP address of the Fermentation Monitor must be in the same IP address range as the OT network.
- The IP address for the Fermentation Monitor must be unique.
- Allocate the planned IP address to the Fermentation Monitor provided. This can be carried out while the WLAN for the Fermentation Monitor→ 28is being configured.
- DHCP is supported. We recommend assigning a fixed IP to the MAC addresses.

Document the IP address of the Fermentation Monitor for future reference and troubleshooting.

9.1.3 Enabling port for communication

For communication with the Fermentation Monitor TCP/IP input port 50000 must be enabled in your network configuration within the firewall.

The TCP/IP input port 50000 cannot be modified. The other ports are dynamically assigned.

9.1.4 Configuring the network routing during network segmentation (VLANs)

Configure the router or switch to manage data communication between network segments according to the plan. In doing so, ensure that data communication at the TCP/IP port 50000 is allowed between the network segments.

9.2 Configuring the WLAN for the Fermentation Monitor

The Fermentation Monitor QWX43 provides a WLAN (hotspot) for integration with the wireless access point. You can connect the Fermentation Monitor via smartphone/tablet/PC/notebook as follows to the wireless access point:

1. Search for the hotspot using the WLAN search function of the smartphone for example.
2. Select the WLAN of the Fermentation Monitor QWX43.
3. Enter the password **EH_QWX43**.
4. In your Internet browser, open the page http://10.10.0.1/.
5. Under **Wireless Networks** select the desired wireless access point.
   ↳ For **Operation Mode PLC Siemens S7** is displayed.
6. Enter the password for the wireless access point.
7. For **Configure IPv4** select the option **Static**.
8. Enter the required network information.
9. Enter the IP address for the Fermentation Monito.
   ↳ The connection is established and the IP is displayed.

10. Click **Confirm and Exit**.
    ↳ The Fermentation Monitor is connected to the control system.

After allocating the IP address, check the network connection of the Fermentation Monitor, using for example a ping test from your PC in the network to the IP address of the Fermentation Monitor.

9.2.1 Notes on the firewall configuration

Check the following points of your firewall configuration.

Port
443

Protocols
- Protocol: mTLS
- The firewall must allow TLS and mTLS protocols.
- The firewall must support and allow the corresponding protocol versions, such as TLS 1.2 or TLS 1.3.

Certificate whitelist
- Some firewalls may contain a list of trusted certificate authorities (CAs) that are approved for data exchange.
  The certificates, which are used for the mTLS connections and issued by a CA, must be included in the firewall's whitelist. If the certificates are not included, update the certificate whitelist.
  The server SSL certificates for the connected asset APIs are currently managed by the Amazon CA (Certificate Authority). Root and intermediate certificates from the CA are available at https://www.amazontrust.com/repository/
- Deep Packet Inspection (DPI)
  Some firewalls have DPI features that inspect the encrypted data communication and block data packages categorized as unsafe. The DPI functions of the firewall must not block mTLS connections.

Access rules
Check the firewall's access rules to ensure that the firewall allows data communication between the participating systems. The rules must cover the port, all relevant IP addresses and IP ranges.

Logging and monitoring
Activate the firewall's logging and monitoring functions to make it easier to identify potential problems with mTLS connections. Analyze log files for suspicious activities or recurring error messages in order to get information about possible configuration problems.

For more information and assistance on the firewall used: Refer to documentation or firewall technical support

9.2.2 Descriptions of signal strength quality

Once you access the configuration interface of the Fermentation Monitor, all available networks are displayed under **Wireless Networks** with the current signal quality.

Signal strength	Expected quality	Indicator
> −30 dBm	Maximum signal strength This signal strength can be expected close to WLAN routers or a wireless access point.	
> −50 dBm	Excellent signal strength Anything up to this signal strength can be considered as excellent.	

Signal strength	Expected quality	Indicator
> −60 dBm	Reliable signal strength Signal strength is still good.	
> −67 dBm	Minimum signal strength required for various services This signal strength is necessary for all services that require smooth and reliable data communication.	
> −70 dBm	Low signal strength The signal strength is sufficient for most cases.	
> −80 dBm	Minimum signal strength required for establishing a connection Not recommended	
> −90 dBm	Unusable signal strength This signal is not strong enough to establish a connection or access services.	

9.3 Setting up the Fermentation Monitor function for the control system

9.3.1 Introduction and overview of QWX43 function module

In order to integrate the Fermentation Monitor in Siemens S7 controllers, Endress+Hauser developed the QWX43 function module. The function module meets the requirements of the S1500/S1200, S300 and S400 controllers.

The function module meets the following requirements:
- Open User Communication via TCP/IP
- Configurable interface for the Fermentation Monitor
- Easy integration into existing systems

Open User Communication via TCP/IP
The function module from Endress+Hauser for the Fermentation Monitor uses the TCP/IP connection to exchange data between the S7 controller and the Fermentation Monitor. This means that the Fermentation Monitor can send and receive data in real time, thus ensuring efficient and precise monitoring of fermentation and/or control.

Configurable for the Fermentation Monitor
The function module contains an interface that was specially designed for the Fermentation Monitor and enables easy and intuitive interaction with Fermentation Monitor. Working directly from the S7 controller, you can call up fermentation parameters, change CO2 settings and call up detailed device information.

Easy integration into existing systems
You can easily integrate the function module into existing s7 controllers. To do so, you must integrate the function block into your project and call up the corresponding function block with the data module.

9.3.2 Prerequisites for integration

- Wifi access point:
  2.4 GHz with WPA2-PSK or WPA3-SAE encryption
- Siemens S7 controllers with Ethernet:
  - CPU S7-1200/1500 series with the corresponding (CP) modules You can also use the integrated Profinet Interfaces .
  - CPU S7-300/400 series with the corresponding (CP) modules including CP 341, CP 342, CP 343, and CP 443
- Supported version of Automation Framework:
  - Siemens STEP 7: Version 5.5 and higher
  - TIA Portal: Version 15.0 and higher
- Particular features of the connection configuration:
  - CPU S7-300/400 series:
    To establish a connection, a CPU stop must be performed in order to update the connection table.
  - CPU S7-1200/1500 series:
    These controllers support dynamic connection updates. A CPU stop is therefore not necessary.
- Network routing and input port
  For communication with the Fermentation Monitor TCP/IP input port 50000 must be enabled within the firewall and the router.

9.3.3 Setting up the function block for the control system

You must set up a function block for each Fermentation Monitor.

Videos on commissioning with Siemens S7 controllers: YouTube > Search "QWX43 Siemens S7"

1. Download the function block from the Endress+Hauser download area (www.endress.com > Download).
2. Import the function block into the control system.
3. Integrate the Fermentation Monitor via the TIA Portal or Simatic into the control system. To do this, create a project and create the function block for the Fermentation Monitor within this project.
4. In the function block, configure the **Input** parameters → 📄 32.
5. For the **sensorData** parameter block, define and allocate the destination in the relevant data module→ 📄 33.

Once the control system receives current data from the Fermentation Monitor, the function block sets the **timeStamp** parameter.

9.4 Description of Fermentation Monitorfunction block

9.4.1 Input parameters

Description of Input parameters

Parameter name	Data type	Description
interfaceID	HW_ANY	Physical Ethernet hardware interface ID that is connected to the Fermentation Monitor
connectionID	CONN_OUC	Reference connection ID that is assigned to the Fermentation Monitor The reference connection ID must be unique for each Fermentation Monitor.
IP_1	Byte	First byte of the IPv4 address for the Fermentation Monitor. First byte of links
IP_2	Byte	Second byte of the IPv4 address for the Fermentation Monitor.
IP_3	Byte	Third byte of the IPv4 address for the Fermentation Monitor.
IP_4	Byte	Fourth byte of the IPv4 address for the Fermentation Monitor.
maximumHeadPressureOfTankAbsolute	Real	Maximum head pressure in the tank Absolute pressure in bar

9.4.2 Output parameters

Description of Output parameters

Parameter name	Data type	Value	Control system parameter name	Description
error	Bool	▪ False: Function block is in a normal state → 32, "Normal states" table ▪ True: Function block is in an error state → 33, "Error state" table		
State	Integer	103	STATE_ERR_Version	The telegram versions of the Fermentation Monitor and the function block do not match.

Normal states

Value	Control system parameter name	Description
0	STATE_WAIT	Waiting for the next sequence in order to request new data from the Fermentation Monitor.
1	STATE_CONNECT	Connection to the Fermentation Monitor via the IPv4 address provided
2	STATE_SEND	Sending a request to the Fermentation Monitor for new data
3	STATE_RECEIVE	Waiting for new data from Fermentation Monitor.

Fault conditions

Value	Control system parameter name	Description
100	STATE_ERR_CONFIG	Error in the IPv4 configuration parameters
101	STATE_ERR_CONNECTION	No connection to the Fermentation Monitor or timeout Timeout: Longer than 30 seconds without a response from the Fermentation Monitor.
102	STATE_ERR_TELEGRAM	Errors in the data received from the Fermentation Monitor

9.4.3 sensorDataparameter block

Parameters for the sensorData (output) parameter block

Parameter name	Control system parameter name	Unit	Notes
Viscosity	viscosity	mPa·s	Viscosity, not temperature-compensated
Temperature	temperature	°C	Temperature, measured with the temperature sensor on the probe of the Fermentation Monitor→ 🗎 12
Sound speed	speedOfSound	m/s	Speed of sound measured with the ultrasound sensor on the probe of the Fermentation Monitor → 🗎 12
Density (20 °C)	densityAt20Degrees	g/cm^3	Density, standardized to 20 °C
Density (15.6 °C)	densityAt15Degrees	g/cm^3	Density, standardized to 15.6 °C
Viscos. (20 °C) (Viscosity (20°C))	viscosityAt20Degrees	mPa·s	Viscosity, temperature-compensated and normalized to 20°C
TS original gravity	TSOriginalGravity	%mass	Percentage of total solids in the original wort after drying at 120 °C
Original gravity	originalGravity	°Plato	Converted from the values of the total solids calculated
TS real extract	TSRealExtract	%mass	Percentage of total solids in the currently available extract after drying at 120 °C
Real extract	realExtract	°Plato	Currently available extract, converted from the values of the determined total solids
Apparent extract	apparentExtract	°Plato	Based on density measurement and conversion according to Balling formula
Residual extract (Balling)	residualExtractBalling	°Plato	Predicted residual extract based on density measurement and conversion according to Balling formula
Alcohol (% w/w)	alcoholPercentMass	%mass	Alcohol content calculated from the combination of ultrasonic and density measurement

Parameter name	Control system parameter name	Unit	Notes
Alcohol (%vol)	alcoholPercentVolume	%vol	Alcohol content calculated from the combination of ultrasonic and density measurement
Alcohol (Balling)	alcoholBaling	%vol	Alcohol content based on density measurement and conversion according to Balling formula
Real fermentation degree	realFermentationDegree	%	Based on the values of the total solids of original wort and extract
Apparent fermentation degree	apparFermentationDeg	%	Based on the values from the Balling formula
Fermentable sugars	fermentableSugars	%mass	Percentage of short-chain sugars, e.g. maltose, determined from the original wort before fermentation
Non-fermentable sugars	nonFermentableSugars	%mass	Percentage of long-chain sugars, e.g. dextrine, determined from the original wort before fermentation
Conc. CO2 (concentration CO_2)	concentrationCo2	%mass	Calculated from the equilibrium pressure depending on the tank top pressure and medium temperature
Fermentation speed	fermentationSpeed	%vol/h	Calculated from the rate of alcohol production per hour
Density (20 °C)_MEBAK	densityAt20DegreesMebak	g/cm^3	Density, normalized at 20 °C and corrected with MEBAK Fit to laboratory values
Density (15.6 °C)_MEBAK	densityAt15DegreesMebak	g/cm^3	Density, normalized at 15.6 °C and corrected with MEBAK Fit to laboratory values
Original gravity_MEBAK	originalGravityMebak	°Plato	Converted from the values of the determined total solids and corrected with MEBAK Fit to laboratory values
Real extract_MEBAK	realExtractMebak	°Plato	Currently available extract, converted from the values of the total solids determined and corrected with MEBAK Fit to the laboratory values
Apparent extract_MEBAK	apparentExtractMebak	°Plato	Based on density measurement and conversion according to the Balling formula and corrected with MEBAK Fit to laboratory values
ResidExtract (Balling)_MEBAK	residExtractBallingMebak	°Plato	Pre-calculated residual extract, based on density measurement and conversion according to Balling formula and corrected with MEBAK Fit to laboratory values

Parameter name	Control system parameter name	Unit	Notes
Alcohol (%w/w)_MEBAK	alcoholPercentMassMebak	%mass	Alcohol content calculated from the combination of ultrasound and density measurements and corrected with MEBAK Fit to laboratory values
Alcohol (%vol)_MEBAK	alcoholPercentVolMebak	%vol	Alcohol content calculated from the combination of ultrasound and density measurements and corrected with MEBAK Fit to laboratory values
Alcohol (Balling)_MEBAK	alcoholBalingMebak	%vol	Alcohol content, based on density measurement and conversion according to the Balling formula and corrected with MEBAK Fit to laboratory values
Real fermentation degree_MEBAK	realFermentationDegMebak	%	Based on the values of the total solids of wort and extract and corrected with MEBAK to laboratory values
Apparent fermentation degree_MEBAK	apparFermentDegMebak	%	Based on values from the Balling formula and corrected with MEBAK Fit to laboratory values
–	sensorUncovered	mPa·s	A measuring element that is not covered indicates the start of a batch.

The sensorData parameter block also includes the following service parameters. These service parameters help Endress+Hauser with troubleshooting.
- service_density
- service_densityH2O
- service_Density45
- service_dSSpeed
- service_DIVO_Capacity
- service_DIVO_Damping
- service_DIVO_Status
- service_relDensity
- service_SSpeedH2O
- service_TDCError
- service_TempElectronic
- service_TempSensor2
- service_TofRaw
- service_TransdFrqc

9.5 Function check

❑ Was the Fermentation Monitor correctly created in the control system? Are the Output Parameter immediately transferred to the data module?

❑ When the tank in which the Fermentation Monitor is mounted is full: Are all measured and calculated parameters transferred?

If the tank is empty, the error **S802** with the source identifier **232**, measured density, measured temperature and the time stamp of the measurement are transmitted → 📄 44.

10 Operation (Netilion Value)

10.1 Description of Netilion Value for the Fermentation Monitor

10.1.1 "Dashboard" view

You can select from the following views for the **Dashboard** view:
- Batch view
- Value view

You can choose between the following layouts for the batch view and value view:
- Grid View
- List View

Batch view

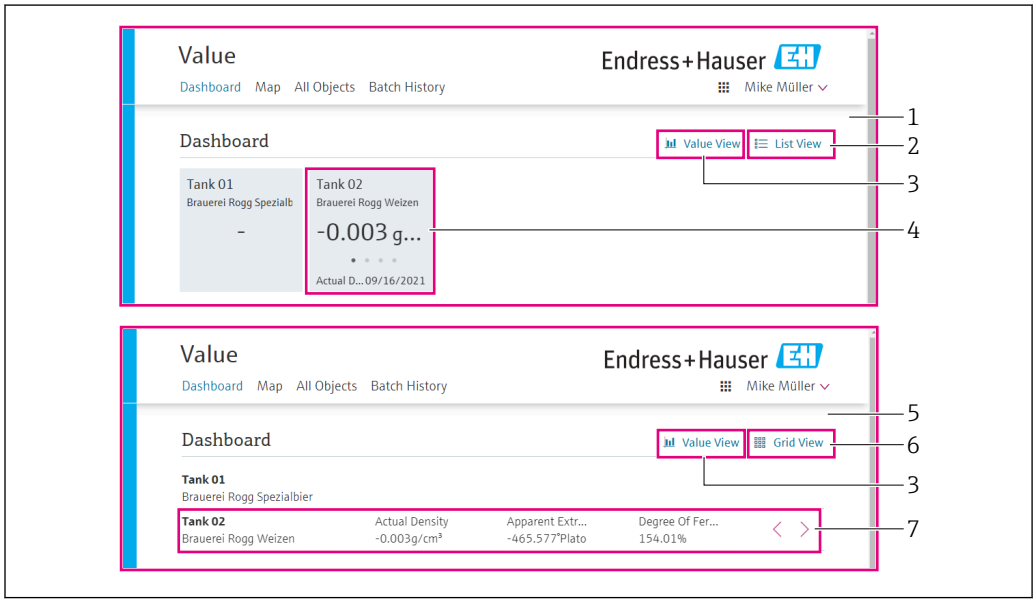

12 *Batch view displayed in Grid View and List View*

1 *Grid View*
2 *Buttons to change to the "List View" layout*
3 *Buttons to change to "Value View"*
4 *Information on tank, recipe and primary value PV. Click the tile to change to the "Batch Details" view→ 40.*
5 *List View*
6 *Buttons to change to the "Grid View" layout*
7 *Information on tank, recipe and process values. Use the arrows to navigate between all of the process values. Click the row to switch to the "Batch Details" view → 40.*

Value View

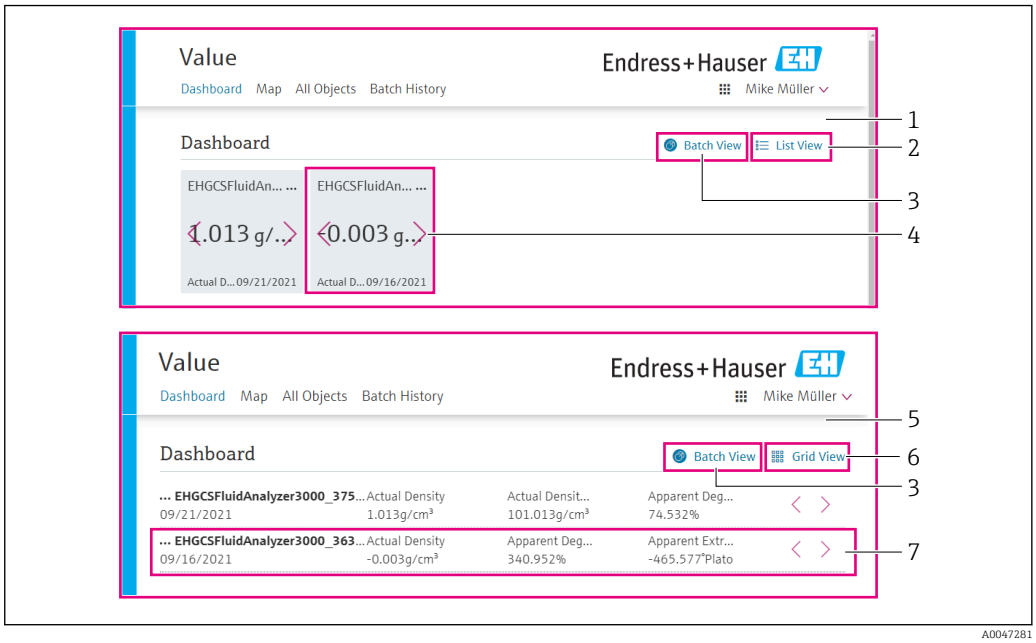

13 Value View as Grid View and List View

1 *Grid View*
2 *Buttons to change to the "List View" layout*
3 *Buttons to change to Batch View*
4 *Information on Fermentation Monitor. Use the arrows to navigate between all of the process values. Click the tile to change to the "Asset Details"* → *38view.*
5 *List View*
6 *Buttons to change to the "Grid View" layout*
7 *Information on Fermentation Monitor. Use the arrows to navigate between all of the process values. Click the tile to change to the "Asset Details"* → *38view.*

10.1.2 "All Objects" view

In Netilion Value assets such as the Fermentation Monitor, recipes, batches and systems such as a tank are identified as objects.

You have the following options with the **All Objects** view:
- Display all objects already created
- Create new objects
- Edit, move or delete existing objects
- Display additional details relating to an object

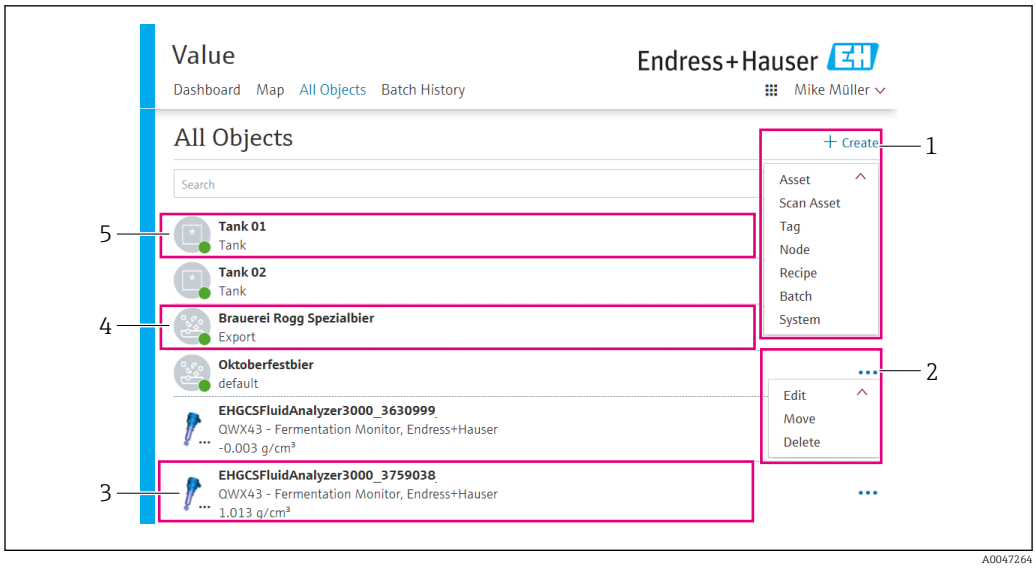

14 Example of "All Objects" view

1 Menu to create new objects
2 Menu to edit, move or delete an object
3 Example of an asset (Fermentation Monitor). Clicking into the line opens the "Asset Details" view.
4 Example of a recipe. Clicking into the line opens the "Recipe Details" view.
5 Example of a system (tank). Clicking into the line opens the "System Details" view.

10.1.3 "Asset Details" view

Devices such as the Fermentation Monitor, for example, are identified as an asset in Netilion Value.

You have the following options with the **Asset Details** view:
- Display information and parameters
- Display all current measured process values
- Display history for all process values
- Assign a system such as a tank, for example, or cancel an existing assignment
- Call up the **System Details** view for an assigned system

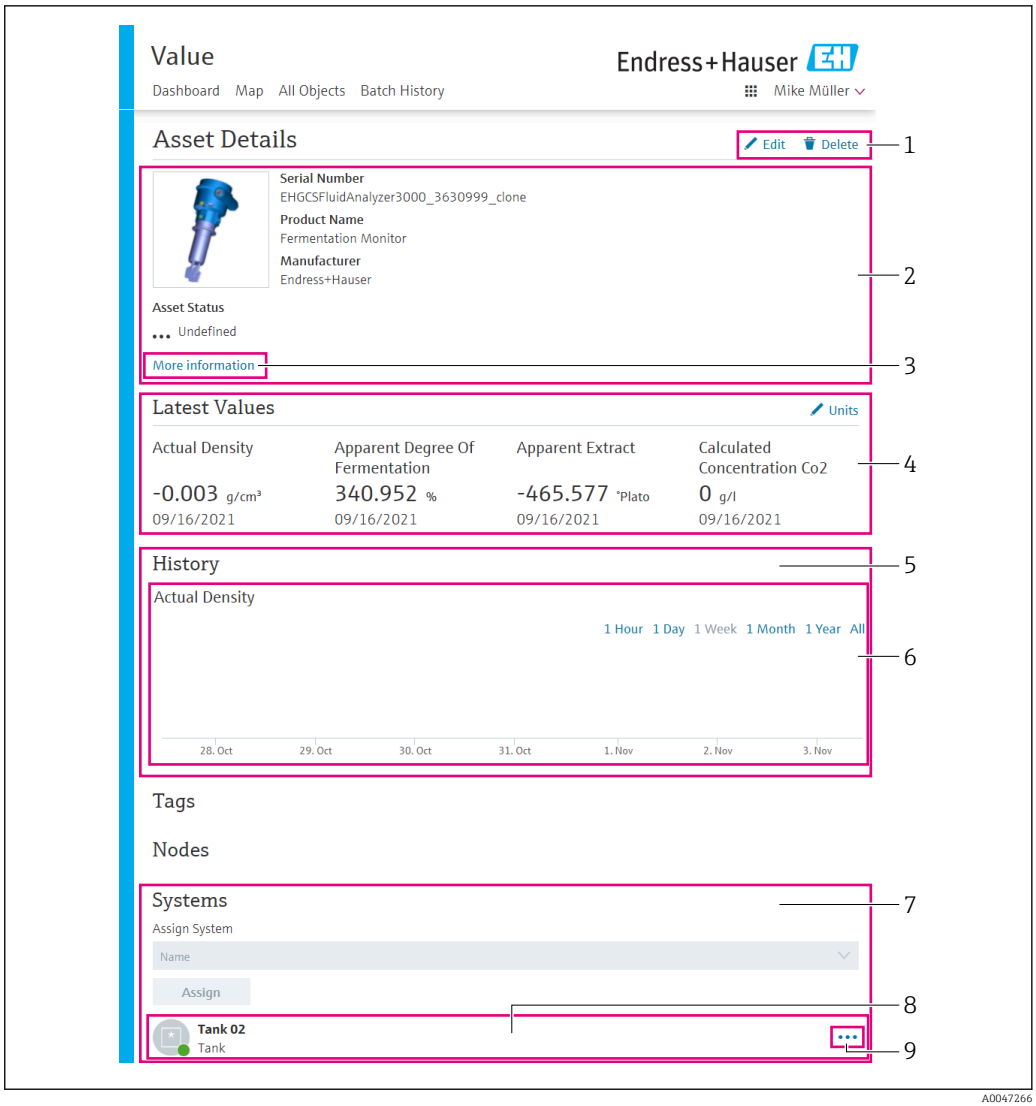

15 *Example of the "Asset Details" view (individual areas are not displayed fully)*

1 *Change parameter configuration or delete asset*
2 *Information and parameters*
3 *Open area with additional information and parameters such as primary values for example*
4 *Display all current measured process values*
5 *Display history for all process values*
6 *Diagram for a process value. Every process value is displayed in a diagram.*
7 *Assigned systems such as a tank for example*
8 *Open menu: Cancel assignment, edit system and delete system*
9 *Example of a system (tank). Clicking into the line opens the "System Details" view.*

10.1.4 "Batch History" view

You have the following options with the **Batch History** view:
- Display all objects already created
- Edit or delete existing objects
- Display additional details relating to a batch

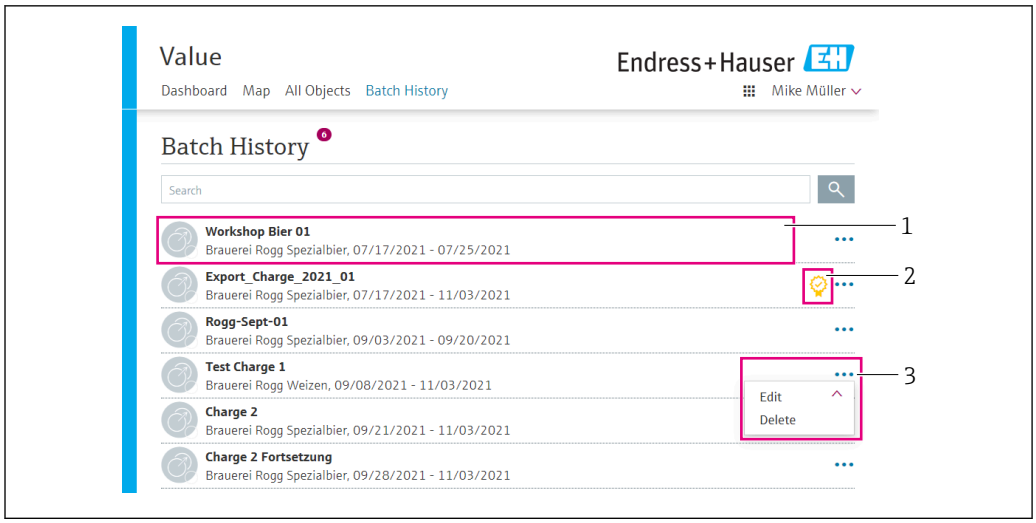

16 Example for "Batch History" view

1 Example of a batch. Clicking into the line opens the "Batch Details" view.
2 Indicates a reference batch
3 Menu to edit or delete a batch

10.1.5 "Batch Details" view

You have the following options with the **Batch Details** view:
- Display information and parameters for a batch
- Change parameter configuration
- Display all current, measured primary values PV, SV, TV and QV
- Display history for the primary values PV, SV, TV and QV
- Call up the **Asset Details** view for the assigned Fermentation Monitor

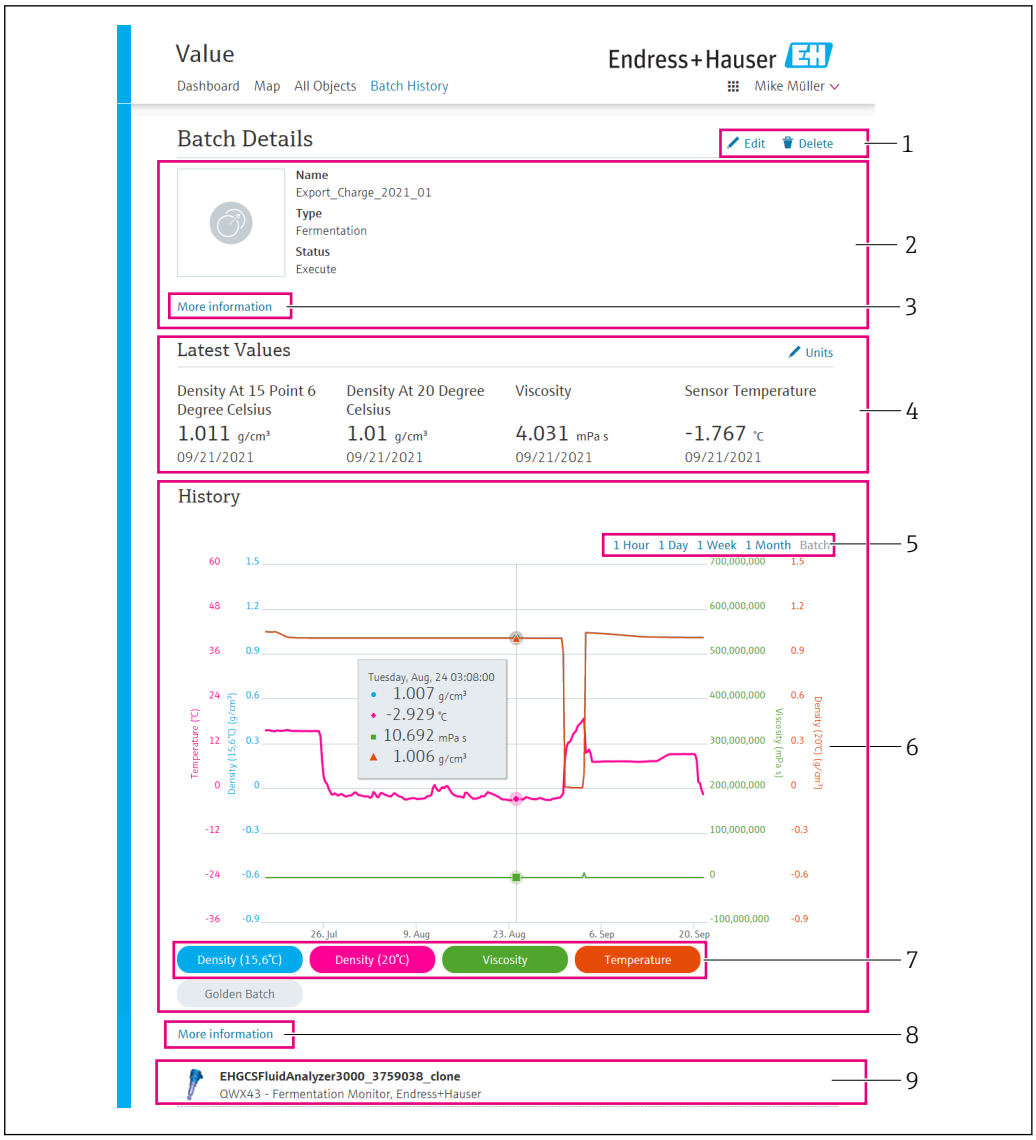

17 *Example for "Batch Details" view*

1 *Change parameter configuration or delete batch*
2 *Information and parameters*
3 *Open area with additional information and parameters*
4 *Display all current measured primary values*
5 *Select the time period for the displayed history of the primary values*
6 *Display history for the primary values*
7 *Enable/disable the display of a primary value in the diagram. If the display of a primary value is disabled, the button appears in gray.*
8 *"More information" button. Clicking on the button opens an area with buttons for the other process values. If you click one of these process values, the history for this process value is displayed in the diagram.*
9 *Assigned Fermentation Monitor. Clicking into the line opens the "Asset Details" view.*

10.2 Exporting data

1. Select the **Profile** menu. You will find the menus under your login name.
2. Click on **+Create** in the **Data Exports** section.
3. Click on **Download** for the required data record.
   ↳ You will receive an e-mail with the exported data record as an attachment.

10.3 Automatic Batch Start/Stop Recognition

The "Automatic Batch Start/Stop Recognition" automatically detects when a new batch starts and when this batch has been completed. Enabling this function ensures that production data are not lost or that production data are not assigned to the incorrect batch. You can call up the batch-related production data via the **Batch History** view.

Configure the Automatic Batch Start/Stop Recognition function

1. Select the **All Objects** view.
2. Click on the required tank in the list.
   ↳ The **System Details** view is displayed.
3. Click on **Edit**.
4. Enable the **Batch Start/Stop Recognition** option.
5. Confirm the recipe.
6. Specify the starting time for the batch. Enable the **On Tank gets filled** option.
7. Specify the finishing time for the batch. Enable either the **On Tank is empty** or **On Temperature is below** option.
8. Enter the limit temperature where necessary.

10.4 Configuring alerts for process events

If you wish to be informed about specific process events automatically, via e-mail for example, you can define thresholds for every recipe. You can change the thresholds subsequently.

Configuring thresholds

1. Select the **All Objects** view.
2. Click on the required recipe in the list.
   ↳ The **Recipe Details** view is displayed.
3. Click on **Thresholds**.
4. Click on **+Create**.
   ↳ The **Create Threshold** view is displayed.
5. Enter a description for the threshold, e.g. "Turn on cooling".
6. Select the measured value that should trigger the alert.
7. Enter the threshold.
8. Enter the tolerance for the threshold.
9. Enable the **Notification** option if an e-mail message should be sent when the threshold is reached.

10.5 Alcohol content – Response at low temperatures

If the beer is cooled to < 5 °C, a large portion of the solids suspended or dissolved in the beer drop to the bottom and the medium in the tank changes. This change influences the density- and sound velocity measurement and the calculated alcohol content can thus drop either during or after cooling.

Since a calibration of the measuring device is not possible at < 5°C in water, the function is extrapolated in the algorithms used at temperatures < 5 °C. This can result in slight deviations in the calculated alcohol content at < 5 °C depending on the beer type.

You can achieve good comparability of the alcohol content of the finished beer and the beer during fermentation in the tank by measuring the value at approx. 5 °C.

11 Diagnostics and troubleshooting

11.1 General troubleshooting

If a diagnostic event occurs in the device, the status signal appears in Netilion in the **Asset Details** view along with the corresponding symbol for the event behavior:

- Failure (F)
- Function check (C)
- Out of specification (S)
- Maintenance required (M)

- Fault-free operation: The green LED on the device is lit permanently
- Alarm or warning: The red LED flashes or is lit permanently

11.2 Diagnostic information via LEDs

LED	Lighting mode	Meaning
Green	Lit permanently	Device is ready for operation. Supply voltage connected. Device is started up. Device is measuring. Device is connected to the Netilion server platform or to the control system.
Green	Flashing	Device is in hotspot mode. Hotspot mode: → 🗎 22
Yellow	Lit permanently	Client such as smartphone, for example, is connected to the device in hotspot mode. This connection is required to access the web server of the Fermentation Monitor and connect to the customer WLAN or wireless access point. Hotspot mode: → 🗎 22
Yellow	Flashing	Wait mode ▪ Connection is being established to the Netilion server platform or the control system ▪ Connection is being established to the client in hotspot mode ▪ Values are transmitted to the Netilion server platform or to the control system
Red	Lit permanently	Other errors: → 🗎 44
Red	Flashing	Sensor error

Diagnosis codes

Diagnostic number	Short text	Remedial measures	Status signal	LED	Source identifier
041 [1)]	Sensor defective	Replace device. Contact Service Department.	F	Red LED flashing	300 – 304
083	Memory card defective	Contact Service Department.	F	Red LED lit permanently	500 – 599
168	Buildup detected	Clean the tuning fork.	M	No specific display from the LEDs. Green LED lit permanently.	900 – 999
169	Frequency deviation detected	Clean the tuning fork. Contact Service Department for recalibration.	M	No specific display from the LEDs. Green LED lit permanently.	327
171	Temperature sensor defective	Replace device. Contact Service Department.	F	Red LED flashing	320

Diagnostic number	Short text	Remedial measures	Status signal	LED	Source identifier
172	Density/viscosity sensor defective	Replace device. Contact Service Department.	F	Red LED flashing	321
173	Ultrasonic sensor defective	Replace device. Contact Service Department.	F	Red LED flashing	322
241	Faulty firmware	1. Check for software update. 2. Contact Service Department.	F	Red LED lit permanently	1015 – 1099
243	Firmware update required	Perform firmware update. → 🗎 48	F	Red LED lit permanently	410
270	Main electronics faulty	Replace device. Contact Service Department.	F	Red LED flashing	100 – 199
271	Main electronics faulty	Replace device. Contact Service Department.	F	Red LED lit permanently	200 – 299
331	Firmware update incorrect	Repeat firmware update → 🗎 48	F	Red LED lit permanently	400 – 409
374	Sensor electronics error	Replace device. Contact Service Department.	F	Red LED flashing	310 – 319
375	Cloud error: Algorithms cannot be executed.	Contact Service Department.	F	No specific display from the LEDs. Green LED lit permanently.	1200 – 1299
400	Communication error: Device cannot connect to the cloud or PLC.	Check network settings Check firewall settings Check function block in the controller Start hotspot mode manually → 🗎 46	F	Red LED lit permanently	600 – 699
430	Connection error: Device cannot dial into customer WLAN or access point	Start hotspot mode manually → 🗎 46 Check access data	F	Red LED lit permanently	700 – 799
802	Sensor uncovered	Check the process	S	No specific display from the LEDs. Green LED lit permanently.	323
804	Sensor out of specification	Check the process	S	No specific display from the LEDs. Green LED lit permanently.	324
805	Calculation error: Input parameters of the algorithms outside the specification	Check input parameters Contact Service Department.	S	No specific display from the LEDs. Green LED lit permanently.	1100 – 1199
836	Temperature outside specification	Check the process	S	No specific display from the LEDs. Green LED lit permanently.	325
843	Medium with too many suspended particles or bubbles	Check installation Contact Service Department.	S	No specific display from the LEDs. Green LED lit permanently.	326
948 [1)]	Signal quality weak	Clean the tuning fork. Check process for bubble formation.	M	No specific display from the LEDs. Green LED lit permanently.	800 – 809
980	Protocol versions between device and PLC do not match.	Perform firmware update. Update the function block in the controller. Contact Service Department.	F	Red LED lit permanently-	1300 – 1399

1) Only for the Netilion server platform version of the Fermentation Monitor, with product date before June 2023

11.3 Diagnostic information in hotspot mode

If the device encounters a problem connecting to the WLAN, it switches to hotspot mode. The green LED flashes.

To be able to read out diagnostic information, you must connect to the Fermentation Monitor's WLAN.
- Netilion server platform version: → 📄 22
- Direct integration version: → 📄 28

To be able read out diagnostic information, you must connect to the Fermentation Monitor's WLAN.

The last fault messages are displayed on the **Connection Issues** tab.

11.4 Restoring hotspot mode

11.4.1 Netilion server platform version

By default, data are transferred from the device to the Endress+Hauser Netilion server platform via the customer WLAN. The green LED is lit permanently if a WLAN connection exists.

The device automatically changes to hotspot mode if there are connection problems with the customer WLAN. If an automatic switch is not possible, the yellow LED flashes for longer than 5 minutes and/or the red LED is lit permanently. In this case, you must start hotspot mode manually.

Start hotspot mode manually

1. Unscrew the housing cover.
2. Press the HOT-SPOT button on the electronic insert until the green LED flashes.
3. Tighten the housing cover.
4. Reconnect the device with the customer WLAN→ 📄 22.

11.4.2 Direct integration version

By default, the data are transmitted from the device to the control system. The green LED is lit permanently if a WLAN connection exists.

If there are connection problems with the customer WLAN, the device automatically switches to hotspot mode. If an automatic switch is not possible, the yellow LED flashes for longer than 5 minutes and/or the red LED is lit permanently. In this case, you must start hotspot mode manually.

Start hotspot mode manually

1. Unscrew the housing cover.
2. Press the HOT-SPOT button on the electronic insert until the green LED flashes.
3. Tighten the housing cover.
4. Reconnect the device to the wireless access point → 📄 28.

11.5 Restarting the device

Manually restarting the device

1. Unscrew the housing cover.

2. Press the RE-BOOT key on the electronic insert.
   ↳ The device is restarted. All device settings, such as the WLAN configuration, are retained.
   The device automatically connects to the customer WLAN or wireless access point.
3. Tighten the housing cover.

11.6 Firmware history

V01.00.zz (10.2021)
- Valid as of document version: 01.21
- Changes: None; 1st version

V02.00.zz (6.2023)
- Valid as of document version: 02.23
- Changes: New version Direct integration

11.7 Fermentation Monitor limiting behavior

In rare cases, the algorithms and the sensor equipment of the Fermentation Monitor can generate invalid values such as NaN (Emergency No) or Inf (Infinity). To facilitate further processing of these values and ensure data integrity, a substitute value method is implemented.

If the Fermentation Monitor detects an invalid value, this value is replaced by the substitute value **-99999**. This value is outside the permitted value range of the data block and therefore indicates an error in the data generation.

In addition to the substitute value method, error and diagnostic codes are set → 44.

12 Maintenance

No specific maintenance work is required.

We recommend you carry out a recalibration of the device at regular intervals. For more information contact the Service Department at Endress+Hauser.

12.1 Maintenance tasks

It is not permitted to use the device with abrasive media. Material deposits on the sensor head can lead to malfunction and impair correct operation. However, a food-grade cleaning is possible while the device is installed and is recommended, e.g. CIP (Cleaning in Place).

12.2 Updating the firmware

Before you can carry out a firmware update via Netilion with the direct integration variant, you must set the Fermentation Monitor to hotspot mode → 46. For **Operation Mode** select the option **Cloud**. Once you have performed the firmware update, you must restore the Fermentation Monitor to hotspot mode. For **Operation Mode** select the option **PLC Siemens S7**.

1. Log into Netilion Value https://netilion.endress.com/app/value
2. Open the **Administration** menu. Path: Name > Administration

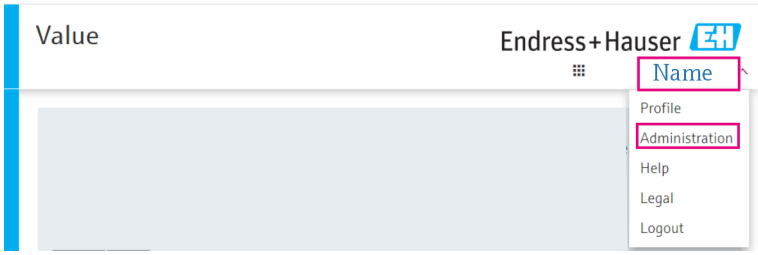

The "ID" view is displayed.

3. Click **Firmware Update Scheduler**.

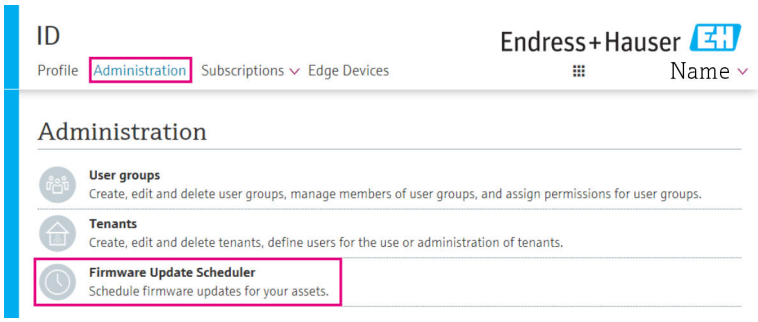

The "Firmware Update Scheduler" view is displayed. An update is available for devices marked with a red exclamation mark.

4. Click the device for which an update is to be performed.

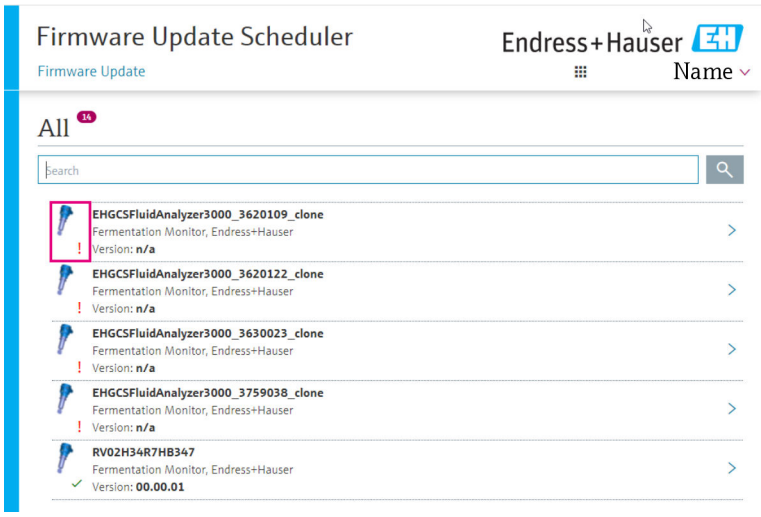

The **Asset Details** view is displayed.

5. Select the required firmware version in the **Firmware version to be installed** field.
6. Select the date and time in the **Update at** field.
7. Click the **Schedule Update** button.
   ↳ The yellow LED on the device flashes during the update.

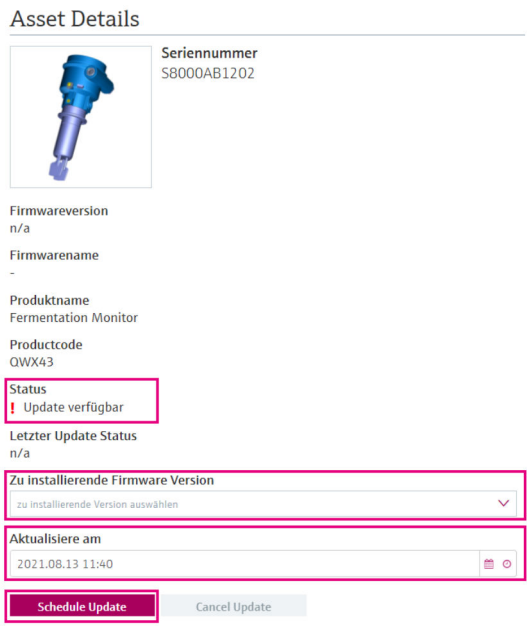

If the update was successful, a green tick is displayed in the Status field.

13 Repair

13.1 General information

13.1.1 Repair concept

The device may only be repaired by Endress+Hauser Service.

For more information contact the Service Department at Endress+Hauser.

13.2 Return

The requirements for safe device return can vary depending on the device type and national legislation.

1. Refer to the web page for information:
   http://www.endress.com/support/return-material
2. Return the device if the wrong device was ordered or delivered.

13.3 Disposal

As required by the Directive 2012/19/EU on waste electrical and electronic equipment (WEEE), Endress+Hauser products are marked with the depicted symbol in order to minimize the disposal of WEEE as unsorted municipal waste. Such products may not be disposed of as unsorted municipal waste and can be returned to Endress+Hauser for disposal under the conditions stipulated in the General Terms and Conditions or as individually agreed by Endress+Hauser.

14 Technical data

14.1 Input

14.1.1 Measured variable

Measured process variables

- Viscosity
- Density
- Temperature
- Sound velocity

Calculated process variables

Process variable	Unit	Notes
Density (20 °C)	g/cm^3	Density, standardized to 20 °C
Density (15.6 °C)	g/cm^3	Density, standardized to 15.6 °C
Viscos. (20 °C) (Viscosity (20 °C))	mPa·s	Viscosity, temperature-compensated and standardized to 20 °C
TS original gravity	%mass	Percentage of total solids in the original gravity after drying at 120 °C
Original gravity	°Plato	Converted from the values of the total solids calculated
TS real extract	%mass	Percentage of total solids in the currently available extract after drying at 120 °C
Real. extract	°Plato	Extract currently present, converted from the values of the total solids calculated
Appar. extract	°Plato	Based on density measurement and conversion according to Balling formula
Residual extract (Balling)	°Plato	Predicted residual extract based on density measurement and conversion according to Balling formula
Alcohol (%w/w)	%mass	Alcohol content calculated from the combination of ultrasonic and density measurement
Alcohol (%vol)	%vol	Alcohol content calculated from the combination of ultrasonic and density measurement
Alcohol (Balling)	%vol	Alcohol content based on density measurement and conversion according to Balling formula
Real. ferm %	%	Based on the values of the total solids of original gravity and extract
Appar. ferm. %	%	Based on the values from the Balling formula
Fermentable sugars	%mass	Percentage of short-chain sugars, e.g. maltose, determined from the original gravity before fermentation
Non-fermentable sugars	%mass	Percentage of long-chain sugars, e.g. dextrine, determined from the original gravity before fermentation

Process variable	Unit	Notes
Conc. CO2 (Concentration CO_2)	%mass	Calculated from the equilibrium pressure depending on the tank top pressure and medium temperature
Fermentation speed	%vol/h	Calculated from the rate of alcohol formation per hour
Density (20 °C)_MEBAK	g/cm^3	Density, standardized to 20 °C and corrected to laboratory values with MEBAK Fit
Density (15.6 °C)_MEBAK	g/cm^3	Density, standardized to 15.6 °C and corrected to laboratory values with MEBAK Fit
Original gravity_MEBAK	°Plato	Converted from the values of the total solids calculated and corrected to laboratory values with MEBAK Fit
Real. Extract_MEBAK	°Plato	Extract currently present, converted from the values of the total solids calculated and corrected to laboratory values with MEBAK Fit
Appar. Extract_MEBAK	°Plato	Based on density measurement and conversion according to Balling formula and corrected to laboratory values with MEBAK Fit
Residual extract (Balling)_MEBAK	°Plato	Predetermined residual extract, based on density measurement and conversion according to Balling formula and corrected to laboratory values with MEBAK Fit
Alcohol (%w/w)_MEBAK	%mass	Alcohol content, calculated from the combination of ultrasonic and density measurement and corrected to laboratory values with MEBAK Fit
Alcohol (%vol)_MEBAK	%vol	Alcohol content, calculated from the combination of ultrasonic and density measurement and corrected to laboratory values with MEBAK Fit
Alcohol (Balling)_MEBAK	%vol	Alcohol content, based on density measurement and conversion according to Balling formula and corrected to laboratory values with MEBAK Fit
Real. ferm %_MEBAK	%	Based on the values of the total solids of original gravity and extract and corrected to laboratory values with MEBAK Fit
Appar. ferm. %_MEBAK	%	Based on values from the Balling formula and corrected to laboratory values with MEBAK Fit

14.1.2 Measuring range

Measured process variables

- Viscosity: 0 to 1 000 mPa·s
- Density: 0.3 to 2.0 g/cm^3
- Temperature for fermentation: −5 to +35 °C (+23 to +95 °F)
  Higher measured value deviations are possible outside the temperature range for fermentation.
- Sound velocity: 800 to 2 200 m/s
- Measured values also visible in the gas phase, with the exception of sound velocity

Calculated process variables

- Original gravity / extract: up to 32 °Plato
  Higher measured value deviations are possible between 20 and 32 °Plato.
- Alcohol: up to 12 %mass

No measured value is output if 32 °Plato and/or 12 %mass is/are exceeded.

14.2 Output

14.2.1 Output signal

Netilion server platform

A web server is integrated in the Fermentation Monitor. This web server is used to connect the Fermentation Monitor to the Endress+Hauser Netilion server platform via the customer's WLAN.

- WLAN: 2.4 GHz
- Transmission rate: 1/min

In the event of a network failure, the measured data are saved in the device for a maximum period of 1 week.

Direct integration

A web server is integrated in the Fermentation Monitor. This web server is used to configure the Fermentation Monitor and connect it to a wireless access point or integrate it into the customer's automation system network.

- Wireless connection (WLAN 2.4 GHz): TC/ IP
- Wired connection with the control system, e.g. Siemens S7: TCP/IP (LAN 10/100 Mbps Ethernet)
- Transmission rate: 1/min

14.2.2 Signal on alarm

Netilion server platform

- LED signaling directly on the device
- Diagnostic messages via Netilion Value

Direct integration

- LED signaling directly on the device
- Diagnostic messages communicated to the control system via fault bits within the data module

14.2.3 Protocol-specific data

Netilion server platform

The Fermentation Monitor QWX43 uses:
- TCP/IP Internet protocol and the secure transport layer TLS (v1.2)
- Application layer protocol: HTTPS

Direct integration

The Fermentation Monitor QWX43 uses:
- Direct connection protocol: TCP/IP
- Application layer protocol: TCP/IP-based Open User Communication (OUC)
- Device description file / function block
  For Siemens S7 CPUs: S7 library compatible with TIA Portal/SIMATIC STEP 7

Detailed information and files: www.endress.com (Product page > Documents > Device drivers)

14.3 Environment

14.3.1 Ambient temperature range

−20 to +60 °C (−4 to +140 °F)

The device is also suitable for outdoor operation.

Outdoor operation in strong sunlight:
- Mount the device in the shade.
- Avoid direct sunlight, particularly in warmer climactic regions.
- Use a weather protection cover.

14.3.2 Storage temperature

Store indoors if possible

−20 to +60 °C (−4 to +140 °F)

14.3.3 Operating height

As per IEC 61010-1 Ed.3:
2 000 m (6 562 ft) above sea level

14.3.4 Humidity

Operate up to 100%. Do not open in a condensing atmosphere.

14.3.5 Climate class

As per IEC 60068-2-38 test Z/AD

14.3.6 Degree of protection

IP66/67, NEMA Type 4X

IP66/67
- Complete protection against contact and complete protection against dust (dust-proof)
- Protected against powerful water jets or protected against temporary immersion in water

NEMA Type 4X
Indoor or outdoor installation, protects against windblown dust and rain, splashing water, water jets and corrosion

14.3.7 Shock and vibration resistant

Vibration resistance according to EN60068-2-64 and shock resistance according to DIN EN60068-2-27

14.3.8 Mechanical stress

Avoid mechanical deformation of, or shocks to the device's fork tines as this can have a negative influence on the measuring accuracy.

14.3.9 Internal cleaning

CIP cleaning

Suitable for CIP cleaning with a constant temperature of 110 °C (230 °F) maximum

14.3.10 Electromagnetic compatibility (EMC)

As per IEC/EN 61326 series

Overvoltage category II

Maximum deviation under interference influence: < 1 % of measuring range

Overvoltage protection must be installed at the customer site in the following cases:
- The power supply line to the Fermentation Monitor is longer than 30 meters.
- The power supply line to the Fermentation Monitor leaves the building.
- Other consumers are connected in parallel to the power supply unit for the Fermentation Monitor.

Install the overvoltage protection as close to the Fermentation Monitor as possible.

You can install Endress+Hauser surge arresters HAW569 or HAW562, for example, as an overvoltage protection.

14.4 Process

14.4.1 Process temperature range

−10 to +110 °C (+14 to +230 °F)

14.4.2 Process pressure range

0 to 16 bar (0 to 232.1 psi) depending on the selected process connection and possible certificate-related restrictions (e.g. CRN)

Index

A
Assets . . . 38

C
CE mark . . . 9
Commissioning
  Netilion Server platform . . . 22
Creating an asset . . . 22

D
Declaration of Conformity . . . 9
Device documentation
  Supplementary documentation . . . 6
Device restart . . . 46
Device Viewer . . . 13
Diagnosis . . . 44
Diagnostic numbers . . . 44
Disposal . . . 50
Document
  Function . . . 5
Document function . . . 5

E
Electrical connection . . . 19

F
Firewall configuration . . . 23, 29
Firmware update . . . 48

H
Hotspot . . . 22, 28
Hotspot mode
  Restore . . . 46

I
Identify device . . . 13
Installation . . . 15

L
LEDs . . . 44

M
M12 plug . . . 19
Main values . . . 24
Maintenance . . . 48
Measured variables . . . 51
Measuring principle . . . 10
Mounting the device . . . 17

N
Nameplate . . . 13
Netilion account . . . 22
Netilion server platform . . . 10
Netilion Value . . . 36

O
Objects . . . 37
Occupational safety . . . 9
Operational safety . . . 9

P
Positioning the antenna . . . 16
Post-connection check . . . 20
Probe designs . . . 12
Process values . . . 24
Process variables . . . 51
Product design . . . 12
Product safety . . . 9

R
Repair concept . . . 50
Requirements concerning the staff . . . 8
Return . . . 50

S
Source identifier . . . 44
System configuration . . . 10

T
Temperature sensor . . . 12
Troubleshooting . . . 44
Tuning fork (vibronic) . . . 12

U
Ultrasonic sensor . . . 12

W
WLAN configuration . . . 22, 28

71619546

www.addresses.endress.com

Endress+Hauser

People for Process Automation