IG21, IG21R and IG31R Hardware Installation Guide

First Published: 07-16-2020

Last Updated: 01-07-2020

Organization

This guide includes the following sections:

Cautions and Warnings, page 2	Summary of relevant cautions or warnings to adhere to when installing and using the product.
Conventions, page 2	Details on style conventions used in the guide.
Before You Begin, page 3	Provides a general overview of the IG21, IG21R and IG31R Gateways. It also provides important site preparation and safety measures to follow before installing the system.s
IG21, IG21R and IG31R Part Numbers, page 3	Provides a summary of the systems and part numbers.
DIN Rail Mounting Instructions for IG21, IG21R and IG31R, page 4	Provides instructions on how to attach a DIN rail for horizontal and vertical mounting.
Mounting the Router on a Wall Using Mounting Brackets, page 7	Provides instructions on how to attach a mounting bracket to the IG21, IG21R and IG31R for horizontal and vertical mounting.
Mounting the Router on a Wall Using Two KeyHoles, page 9	Provides instructions on how to mount the router on drywall.

Front Panel and LED Definition, page 10	Provides an overview of key components on the front panel and LEDs.
IG21R and IG31R Overview, page 13	Provides an overview of the feature set of the IG systems and LED definitions.
FCC and ISED Interference Statement, page 16	Please review this statement regarding Radio Frequency

Cautions and Warnings

CAUTION : Do not place anything on top of the router that weighs more than 10 pounds (4.5 kilograms), and do not stack routers on a desktop. Excessive weight on top of the router could damage the chassis.

CAUTION : Do not install the router or power supplies next to a heat source of any kind, including heating vents.

WARNING : Read the installation instructions before connecting the system to the power source. Statement 1004

WARNING : This product relies on the building's installation for short-circuit (over current) protection. Ensure that the protective device is rated not greater than: 5 Amps. Statement 1005

*WARNING :*This unit is intended for installation in restricted access areas. A restricted access area can be accessed only through the use of a special tool, lock and key, or other means of security. Statement 1017

*WARNING :*This equipment must be grounded. Never defeat the ground conductor or operate the equipment in the absence of a suitably installed ground conductor. Contact the appropriate electrical inspection authority or an electrician if you are uncertain that suitable grounding is available. Statement 1024

WARNING : Only trained and qualified personnel should be allowed to install, replace, or service this equipment. Statement 1030

WARNING : Ultimate disposal of this product should be handled according to all national laws and regulations.
Statement 1040

WARNING :To prevent the system from overheating, do not operate it in an area that exceeds the maximum recommended ambient temperature of: 60C Statement 1047

WARNING : No user-serviceable parts inside. Do not open. Statement 1073

WARNING : This product is not intended to be directly connected to the Cable Distribution System. Additional regulatory compliance and legal requirements may apply for direct connection to the Cable Distribution System. This product may connect to the Cable Distribution System ONLY through a device that is approved for direct connection. Statement 1078

Conventions

This document uses the following conventions.

Conventions	Indication
bold font	Commands and keywords and user-entered text appear in **bold** font.
italic font	Document titles, new or emphasized terms, and arguments for which you supply values are in *italic* font.
[ ]	Elements in square brackets are optional.
{x | y | z }	Required alternative keywords are grouped in braces and separated by vertical bars.
[x | y | z]	Optional alternative keywords are grouped in brackets and separated by vertical bars.
string	A nonquoted set of characters. Do not use quotation marks around the string or the string will include the quotation marks.
`courier font`	Terminal sessions and information the system displays appear in courier font.

Conventions	Indication
< >	Nonprinting characters such as passwords are in angle brackets.
[ ]	Default responses to system prompts are in square brackets.
!, #	An exclamation point (!) or a pound sign (#) at the beginning of a line of code indicates a comment line.

Note: Means *reader take note*. Notes contain helpful suggestions or references to material not covered in the manual.

CAUTION: Means reader be careful. In this situation, you might perform an action that could result in equipment damage or loss of data.

WARNING: IMPORTANT SAFETY INSTRUCTIONS

Means danger. You are in a situation that could cause bodily injury. Before you work on any equipment, be aware of the hazards involved with electrical circuitry and be familiar with standard practices for preventing accidents. Use the statement number provided at the end of each warning to locate its translation in the translated safety warnings that accompanied this device.

CAUTION: Cable distribution system should be grounded (earthed) in accordance with ANSI/NFPA 70, the National Electrical Code (NEC), article 800, Grounding of Outer Conductive Shield of a Coaxial Cable.

Warning: Only trained and qualified personnel should be allowed to install, replace, or service this equipment. Statement 1030

SAVE THESE INSTRUCTIONS

Regulatory: Provided for additional information and to comply with regulatory and customer requirements.

Before You Begin

Because the IG21, IG21R and IG31R are radio devices, they are susceptible to common causes of interference that can reduce throughput and range. Follow these basic guidelines to ensure the best possible performance:

- Review the FCC guidelines for installing and operating outdoor wireless LAN devices at: https://www.cisco.com/c/en/us/products/collateral/routers/3200-series-rugged-integrated-services-routers-isr/data_sheet_c78-647116.html
- Perform a site survey before beginning the installation.
- Install the IG21, IG21R, and IG31R in an area where structures, trees, or hills do not obstruct radio signals to and from the devices.

IG21, IG21R and IG31R Part Numbers

The IG21 is a gateway that connects Smart Devices and Sensors to a Customer Network or Cloud applications.

Table 1 IG21, IG21R and IG31R IoT Gateways

	IoT Gateway Interface		**Rugged IoT Gateway**	
Carrier	LTE	LTE + WiFi	LTE	LTE+WiFi+CAN-bus + Ignition
Verizon	IG21-VZ-K9	IG21-VZ-B-K9	IG21R-VZ-K9	IG31R-VZ-B-K9
North America	IG21-NA-K9	IG21-NA-B-K9	IG21R-NA-K9	IG31R-NA-B-K9
Europe	IG21-EU-K9	IG21-EU-E-K9	IG21R-EU-K9	IG31R-EU-E-K9

DIN Rail Mounting Instructions for IG21, IG21R and IG31R

The DIN Rail Mounting Kit supports either a horizontal or vertical mounting of the IG21.

To attach the DIN Rail Bracket to the IG21, follow the steps noted below:

1. Position the DIN Rail Bracket over the two mounting holes as shown in Figure 1.
2. Attach the DIN Rail Bracket to the back of the IG21 using the two screws provided using a torque of 13-15 inch-pound. The screw thread diameter is 3.0 mm, the screw head diameter is 5.5 mm, and the screw length is 7.0 mm.

Figure 1 DIN Rail Mounting Bracket on IG21 is shown in the illustration

Mounting Kit Contents

- Adapter plate (1) [part number: pending]
- DIN Rail Bracket (1) [part number: pending]
- Screws

Note: All of the screws noted throughout this guide, will be shipped with the mounting kits.

Attaching the Adapter Plate for IG21R and IG31R

To attach the Adapter Plate to the IG21R or IG31R, follow the steps noted below:

1. Position the Adapter Plate over the four mounting holes as shown in Figure 2.
2. Attach the Adapter plate to the back of the IG21R or IG31R using the four screws provided using 13-15 inch-pound of torque. The screw thread diameter is 4.0 mm, the screw head diameter is 8.0mm, and the screw length is 4.7 mm.

You are now ready to attach the DIN rail bracket to support either a Vertical or Horizontal mounting of the IG21R or IG31R. Refer to the appropriate section noted below:

- Attaching the DIN Rail Bracket to Support Vertical Mounting, page 5
- Attaching the DIN Rail Bracket to Support Horizontal Mounting, page 6

Figure 2 Attaching Adapter Plate to the IG21R or IG31R

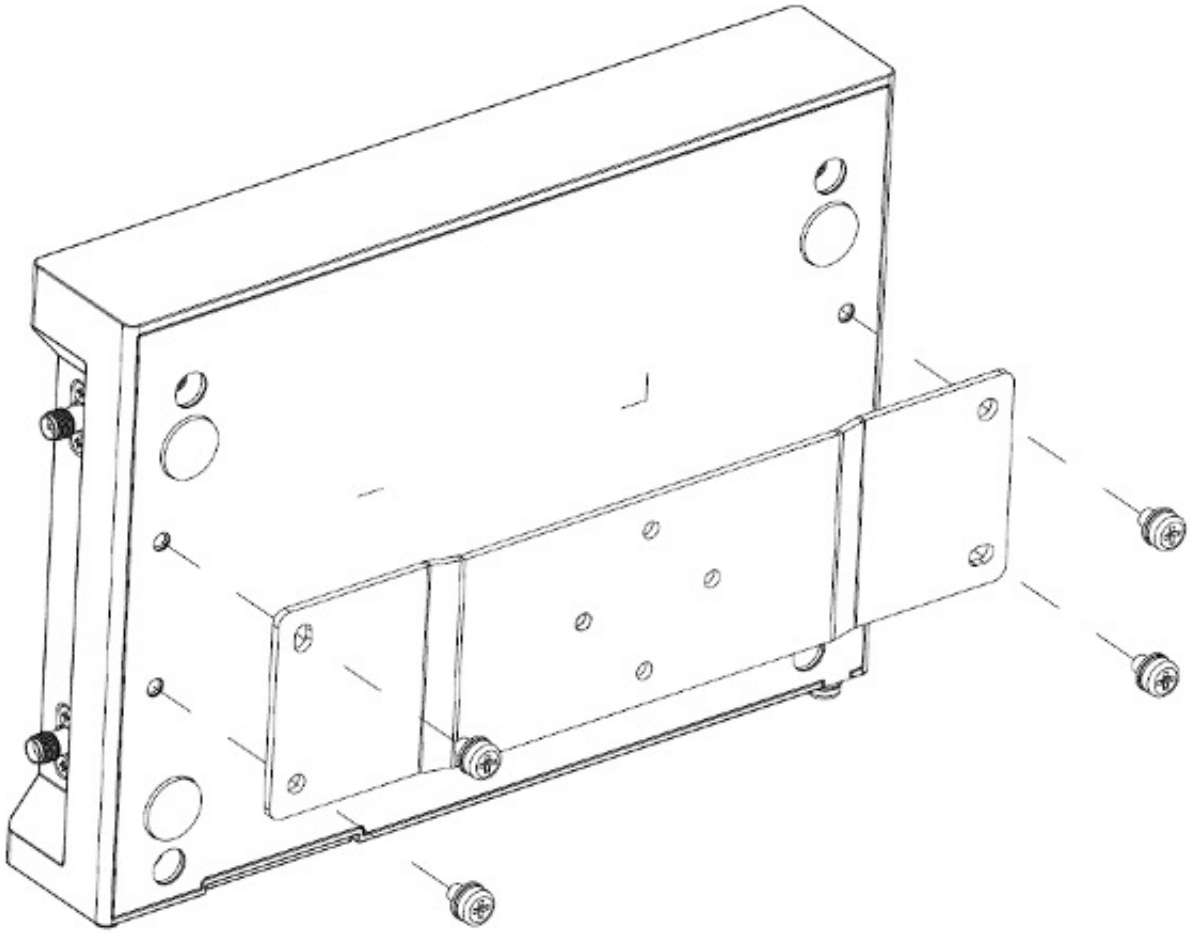

Attaching the DIN Rail Bracket to Support Vertical Mounting

After you attach the DIN Rail (as shown in Figure 3), do the following:

1. Position the bracket over the four mounting holes as shown in Figure 3.
2. Attach the Adapter plate to the back of the IG21R or IG31R using the four screws provided and applying 13-15 inch-pound torque. The screw thread diameter is 4.0 mm, the screw head diameter is 8.0 mm, and the screw length is 4.7 mm.
3. Attach the Din Rail Bracket using two screws as shown in Figure 3. The screw thread diameter is 3.0 mm, the screw head diameter is 5.5 mm, and the screw length is 7.0 mm.

Figure 3 Attaching the DIN Rail Bracket for Vertical Installation of IG21R or IG31R

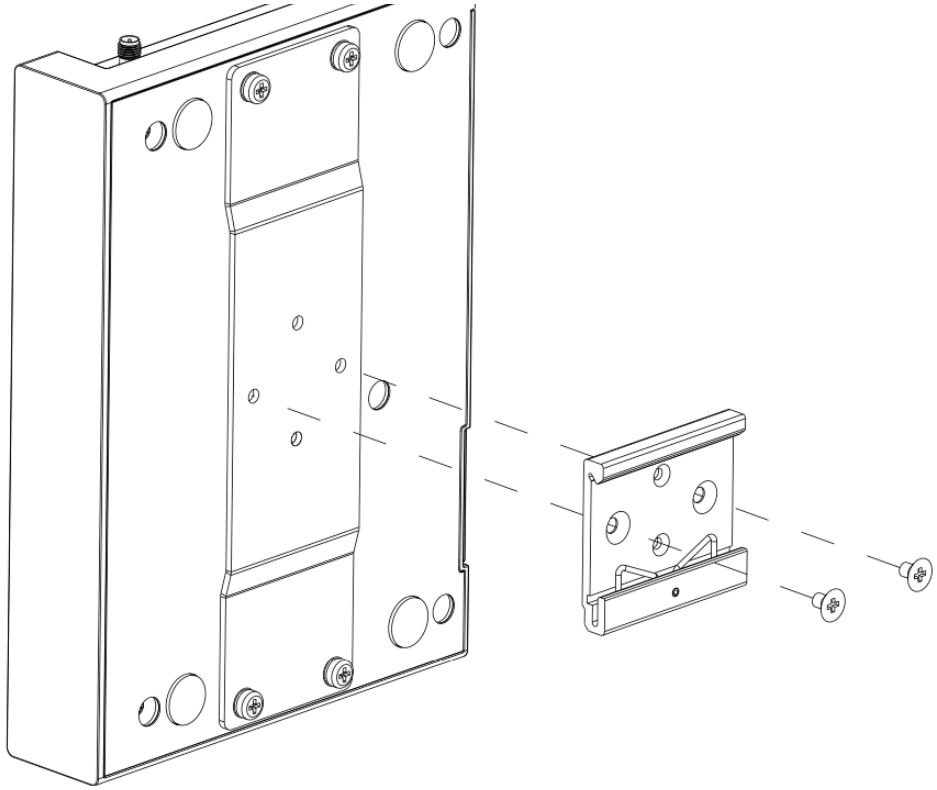

Attaching the DIN Rail Bracket to Support Horizontal Mounting

After you attach the Adapter plate as detailed in the Attaching the Adapter Plate for IG21R and IG31R, page 4 section and shown in Figure 4, do the following:

1. Position the DIN rail bracket over the four mounting holes as shown in the left illustration in Figure 4. You will attach the bracket using only the two horizontal holes.
2. Attach the Adapter plate by using the two screws (13-15 torque) supplied and apply 13-15 inch-pound torque to tighten the plate to the router. The screw thread diameter is 3.0 mm, the screw head diameter is 5.5 mm, and the screw length is 7.0 mm.

Figure 4 Attach the DIN Rail Bracket for Horizontal Installations for IG21R or IG31R

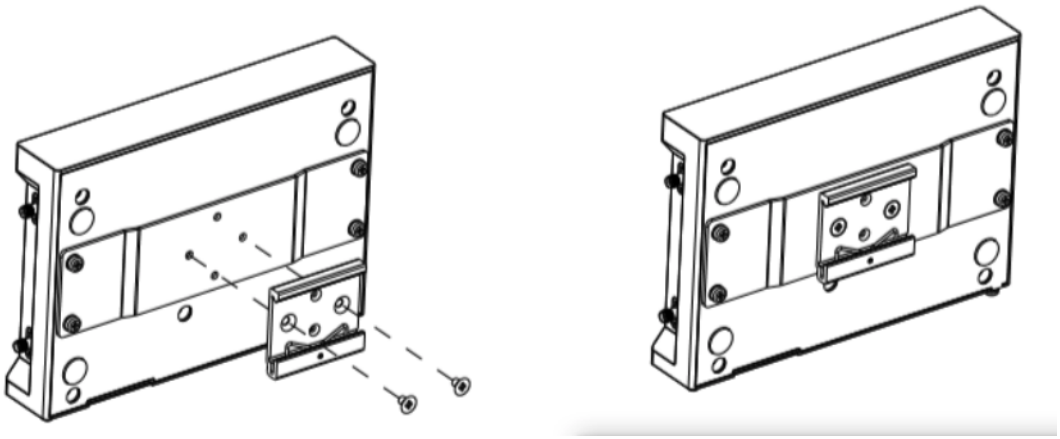

Mounting the Router on a Wall Using Mounting Brackets

The IG21, IG21R or IG31R can be mounted on a wall using the two molded brackets and screws shipped with the router. These brackets are attached to the bottom of the router (Figure 5 and Figure 6).

The screw thread diameter is 4.0 mm, the screw head diameter is 8.0 mm, and the screw length is 4.7 mm.

CAUTION: If you are mounting the router on drywall, use four hollow wall anchors to secure the unit to the wall using the four screws included in the kit.

1. Measure the horizontal distance between the two sets of holes on the mounting brackets and the vertical height of the router to determine placement on the wall. Mark the location of on the wall where the mounting screws will be anchored.
2. Use a drill bit that matches the size of the hollow wall anchors and screw.
3. Attach the IG21 to the wall ensuring the front panel as seen in Figure 10 faces upward.

Day Zero Default Configuration

By default, the radio of the IG21 is turned on. The radio automatically scans to identify and select the least utilized frequency channels.

Figure 5 Wall Mounting Bracket for IG21 Using 4 Screws

Figure 6 IIG Wall Mounting Bracket

Mounting the Router on a Wall Using Two KeyHoles

CAUTION: If you are mounting the router on drywall, use two hollow wall anchors to secure the unit to the wall using the two screws included in the kit.

1. The distance between the two hollow wall anchors should be 120 mm to match the distance between the two keyholes on the back of the router. (Figure 7).
2. Reserve a minimum of 4.5 mm distance between the screw heads and the wall (Figure 8). The screw head diameter is 9.8 mm, the screw head thickness is 1.5 mm, the screw thread diameter is 4.0 mm and the screw length is 16.0 mm.

Figure 7 Back of Router Showing Two Keyholes for Mounting at 120 mm

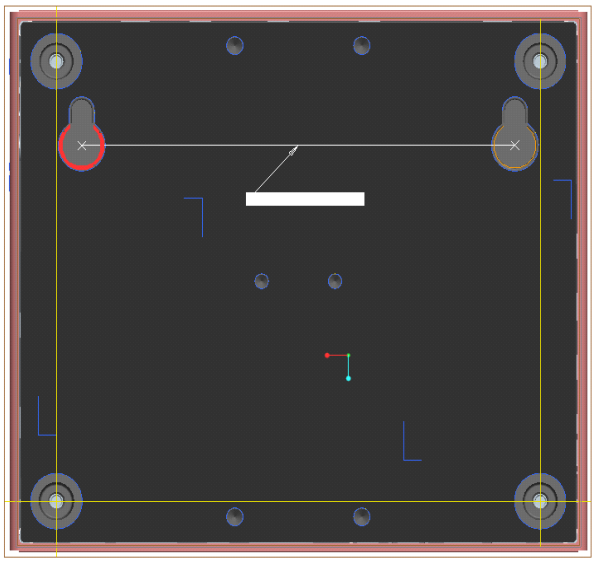

Figure 8 Measurements for Attaching Two Screw for Keyhole Mounting to Wall

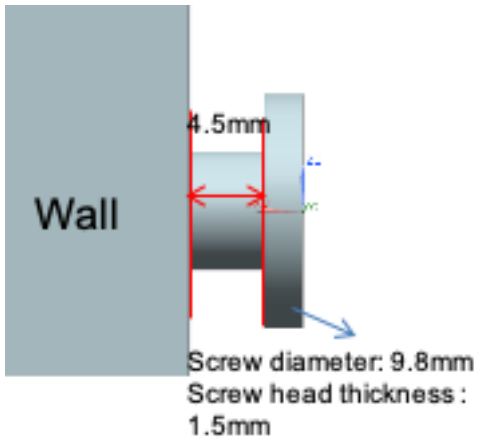

3. To attach the router to the wall, place the two keyholes on the back of the unit over the two screws mounted on the wall. Then, pull the router downward so that the router hangs from the screws (Figure 9).

Figure 9 Place the Router of the Two Key Holes and the Mounting

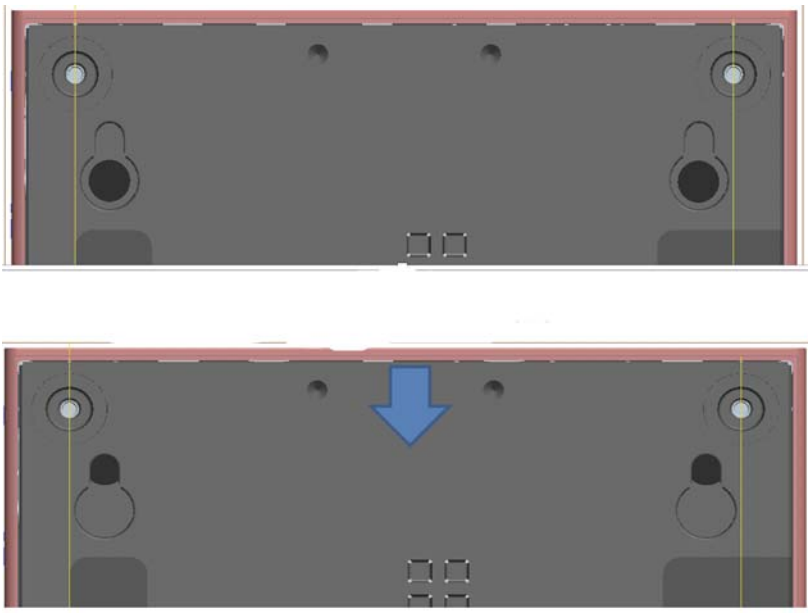

Front Panel and LED Definition

Figure 10 IoT Gateway IG21 Front Panel

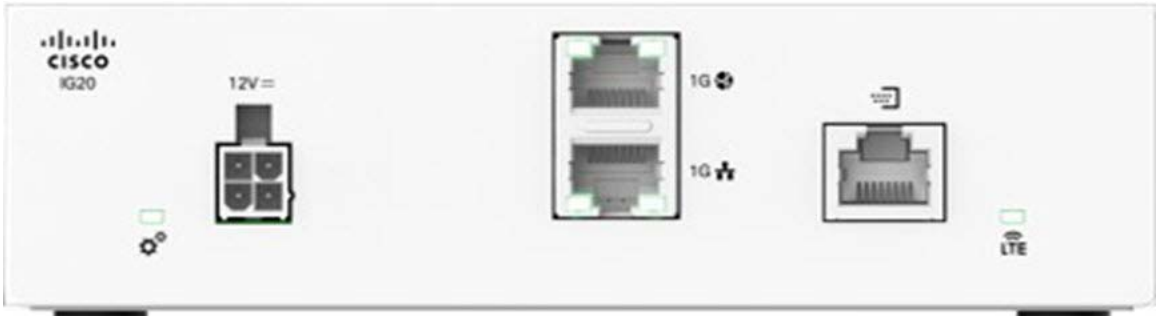

Figure 11 IG21 Front and Side View with 12v and USB Connector

Table 2 IG21 Front Panel Components (left to right)

Item	Description
LED	Indicates whether system is on or off.
12V=	12V connector for power input only
1G	Two Gigabit Ethernet ports: LAN (top port) and WAN port (bottom port)
Serial port icon	Serial port
LTE	Cellular connectivity (green indicates connectivity)

Table 3 Feature Set for IG21

Feature	Supported
Software Subscription	Yes
LTE	Yes - Category 1
Gigabit Ethernet LAN and WAN port (Quantity of 2)	Yes
Serial RS232	Yes
WiFi	Yes (IG21-xx-B-K9, IG21-xx-E-K9
USB	No
IP30 rating	No
CAN bus	No

Table 3 Feature Set for IG21

2 GPIO	No
Ignition Power Management	No
Operating Temperature	0C to 40C

Table 4 LED States on the IoT Gateway (IG21) <LED Assignment and Definitions Below May Change>

LED No	LED Name	Description	Status	Customer Action
LED 1	System Status RGA LED	Normal system operating status	Green	-------
		System is starting up or power cycling and loading system software, including BIOS and operating system	Flashing Amber	-------
		System receiving power but there is an error condition	Amber	Power cycle the device and then press factory reset
		System failure, RMA	Red	Persistent Red - RMA
		System not receiving power	Off	Persistent Off - RMA
LED 2	Cloud Status LED	Not connected to Cloud, Network issue, NMS (Kinetic) is down, PnP issue	Off	(Before Shipping) MFG to verify configuration that you can ping to PNP and Kinetic server.
		Operating status (Fully provisioned)	Green	---
		Gateway is trying to connect to Cloud	Flashing Green	---
LED 3	Cellular LED	No SIM, SIM not properly inserted, No Signal, SIM not activated, Data Plan not assigned	Off	---
		Online and Attached, Cellular Signal Weak (RSSI > 90dBi)	Flashing Green	---
		Online and Attached, Cellular Signal Good (RSSI < 90dBi)	Green	---

IG21R and IG31R Overview

Table 5 Feature Set for IG21R and IG31R in Figure 12

Feature	**Supported**
Software Subscription	Yes
IG21R and IG31R power input is a nominal 12 or 24VDC (DUT) with a rated maximum range of 9-36VDC (no AC option).	Yes
LTE	Yes - Category 4
Gigabit Ethernet LAN and WAN port (Quantity of 2)	Yes
Serial port RS232 or RS232/RS485	Yes
WiFi client/WGB: -B region for US/Canada and -E region for Europe	Yes (IG31R-xx-y-K9 or IG31R-xx-B-K9 or IG31R-xx-E-K9))
12 V or 24V connector for Digital I/O or Alarm In	Yes
USB (1)	Yes (front panel)
Antenna	Yes (IG21R and IG31R series external)

Table 5 Feature Set for IG21R and IG31R in Figure 12

IP30 rating	Yes (all PIDs)
CAN bus	IG31R only
2 GPIO	One (1) on IG21R and Two (2) on IG31R
Ignition Power Management	Yes (IG31R)
Operating temperature	-20C to 60 C

Figure 12 IG21R Front and Side View

Table 6 Front and Side Panel (left to right)

Front Panel
Digital I/O connector
12/24V power input
USB port
1 WAN, 1 LAN Ethernet Port
1 Gigabit Ethernet Port
Side Panel
LTE

Figure 13 Rugged IoT Gateway IG31R

Table 7 Front and Side Panel (left to right)

Front Panel
Digital I/O connector
12/24V power input
USB port
1 Gigabit Ethernet Port
1 WAN, 1 LAN Ethernet Port
CAN bus
Door panel (far right): Provides access to a reset button, SIM slot 0 and SIM slot 1
Side Panel
LTE port
WiFi port

FCC and ISED Interference Statement

This equipment has been tested and found to comply with the limits for a Class A digital device, pursuant to part 15 of the FCC Rules. These limits are designed to provide reasonable protection against harmful interference when the equipment is operated in a commercial environment. This equipment generates, uses, and can radiate radio frequency energy and, if not installed and used in accordance with the instruction manual, may cause harmful interference to radio communications. Operation of this equipment in a residential area is likely to cause harmful interference in which case the user will be required to correct the interference at his own expense.

FCC Caution: Any changes or modifications not expressly approved by the party responsible for compliance could void the user's authority to operate this equipment.

This device complies with Part 15 of the FCC Rules. Operation is subject to the following two conditions: (1) This device may not cause harmful interference, and (2) this device must accept any interference received, including interference that may cause undesired operation.

This device and its antenna(s) must not be co-located or operating in conjunction with any other antenna or transmitter.

For product available in the USA/Canada market, only channel 1~11 can be operated. Selection of other channels is not possible.

IMPORTANT NOTE:

FCC Radiation Exposure Statement:

This equipment complies with FCC radiation exposure limits set forth for an uncontrolled environment. This equipment should be installed and operated with minimum distance 20cm between the radiator and your body.

This device contains licence-exempt transmitter(s)/receiver(s) that comply with Innovation, Science and Economic Development Canada’s licence-exempt RSS(s). Operation is subject to the following two conditions:

1. This device may not cause interference.
2. This device must accept any interference, including interference that may cause undesired operation of the device.

L’émetteur/récepteur exempt de licence contenu dans le présent appareil est conforme aux CNR d’Innovation, Sciences et Développement économique Canada applicables aux appareils radio exempts de licence. L’exploitation est autorisée aux deux conditions suivantes :

1. L’appareil ne doit pas produire de brouillage;
2. L’appareil doit accepter tout brouillage radioélectrique subi, même si le brouillage est susceptible d’en compromettre le fonctionnement.

This radio transmitter [IG21 IC: 2461N-IG21; IG31R IC: 2461N-IG31R] has been approved by Innovation, Science and Economic Development Canada to operate with the antenna types listed below, with the maximum permissible gain indicated. Antenna types not included in this list that have a gain greater than the maximum gain indicated for any type listed are strictly prohibited for use with this device.

Table 8 Radio Transmitter

Antenna type	Model Number	Antenna Gain (dBi)
Dipole	IG21	3.74
Dipole	IG31R	4

Le présent émetteur radio [IG21 IC: 2461N-IG21; IG31R IC: 2461N-IG31R] a été approuvé par Innovation, Sciences et Développement économique Canada pour fonctionner avec les types d'antenne énumérés ci-dessous et ayant un gain admissible maximal. Les types d'antenne non inclus dans cette liste, et dont le gain est supérieur au gain maximal indiqué pour tout type figurant sur la liste, sont strictement interdits pour l'exploitation de l'émetteur.

Table 9 Le présent émetteur radio

Antenna type	Model Number	Antenna Gain (dBi)
Dipole	IG21	3.74
Dipole	IG31R	4

IMPORTANT NOTE:

ISED Radiation Exposure Statement:

This equipment complies with ISED RSS-102 radiation exposure limits set forth for an uncontrolled environment. This equipment should be installed and operated with minimum distance 20cm between the radiator & your body.

Cet équipement est conforme aux limites d’exposition aux rayonnements ISED établies pour un environnement non contrôlé. Cet équipement doit être installé et utilisé avec un minimum de 20cm de distance entre la source de rayonnement et votre corps

The transmitter module may not be co-located with any other transmitter or antenna.

Le module émetteur peut ne pas être coïmplanté avec un autre émetteur ou antenne.

CAN ICES-3 (A)/NMB-3(A)

The Country Code Selection feature is disabled for products marketed in the US/Canada

For product available in the USA/Canada market, only channel 1~11 can be operated. Selection of other channels is not possible.

Pour les produits disponibles aux États-Unis / Canada du marché, seul le canal 1 à 11 peuvent être exploités. Sélection d'autres canaux n'est pas possible.