ViperCell™ Hardware Installation

Beta 0.1

November 1999

ViperCell Hardware Installation

Beta Release 0.1

© Copyright 1999 JetCell Incorporated. All rights reserved.

JetCell Confidential

The information contained in this document is the property of JetCell, Inc. Except as specifically authorized in writing by JetCell, the holder of this document shall keep the information contained herein confidential and protect it from disclosure and dissemination to third parties in whole or in part and use same for evaluation purposes only. Certtain inventions described herein may be the subject of pending U.S. and international patent applications.

This document, whether published or unpublished, is protected as a copyrighted work and may not be copied, adapted, displayed or modified without written consent of JetCell, Inc. Report infringements to *infringement@jetcell.com*.

The contents of this document are provided for information purposes only and are subject to modification by JetCell, Inc. without notice. No representation or warranty is made as to the completeness or accuracy of the information contained herein, including but not limited to information concerning the suitability or performance of the product or application, merchantability or fitness for any particular purpose.

The following are trademarks of JetCell, Inc.: GoIP, RAP, SmartCell, SureTrack, V7M, V7X, ViperBase, ViperCell, ViperWatch.

Table of Contents

ViperCell Hardware Installation

Installing ViperCell Hardware 1-1
Unpacking ViperCell 1-1
Choosing Where to Mount ViperCell 1-2
Mounting the Wall Bracket 1-2
Mounting the ViperCell to the Wall Bracket 1-3
Connecting ViperCell to the LAN 1-3
Connecting ViperCell to Power 1-4
ViperCell Self-test Sequence 1-4
Attaching the Faceplate 1-5
ViperCell Software Install 1-5

1 - ViperCell Hardware Installation

A complete ViperNet Installation requires the installation of four major components:

- The ViperCell combined GSM Radio and H.323 Endpoint hardware
- The ViperWatch Operations, Administration, and Maintenance (OA&M) software
- The ViperBase GSM-Enhanced H.323 Gatekeeper software
- The V7M Interworking software

This Installation and Commissioning (I&C) Guide describes how to install the ViperCell combined GSM Radio and H.323 Endpoint hardware. Installation of ViperWatch, ViperBase, and V7M software are each described in their own Installation and Commissioning Guide.

Before beginning the procedures described in this document please consult the ViperCell Pre-Installation Checklist to determine whether your site is ready to receive ViperCell hardware.

Installing ViperCell Hardware

Installing ViperCell hardware involves the following major steps:

- Mount the ViperCell bracket to the wall
- Attach the ViperCell hardware to the bracket
- Connect the ViperCell hardware to a 10 or 100 BaseT LAN
- Connect the ViperCell hardware to power and verify the self-test sequence
- Attach the decorative faceplate

Completion of Hardware Installation is followed by installation of the ViperWatch OA&M Software.

Unpacking ViperCell

Each ViperCell is shipped with the following:

- A ViperCell combined GSM Radio and H.323 Endpoint assembly
- An AC/DC power transformer that accepts a 110-220 VAC input, and produces a 12 VDC 5A output
- A country-specific power cord
- A bracket for mounting the ViperCell to a wall
- A decorative faceplate
- A package of screws used to attach the bracket and faceplate

If you have ordered the GPS option, this list is supplemented by the following two items:

- A GPS antenna assembly
- A GPS connecting cable

Report missing or damage items to JetCell, Inc. (E-Mail or Telephone number?)

Choosing Where to Mount ViperCell

Choosing where to install ViperCell is important:

- Avoid placing ViperCell in direct sunlight or in locations of extreme heat or cold: ViperCell operates from -5C to +45C.
- Put the ViperCell in an area free of obstructions that could interfere with the operation of the GSM radio components
- Place the ViperCell unit at least 10’ (3 M) from the floor

For additional help in choosing a location for your ViperCell combined GSM Radio & H.323 Endpoint, consult the ViperCell Pre-Installation Checklist.

Once a location has been chosen, it is necessary to install the wall bracket.

Mounting the Wall Bracket

The ViperCell wall bracket is attached to the wall using the four mounting holes.

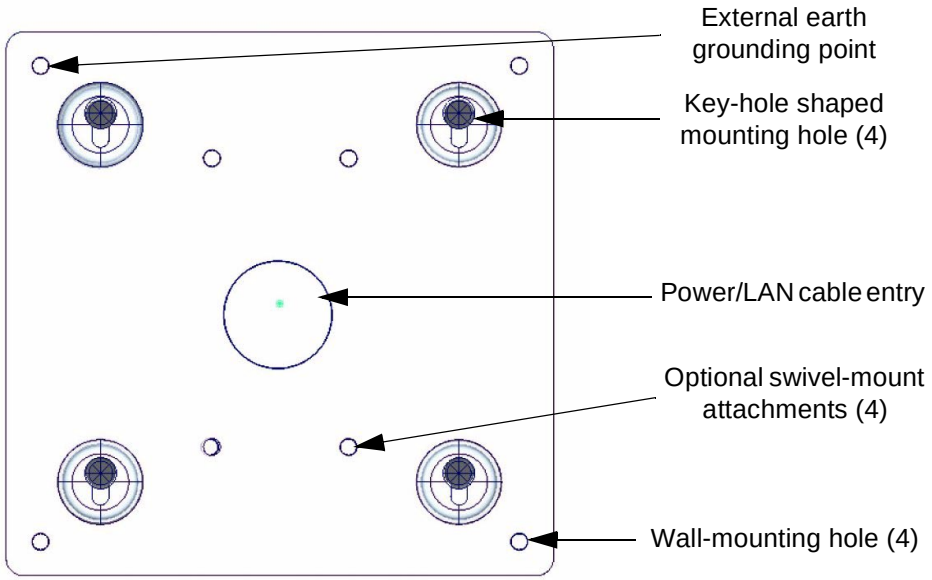

To mount the wall bracket:

1. Hold the bracket up to the wall so that the key-hole shaped holes in the bracket are positioned as shown.
2. Secure the bracket to the wall using all four wall-mounting holes.

Mounting the ViperCell to the Wall Bracket

Install the ViperCell into the wall bracket.

To attach the ViperCell to the wall bracket:

1. Position the ViperCell so that the LAN and power connectors are at the top of the unit.

WARNING!

Take care not to damage the flat antenna assemblies (not shown) attached to the front of the ViperCell unit.

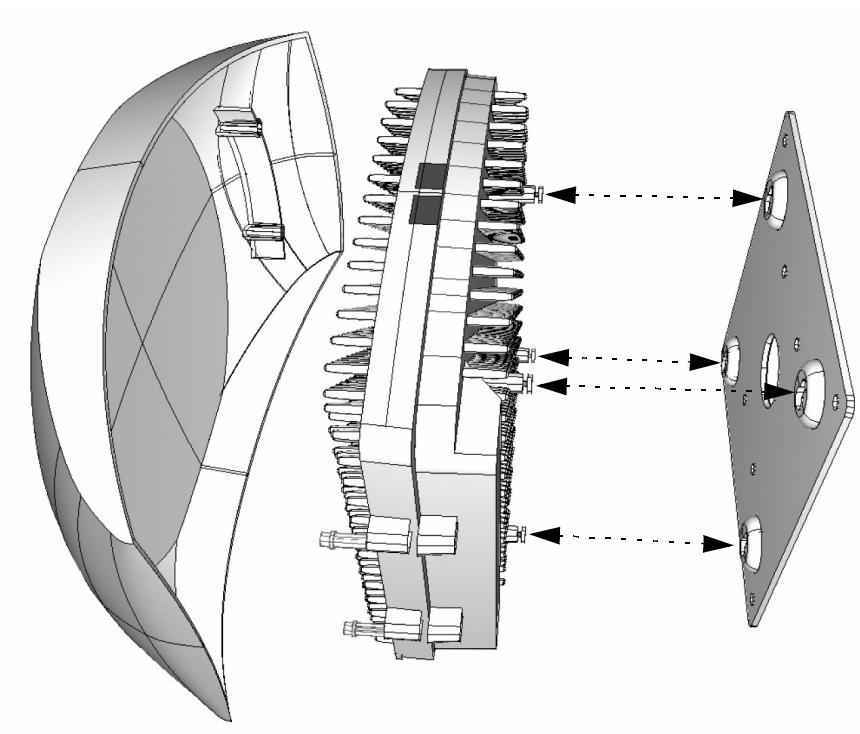

2. Insert the mounting studs on the back of the ViperCell unit with the key-hole shaped holes on the wall bracket.
3. Gently slide the ViperCell unit downward until the mounting pins rest securely at the bottom of the key-hole shaped mounting holes on the wall bracket.

Connecting ViperCell to the LAN

Connect ViperCell to a 10 or 100 BaseT LAN before applying power.To Connect ViperCell to a LAN insert the RJ-45 connector into the socket on the top of the ViperCell heatsink.

Connecting ViperCell to Power

WARNING!

Observe normal precautions for handling electronic equipment when attaching or removing power or lan connections to the ViperCell unit.

The ViperCell combined GSM Radio and H.323 Endpoint receives power from a power transformer that accepts 110 to 220 VAC 50/60 Hz input and produces 12VDC at 5A regulated output.

To connect power to the ViperCell:

1. Insert the DC power connector into the power connection on the top of the ViperCell.
2. Connect the AC power connection to a standard 110-200 VAC 50/60 Hz power source.

   When power is connected, the ViperCell self-test sequence begins.

ViperCell Self-test Sequence

When power is initially applied, ViperCell performs a self-test. During self-test the 7 LED's at the bottom of the ViperCell unit flash in a sequential pattern.

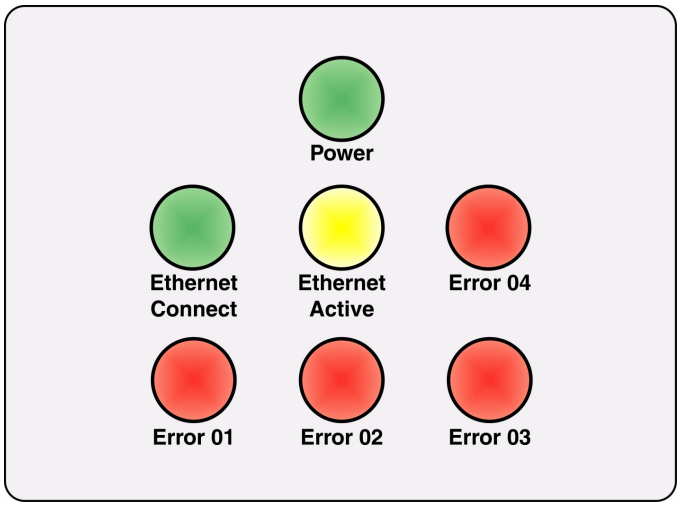

The ViperCell LED's are identified here. (The LED's on the ViperCell heatsink are not labelled).

At the completion of self-test the LED's stabilize:

- The green **Power LED** remains illuminated
- The green **Ethernet Connect** LED is illuminated
- The yellow **Ethernet Active** LED flashes whenever ViperCell is communicating across the 100MB BaseT LAN
- The red **Error LED**'s are extinguished

If the self-test sequence fails to complete, or if the red Error LED's are illuminated contact JetCell, Inc.

Attaching the Faceplate

After all other steps have been completed, install the decorative faceplate on the ViperCell unit.

WARNING!

Never use the decorative faceplate as a handle. Damage to the ViperCell unit will occur.

Never use the plastic faceplate as a handle: it is not designed to support the weight of the ViperCell hardware.

To attach the ViperCell faceplate:

1 Position the Faceplate in front of the ViperCell.

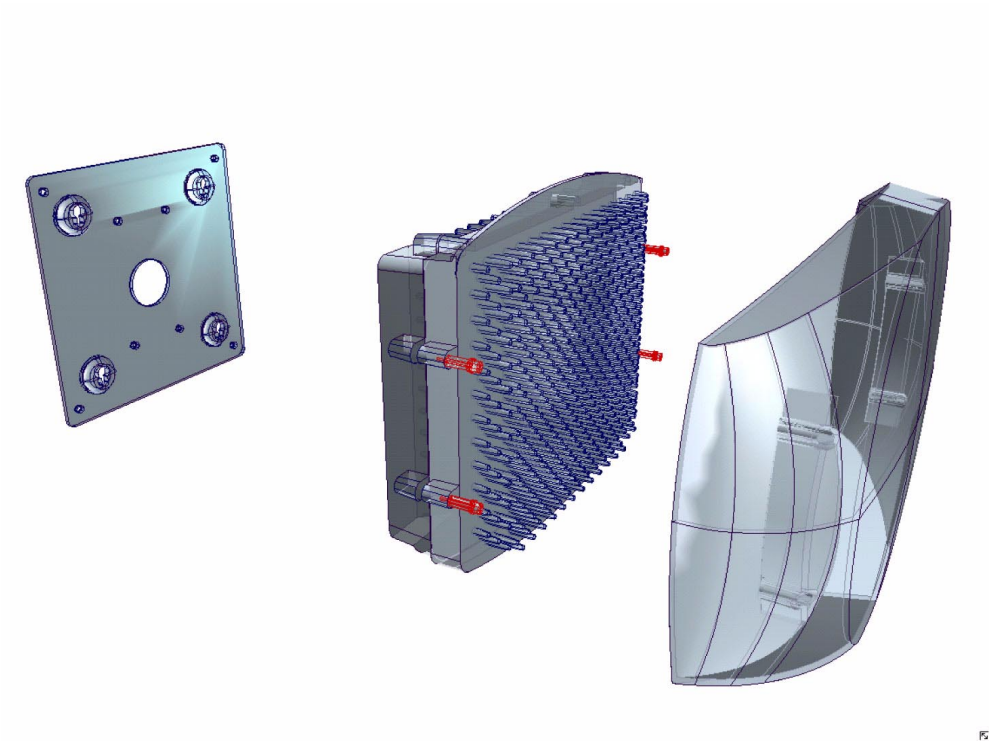

2 Gently press the Faceplate onto the ViperCell until the two clips snap into position on each side.

ViperCell Software Install

During Beta Trials, the ViperCell and ViperBase operating software will be installed by the JetCell, Inc. Beta Support team.