BW	MCS Index	RB	RB Size	RB Offset	Low CH 647668 Frequency 3715MHz	Mid CH 656000 Frequency 3840MHz	High CH 664332 Frequency 3965MHz	Max. Tune-up (dBm)
30M	DFT-s-OFDM Pi/2 BPSK	Outer	1	0	23.74	23.68	23.47	24
			1	77	23.13	23.09	22.96	24
			2	0	23.70	23.63	23.47	24
			2	76	23.19	23.20	23.07	24
			75	0	23.22	23.13	23.01	24
		Inner	1	1	26.80	26.74	26.64	27
			1	76	26.42	26.24	26.20	27
			36	18	26.27	26.31	26.16	27
	DFT-s-OFDM QPSK	Outer	1	0	23.58	23.44	23.40	24
			1	77	23.01	23.00	22.96	24
			2	0	23.73	23.64	23.54	24
			2	76	23.20	23.14	23.07	24
			75	0	23.38	23.27	23.18	24
		Inner	1	1	26.64	26.51	26.41	27
			1	76	26.22	26.17	25.97	27
			36	18	26.38	26.23	26.14	27
	DFT-s-OFDM 16QAM	Outer	1	0	23.60	23.46	23.43	24
			1	77	23.14	23.04	22.98	24
			2	0	23.52	23.38	23.33	24
			2	76	23.01	22.92	22.99	24
			75	0	23.02	22.93	23.00	24
		Inner	1	1	26.54	26.52	26.41	27
			1	76	26.19	26.11	26.02	27
			36	18	26.04	26.05	26.02	27
	DFT-s-OFDM 64QAM	Outer	1	0	23.84	23.73	23.61	24
			1	77	23.31	23.26	23.14	24
			2	0	23.81	23.72	23.66	24
			2	76	23.42	23.28	23.16	24
			75	0	23.40	23.29	23.14	24
		Inner	1	1	26.67	26.58	26.46	27
			1	76	26.23	26.12	25.98	27
			36	18	26.17	26.09	26.06	27
	DFT-s-OFDM 256QAM	Outer	1	0	22.33	22.19	22.10	23
			1	77	21.86	21.84	21.75	23
			2	0	22.20	22.04	21.99	23
			2	76	21.94	21.93	21.74	23
			75	0	22.05	21.94	21.88	23
		Inner	1	1	25.58	25.50	25.38	26
			1	76	25.04	24.92	24.89	26
			36	18	25.18	25.06	24.84	26

BW	MCS Index	RB	RB Size	RB Offset	Low CH 648000 Frequency 3720MHz	Mid CH 656000 Frequency 3840MHz	High CH 664000 Frequency 3960MHz	Max. Tune-up (dBm)
40M	DFT-s-OFDM Pi/2 BPSK	Outer	1	0	23.76	23.62	23.52	24
			1	105	23.17	23.08	22.94	24
			2	0	23.73	23.64	23.50	24
			2	104	23.22	23.20	23.06	24
			100	0	23.24	23.13	23.01	24
		Inner	1	1	26.81	26.74	26.58	27
			1	104	26.43	26.29	26.17	27
			50	25	26.30	26.24	26.14	27
	DFT-s-OFDM QPSK	Outer	1	0	23.55	23.50	23.38	24
			1	105	23.07	23.03	22.98	24
			2	0	23.71	23.65	23.58	24
			2	104	23.21	23.17	23.00	24
			100	0	23.36	23.30	23.20	24
		Inner	1	1	26.65	26.51	26.42	27
			1	104	26.20	26.15	25.99	27
			50	25	26.36	26.26	26.18	27
	DFT-s-OFDM 16QAM	Outer	1	0	23.53	23.50	23.39	24
			1	105	23.17	23.03	23.02	24
			2	0	23.46	23.40	23.28	24
			2	104	23.05	22.96	22.98	24
			100	0	23.02	22.96	23.03	24
		Inner	1	1	26.53	26.52	26.38	27
			1	104	26.22	26.13	26.03	27
			50	25	26.11	26.01	26.04	27
	DFT-s-OFDM 64QAM	Outer	1	0	23.87	23.76	23.61	24
			1	105	23.34	23.19	23.12	24
			2	0	23.84	23.74	23.64	24
			2	104	23.39	23.34	23.10	24
			100	0	23.34	23.28	23.20	24
		Inner	1	1	26.65	26.54	26.47	27
			1	104	26.18	26.08	26.00	27
			50	25	26.15	26.12	26.01	27
	DFT-s-OFDM 256QAM	Outer	1	0	22.26	22.20	22.13	23
			1	105	21.90	21.86	21.69	23
			2	0	22.13	22.07	22.00	23
			2	104	21.93	21.89	21.72	23
			100	0	22.05	21.94	21.89	23
		Inner	1	1	25.58	25.50	25.36	26
			1	104	25.00	24.93	24.89	26
			50	25	25.11	25.09	24.87	26

BW	MCS Index	RB	RB Size	RB Offset	Low CH 648334 Frequency 3725MHz	Mid CH 656000 Frequency 3840MHz	High CH 663666 Frequency 3955MHz	Max. Tune-up (dBm)
50M	DFT-s-OFDM Pi/2 BPSK	Outer	1	0	23.75	23.63	23.48	24
			1	132	23.18	23.06	22.96	24
			2	0	23.69	23.60	23.51	24
			2	131	23.23	23.16	23.07	24
			128	0	23.18	23.17	22.97	24
		Inner	1	1	26.77	26.73	26.60	27
			1	131	26.42	26.26	26.18	27
			64	32	26.27	26.30	26.12	27
	DFT-s-OFDM QPSK	Outer	1	0	23.52	23.50	23.37	24
			1	132	23.07	22.98	23.02	24
			2	0	23.71	23.60	23.52	24
			2	131	23.19	23.20	23.02	24
			128	0	23.35	23.27	23.21	24
		Inner	1	1	26.68	26.54	26.39	27
			1	131	26.18	26.17	25.97	27
			64	32	26.41	26.26	26.16	27
	DFT-s-OFDM 16QAM	Outer	1	0	23.53	23.50	23.39	24
			1	132	23.13	23.03	22.96	24
			2	0	23.52	23.40	23.27	24
			2	131	23.01	22.98	22.98	24
			128	0	23.08	22.92	22.97	24
		Inner	1	1	26.56	26.49	26.45	27
			1	131	26.20	26.14	25.99	27
			64	32	26.05	26.02	26.05	27
	DFT-s-OFDM 64QAM	Outer	1	0	23.86	23.77	23.62	24
			1	132	23.31	23.22	23.08	24
			2	0	23.83	23.76	23.62	24
			2	131	23.39	23.29	23.12	24
			128	0	23.39	23.25	23.20	24
		Inner	1	1	26.66	26.53	26.51	27
			1	131	26.24	26.11	25.94	27
			64	32	26.16	26.06	26.01	27
	DFT-s-OFDM 256QAM	Outer	1	0	22.31	22.15	22.13	23
			1	132	21.92	21.84	21.72	23
			2	0	22.15	22.00	22.00	23
			2	131	21.95	21.86	21.79	23
			128	0	22.01	21.95	21.85	23
		Inner	1	1	25.62	25.45	25.36	26
			1	131	25.01	24.90	24.89	26
			64	32	25.18	25.09	24.84	26

BW	MCS Index	RB	RB Size	RB Offset	Low CH 648668 Frequency 3730MHz	Mid CH 656000 Frequency 3840MHz	High CH 663332 Frequency 3950MHz	Max. Tune-up (dBm)
60M	DFT-s-OFDM Pi/2 BPSK	Outer	1	0	23.74	23.68	23.47	24
			1	161	23.13	23.09	22.96	24
			2	0	23.70	23.63	23.47	24
			2	160	23.19	23.20	23.07	24
			162	0	23.22	23.13	23.01	24
		Inner	1	1	26.80	26.74	26.64	27
			1	160	26.42	26.24	26.20	27
			81	40	26.27	26.31	26.16	27
	DFT-s-OFDM QPSK	Outer	1	0	23.58	23.44	23.40	24
			1	161	23.01	23.00	22.96	24
			2	0	23.73	23.64	23.54	24
			2	160	23.20	23.14	23.07	24
			162	0	23.38	23.27	23.18	24
		Inner	1	1	26.64	26.51	26.41	27
			1	160	26.22	26.17	25.97	27
			81	40	26.38	26.23	26.14	27
	DFT-s-OFDM 16QAM	Outer	1	0	23.60	23.46	23.43	24
			1	161	23.14	23.04	22.98	24
			2	0	23.52	23.38	23.33	24
			2	160	23.01	22.92	22.99	24
			162	0	23.02	22.93	23.00	24
		Inner	1	1	26.54	26.52	26.41	27
			1	160	26.19	26.11	26.02	27
			81	40	26.04	26.05	26.02	27
	DFT-s-OFDM 64QAM	Outer	1	0	23.84	23.73	23.61	24
			1	161	23.31	23.26	23.14	24
			2	0	23.81	23.72	23.66	24
			2	160	23.42	23.28	23.16	24
			162	0	23.40	23.29	23.14	24
		Inner	1	1	26.67	26.58	26.46	27
			1	160	26.23	26.12	25.98	27
			81	40	26.17	26.09	26.06	27
	DFT-s-OFDM 256QAM	Outer	1	0	22.33	22.19	22.10	23
			1	161	21.86	21.84	21.75	23
			2	0	22.20	22.04	21.99	23
			2	160	21.94	21.93	21.74	23
			162	0	22.05	21.94	21.88	23
		Inner	1	1	25.58	25.50	25.38	26
			1	160	25.04	24.92	24.89	26
			81	40	25.18	25.06	24.84	26

BW	MCS Index	RB	RB Size	RB Offset	Low CH 649000 Frequency 3735MHz	Mid CH 656000 Frequency 3840MHz	High CH 663000 Frequency 3945MHz	Max. Tune-up (dBm)
70M	DFT-s-OFDM Pi/2 BPSK	Outer	1	0	23.77	23.64	23.51	24
			1	188	23.19	23.09	23.00	24
			2	0	23.68	23.65	23.48	24
			2	187	23.25	23.14	23.07	24
			180	0	23.20	23.10	23.00	24
		Inner	1	1	26.77	26.75	26.65	27
			1	187	26.43	26.29	26.20	27
			90	45	26.27	26.25	26.16	27
	DFT-s-OFDM QPSK	Outer	1	0	23.58	23.44	23.41	24
			1	188	23.01	23.02	22.99	24
			2	0	23.77	23.58	23.59	24
			2	187	23.17	23.18	23.03	24
			180	0	23.39	23.26	23.21	24
		Inner	1	1	26.68	26.52	26.38	27
			1	187	26.17	26.11	26.03	27
			90	45	26.42	26.29	26.12	27
	DFT-s-OFDM 16QAM	Outer	1	0	23.54	23.44	23.39	24
			1	188	23.16	23.05	23.01	24
			2	0	23.52	23.39	23.30	24
			2	187	23.00	22.92	22.98	24
			180	0	23.08	22.96	23.01	24
		Inner	1	1	26.59	26.52	26.38	27
			1	187	26.19	26.08	25.98	27
			90	45	26.10	26.06	26.03	27
	DFT-s-OFDM 64QAM	Outer	1	0	23.87	23.74	23.66	24
			1	188	23.36	23.26	23.10	24
			2	0	23.79	23.69	23.64	24
			2	187	23.41	23.30	23.15	24
			180	0	23.39	23.26	23.17	24
		Inner	1	1	26.65	26.53	26.50	27
			1	187	26.23	26.05	26.01	27
			90	45	26.15	26.10	26.02	27
	DFT-s-OFDM 256QAM	Outer	1	0	22.32	22.14	22.10	23
			1	188	21.88	21.83	21.75	23
			2	0	22.20	22.06	21.94	23
			2	187	21.95	21.86	21.78	23
			180	0	22.01	21.93	21.82	23
		Inner	1	1	25.58	25.50	25.35	26
			1	187	25.00	24.93	24.89	26
			90	45	25.17	25.06	24.88	26

BW	MCS Index	RB	RB Size	RB Offset	Low CH 649334 Frequency 3740MHz	Mid CH 656000 Frequency 3840MHz	High CH 662666 Frequency 3940MHz	Max. Tune-up (dBm)
80M	DFT-s-OFDM Pi/2 BPSK	Outer	1	0	23.75	23.63	23.48	24
			1	216	23.18	23.06	22.96	24
			2	0	23.69	23.60	23.51	24
			2	215	23.23	23.16	23.07	24
			216	0	23.18	23.17	22.97	24
		Inner	1	1	26.77	26.73	26.61	27
			1	215	26.37	26.26	26.23	27
			108	54	26.27	26.30	26.12	27
	DFT-s-OFDM QPSK	Outer	1	0	23.52	23.50	23.37	24
			1	216	23.07	22.98	23.02	24
			2	0	23.71	23.60	23.52	24
			2	215	23.19	23.20	23.02	24
			216	0	23.35	23.27	23.21	24
		Inner	1	1	26.64	26.52	26.38	27
			1	215	26.16	26.14	26.03	27
			108	54	26.35	26.29	26.14	27
	DFT-s-OFDM 16QAM	Outer	1	0	23.53	23.51	23.43	24
			1	216	23.15	23.06	22.95	24
			2	0	23.46	23.45	23.33	24
			2	215	23.02	22.95	22.96	24
			216	0	23.04	22.95	23.02	24
		Inner	1	1	26.56	26.49	26.45	27
			1	215	26.20	26.14	25.99	27
			108	54	26.05	26.02	26.05	27
	DFT-s-OFDM 64QAM	Outer	1	0	23.80	23.77	23.67	24
			1	216	23.35	23.22	23.08	24
			2	0	23.78	23.76	23.68	24
			2	215	23.39	23.31	23.13	24
			216	0	23.39	23.25	23.21	24
		Inner	1	1	26.63	26.57	26.47	27
			1	215	26.22	26.07	26.00	27
			108	54	26.21	26.07	26.02	27
	DFT-s-OFDM 256QAM	Outer	1	0	22.28	22.13	22.13	23
			1	216	21.93	21.89	21.69	23
			2	0	22.16	22.00	21.96	23
			2	215	21.96	21.88	21.78	23
			216	0	22.04	21.97	21.83	23
		Inner	1	1	25.62	25.44	25.40	26
			1	215	24.99	24.94	24.86	26
			108	54	25.17	25.03	24.91	26

BW	MCS Index	RB	RB Size	RB Offset	Low CH 649668 Frequency 3745MHz	Mid CH 656000 Frequency 3840MHz	High CH 662332 Frequency 3935MHz	Max. Tune-up (dBm)
90M	DFT-s-OFDM Pi/2 BPSK	Outer	1	0	23.79	23.66	23.45	24
			1	244	23.16	23.11	22.97	24
			2	0	23.72	23.67	23.48	24
			2	243	23.21	23.16	23.11	24
			240	0	23.25	23.16	22.97	24
		Inner	1	1	26.75	26.76	26.61	27
			1	243	26.42	26.23	26.24	27
			120	60	26.27	26.28	26.13	27
	DFT-s-OFDM QPSK	Outer	1	0	23.56	23.47	23.40	24
			1	244	23.03	23.04	23.01	24
			2	0	23.77	23.58	23.59	24
			2	243	23.17	23.18	23.03	24
			240	0	23.39	23.26	23.21	24
		Inner	1	1	26.69	26.54	26.35	27
			1	243	26.17	26.16	26.01	27
			120	60	26.41	26.24	26.15	27
	DFT-s-OFDM 16QAM	Outer	1	0	23.55	23.44	23.43	24
			1	244	23.18	23.09	22.95	24
			2	0	23.47	23.38	23.29	24
			2	243	23.04	22.99	22.96	24
			240	0	23.08	22.93	23.04	24
		Inner	1	1	26.52	26.47	26.44	27
			1	243	26.25	26.12	26.01	27
			120	60	26.09	26.06	26.01	27
	DFT-s-OFDM 64QAM	Outer	1	0	23.85	23.72	23.67	24
			1	244	23.37	23.20	23.11	24
			2	0	23.80	23.69	23.68	24
			2	243	23.43	23.34	23.09	24
			240	0	23.34	23.25	23.16	24
		Inner	1	1	26.68	26.55	26.50	27
			1	243	26.23	26.06	25.97	27
			120	60	26.17	26.06	26.05	27
	DFT-s-OFDM 256QAM	Outer	1	0	22.32	22.13	22.14	23
			1	244	21.86	21.87	21.72	23
			2	0	22.19	22.00	22.01	23
			2	243	21.89	21.90	21.75	23
			240	0	22.06	21.93	21.88	23
		Inner	1	1	25.62	25.45	25.36	26
			1	243	25.01	24.90	24.89	26
			120	60	25.18	25.09	24.84	26

BW	MCS Index	RB	RB Size	RB Offset	Low CH 650000 Frequency 3750MHz	Mid CH 656000 Frequency 3840MHz	High CH 662000 Frequency 3930MHz	Max. Tune-up (dBm)
100M	DFT-s-OFDM Pi/2 BPSK	Outer	1	0	23.80	23.70	23.53	24
			1	272	23.20	23.14	22.98	24
			2	0	23.74	23.68	23.52	24
			2	271	23.27	23.21	23.12	24
			270	0	23.26	23.18	23.02	24
		Inner	1	1	26.83	26.80	26.66	27
			1	271	26.44	26.31	26.25	27
			135	67	26.35	26.32	26.18	27
	DFT-s-OFDM QPSK	Outer	1	0	23.60	23.52	23.42	24
			1	272	23.09	23.06	23.04	24
			2	0	23.79	23.66	23.60	24
			2	271	23.25	23.22	23.08	24
			270	0	23.42	23.32	23.23	24
		Inner	1	1	26.70	26.59	26.43	27
			1	271	26.23	26.19	26.05	27
			135	67	26.43	26.31	26.20	27
	DFT-s-OFDM 16QAM	Outer	1	0	23.61	23.52	23.45	24
			1	272	23.19	23.11	23.03	24
			2	0	23.54	23.46	23.35	24
			2	271	23.06	23.00	23.00	24
			270	0	23.10	22.97	23.05	24
		Inner	1	1	26.60	26.54	26.46	27
			1	271	26.26	26.16	26.04	27
			135	67	26.12	26.07	26.07	27
	DFT-s-OFDM 64QAM	Outer	1	0	23.88	23.78	23.69	24
			1	272	23.39	23.27	23.16	24
			2	0	23.86	23.77	23.70	24
			2	271	23.44	23.36	23.17	24
			270	0	23.41	23.33	23.22	24
		Inner	1	1	26.71	26.61	26.52	27
			1	271	26.25	26.13	26.02	27
			135	67	26.23	26.14	26.07	27
	DFT-s-OFDM 256QAM	Outer	1	0	22.34	22.21	22.15	23
			1	272	21.94	21.91	21.77	23
			2	0	22.21	22.08	22.02	23
			2	271	21.97	21.94	21.80	23
			270	0	22.09	21.99	21.90	23
		Inner	1	1	25.64	25.52	25.41	26
			1	271	25.07	24.98	24.91	26
			135	67	25.19	25.11	24.92	26

EIRP

N41

CHANNEL BANDWIDTH: 20MHz Pi/2 BPSK

Channel	Frequency (MHz)	Conducted Power (dBm)	G_T-L_C (dB)	EIRP (dBm)	EIRP (mW)	Limit (W)
501204	2506.02	23.78	1.69	25.47	352.37	2
518598	2592.99	23.65	1.69	25.34	341.98	2
535998	2679.99	23.67	1.69	25.36	343.56	2

CHANNEL BANDWIDTH: 20MHz QPSK

Channel	Frequency (MHz)	Conducted Power (dBm)	G_T-L_C (dB)	EIRP (dBm)	EIRP (mW)	Limit (W)
501204	2506.02	23.76	1.69	25.45	350.75	2
518598	2592.99	23.67	1.69	25.36	343.56	2
535998	2679.99	23.61	1.69	25.3	338.84	2

CHANNEL BANDWIDTH: 20MHz 16QAM

Channel	Frequency (MHz)	Conducted Power (dBm)	G_T-L_C (dB)	EIRP (dBm)	EIRP (mW)	Limit (W)
501204	2506.02	22.8	1.69	24.49	281.19	2
518598	2592.99	22.76	1.69	24.45	278.61	2
535998	2679.99	22.75	1.69	24.44	277.97	2

CHANNEL BANDWIDTH: 20MHz 64QAM

Channel	Frequency (MHz)	Conducted Power (dBm)	G_T-L_C (dB)	EIRP (dBm)	EIRP (mW)	Limit (W)
501204	2506.02	21.33	1.69	23.02	200.45	2
518598	2592.99	21.26	1.69	22.95	197.24	2
535998	2679.99	21.23	1.69	22.92	195.88	2

CHANNEL BANDWIDTH: 20MHz 256QAM

Channel	Frequency (MHz)	Conducted Power (dBm)	G_T-L_C (dB)	EIRP (dBm)	EIRP (mW)	Limit (W)
501204	2506.02	20.88	1.69	22.57	180.72	2
518598	2592.99	20.84	1.69	22.53	179.06	2
535998	2679.99	20.83	1.69	22.52	178.65	2

CHANNEL BANDWIDTH: 30MHz Pi/2 BPSK

Channel	Frequency (MHz)	Conducted Power (dBm)	G_T-L_C (dB)	EIRP (dBm)	EIRP (mW)	Limit (W)
502200	2511	23.74	1.69	25.43	349.14	2
518598	2592.99	23.64	1.69	25.33	341.19	2
534996	2674.98	23.7	1.69	25.39	345.94	2

CHANNEL BANDWIDTH: 30MHz QPSK

Channel	Frequency (MHz)	Conducted Power (dBm)	G_T-L_C (dB)	EIRP (dBm)	EIRP (mW)	Limit (W)
502200	2511	23.71	1.69	25.4	346.74	2
518598	2592.99	23.67	1.69	25.36	343.56	2
534996	2674.98	23.64	1.69	25.33	341.19	2

CHANNEL BANDWIDTH: 30MHz 16QAM

Channel	Frequency (MHz)	Conducted Power (dBm)	G_T-L_C (dB)	EIRP (dBm)	EIRP (mW)	Limit (W)
502200	2511	22.85	1.69	24.54	284.45	2
518598	2592.99	22.74	1.69	24.43	277.33	2
534996	2674.98	22.78	1.69	24.47	279.9	2

CHANNEL BANDWIDTH: 30MHz 64QAM

Channel	Frequency (MHz)	Conducted Power (dBm)	G_T-L_C (dB)	EIRP (dBm)	EIRP (mW)	Limit (W)
502200	2511	21.33	1.69	23.02	200.45	2
518598	2592.99	21.26	1.69	22.95	197.24	2
534996	2674.98	21.23	1.69	22.92	195.88	2

CHANNEL BANDWIDTH: 30MHz 256QAM

Channel	Frequency (MHz)	Conducted Power (dBm)	G_T-L_C (dB)	EIRP (dBm)	EIRP (mW)	Limit (W)
502200	2511	20.88	1.69	22.57	180.72	2
518598	2592.99	20.84	1.69	22.53	179.06	2
534996	2674.98	20.83	1.69	22.52	178.65	2

CHANNEL BANDWIDTH: 40MHz Pi/2 BPSK

Channel	Frequency (MHz)	Conducted Power (dBm)	G_T-L_C (dB)	EIRP (dBm)	EIRP (mW)	Limit (W)
503202	2516.01	23.75	1.69	25.44	349.95	2
518598	2592.99	23.64	1.69	25.33	341.19	2
534000	2670	23.71	1.69	25.4	346.74	2

CHANNEL BANDWIDTH: 40MHz QPSK

Channel	Frequency (MHz)	Conducted Power (dBm)	G_T-L_C (dB)	EIRP (dBm)	EIRP (mW)	Limit (W)
503202	2516.01	23.7	1.69	25.39	345.94	2
518598	2592.99	23.67	1.69	25.36	343.56	2
534000	2670	23.61	1.69	25.3	338.84	2

CHANNEL BANDWIDTH: 40MHz 16QAM

Channel	Frequency (MHz)	Conducted Power (dBm)	G_T-L_C (dB)	EIRP (dBm)	EIRP (mW)	Limit (W)
503202	2516.01	22.86	1.69	24.55	285.1	2
518598	2592.99	22.74	1.69	24.43	277.33	2
534000	2670	22.72	1.69	24.41	276.06	2

CHANNEL BANDWIDTH: 40MHz 64QAM

Channel	Frequency (MHz)	Conducted Power (dBm)	G_T-L_C (dB)	EIRP (dBm)	EIRP (mW)	Limit (W)
503202	2516.01	21.31	1.69	23	199.53	2
518598	2592.99	21.22	1.69	22.91	195.43	2
534000	2670	21.24	1.69	22.93	196.34	2

CHANNEL BANDWIDTH: 40MHz 256QAM

Channel	Frequency (MHz)	Conducted Power (dBm)	G_T-L_C (dB)	EIRP (dBm)	EIRP (mW)	Limit (W)
503202	2516.01	20.88	1.69	22.57	180.72	2
518598	2592.99	20.84	1.69	22.53	179.06	2
534000	2670	20.81	1.69	22.5	177.83	2

CHANNEL BANDWIDTH: 50MHz Pi/2 BPSK

Channel	Frequency (MHz)	Conducted Power (dBm)	G_T-L_C (dB)	EIRP (dBm)	EIRP (mW)	Limit (W)
504204	2521.02	23.78	1.69	25.47	352.37	2
518598	2592.99	23.67	1.69	25.36	343.56	2
532998	2664.99	23.68	1.69	25.37	344.35	2

CHANNEL BANDWIDTH: 50MHz QPSK

Channel	Frequency (MHz)	Conducted Power (dBm)	G_T-L_C (dB)	EIRP (dBm)	EIRP (mW)	Limit (W)
504204	2521.02	23.73	1.69	25.42	348.34	2
518598	2592.99	23.64	1.69	25.33	341.19	2
532998	2664.99	23.68	1.69	25.37	344.35	2

CHANNEL BANDWIDTH: 50MHz 16QAM

Channel	Frequency (MHz)	Conducted Power (dBm)	G_T-L_C (dB)	EIRP (dBm)	EIRP (mW)	Limit (W)
504204	2521.02	22.82	1.69	24.51	282.49	2
518598	2592.99	22.73	1.69	24.42	276.69	2
532998	2664.99	22.74	1.69	24.43	277.33	2

CHANNEL BANDWIDTH: 50MHz 64QAM

Channel	Frequency (MHz)	Conducted Power (dBm)	G_T-L_C (dB)	EIRP (dBm)	EIRP (mW)	Limit (W)
504204	2521.02	21.32	1.69	23.01	199.99	2
518598	2592.99	21.21	1.69	22.9	194.98	2
532998	2664.99	21.28	1.69	22.97	198.15	2

CHANNEL BANDWIDTH: 50MHz 256QAM

Channel	Frequency (MHz)	Conducted Power (dBm)	G_T-L_C (dB)	EIRP (dBm)	EIRP (mW)	Limit (W)
504204	2521.02	20.92	1.69	22.61	182.39	2
518598	2592.99	20.79	1.69	22.48	177.01	2
532998	2664.99	20.81	1.69	22.5	177.83	2

CHANNEL BANDWIDTH: 60MHz Pi/2 BPSK

Channel	Frequency (MHz)	Conducted Power (dBm)	G_T-L_C (dB)	EIRP (dBm)	EIRP (mW)	Limit (W)
505200	2526	23.74	1.69	25.43	349.14	2
518598	2592.99	23.64	1.69	25.33	341.19	2
531996	2659.98	23.7	1.69	25.39	345.94	2

CHANNEL BANDWIDTH: 60MHz QPSK

Channel	Frequency (MHz)	Conducted Power (dBm)	G_T-L_C (dB)	EIRP (dBm)	EIRP (mW)	Limit (W)
505200	2526	23.71	1.69	25.4	346.74	2
518598	2592.99	23.67	1.69	25.36	343.56	2
531996	2659.98	23.64	1.69	25.33	341.19	2

CHANNEL BANDWIDTH: 60MHz 16QAM

Channel	Frequency (MHz)	Conducted Power (dBm)	G_T-L_C (dB)	EIRP (dBm)	EIRP (mW)	Limit (W)
505200	2526	22.85	1.69	24.54	284.45	2
518598	2592.99	22.74	1.69	24.43	277.33	2
531996	2659.98	22.78	1.69	24.47	279.9	2

CHANNEL BANDWIDTH: 60MHz 64QAM

Channel	Frequency (MHz)	Conducted Power (dBm)	G_T-L_C (dB)	EIRP (dBm)	EIRP (mW)	Limit (W)
505200	2526	21.33	1.69	23.02	200.45	2
518598	2592.99	21.26	1.69	22.95	197.24	2
531996	2659.98	21.23	1.69	22.92	195.88	2

CHANNEL BANDWIDTH: 60MHz 256QAM

Channel	Frequency (MHz)	Conducted Power (dBm)	G_T-L_C (dB)	EIRP (dBm)	EIRP (mW)	Limit (W)
505200	2526	20.88	1.69	22.57	180.72	2
518598	2592.99	20.84	1.69	22.53	179.06	2
531996	2659.98	20.83	1.69	22.52	178.65	2

CHANNEL BANDWIDTH: 80MHz Pi/2 BPSK

Channel	Frequency (MHz)	Conducted Power (dBm)	G_T-L_C (dB)	EIRP (dBm)	EIRP (mW)	Limit (W)
507204	2536.02	23.74	1.69	25.43	349.14	2
518598	2592.99	23.65	1.69	25.34	341.98	2
529998	2649.99	23.67	1.69	25.36	343.56	2

CHANNEL BANDWIDTH: 80MHz QPSK

Channel	Frequency (MHz)	Conducted Power (dBm)	G_T-L_C (dB)	EIRP (dBm)	EIRP (mW)	Limit (W)
507204	2536.02	23.73	1.69	25.42	348.34	2
518598	2592.99	23.64	1.69	25.33	341.19	2
529998	2649.99	23.68	1.69	25.37	344.35	2

CHANNEL BANDWIDTH: 80MHz 16QAM

Channel	Frequency (MHz)	Conducted Power (dBm)	G_T-L_C (dB)	EIRP (dBm)	EIRP (mW)	Limit (W)
507204	2536.02	22.82	1.69	24.51	282.49	2
518598	2592.99	22.73	1.69	24.42	276.69	2
529998	2649.99	22.75	1.69	24.44	277.97	2

CHANNEL BANDWIDTH: 80MHz 64QAM

Channel	Frequency (MHz)	Conducted Power (dBm)	G_T-L_C (dB)	EIRP (dBm)	EIRP (mW)	Limit (W)
507204	2536.02	21.29	1.69	22.98	198.61	2
518598	2592.99	21.25	1.69	22.94	196.79	2
529998	2649.99	21.24	1.69	22.93	196.34	2

CHANNEL BANDWIDTH: 80MHz 256QAM

Channel	Frequency (MHz)	Conducted Power (dBm)	G_T-L_C (dB)	EIRP (dBm)	EIRP (mW)	Limit (W)
507204	2536.02	20.92	1.69	22.61	182.39	2
518598	2592.99	20.78	1.69	22.47	176.6	2
529998	2649.99	20.85	1.69	22.54	179.47	2

CHANNEL BANDWIDTH: 90MHz Pi/2 BPSK

Channel	Frequency (MHz)	Conducted Power (dBm)	G_T-L_C (dB)	EIRP (dBm)	EIRP (mW)	Limit (W)
508200	2541	23.79	1.69	25.48	353.18	2
518598	2592.99	23.67	1.69	25.36	343.56	2
528996	2644.98	23.64	1.69	25.33	341.19	2

CHANNEL BANDWIDTH: 90MHz QPSK

Channel	Frequency (MHz)	Conducted Power (dBm)	G_T-L_C (dB)	EIRP (dBm)	EIRP (mW)	Limit (W)
508200	2541	23.69	1.69	25.38	345.14	2
518598	2592.99	23.62	1.69	25.31	339.63	2
528996	2644.98	23.67	1.69	25.36	343.56	2

CHANNEL BANDWIDTH: 90MHz 16QAM

Channel	Frequency (MHz)	Conducted Power (dBm)	G_T-L_C (dB)	EIRP (dBm)	EIRP (mW)	Limit (W)
508200	2541	22.8	1.69	24.49	281.19	2
518598	2592.99	22.76	1.69	24.45	278.61	2
528996	2644.98	22.75	1.69	24.44	277.97	2

CHANNEL BANDWIDTH: 90MHz 64QAM

Channel	Frequency (MHz)	Conducted Power (dBm)	G_T-L_C (dB)	EIRP (dBm)	EIRP (mW)	Limit (W)
508200	2541	21.34	1.69	23.03	200.91	2
518598	2592.99	21.23	1.69	22.92	195.88	2
528996	2644.98	21.27	1.69	22.96	197.7	2

CHANNEL BANDWIDTH: 90MHz 256QAM

Channel	Frequency (MHz)	Conducted Power (dBm)	G_T-L_C (dB)	EIRP (dBm)	EIRP (mW)	Limit (W)
508200	2541	20.92	1.69	22.61	182.39	2
518598	2592.99	20.79	1.69	22.48	177.01	2
528996	2644.98	20.81	1.69	22.5	177.83	2

CHANNEL BANDWIDTH: 100MHz Pi/2 BPSK

Channel	Frequency (MHz)	Conducted Power (dBm)	G_T-L_C (dB)	EIRP (dBm)	EIRP (mW)	Limit (W)
509202	2546.01	23.8	1.69	25.49	354.00	2
518598	2592.99	23.64	1.69	25.33	341.19	2
528000	2640	23.72	1.69	25.41	347.54	2

CHANNEL BANDWIDTH: 100MHz QPSK

Channel	Frequency (MHz)	Conducted Power (dBm)	G_T-L_C (dB)	EIRP (dBm)	EIRP (mW)	Limit (W)
509202	2546.01	23.77	1.69	25.46	351.56	2
518598	2592.99	23.68	1.69	25.37	344.35	2
528000	2640	23.69	1.69	25.38	345.14	2

CHANNEL BANDWIDTH: 100MHz 16QAM

Channel	Frequency (MHz)	Conducted Power (dBm)	G_T-L_C (dB)	EIRP (dBm)	EIRP (mW)	Limit (W)
509202	2546.01	22.88	1.69	24.57	286.42	2
518598	2592.99	22.72	1.69	24.41	276.06	2
528000	2640	22.8	1.69	24.49	281.19	2

CHANNEL BANDWIDTH: 100MHz 64QAM

Channel	Frequency (MHz)	Conducted Power (dBm)	G_T-L_C (dB)	EIRP (dBm)	EIRP (mW)	Limit (W)
509202	2546.01	21.37	1.69	23.06	202.3	2
518598	2592.99	21.26	1.69	22.95	197.24	2
528000	2640	21.29	1.69	22.98	198.61	2

CHANNEL BANDWIDTH: 100MHz 256QAM

Channel	Frequency (MHz)	Conducted Power (dBm)	G_T-L_C (dB)	EIRP (dBm)	EIRP (mW)	Limit (W)
509202	2546.01	20.94	1.69	22.63	183.23	2
518598	2592.99	20.84	1.69	22.53	179.06	2
528000	2640	20.86	1.69	22.55	179.89	2

REMARKS: ERP Output Power (dBm) = EIRP (dBm) -2.15(dB).

N41-HPUE

CHANNEL BANDWIDTH: 20MHz Pi/2 BPSK

Channel	Frequency (MHz)	Conducted Power (dBm)	G_T-L_C (dB)	EIRP (dBm)	EIRP (mW)	Limit (W)
501204	2506.02	26.2	1.69	27.89	615.18	2
518598	2592.99	26.37	1.69	28.06	639.73	2
535998	2679.99	26.34	1.69	28.03	635.33	2

CHANNEL BANDWIDTH: 20MHz QPSK

Channel	Frequency (MHz)	Conducted Power (dBm)	G_T-L_C (dB)	EIRP (dBm)	EIRP (mW)	Limit (W)
501204	2506.02	25.95	1.69	27.64	580.76	2
518598	2592.99	26.69	1.69	28.38	688.65	2
535998	2679.99	26.48	1.69	28.17	656.15	2

CHANNEL BANDWIDTH: 20MHz 16QAM

Channel	Frequency (MHz)	Conducted Power (dBm)	G_T-L_C (dB)	EIRP (dBm)	EIRP (mW)	Limit (W)
501204	2506.02	25.17	1.69	26.86	485.29	2
518598	2592.99	26	1.69	27.69	587.49	2
535998	2679.99	25.76	1.69	27.45	555.9	2

CHANNEL BANDWIDTH: 20MHz 64QAM

Channel	Frequency (MHz)	Conducted Power (dBm)	G_T-L_C (dB)	EIRP (dBm)	EIRP (mW)	Limit (W)
501204	2506.02	23.5	1.69	25.19	330.37	2
518598	2592.99	24.3	1.69	25.99	397.19	2
535998	2679.99	24.04	1.69	25.73	374.11	2

CHANNEL BANDWIDTH: 20MHz 256QAM

Channel	Frequency (MHz)	Conducted Power (dBm)	G_T-L_C (dB)	EIRP (dBm)	EIRP (mW)	Limit (W)
501204	2506.02	23.05	1.69	24.74	297.85	2
518598	2592.99	23.88	1.69	25.57	360.58	2
535998	2679.99	23.64	1.69	25.33	341.19	2

CHANNEL BANDWIDTH: 30MHz Pi/2 BPSK

Channel	Frequency (MHz)	Conducted Power (dBm)	G_T-L_C (dB)	EIRP (dBm)	EIRP (mW)	Limit (W)
502200	2511	26.15	1.69	27.84	608.14	2
518598	2592.99	26.4	1.69	28.09	644.17	2
534996	2674.98	26.38	1.69	28.07	641.21	2

CHANNEL BANDWIDTH: 30MHz QPSK

Channel	Frequency (MHz)	Conducted Power (dBm)	G_T-L_C (dB)	EIRP (dBm)	EIRP (mW)	Limit (W)
502200	2511	25.91	1.69	27.6	575.44	2
518598	2592.99	26.68	1.69	28.37	687.07	2
534996	2674.98	26.51	1.69	28.2	660.69	2

CHANNEL BANDWIDTH: 30MHz 16QAM

Channel	Frequency (MHz)	Conducted Power (dBm)	G_T-L_C (dB)	EIRP (dBm)	EIRP (mW)	Limit (W)
502200	2511	25.22	1.69	26.91	490.91	2
518598	2592.99	25.98	1.69	27.67	584.79	2
534996	2674.98	25.79	1.69	27.48	559.76	2

CHANNEL BANDWIDTH: 30MHz 64QAM

Channel	Frequency (MHz)	Conducted Power (dBm)	G_T-L_C (dB)	EIRP (dBm)	EIRP (mW)	Limit (W)
502200	2511	23.5	1.69	25.19	330.37	2
518598	2592.99	24.3	1.69	25.99	397.19	2
534996	2674.98	24.04	1.69	25.73	374.11	2

CHANNEL BANDWIDTH: 30MHz 256QAM

Channel	Frequency (MHz)	Conducted Power (dBm)	G_T-L_C (dB)	EIRP (dBm)	EIRP (mW)	Limit (W)
502200	2511	23.05	1.69	24.74	297.85	2
518598	2592.99	23.88	1.69	25.57	360.58	2
534996	2674.98	23.64	1.69	25.33	341.19	2

CHANNEL BANDWIDTH: 40MHz Pi/2 BPSK

Channel	Frequency (MHz)	Conducted Power (dBm)	G_T-L_C (dB)	EIRP (dBm)	EIRP (mW)	Limit (W)
503202	2516.01	26.14	1.69	27.83	606.74	2
518598	2592.99	26.42	1.69	28.11	647.14	2
534000	2670	26.39	1.69	28.08	642.69	2

CHANNEL BANDWIDTH: 40MHz QPSK

Channel	Frequency (MHz)	Conducted Power (dBm)	G_T-L_C (dB)	EIRP (dBm)	EIRP (mW)	Limit (W)
503202	2516.01	25.92	1.69	27.61	576.77	2
518598	2592.99	26.68	1.69	28.37	687.07	2
534000	2670	26.52	1.69	28.21	662.22	2

CHANNEL BANDWIDTH: 40MHz 16QAM

Channel	Frequency (MHz)	Conducted Power (dBm)	G_T-L_C (dB)	EIRP (dBm)	EIRP (mW)	Limit (W)
503202	2516.01	25.23	1.69	26.92	492.04	2
518598	2592.99	25.98	1.69	27.67	584.79	2
534000	2670	25.73	1.69	27.42	552.08	2

CHANNEL BANDWIDTH: 40MHz 64QAM

Channel	Frequency (MHz)	Conducted Power (dBm)	G_T-L_C (dB)	EIRP (dBm)	EIRP (mW)	Limit (W)
503202	2516.01	23.48	1.69	25.17	328.85	2
518598	2592.99	24.26	1.69	25.95	393.55	2
534000	2670	24.05	1.69	25.74	374.97	2

CHANNEL BANDWIDTH: 40MHz 256QAM

Channel	Frequency (MHz)	Conducted Power (dBm)	G_T-L_C (dB)	EIRP (dBm)	EIRP (mW)	Limit (W)
503202	2516.01	23.05	1.69	24.74	297.85	2
518598	2592.99	23.88	1.69	25.57	360.58	2
534000	2670	23.62	1.69	25.31	339.63	2

CHANNEL BANDWIDTH: 50MHz Pi/2 BPSK

Channel	Frequency (MHz)	Conducted Power (dBm)	G_T-L_C (dB)	EIRP (dBm)	EIRP (mW)	Limit (W)
504204	2521.02	26.17	1.69	27.86	610.94	2
518598	2592.99	26.43	1.69	28.12	648.63	2
532998	2664.99	26.35	1.69	28.04	636.80	2

CHANNEL BANDWIDTH: 50MHz QPSK

Channel	Frequency (MHz)	Conducted Power (dBm)	G_T-L_C (dB)	EIRP (dBm)	EIRP (mW)	Limit (W)
504204	2521.02	25.95	1.69	27.64	580.76	2
518598	2592.99	26.71	1.69	28.4	691.83	2
532998	2664.99	26.49	1.69	28.18	657.66	2

CHANNEL BANDWIDTH: 50MHz 16QAM

Channel	Frequency (MHz)	Conducted Power (dBm)	G_T-L_C (dB)	EIRP (dBm)	EIRP (mW)	Limit (W)
504204	2521.02	25.19	1.69	26.88	487.53	2
518598	2592.99	25.97	1.69	27.66	583.45	2
532998	2664.99	25.75	1.69	27.44	554.63	2

CHANNEL BANDWIDTH: 50MHz 64QAM

Channel	Frequency (MHz)	Conducted Power (dBm)	G_T-L_C (dB)	EIRP (dBm)	EIRP (mW)	Limit (W)
504204	2521.02	23.49	1.69	25.18	329.61	2
518598	2592.99	24.25	1.69	25.94	392.64	2
532998	2664.99	24.09	1.69	25.78	378.44	2

CHANNEL BANDWIDTH: 50MHz 256QAM

Channel	Frequency (MHz)	Conducted Power (dBm)	G_T-L_C (dB)	EIRP (dBm)	EIRP (mW)	Limit (W)
504204	2521.02	23.09	1.69	24.78	300.61	2
518598	2592.99	23.83	1.69	25.52	356.45	2
532998	2664.99	23.62	1.69	25.31	339.63	2

CHANNEL BANDWIDTH: 60MHz Pi/2 BPSK

Channel	Frequency (MHz)	Conducted Power (dBm)	G_T-L_C (dB)	EIRP (dBm)	EIRP (mW)	Limit (W)
505200	2526	26.15	1.69	27.84	608.14	2
518598	2592.99	26.4	1.69	28.09	644.17	2
531996	2659.98	26.38	1.69	28.07	641.21	2

CHANNEL BANDWIDTH: 60MHz QPSK

Channel	Frequency (MHz)	Conducted Power (dBm)	G_T-L_C (dB)	EIRP (dBm)	EIRP (mW)	Limit (W)
505200	2526	25.91	1.69	27.6	575.44	2
518598	2592.99	26.68	1.69	28.37	687.07	2
531996	2659.98	26.51	1.69	28.2	660.69	2

CHANNEL BANDWIDTH: 60MHz 16QAM

Channel	Frequency (MHz)	Conducted Power (dBm)	G_T-L_C (dB)	EIRP (dBm)	EIRP (mW)	Limit (W)
505200	2526	25.22	1.69	26.91	490.91	2
518598	2592.99	25.98	1.69	27.67	584.79	2
531996	2659.98	25.79	1.69	27.48	559.76	2

CHANNEL BANDWIDTH: 60MHz 64QAM

Channel	Frequency (MHz)	Conducted Power (dBm)	G_T-L_C (dB)	EIRP (dBm)	EIRP (mW)	Limit (W)
505200	2526	23.5	1.69	25.19	330.37	2
518598	2592.99	24.3	1.69	25.99	397.19	2
531996	2659.98	24.04	1.69	25.73	374.11	2

CHANNEL BANDWIDTH: 60MHz 256QAM

Channel	Frequency (MHz)	Conducted Power (dBm)	G_T-L_C (dB)	EIRP (dBm)	EIRP (mW)	Limit (W)
505200	2526	23.05	1.69	24.74	297.85	2
518598	2592.99	23.88	1.69	25.57	360.58	2
531996	2659.98	23.64	1.69	25.33	341.19	2

CHANNEL BANDWIDTH: 80MHz Pi/2 BPSK

Channel	Frequency (MHz)	Conducted Power (dBm)	G_T-L_C (dB)	EIRP (dBm)	EIRP (mW)	Limit (W)
507204	2536.02	26.17	1.69	27.86	610.94	2
518598	2592.99	26.43	1.69	28.12	648.63	2
529998	2649.99	26.35	1.69	28.04	636.80	2

CHANNEL BANDWIDTH: 80MHz QPSK

Channel	Frequency (MHz)	Conducted Power (dBm)	G_T-L_C (dB)	EIRP (dBm)	EIRP (mW)	Limit (W)
507204	2536.02	25.91	1.69	27.6	575.44	2
518598	2592.99	26.69	1.69	28.38	688.65	2
529998	2649.99	26.48	1.69	28.17	656.15	2

CHANNEL BANDWIDTH: 80MHz 16QAM

Channel	Frequency (MHz)	Conducted Power (dBm)	G_T-L_C (dB)	EIRP (dBm)	EIRP (mW)	Limit (W)
507204	2536.02	25.19	1.69	26.88	487.53	2
518598	2592.99	25.97	1.69	27.66	583.45	2
529998	2649.99	25.76	1.69	27.45	555.9	2

CHANNEL BANDWIDTH: 80MHz 64QAM

Channel	Frequency (MHz)	Conducted Power (dBm)	G_T-L_C (dB)	EIRP (dBm)	EIRP (mW)	Limit (W)
507204	2536.02	23.46	1.69	25.15	327.34	2
518598	2592.99	24.29	1.69	25.98	396.28	2
529998	2649.99	24.05	1.69	25.74	374.97	2

CHANNEL BANDWIDTH: 80MHz 256QAM

Channel	Frequency (MHz)	Conducted Power (dBm)	G_T-L_C (dB)	EIRP (dBm)	EIRP (mW)	Limit (W)
507204	2536.02	23.09	1.69	24.78	300.61	2
518598	2592.99	23.82	1.69	25.51	355.63	2
529998	2649.99	23.66	1.69	25.35	342.77	2

CHANNEL BANDWIDTH: 90MHz Pi/2 BPSK

Channel	Frequency (MHz)	Conducted Power (dBm)	G_T-L_C (dB)	EIRP (dBm)	EIRP (mW)	Limit (W)
508200	2541	26.13	1.69	27.82	605.34	2
518598	2592.99	26.41	1.69	28.1	645.65	2
528996	2644.98	26.37	1.69	28.06	639.73	2

CHANNEL BANDWIDTH: 90MHz QPSK

Channel	Frequency (MHz)	Conducted Power (dBm)	G_T-L_C (dB)	EIRP (dBm)	EIRP (mW)	Limit (W)
508200	2541	25.96	1.69	27.65	582.1	2
518598	2592.99	26.71	1.69	28.4	691.83	2
528996	2644.98	26.45	1.69	28.14	651.63	2

CHANNEL BANDWIDTH: 90MHz 16QAM

Channel	Frequency (MHz)	Conducted Power (dBm)	G_T-L_C (dB)	EIRP (dBm)	EIRP (mW)	Limit (W)
508200	2541	25.17	1.69	26.86	485.29	2
518598	2592.99	26	1.69	27.69	587.49	2
528996	2644.98	25.76	1.69	27.45	555.9	2

CHANNEL BANDWIDTH: 90MHz 64QAM

Channel	Frequency (MHz)	Conducted Power (dBm)	G_T-L_C (dB)	EIRP (dBm)	EIRP (mW)	Limit (W)
508200	2541	23.51	1.69	25.2	331.13	2
518598	2592.99	24.27	1.69	25.96	394.46	2
528996	2644.98	24.08	1.69	25.77	377.57	2

CHANNEL BANDWIDTH: 90MHz 256QAM

Channel	Frequency (MHz)	Conducted Power (dBm)	G_T-L_C (dB)	EIRP (dBm)	EIRP (mW)	Limit (W)
508200	2541	23.09	1.69	24.78	300.61	2
518598	2592.99	23.83	1.69	25.52	356.45	2
528996	2644.98	23.62	1.69	25.31	339.63	2

CHANNEL BANDWIDTH: 100MHz Pi/2 BPSK

Channel	Frequency (MHz)	Conducted Power (dBm)	G_T-L_C (dB)	EIRP (dBm)	EIRP (mW)	Limit (W)
509202	2546.01	25.97	1.69	27.66	583.45	2
518598	2592.99	26.76	1.69	28.45	699.84	2
528000	2640	26.53	1.69	28.22	663.74	2

CHANNEL BANDWIDTH: 100MHz QPSK

Channel	Frequency (MHz)	Conducted Power (dBm)	G_T-L_C (dB)	EIRP (dBm)	EIRP (mW)	Limit (W)
509202	2546.01	26.21	1.69	27.9	616.6	2
518598	2592.99	26.45	1.69	28.14	651.63	2
528000	2640	26.4	1.69	28.09	644.17	2

CHANNEL BANDWIDTH: 100MHz 16QAM

Channel	Frequency (MHz)	Conducted Power (dBm)	G_T-L_C (dB)	EIRP (dBm)	EIRP (mW)	Limit (W)
509202	2546.01	25.25	1.69	26.94	494.31	2
518598	2592.99	26.04	1.69	27.73	592.93	2
528000	2640	25.81	1.69	27.5	562.34	2

CHANNEL BANDWIDTH: 100MHz 64QAM

Channel	Frequency (MHz)	Conducted Power (dBm)	G_T-L_C (dB)	EIRP (dBm)	EIRP (mW)	Limit (W)
509202	2546.01	23.54	1.69	25.23	333.43	2
518598	2592.99	24.33	1.69	26.02	399.94	2
528000	2640	24.1	1.69	25.79	379.31	2

CHANNEL BANDWIDTH: 100MHz 256QAM

Channel	Frequency (MHz)	Conducted Power (dBm)	G_T-L_C (dB)	EIRP (dBm)	EIRP (mW)	Limit (W)
509202	2546.01	23.11	1.69	24.8	302	2
518598	2592.99	23.9	1.69	25.59	362.24	2
528000	2640	23.67	1.69	25.36	343.56	2

REMARKS: ERP Output Power (dBm) = EIRP (dBm) -2.15(dB).

N66

CHANNEL BANDWIDTH: 5MHz Pi/2 BPSK

Channel	Frequency (MHz)	Conducted Power (dBm)	G_T-L_C (dB)	EIRP (dBm)	EIRP (mW)	Limit (W)
342500	1712.5	23.46	3.09	26.55	451.86	1
349000	1745	23.36	3.09	26.45	441.57	1
355500	1777.5	23.49	3.09	26.58	454.99	1

CHANNEL BANDWIDTH: 5MHz QPSK

Channel	Frequency (MHz)	Conducted Power (dBm)	G_T-L_C (dB)	EIRP (dBm)	EIRP (mW)	Limit (W)
342500	1712.5	23.35	3.09	26.44	440.55	1
349000	1745	23.23	3.09	26.32	428.55	1
355500	1777.5	23.33	3.09	26.42	438.53	1

CHANNEL BANDWIDTH: 5MHz 16QAM

Channel	Frequency (MHz)	Conducted Power (dBm)	G_T-L_C (dB)	EIRP (dBm)	EIRP (mW)	Limit (W)
342500	1712.5	22.44	3.09	25.53	357.27	1
349000	1745	22.37	3.09	25.46	351.56	1
355500	1777.5	22.52	3.09	25.61	363.92	1

CHANNEL BANDWIDTH: 5MHz 64QAM

Channel	Frequency (MHz)	Conducted Power (dBm)	G_T-L_C (dB)	EIRP (dBm)	EIRP (mW)	Limit (W)
342500	1712.5	20.95	3.09	24.04	253.51	1
349000	1745	20.85	3.09	23.94	247.74	1
355500	1777.5	20.98	3.09	24.07	255.27	1

CHANNEL BANDWIDTH: 5MHz 256QAM

Channel	Frequency (MHz)	Conducted Power (dBm)	G_T-L_C (dB)	EIRP (dBm)	EIRP (mW)	Limit (W)
342500	1712.5	20.95	3.09	24.04	253.51	1
349000	1745	20.81	3.09	23.9	245.47	1
355500	1777.5	20.98	3.09	24.07	255.27	1

CHANNEL BANDWIDTH: 10MHz Pi/2 BPSK

Channel	Frequency (MHz)	Conducted Power (dBm)	G_T-L_C (dB)	EIRP (dBm)	EIRP (mW)	Limit (W)
343000	1715	23.45	3.09	26.54	450.82	1
349000	1745	23.31	3.09	26.4	436.52	1
355000	1775	23.51	3.09	26.6	457.09	1

CHANNEL BANDWIDTH: 10MHz QPSK

Channel	Frequency (MHz)	Conducted Power (dBm)	G_T-L_C (dB)	EIRP (dBm)	EIRP (mW)	Limit (W)
343000	1715	23.32	3.09	26.41	437.52	1
349000	1745	23.22	3.09	26.31	427.56	1
355000	1775	23.35	3.09	26.44	440.55	1

CHANNEL BANDWIDTH: 10MHz 16QAM

Channel	Frequency (MHz)	Conducted Power (dBm)	G_T-L_C (dB)	EIRP (dBm)	EIRP (mW)	Limit (W)
343000	1715	22.45	3.09	25.54	358.1	1
349000	1745	22.36	3.09	25.45	350.75	1
355000	1775	22.55	3.09	25.64	366.44	1

CHANNEL BANDWIDTH: 10MHz 64QAM

Channel	Frequency (MHz)	Conducted Power (dBm)	G_T-L_C (dB)	EIRP (dBm)	EIRP (mW)	Limit (W)
343000	1715	20.91	3.09	24	251.19	1
349000	1745	20.82	3.09	23.91	246.04	1
355000	1775	20.99	3.09	24.08	255.86	1

CHANNEL BANDWIDTH: 10MHz 256QAM

Channel	Frequency (MHz)	Conducted Power (dBm)	G_T-L_C (dB)	EIRP (dBm)	EIRP (mW)	Limit (W)
343000	1715	20.95	3.09	24.04	253.51	1
349000	1745	20.83	3.09	23.92	246.6	1
355000	1775	20.93	3.09	24.02	252.35	1

CHANNEL BANDWIDTH: 15MHz Pi/2 BPSK

Channel	Frequency (MHz)	Conducted Power (dBm)	G_T-L_C (dB)	EIRP (dBm)	EIRP (mW)	Limit (W)
343500	1717.5	23.4	3.09	26.49	445.66	1
349000	1745	23.35	3.09	26.44	440.55	1
354500	1772.5	23.48	3.09	26.57	453.94	1

CHANNEL BANDWIDTH: 15MHz QPSK

Channel	Frequency (MHz)	Conducted Power (dBm)	G_T-L_C (dB)	EIRP (dBm)	EIRP (mW)	Limit (W)
343500	1717.5	23.31	3.09	26.4	436.52	1
349000	1745	23.17	3.09	26.26	422.67	1
354500	1772.5	23.35	3.09	26.44	440.55	1

CHANNEL BANDWIDTH: 15MHz 16QAM

Channel	Frequency (MHz)	Conducted Power (dBm)	G_T-L_C (dB)	EIRP (dBm)	EIRP (mW)	Limit (W)
343500	1717.5	22.49	3.09	25.58	361.41	1
349000	1745	22.35	3.09	25.44	349.95	1
354500	1772.5	22.55	3.09	25.64	366.44	1

CHANNEL BANDWIDTH: 15MHz 64QAM

Channel	Frequency (MHz)	Conducted Power (dBm)	G_T-L_C (dB)	EIRP (dBm)	EIRP (mW)	Limit (W)
343500	1717.5	20.95	3.09	24.04	253.51	1
349000	1745	20.85	3.09	23.94	247.74	1
354500	1772.5	20.98	3.09	24.07	255.27	1

CHANNEL BANDWIDTH: 15MHz 256QAM

Channel	Frequency (MHz)	Conducted Power (dBm)	G_T-L_C (dB)	EIRP (dBm)	EIRP (mW)	Limit (W)
343500	1717.5	20.95	3.09	24.04	253.51	1
349000	1745	20.81	3.09	23.9	245.47	1
354500	1772.5	20.98	3.09	24.07	255.27	1

CHANNEL BANDWIDTH: 20MHz Pi/2 BPSK

Channel	Frequency (MHz)	Conducted Power (dBm)	G_T-L_C (dB)	EIRP (dBm)	EIRP (mW)	Limit (W)
344000	1720	23.41	3.09	26.5	446.68	1
349000	1745	23.32	3.09	26.41	437.52	1
354000	1770	23.51	3.09	26.6	457.09	1

CHANNEL BANDWIDTH: 20MHz QPSK

Channel	Frequency (MHz)	Conducted Power (dBm)	G_T-L_C (dB)	EIRP (dBm)	EIRP (mW)	Limit (W)
344000	1720	23.28	3.09	26.37	433.51	1
349000	1745	23.23	3.09	26.32	428.55	1
354000	1770	23.35	3.09	26.44	440.55	1

CHANNEL BANDWIDTH: 20MHz 16QAM

Channel	Frequency (MHz)	Conducted Power (dBm)	G_T-L_C (dB)	EIRP (dBm)	EIRP (mW)	Limit (W)
344000	1720	22.46	3.09	25.55	358.92	1
349000	1745	22.34	3.09	25.43	349.14	1
354000	1770	22.52	3.09	25.61	363.92	1

CHANNEL BANDWIDTH: 20MHz 64QAM

Channel	Frequency (MHz)	Conducted Power (dBm)	G_T-L_C (dB)	EIRP (dBm)	EIRP (mW)	Limit (W)
344000	1720	20.91	3.09	24	251.19	1
349000	1745	20.84	3.09	23.93	247.17	1
354000	1770	20.99	3.09	24.08	255.86	1

CHANNEL BANDWIDTH: 20MHz 256QAM

Channel	Frequency (MHz)	Conducted Power (dBm)	G_T-L_C (dB)	EIRP (dBm)	EIRP (mW)	Limit (W)
344000	1720	20.91	3.09	24	251.19	1
349000	1745	20.77	3.09	23.86	243.22	1
354000	1770	20.95	3.09	24.04	253.51	1

REMARKS: ERP Output Power (dBm) = EIRP (dBm) -2.15(dB).

CHANNEL BANDWIDTH: 30MHz Pi/2 BPSK

Channel	Frequency (MHz)	Conducted Power (dBm)	G_T-L_C (dB)	EIRP (dBm)	EIRP (mW)	Limit (W)
345000	1725	23.45	3.09	26.54	450.82	1
349000	1745	23.36	3.09	26.45	441.57	1
353000	1765	23.47	3.09	26.56	452.90	1

CHANNEL BANDWIDTH: 30MHz QPSK

Channel	Frequency (MHz)	Conducted Power (dBm)	G_T-L_C (dB)	EIRP (dBm)	EIRP (mW)	Limit (W)
345000	1725	23.34	3.09	26.43	439.54	1
349000	1745	23.18	3.09	26.27	423.64	1
353000	1765	23.36	3.09	26.45	441.57	1

CHANNEL BANDWIDTH: 30MHz 16QAM

Channel	Frequency (MHz)	Conducted Power (dBm)	G_T-L_C (dB)	EIRP (dBm)	EIRP (mW)	Limit (W)
345000	1725	22.44	3.09	25.53	357.27	1
349000	1745	22.37	3.09	25.46	351.56	1
353000	1765	22.52	3.09	25.61	363.92	1

CHANNEL BANDWIDTH: 30MHz 64QAM

Channel	Frequency (MHz)	Conducted Power (dBm)	G_T-L_C (dB)	EIRP (dBm)	EIRP (mW)	Limit (W)
345000	1725	20.96	3.09	24.05	254.1	1
349000	1745	20.82	3.09	23.91	246.04	1
353000	1765	21.02	3.09	24.11	257.63	1

CHANNEL BANDWIDTH: 30MHz 256QAM

Channel	Frequency (MHz)	Conducted Power (dBm)	G_T-L_C (dB)	EIRP (dBm)	EIRP (mW)	Limit (W)
345000	1725	20.94	3.09	24.03	252.93	1
349000	1745	20.77	3.09	23.86	243.22	1
353000	1765	21	3.09	24.09	256.45	1

CHANNEL BANDWIDTH: 40MHz Pi/2 BPSK

Channel	Frequency (MHz)	Conducted Power (dBm)	G_T-L_C (dB)	EIRP (dBm)	EIRP (mW)	Limit (W)
346000	1730	23.48	3.09	26.57	453.94	1
349000	1745	23.37	3.09	26.46	442.59	1
352000	1760	23.53	3.09	26.62	459.20	1

CHANNEL BANDWIDTH: 40MHz QPSK

Channel	Frequency (MHz)	Conducted Power (dBm)	G_T-L_C (dB)	EIRP (dBm)	EIRP (mW)	Limit (W)
346000	1730	23.36	3.09	26.45	441.57	1
349000	1745	23.25	3.09	26.34	430.53	1
352000	1760	23.41	3.09	26.5	446.68	1

CHANNEL BANDWIDTH: 40MHz 16QAM

Channel	Frequency (MHz)	Conducted Power (dBm)	G_T-L_C (dB)	EIRP (dBm)	EIRP (mW)	Limit (W)
346000	1730	22.52	3.09	25.61	363.92	1
349000	1745	22.41	3.09	25.5	354.81	1
352000	1760	22.57	3.09	25.66	368.13	1

CHANNEL BANDWIDTH: 40MHz 64QAM

Channel	Frequency (MHz)	Conducted Power (dBm)	G_T-L_C (dB)	EIRP (dBm)	EIRP (mW)	Limit (W)
346000	1730	20.99	3.09	24.08	255.86	1
349000	1745	20.88	3.09	23.97	249.46	1
352000	1760	21.04	3.09	24.13	258.82	1

CHANNEL BANDWIDTH: 40MHz 256QAM

Channel	Frequency (MHz)	Conducted Power (dBm)	G_T-L_C (dB)	EIRP (dBm)	EIRP (mW)	Limit (W)
346000	1730	20.96	3.09	24.05	254.1	1
349000	1745	20.85	3.09	23.94	247.74	1
352000	1760	21.01	3.09	24.1	257.04	1

REMARKS: ERP Output Power (dBm) = EIRP (dBm) -2.15(dB).

N71

CHANNEL BANDWIDTH: 5MHz Pi/2 BPSK

Channel	Frequency (MHz)	Conducted Power (dBm)	G_T-L_C (dB)	EIRP (dBm)	EIRP (mW)	Limit (W)
133100	665.5	23.61	0.14	21.6	144.54	3
136100	680.5	23.85	0.14	21.84	152.76	3
139100	695.5	24	0.14	21.99	158.12	3

CHANNEL BANDWIDTH: 5MHz QPSK

Channel	Frequency (MHz)	Conducted Power (dBm)	G_T-L_C (dB)	EIRP (dBm)	EIRP (mW)	Limit (W)
133100	665.5	23.64	0.14	21.63	145.55	3
136100	680.5	23.82	0.14	21.81	151.71	3
139100	695.5	23.98	0.14	21.97	157.4	3

CHANNEL BANDWIDTH: 5MHz 16QAM

Channel	Frequency (MHz)	Conducted Power (dBm)	G_T-L_C (dB)	EIRP (dBm)	EIRP (mW)	Limit (W)
133100	665.5	22.98	0.14	20.97	125.03	3
136100	680.5	23.15	0.14	21.14	130.02	3
139100	695.5	23.29	0.14	21.28	134.28	3

CHANNEL BANDWIDTH: 5MHz 64QAM

Channel	Frequency (MHz)	Conducted Power (dBm)	G_T-L_C (dB)	EIRP (dBm)	EIRP (mW)	Limit (W)
133100	665.5	21.28	0.14	19.27	84.53	3
136100	680.5	21.47	0.14	19.46	88.31	3
139100	695.5	21.62	0.14	19.61	91.41	3

CHANNEL BANDWIDTH: 5MHz 256QAM

Channel	Frequency (MHz)	Conducted Power (dBm)	G_T-L_C (dB)	EIRP (dBm)	EIRP (mW)	Limit (W)
133100	665.5	21.33	0.14	19.32	85.51	3
136100	680.5	21.47	0.14	19.46	88.31	3
139100	695.5	21.7	0.14	19.69	93.11	3

CHANNEL BANDWIDTH: 10MHz Pi/2 BPSK

Channel	Frequency (MHz)	Conducted Power (dBm)	G_T-L_C (dB)	EIRP (dBm)	EIRP (mW)	Limit (W)
133600	668	23.6	0.14	21.59	144.21	3
136100	680.5	23.83	0.14	21.82	152.05	3
138600	693	24.01	0.14	22	158.49	3

CHANNEL BANDWIDTH: 10MHz QPSK

Channel	Frequency (MHz)	Conducted Power (dBm)	G_T-L_C (dB)	EIRP (dBm)	EIRP (mW)	Limit (W)
133600	668	23.65	0.14	21.64	145.88	3
136100	680.5	23.84	0.14	21.83	152.41	3
138600	693	23.96	0.14	21.95	156.68	3

CHANNEL BANDWIDTH: 10MHz 16QAM

Channel	Frequency (MHz)	Conducted Power (dBm)	G_T-L_C (dB)	EIRP (dBm)	EIRP (mW)	Limit (W)
133600	668	22.98	0.14	20.97	125.03	3
136100	680.5	23.13	0.14	21.12	129.42	3
138600	693	23.31	0.14	21.3	134.9	3

CHANNEL BANDWIDTH: 10MHz 64QAM

Channel	Frequency (MHz)	Conducted Power (dBm)	G_T-L_C (dB)	EIRP (dBm)	EIRP (mW)	Limit (W)
133600	668	21.27	0.14	19.26	84.33	3
136100	680.5	21.48	0.14	19.47	88.51	3
138600	693	21.62	0.14	19.61	91.41	3

CHANNEL BANDWIDTH: 10MHz 256QAM

Channel	Frequency (MHz)	Conducted Power (dBm)	G_T-L_C (dB)	EIRP (dBm)	EIRP (mW)	Limit (W)
133600	668	21.34	0.14	19.33	85.7	3
136100	680.5	21.54	0.14	19.53	89.74	3
138600	693	21.68	0.14	19.67	92.68	3

CHANNEL BANDWIDTH: 15MHz Pi/2 BPSK

Channel	Frequency (MHz)	Conducted Power (dBm)	G_T-L_C (dB)	EIRP (dBm)	EIRP (mW)	Limit (W)
134100	670.5	23.66	0.14	21.65	146.22	3
136100	680.5	23.83	0.14	21.82	152.05	3
138100	690.5	24	0.14	21.99	158.12	3

CHANNEL BANDWIDTH: 15MHz QPSK

Channel	Frequency (MHz)	Conducted Power (dBm)	G_T-L_C (dB)	EIRP (dBm)	EIRP (mW)	Limit (W)
134100	670.5	23.64	0.14	21.63	145.55	3
136100	680.5	23.83	0.14	21.82	152.05	3
138100	690.5	23.98	0.14	21.97	157.4	3

CHANNEL BANDWIDTH: 15MHz 16QAM

Channel	Frequency (MHz)	Conducted Power (dBm)	G_T-L_C (dB)	EIRP (dBm)	EIRP (mW)	Limit (W)
134100	670.5	22.98	0.14	20.97	125.03	3
136100	680.5	23.12	0.14	21.11	129.12	3
138100	690.5	23.35	0.14	21.34	136.14	3

CHANNEL BANDWIDTH: 15MHz 64QAM

Channel	Frequency (MHz)	Conducted Power (dBm)	G_T-L_C (dB)	EIRP (dBm)	EIRP (mW)	Limit (W)
134100	670.5	21.27	0.14	19.26	84.33	3
136100	680.5	21.42	0.14	19.41	87.3	3
138100	690.5	21.62	0.14	19.61	91.41	3

CHANNEL BANDWIDTH: 15MHz 256QAM

Channel	Frequency (MHz)	Conducted Power (dBm)	G_T-L_C (dB)	EIRP (dBm)	EIRP (mW)	Limit (W)
134100	670.5	21.33	0.14	19.32	85.51	3
136100	680.5	21.51	0.14	19.5	89.13	3
138100	690.5	21.7	0.14	19.69	93.11	3

CHANNEL BANDWIDTH: 20MHz Pi/2 BPSK

Channel	Frequency (MHz)	Conducted Power (dBm)	G_T-L_C (dB)	EIRP (dBm)	EIRP (mW)	Limit (W)
134600	673	23.67	0.14	21.66	146.55	3
136100	680.5	23.87	0.14	21.86	153.46	3
137600	688	23.98	0.14	21.97	157.40	3

CHANNEL BANDWIDTH: 20MHz QPSK

Channel	Frequency (MHz)	Conducted Power (dBm)	G_T-L_C (dB)	EIRP (dBm)	EIRP (mW)	Limit (W)
134600	673	23.66	0.14	21.65	146.22	3
136100	680.5	23.86	0.14	21.85	153.11	3
137600	688	23.96	0.14	21.95	156.68	3

CHANNEL BANDWIDTH: 20MHz 16QAM

Channel	Frequency (MHz)	Conducted Power (dBm)	G_T-L_C (dB)	EIRP (dBm)	EIRP (mW)	Limit (W)
134600	673	23	0.14	20.99	125.6	3
136100	680.5	23.2	0.14	21.19	131.52	3
137600	688	23.36	0.14	21.35	136.46	3

CHANNEL BANDWIDTH: 20MHz 64QAM

Channel	Frequency (MHz)	Conducted Power (dBm)	G_T-L_C (dB)	EIRP (dBm)	EIRP (mW)	Limit (W)
134600	673	21.29	0.14	19.28	84.72	3
136100	680.5	21.49	0.14	19.48	88.72	3
137600	688	21.65	0.14	19.64	92.04	3

CHANNEL BANDWIDTH: 20MHz 256QAM

Channel	Frequency (MHz)	Conducted Power (dBm)	G_T-L_C (dB)	EIRP (dBm)	EIRP (mW)	Limit (W)
134600	673	21.35	0.14	19.34	85.9	3
136100	680.5	21.55	0.14	19.54	89.95	3
137600	688	21.71	0.14	19.7	93.33	3

REMARKS: ERP Output Power (dBm) = EIRP (dBm) -2.15(dB).

N77C

CHANNEL BANDWIDTH: 20MHz Pi/2 BPSK

Channel	Frequency (MHz)	Conducted Power (dBm)	G_T-L_C (dB)	EIRP (dBm)	EIRP (mW)	Limit (W)
647334	3710	23.89	1.5	25.39	345.94	1
656000	3840	23.9	1.5	25.4	346.74	1
664666	3970	23.76	1.5	25.26	335.74	1

CHANNEL BANDWIDTH: 20MHz QPSK

Channel	Frequency (MHz)	Conducted Power (dBm)	G_T-L_C (dB)	EIRP (dBm)	EIRP (mW)	Limit (W)
647334	3710	23.75	1.5	25.25	334.97	1
656000	3840	23.67	1.5	25.17	328.85	1
664666	3970	23.56	1.5	25.06	320.63	1

CHANNEL BANDWIDTH: 20MHz 16QAM

Channel	Frequency (MHz)	Conducted Power (dBm)	G_T-L_C (dB)	EIRP (dBm)	EIRP (mW)	Limit (W)
647334	3710	23.79	1.5	25.29	338.06	1
656000	3840	23.75	1.5	25.25	334.97	1
664666	3970	23.56	1.5	25.06	320.63	1

CHANNEL BANDWIDTH: 20MHz 64QAM

Channel	Frequency (MHz)	Conducted Power (dBm)	G_T-L_C (dB)	EIRP (dBm)	EIRP (mW)	Limit (W)
647334	3710	23.76	1.5	25.26	335.74	1
656000	3840	23.74	1.5	25.24	334.2	1
664666	3970	23.58	1.5	25.08	322.11	1

CHANNEL BANDWIDTH: 20MHz 256QAM

Channel	Frequency (MHz)	Conducted Power (dBm)	G_T-L_C (dB)	EIRP (dBm)	EIRP (mW)	Limit (W)
647334	3710	22.66	1.5	24.16	260.62	1
656000	3840	22.67	1.5	24.17	261.22	1
664666	3970	22.53	1.5	24.03	252.93	1

CHANNEL BANDWIDTH: 30MHz Pi/2 BPSK

Channel	Frequency (MHz)	Conducted Power (dBm)	G_T-L_C (dB)	EIRP (dBm)	EIRP (mW)	Limit (W)
647668	3715	23.94	1.5	25.44	349.95	1
656000	3840	23.88	1.5	25.38	345.14	1
664332	3965	23.79	1.5	25.29	338.06	1

CHANNEL BANDWIDTH: 30MHz QPSK

Channel	Frequency (MHz)	Conducted Power (dBm)	G_T-L_C (dB)	EIRP (dBm)	EIRP (mW)	Limit (W)
647668	3715	23.71	1.5	25.21	331.89	1
656000	3840	23.66	1.5	25.16	328.1	1
664332	3965	23.59	1.5	25.09	322.85	1

CHANNEL BANDWIDTH: 30MHz 16QAM

Channel	Frequency (MHz)	Conducted Power (dBm)	G_T-L_C (dB)	EIRP (dBm)	EIRP (mW)	Limit (W)
647668	3715	23.74	1.5	25.24	334.2	1
656000	3840	23.75	1.5	25.25	334.97	1
664332	3965	23.59	1.5	25.09	322.85	1

CHANNEL BANDWIDTH: 30MHz 64QAM

Channel	Frequency (MHz)	Conducted Power (dBm)	G_T-L_C (dB)	EIRP (dBm)	EIRP (mW)	Limit (W)
647668	3715	23.76	1.5	25.26	335.74	1
656000	3840	23.74	1.5	25.24	334.2	1
664332	3965	23.58	1.5	25.08	322.11	1

CHANNEL BANDWIDTH: 30MHz 256QAM

Channel	Frequency (MHz)	Conducted Power (dBm)	G_T-L_C (dB)	EIRP (dBm)	EIRP (mW)	Limit (W)
647668	3715	22.66	1.5	24.16	260.62	1
656000	3840	22.67	1.5	24.17	261.22	1
664332	3965	22.53	1.5	24.03	252.93	1

CHANNEL BANDWIDTH: 40MHz Pi/2 BPSK

Channel	Frequency (MHz)	Conducted Power (dBm)	G_T-L_C (dB)	EIRP (dBm)	EIRP (mW)	Limit (W)
648000	3720	23.95	1.5	25.45	350.75	1
656000	3840	23.88	1.5	25.38	345.14	1
664000	3960	23.73	1.5	25.23	333.43	1

CHANNEL BANDWIDTH: 40MHz QPSK

Channel	Frequency (MHz)	Conducted Power (dBm)	G_T-L_C (dB)	EIRP (dBm)	EIRP (mW)	Limit (W)
648000	3720	23.72	1.5	25.22	332.66	1
656000	3840	23.66	1.5	25.16	328.1	1
664000	3960	23.6	1.5	25.1	323.59	1

CHANNEL BANDWIDTH: 40MHz 16QAM

Channel	Frequency (MHz)	Conducted Power (dBm)	G_T-L_C (dB)	EIRP (dBm)	EIRP (mW)	Limit (W)
648000	3720	23.73	1.5	25.23	333.43	1
656000	3840	23.75	1.5	25.25	334.97	1
664000	3960	23.56	1.5	25.06	320.63	1

CHANNEL BANDWIDTH: 40MHz 64QAM

Channel	Frequency (MHz)	Conducted Power (dBm)	G_T-L_C (dB)	EIRP (dBm)	EIRP (mW)	Limit (W)
648000	3720	23.74	1.5	25.24	334.2	1
656000	3840	23.7	1.5	25.2	331.13	1
664000	3960	23.59	1.5	25.09	322.85	1

CHANNEL BANDWIDTH: 40MHz 256QAM

Channel	Frequency (MHz)	Conducted Power (dBm)	G_T-L_C (dB)	EIRP (dBm)	EIRP (mW)	Limit (W)
648000	3720	22.66	1.5	24.16	260.62	1
656000	3840	22.67	1.5	24.17	261.22	1
664000	3960	22.51	1.5	24.01	251.77	1

CHANNEL BANDWIDTH: 50MHz Pi/2 BPSK

Channel	Frequency (MHz)	Conducted Power (dBm)	G_T-L_C (dB)	EIRP (dBm)	EIRP (mW)	Limit (W)
648334	3725	23.91	1.5	25.41	347.54	1
656000	3840	23.87	1.5	25.37	344.35	1
663666	3955	23.75	1.5	25.25	334.97	1

CHANNEL BANDWIDTH: 50MHz QPSK

Channel	Frequency (MHz)	Conducted Power (dBm)	G_T-L_C (dB)	EIRP (dBm)	EIRP (mW)	Limit (W)
648334	3725	23.75	1.5	25.25	334.97	1
656000	3840	23.69	1.5	25.19	330.37	1
663666	3955	23.57	1.5	25.07	321.37	1

CHANNEL BANDWIDTH: 50MHz 16QAM

Channel	Frequency (MHz)	Conducted Power (dBm)	G_T-L_C (dB)	EIRP (dBm)	EIRP (mW)	Limit (W)
648334	3725	23.76	1.5	25.26	335.74	1
656000	3840	23.72	1.5	25.22	332.66	1
663666	3955	23.63	1.5	25.13	325.84	1

CHANNEL BANDWIDTH: 50MHz 64QAM

Channel	Frequency (MHz)	Conducted Power (dBm)	G_T-L_C (dB)	EIRP (dBm)	EIRP (mW)	Limit (W)
648334	3725	23.75	1.5	25.25	334.97	1
656000	3840	23.69	1.5	25.19	330.37	1
663666	3955	23.63	1.5	25.13	325.84	1

CHANNEL BANDWIDTH: 50MHz 256QAM

Channel	Frequency (MHz)	Conducted Power (dBm)	G_T-L_C (dB)	EIRP (dBm)	EIRP (mW)	Limit (W)
648334	3725	22.7	1.5	24.2	263.03	1
656000	3840	22.62	1.5	24.12	258.23	1
663666	3955	22.51	1.5	24.01	251.77	1

CHANNEL BANDWIDTH: 60MHz Pi/2 BPSK

Channel	Frequency (MHz)	Conducted Power (dBm)	G_T-L_C (dB)	EIRP (dBm)	EIRP (mW)	Limit (W)
648668	3730	23.94	1.5	25.44	349.95	1
656000	3840	23.88	1.5	25.38	345.14	1
663332	3950	23.79	1.5	25.29	338.06	1

CHANNEL BANDWIDTH: 60MHz QPSK

Channel	Frequency (MHz)	Conducted Power (dBm)	G_T-L_C (dB)	EIRP (dBm)	EIRP (mW)	Limit (W)
648668	3730	23.71	1.5	25.21	331.89	1
656000	3840	23.66	1.5	25.16	328.1	1
663332	3950	23.59	1.5	25.09	322.85	1

CHANNEL BANDWIDTH: 60MHz 16QAM

Channel	Frequency (MHz)	Conducted Power (dBm)	G_T-L_C (dB)	EIRP (dBm)	EIRP (mW)	Limit (W)
648668	3730	23.74	1.5	25.24	334.2	1
656000	3840	23.75	1.5	25.25	334.97	1
663332	3950	23.59	1.5	25.09	322.85	1

CHANNEL BANDWIDTH: 60MHz 64QAM

Channel	Frequency (MHz)	Conducted Power (dBm)	G_T-L_C (dB)	EIRP (dBm)	EIRP (mW)	Limit (W)
648668	3730	23.76	1.5	25.26	335.74	1
656000	3840	23.74	1.5	25.24	334.2	1
663332	3950	23.58	1.5	25.08	322.11	1

CHANNEL BANDWIDTH: 60MHz 256QAM

Channel	Frequency (MHz)	Conducted Power (dBm)	G_T-L_C (dB)	EIRP (dBm)	EIRP (mW)	Limit (W)
648668	3730	22.66	1.5	24.16	260.62	1
656000	3840	22.67	1.5	24.17	261.22	1
663332	3950	22.53	1.5	24.03	252.93	1

CHANNEL BANDWIDTH: 70MHz Pi/2 BPSK

Channel	Frequency (MHz)	Conducted Power (dBm)	G_T-L_C (dB)	EIRP (dBm)	EIRP (mW)	Limit (W)
649000	3735	23.91	1.5	25.41	347.54	1
656000	3840	23.89	1.5	25.39	345.94	1
663000	3945	23.8	1.5	25.3	338.84	1

CHANNEL BANDWIDTH: 70MHz QPSK

Channel	Frequency (MHz)	Conducted Power (dBm)	G_T-L_C (dB)	EIRP (dBm)	EIRP (mW)	Limit (W)
649000	3735	23.75	1.5	25.25	334.97	1
656000	3840	23.67	1.5	25.17	328.85	1
663000	3945	23.56	1.5	25.06	320.63	1

CHANNEL BANDWIDTH: 70MHz 16QAM

Channel	Frequency (MHz)	Conducted Power (dBm)	G_T-L_C (dB)	EIRP (dBm)	EIRP (mW)	Limit (W)
649000	3735	23.79	1.5	25.29	338.06	1
656000	3840	23.75	1.5	25.25	334.97	1
663000	3945	23.56	1.5	25.06	320.63	1

CHANNEL BANDWIDTH: 70MHz 64QAM

Channel	Frequency (MHz)	Conducted Power (dBm)	G_T-L_C (dB)	EIRP (dBm)	EIRP (mW)	Limit (W)
649000	3735	23.74	1.5	25.24	334.2	1
656000	3840	23.69	1.5	25.19	330.37	1
663000	3945	23.62	1.5	25.12	325.09	1

CHANNEL BANDWIDTH: 70MHz 256QAM

Channel	Frequency (MHz)	Conducted Power (dBm)	G_T-L_C (dB)	EIRP (dBm)	EIRP (mW)	Limit (W)
649000	3735	22.66	1.5	24.16	260.62	1
656000	3840	22.67	1.5	24.17	261.22	1
663000	3945	22.5	1.5	24	251.19	1

CHANNEL BANDWIDTH: 80MHz Pi/2 BPSK

Channel	Frequency (MHz)	Conducted Power (dBm)	G_T-L_C (dB)	EIRP (dBm)	EIRP (mW)	Limit (W)
649334	3740	23.91	1.5	25.41	347.54	1
656000	3840	23.87	1.5	25.37	344.35	1
662666	3940	23.76	1.5	25.26	335.74	1

CHANNEL BANDWIDTH: 80MHz QPSK

Channel	Frequency (MHz)	Conducted Power (dBm)	G_T-L_C (dB)	EIRP (dBm)	EIRP (mW)	Limit (W)
649334	3740	23.71	1.5	25.21	331.89	1
656000	3840	23.67	1.5	25.17	328.85	1
662666	3940	23.56	1.5	25.06	320.63	1

CHANNEL BANDWIDTH: 80MHz 16QAM

Channel	Frequency (MHz)	Conducted Power (dBm)	G_T-L_C (dB)	EIRP (dBm)	EIRP (mW)	Limit (W)
649334	3740	23.76	1.5	25.26	335.74	1
656000	3840	23.72	1.5	25.22	332.66	1
662666	3940	23.63	1.5	25.13	325.84	1

CHANNEL BANDWIDTH: 80MHz 64QAM

Channel	Frequency (MHz)	Conducted Power (dBm)	G_T-L_C (dB)	EIRP (dBm)	EIRP (mW)	Limit (W)
649334	3740	23.72	1.5	25.22	332.66	1
656000	3840	23.73	1.5	25.23	333.43	1
662666	3940	23.59	1.5	25.09	322.85	1

CHANNEL BANDWIDTH: 80MHz 256QAM

Channel	Frequency (MHz)	Conducted Power (dBm)	G_T-L_C (dB)	EIRP (dBm)	EIRP (mW)	Limit (W)
649334	3740	22.7	1.5	24.2	263.03	1
656000	3840	22.61	1.5	24.11	257.63	1
662666	3940	22.55	1.5	24.05	254.1	1

CHANNEL BANDWIDTH: 90MHz Pi/2 BPSK

Channel	Frequency (MHz)	Conducted Power (dBm)	G_T-L_C (dB)	EIRP (dBm)	EIRP (mW)	Limit (W)
649668	3745	23.89	1.5	25.39	345.94	1
656000	3840	23.9	1.5	25.4	346.74	1
662332	3935	23.76	1.5	25.26	335.74	1

CHANNEL BANDWIDTH: 90MHz QPSK

Channel	Frequency (MHz)	Conducted Power (dBm)	G_T-L_C (dB)	EIRP (dBm)	EIRP (mW)	Limit (W)
649668	3745	23.76	1.5	25.26	335.74	1
656000	3840	23.69	1.5	25.19	330.37	1
662332	3935	23.53	1.5	25.03	318.42	1

CHANNEL BANDWIDTH: 90MHz 16QAM

Channel	Frequency (MHz)	Conducted Power (dBm)	G_T-L_C (dB)	EIRP (dBm)	EIRP (mW)	Limit (W)
649668	3745	23.72	1.5	25.22	332.66	1
656000	3840	23.7	1.5	25.2	331.13	1
662332	3935	23.62	1.5	25.12	325.09	1

CHANNEL BANDWIDTH: 90MHz 64QAM

Channel	Frequency (MHz)	Conducted Power (dBm)	G_T-L_C (dB)	EIRP (dBm)	EIRP (mW)	Limit (W)
649668	3745	23.77	1.5	25.27	336.51	1
656000	3840	23.71	1.5	25.21	331.89	1
662332	3935	23.62	1.5	25.12	325.09	1

CHANNEL BANDWIDTH: 90MHz 256QAM

Channel	Frequency (MHz)	Conducted Power (dBm)	G_T-L_C (dB)	EIRP (dBm)	EIRP (mW)	Limit (W)
649668	3745	22.7	1.5	24.2	263.03	1
656000	3840	22.62	1.5	24.12	258.23	1
662332	3935	22.51	1.5	24.01	251.77	1

CHANNEL BANDWIDTH: 100MHz Pi/2 BPSK

Channel	Frequency (MHz)	Conducted Power (dBm)	G_T-L_C (dB)	EIRP (dBm)	EIRP (mW)	Limit (W)
650000	3750	23.97	1.5	25.47	352.37	1
656000	3840	23.94	1.5	25.44	349.95	1
662000	3930	23.81	1.5	25.31	339.63	1

CHANNEL BANDWIDTH: 100MHz QPSK

Channel	Frequency (MHz)	Conducted Power (dBm)	G_T-L_C (dB)	EIRP (dBm)	EIRP (mW)	Limit (W)
650000	3750	23.77	1.5	25.27	336.51	1
656000	3840	23.74	1.5	25.24	334.2	1
662000	3930	23.61	1.5	25.11	324.34	1

CHANNEL BANDWIDTH: 100MHz 16QAM

Channel	Frequency (MHz)	Conducted Power (dBm)	G_T-L_C (dB)	EIRP (dBm)	EIRP (mW)	Limit (W)
650000	3750	23.8	1.5	25.3	338.84	1
656000	3840	23.77	1.5	25.27	336.51	1
662000	3930	23.64	1.5	25.14	326.59	1

CHANNEL BANDWIDTH: 100MHz 64QAM

Channel	Frequency (MHz)	Conducted Power (dBm)	G_T-L_C (dB)	EIRP (dBm)	EIRP (mW)	Limit (W)
650000	3750	23.8	1.5	25.3	338.84	1
656000	3840	23.77	1.5	25.27	336.51	1
662000	3930	23.64	1.5	25.14	326.59	1

CHANNEL BANDWIDTH: 100MHz 256QAM

Channel	Frequency (MHz)	Conducted Power (dBm)	G_T-L_C (dB)	EIRP (dBm)	EIRP (mW)	Limit (W)
650000	3750	22.72	1.5	24.22	264.24	1
656000	3840	22.69	1.5	24.19	262.42	1
662000	3930	22.56	1.5	24.06	254.68	1

REMARKS: ERP Output Power (dBm) = EIRP (dBm) -2.15(dB).

N77C-HPUE

CHANNEL BANDWIDTH: 20MHz Pi/2 BPSK

Channel	Frequency (MHz)	Conducted Power (dBm)	G_T-L_C (dB)	EIRP (dBm)	EIRP (mW)	Limit (W)
647334	3710	26.75	1.5	28.25	668.34	1
656000	3840	26.76	1.5	28.26	669.88	1
664666	3970	26.61	1.5	28.11	647.14	1

CHANNEL BANDWIDTH: 20MHz QPSK

Channel	Frequency (MHz)	Conducted Power (dBm)	G_T-L_C (dB)	EIRP (dBm)	EIRP (mW)	Limit (W)
647334	3710	26.68	1.5	28.18	657.66	1
656000	3840	26.52	1.5	28.02	633.87	1
664666	3970	26.38	1.5	27.88	613.76	1

CHANNEL BANDWIDTH: 20MHz 16QAM

Channel	Frequency (MHz)	Conducted Power (dBm)	G_T-L_C (dB)	EIRP (dBm)	EIRP (mW)	Limit (W)
647334	3710	26.59	1.5	28.09	644.17	1
656000	3840	26.52	1.5	28.02	633.87	1
664666	3970	26.38	1.5	27.88	613.76	1

CHANNEL BANDWIDTH: 20MHz 64QAM

Channel	Frequency (MHz)	Conducted Power (dBm)	G_T-L_C (dB)	EIRP (dBm)	EIRP (mW)	Limit (W)
647334	3710	26.67	1.5	28.17	656.15	1
656000	3840	26.58	1.5	28.08	642.69	1
664666	3970	26.46	1.5	27.96	625.17	1

CHANNEL BANDWIDTH: 20MHz 256QAM

Channel	Frequency (MHz)	Conducted Power (dBm)	G_T-L_C (dB)	EIRP (dBm)	EIRP (mW)	Limit (W)
647334	3710	25.58	1.5	27.08	510.5	1
656000	3840	25.5	1.5	27	501.19	1
664666	3970	25.38	1.5	26.88	487.53	1

CHANNEL BANDWIDTH: 30MHz Pi/2 BPSK

Channel	Frequency (MHz)	Conducted Power (dBm)	G_T-L_C (dB)	EIRP (dBm)	EIRP (mW)	Limit (W)
647668	3715	26.8	1.5	28.3	676.08	1
656000	3840	26.74	1.5	28.24	666.81	1
664332	3965	26.64	1.5	28.14	651.63	1

CHANNEL BANDWIDTH: 30MHz QPSK

Channel	Frequency (MHz)	Conducted Power (dBm)	G_T-L_C (dB)	EIRP (dBm)	EIRP (mW)	Limit (W)
647668	3715	26.64	1.5	28.14	651.63	1
656000	3840	26.51	1.5	28.01	632.41	1
664332	3965	26.41	1.5	27.91	618.02	1

CHANNEL BANDWIDTH: 30MHz 16QAM

Channel	Frequency (MHz)	Conducted Power (dBm)	G_T-L_C (dB)	EIRP (dBm)	EIRP (mW)	Limit (W)
647668	3715	26.54	1.5	28.04	636.8	1
656000	3840	26.52	1.5	28.02	633.87	1
664332	3965	26.41	1.5	27.91	618.02	1

CHANNEL BANDWIDTH: 30MHz 64QAM

Channel	Frequency (MHz)	Conducted Power (dBm)	G_T-L_C (dB)	EIRP (dBm)	EIRP (mW)	Limit (W)
647668	3715	26.67	1.5	28.17	656.15	1
656000	3840	26.58	1.5	28.08	642.69	1
664332	3965	26.46	1.5	27.96	625.17	1

CHANNEL BANDWIDTH: 30MHz 256QAM

Channel	Frequency (MHz)	Conducted Power (dBm)	G_T-L_C (dB)	EIRP (dBm)	EIRP (mW)	Limit (W)
647668	3715	25.58	1.5	27.08	510.5	1
656000	3840	25.5	1.5	27	501.19	1
664332	3965	25.38	1.5	26.88	487.53	1

CHANNEL BANDWIDTH: 40MHz Pi/2 BPSK

Channel	Frequency (MHz)	Conducted Power (dBm)	G_T-L_C (dB)	EIRP (dBm)	EIRP (mW)	Limit (W)
648000	3720	26.81	1.5	28.31	677.64	1
656000	3840	26.74	1.5	28.24	666.81	1
664000	3960	26.58	1.5	28.08	642.69	1

CHANNEL BANDWIDTH: 40MHz QPSK

Channel	Frequency (MHz)	Conducted Power (dBm)	G_T-L_C (dB)	EIRP (dBm)	EIRP (mW)	Limit (W)
648000	3720	26.65	1.5	28.15	653.13	1
656000	3840	26.51	1.5	28.01	632.41	1
664000	3960	26.42	1.5	27.92	619.44	1

CHANNEL BANDWIDTH: 40MHz 16QAM

Channel	Frequency (MHz)	Conducted Power (dBm)	G_T-L_C (dB)	EIRP (dBm)	EIRP (mW)	Limit (W)
648000	3720	26.53	1.5	28.03	635.33	1
656000	3840	26.52	1.5	28.02	633.87	1
664000	3960	26.38	1.5	27.88	613.76	1

CHANNEL BANDWIDTH: 40MHz 64QAM

Channel	Frequency (MHz)	Conducted Power (dBm)	G_T-L_C (dB)	EIRP (dBm)	EIRP (mW)	Limit (W)
648000	3720	26.65	1.5	28.15	653.13	1
656000	3840	26.54	1.5	28.04	636.8	1
664000	3960	26.47	1.5	27.97	626.61	1

CHANNEL BANDWIDTH: 40MHz 256QAM

Channel	Frequency (MHz)	Conducted Power (dBm)	G_T-L_C (dB)	EIRP (dBm)	EIRP (mW)	Limit (W)
648000	3720	25.58	1.5	27.08	510.5	1
656000	3840	25.5	1.5	27	501.19	1
664000	3960	25.36	1.5	26.86	485.29	1

CHANNEL BANDWIDTH: 50MHz Pi/2 BPSK

Channel	Frequency (MHz)	Conducted Power (dBm)	G_T-L_C (dB)	EIRP (dBm)	EIRP (mW)	Limit (W)
648334	3725	26.77	1.5	28.27	671.43	1
656000	3840	26.73	1.5	28.23	665.27	1
663666	3955	26.6	1.5	28.1	645.65	1

CHANNEL BANDWIDTH: 50MHz QPSK

Channel	Frequency (MHz)	Conducted Power (dBm)	G_T-L_C (dB)	EIRP (dBm)	EIRP (mW)	Limit (W)
648334	3725	26.68	1.5	28.18	657.66	1
656000	3840	26.54	1.5	28.04	636.8	1
663666	3955	26.39	1.5	27.89	615.18	1

CHANNEL BANDWIDTH: 50MHz 16QAM

Channel	Frequency (MHz)	Conducted Power (dBm)	G_T-L_C (dB)	EIRP (dBm)	EIRP (mW)	Limit (W)
648334	3725	26.56	1.5	28.06	639.73	1
656000	3840	26.49	1.5	27.99	629.51	1
663666	3955	26.45	1.5	27.95	623.73	1

CHANNEL BANDWIDTH: 50MHz 64QAM

Channel	Frequency (MHz)	Conducted Power (dBm)	G_T-L_C (dB)	EIRP (dBm)	EIRP (mW)	Limit (W)
648334	3725	26.66	1.5	28.16	654.64	1
656000	3840	26.53	1.5	28.03	635.33	1
663666	3955	26.51	1.5	28.01	632.41	1

CHANNEL BANDWIDTH: 50MHz 256QAM

Channel	Frequency (MHz)	Conducted Power (dBm)	G_T-L_C (dB)	EIRP (dBm)	EIRP (mW)	Limit (W)
648334	3725	25.62	1.5	27.12	515.23	1
656000	3840	25.45	1.5	26.95	495.45	1
663666	3955	25.36	1.5	26.86	485.29	1

CHANNEL BANDWIDTH: 60MHz Pi/2 BPSK

Channel	Frequency (MHz)	Conducted Power (dBm)	G_T-L_C (dB)	EIRP (dBm)	EIRP (mW)	Limit (W)
648668	3730	26.8	1.5	28.3	676.08	1
656000	3840	26.74	1.5	28.24	666.81	1
663332	3950	26.64	1.5	28.14	651.63	1

CHANNEL BANDWIDTH: 60MHz QPSK

Channel	Frequency (MHz)	Conducted Power (dBm)	G_T-L_C (dB)	EIRP (dBm)	EIRP (mW)	Limit (W)
648668	3730	26.64	1.5	28.14	651.63	1
656000	3840	26.51	1.5	28.01	632.41	1
663332	3950	26.41	1.5	27.91	618.02	1

CHANNEL BANDWIDTH: 60MHz 16QAM

Channel	Frequency (MHz)	Conducted Power (dBm)	G_T-L_C (dB)	EIRP (dBm)	EIRP (mW)	Limit (W)
648668	3730	26.54	1.5	28.04	636.8	1
656000	3840	26.52	1.5	28.02	633.87	1
663332	3950	26.41	1.5	27.91	618.02	1

CHANNEL BANDWIDTH: 60MHz 64QAM

Channel	Frequency (MHz)	Conducted Power (dBm)	G_T-L_C (dB)	EIRP (dBm)	EIRP (mW)	Limit (W)
648668	3730	26.67	1.5	28.17	656.15	1
656000	3840	26.58	1.5	28.08	642.69	1
663332	3950	26.46	1.5	27.96	625.17	1

CHANNEL BANDWIDTH: 60MHz 256QAM

Channel	Frequency (MHz)	Conducted Power (dBm)	G_T-L_C (dB)	EIRP (dBm)	EIRP (mW)	Limit (W)
648668	3730	25.58	1.5	27.08	510.5	1
656000	3840	25.5	1.5	27	501.19	1
663332	3950	25.38	1.5	26.88	487.53	1

CHANNEL BANDWIDTH: 70MHz Pi/2 BPSK

Channel	Frequency (MHz)	Conducted Power (dBm)	G_T-L_C (dB)	EIRP (dBm)	EIRP (mW)	Limit (W)
649000	3735	26.77	1.5	28.27	671.43	1
656000	3840	26.75	1.5	28.25	668.34	1
663000	3945	26.65	1.5	28.15	653.13	1

CHANNEL BANDWIDTH: 70MHz QPSK

Channel	Frequency (MHz)	Conducted Power (dBm)	G_T-L_C (dB)	EIRP (dBm)	EIRP (mW)	Limit (W)
649000	3735	26.68	1.5	28.18	657.66	1
656000	3840	26.52	1.5	28.02	633.87	1
663000	3945	26.38	1.5	27.88	613.76	1

CHANNEL BANDWIDTH: 70MHz 16QAM

Channel	Frequency (MHz)	Conducted Power (dBm)	G_T-L_C (dB)	EIRP (dBm)	EIRP (mW)	Limit (W)
649000	3735	26.59	1.5	28.09	644.17	1
656000	3840	26.52	1.5	28.02	633.87	1
663000	3945	26.38	1.5	27.88	613.76	1

CHANNEL BANDWIDTH: 70MHz 64QAM

Channel	Frequency (MHz)	Conducted Power (dBm)	G_T-L_C (dB)	EIRP (dBm)	EIRP (mW)	Limit (W)
649000	3735	26.65	1.5	28.15	653.13	1
656000	3840	26.53	1.5	28.03	635.33	1
663000	3945	26.5	1.5	28	630.96	1

CHANNEL BANDWIDTH: 70MHz 256QAM

Channel	Frequency (MHz)	Conducted Power (dBm)	G_T-L_C (dB)	EIRP (dBm)	EIRP (mW)	Limit (W)
649000	3735	25.58	1.5	27.08	510.5	1
656000	3840	25.5	1.5	27	501.19	1
663000	3945	25.35	1.5	26.85	484.17	1

CHANNEL BANDWIDTH: 80MHz Pi/2 BPSK

Channel	Frequency (MHz)	Conducted Power (dBm)	G_T-L_C (dB)	EIRP (dBm)	EIRP (mW)	Limit (W)
649334	3740	26.77	1.5	28.27	671.43	1
656000	3840	26.73	1.5	28.23	665.27	1
662666	3940	26.61	1.5	28.11	647.14	1

CHANNEL BANDWIDTH: 80MHz QPSK

Channel	Frequency (MHz)	Conducted Power (dBm)	G_T-L_C (dB)	EIRP (dBm)	EIRP (mW)	Limit (W)
649334	3740	26.64	1.5	28.14	651.63	1
656000	3840	26.52	1.5	28.02	633.87	1
662666	3940	26.38	1.5	27.88	613.76	1

CHANNEL BANDWIDTH: 80MHz 16QAM

Channel	Frequency (MHz)	Conducted Power (dBm)	G_T-L_C (dB)	EIRP (dBm)	EIRP (mW)	Limit (W)
649334	3740	26.56	1.5	28.06	639.73	1
656000	3840	26.49	1.5	27.99	629.51	1
662666	3940	26.45	1.5	27.95	623.73	1

CHANNEL BANDWIDTH: 80MHz 64QAM

Channel	Frequency (MHz)	Conducted Power (dBm)	G_T-L_C (dB)	EIRP (dBm)	EIRP (mW)	Limit (W)
649334	3740	26.63	1.5	28.13	650.13	1
656000	3840	26.57	1.5	28.07	641.21	1
662666	3940	26.47	1.5	27.97	626.61	1

CHANNEL BANDWIDTH: 80MHz 256QAM

Channel	Frequency (MHz)	Conducted Power (dBm)	G_T-L_C (dB)	EIRP (dBm)	EIRP (mW)	Limit (W)
649334	3740	25.62	1.5	27.12	515.23	1
656000	3840	25.44	1.5	26.94	494.31	1
662666	3940	25.4	1.5	26.9	489.78	1

CHANNEL BANDWIDTH: 90MHz Pi/2 BPSK

Channel	Frequency (MHz)	Conducted Power (dBm)	G_T-L_C (dB)	EIRP (dBm)	EIRP (mW)	Limit (W)
649668	3745	26.75	1.5	28.25	668.34	1
656000	3840	26.76	1.5	28.26	669.88	1
662332	3935	26.61	1.5	28.11	647.14	1

CHANNEL BANDWIDTH: 90MHz QPSK

Channel	Frequency (MHz)	Conducted Power (dBm)	G_T-L_C (dB)	EIRP (dBm)	EIRP (mW)	Limit (W)
649668	3745	26.69	1.5	28.19	659.17	1
656000	3840	26.54	1.5	28.04	636.8	1
662332	3935	26.35	1.5	27.85	609.54	1

CHANNEL BANDWIDTH: 90MHz 16QAM

Channel	Frequency (MHz)	Conducted Power (dBm)	G_T-L_C (dB)	EIRP (dBm)	EIRP (mW)	Limit (W)
649668	3745	26.52	1.5	28.02	633.87	1
656000	3840	26.47	1.5	27.97	626.61	1
662332	3935	26.44	1.5	27.94	622.3	1

CHANNEL BANDWIDTH: 90MHz 64QAM

Channel	Frequency (MHz)	Conducted Power (dBm)	G_T-L_C (dB)	EIRP (dBm)	EIRP (mW)	Limit (W)
649668	3745	26.68	1.5	28.18	657.66	1
656000	3840	26.55	1.5	28.05	638.26	1
662332	3935	26.5	1.5	28	630.96	1

CHANNEL BANDWIDTH: 90MHz 256QAM

Channel	Frequency (MHz)	Conducted Power (dBm)	G_T-L_C (dB)	EIRP (dBm)	EIRP (mW)	Limit (W)
649668	3745	25.62	1.5	27.12	515.23	1
656000	3840	25.45	1.5	26.95	495.45	1
662332	3935	25.36	1.5	26.86	485.29	1

CHANNEL BANDWIDTH: 100MHz Pi/2 BPSK

Channel	Frequency (MHz)	Conducted Power (dBm)	G_T-L_C (dB)	EIRP (dBm)	EIRP (mW)	Limit (W)
650000	3750	26.83	1.5	28.33	680.77	1
656000	3840	26.8	1.5	28.3	676.08	1
662000	3930	26.66	1.5	28.16	654.64	1

CHANNEL BANDWIDTH: 100MHz QPSK

Channel	Frequency (MHz)	Conducted Power (dBm)	G_T-L_C (dB)	EIRP (dBm)	EIRP (mW)	Limit (W)
650000	3750	26.7	1.5	28.2	660.69	1
656000	3840	26.59	1.5	28.09	644.17	1
662000	3930	26.43	1.5	27.93	620.87	1

CHANNEL BANDWIDTH: 100MHz 16QAM

Channel	Frequency (MHz)	Conducted Power (dBm)	G_T-L_C (dB)	EIRP (dBm)	EIRP (mW)	Limit (W)
650000	3750	26.6	1.5	28.1	645.65	1
656000	3840	26.54	1.5	28.04	636.8	1
662000	3930	26.46	1.5	27.96	625.17	1

CHANNEL BANDWIDTH: 100MHz 64QAM

Channel	Frequency (MHz)	Conducted Power (dBm)	G_T-L_C (dB)	EIRP (dBm)	EIRP (mW)	Limit (W)
650000	3750	26.71	1.5	28.21	662.22	1
656000	3840	26.61	1.5	28.11	647.14	1
662000	3930	26.52	1.5	28.02	633.87	1

CHANNEL BANDWIDTH: 100MHz 256QAM

Channel	Frequency (MHz)	Conducted Power (dBm)	G_T-L_C (dB)	EIRP (dBm)	EIRP (mW)	Limit (W)
650000	3750	25.64	1.5	27.14	517.61	1
656000	3840	25.52	1.5	27.02	503.5	1
662000	3930	25.41	1.5	26.91	490.91	1

REMARKS: ERP Output Power (dBm) = EIRP (dBm) -2.15(dB).

3.2 FREQUENCY STABILITY MEASUREMENT

3.2.1 LIMITS OF FREQUENCY STABILIITY MEASUREMENT

The frequency stability shall be sufficient to ensure that the fundamental emissions stay within the authorized bands of operation.

3.2.2 TEST PROCEDURE

a. Device is placed at the oven room. The oven room could control the temperatures and humidity. Power warm up is at least 15 min and power applied should perform before recording frequency error.
b. EUT is connected the external power supply to control the DC input power. The test voltage range is from minimum to maximum working voltage. Each step shall be record the frequency error rate.
c. The temperature range step is 10 degrees in this test items. All temperature levels shall be hold the ±0.5℃ during the measurement testing. The each temperature step shall be at least 0.5 hours, consider the EUT could be test under the stability condition.

NOTE: The frequency error was recorded frequency error from the communication simulator.

3.2.3 TEST SETUP

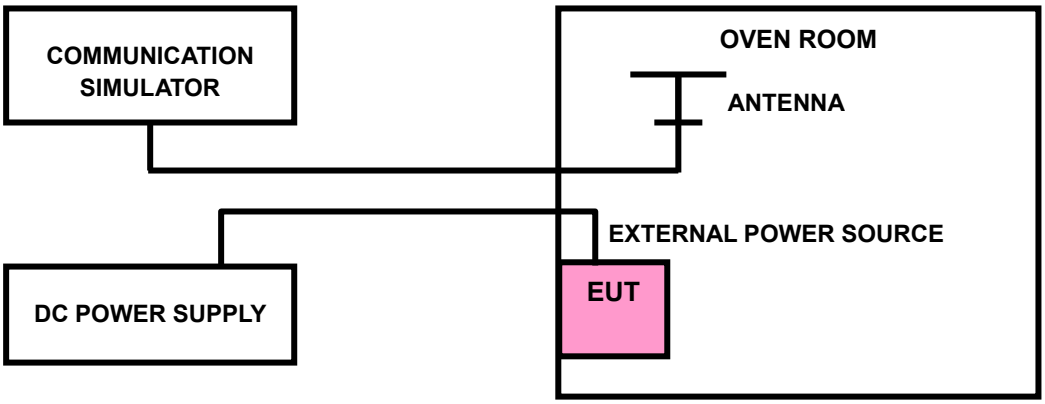

3.2.4 TEST RESULTS

Please Refer to Appendix F Of this test report.

3.3 OCCUPIED BANDWIDTH MEASUREMENT

3.3.1 LIMITS OF OCCUPIED BANDWIDTH MEASUREMENT

The width of a frequency band such that, below the lower and above the upper frequency limits, the mean powers emitted are each equal to a specified percentage 0.5 %of the total mean power of a given emission.

3.3.2 TEST SETUP

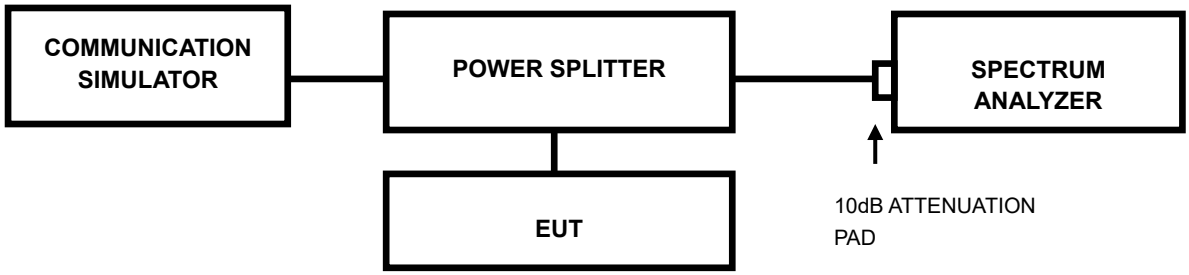

3.3.3 TEST PROCEDURES

a. The conducted occupied bandwidth used the power splitter via EUT RF power connector between simulation base station and spectrum analyzer.
b. Use OBW measurement function of Spectrum analyzer to measure 99 % occupied bandwidth.

3.3.4 TEST RESULTS

Please Refer to Appendix F Of this test report.

3.4 BAND EDGE MEASUREMENT

3.4.1 LIMITS OF BAND EDGE MEASUREMENT

According to FCC 27.53(g) specified that For operations in the 600 MHz band and the 698-746 MHz band, the power of any emission outside a licensee's frequency band(s) of operation shall be attenuated below the transmitter power (P) within the licensed band(s) of operation, measured in watts, by at least 43 + 10 log (P) dB. However, in the 100 kilohertz bands immediately outside and adjacent to a licensee's frequency block, a resolution bandwidth of at least 30 kHz may be employed.

According to FCC 27.53(h) specified that For operations in the 1710-1755 MHz band,the FCC limited is 43 + 10 log (P) dB , However, in the 1 megahertz bands immediately outside and adjacent to the licensee's frequency block, a resolution bandwidth of at least one percent of the emission bandwidth of the fundamental emission of the transmitter may be employed.

According to FCC 27.53(m)(4) specified that For mobile digital stations, the attenuation factor shall be not less than 40 + 10 log (P) dB on all frequencies between the channel edge and 5 megahertz from the channel edge, 43 + 10 log (P) dB on all frequencies between 5 megahertz and X megahertz from the channel edge, and 55 + 10 log (P) dB on all frequencies more than X megahertz from the channel edge, where X is the greater of 6 megahertz or the actual emission bandwidth as defined in paragraph (m)(6) of this section. In addition, the attenuation factor shall not be less that 43 + 10 log (P) dB on all frequencies between 2490.5 MHz and 2496 MHz and 55 + 10 log (P) dB at or below 2490.5 MHz. Mobile Satellite Service licensees operating on frequencies below 2495 MHz may also submit a documented interference complaint against BRS licensees operating on channel BRS Channel 1 on the same terms and conditions as adjacent channel BRS or EBS licensees. For mobile digital stations, in the 1 megahertz bands immediately outside and adjacent to the frequency block a resolution bandwidth of at least two percent may be employed.

According to FCC 27.53(l)(2) specified that For mobile operations in the 3700-3980 MHz band, the conducted power of any emission outside the licensee's authorized bandwidth shall not exceed −13 dBm/MHz. Compliance with this paragraph (l)(2) is based on the use of measurement instrumentation employing a resolution bandwidth of 1 megahertz or greater. However, in the 1 megahertz bands immediately outside and adjacent to the licensee's frequency block, the minimum resolution bandwidth for the measurement shall be either one percent of the emission bandwidth of the fundamental emission of the transmitter or 350 kHz. In the bands between 1 and 5 MHz removed from the licensee's frequency block, the minimum resolution bandwidth for the measurement shall be 500 kHz.

3.4.2 TEST SETUP

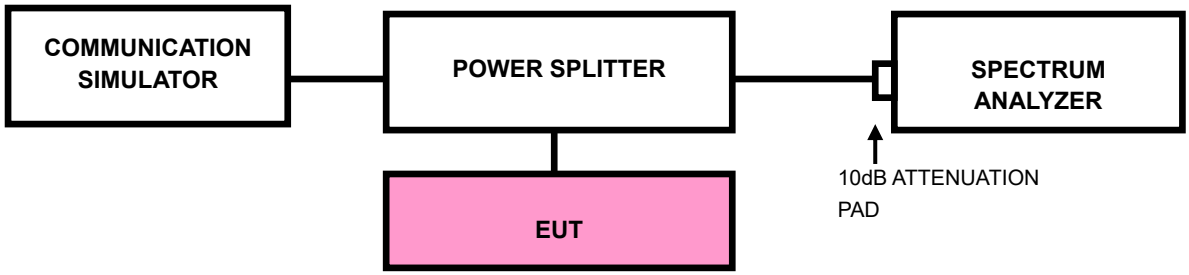

3.4.3 TEST PROCEDURES

a. All measurements were done at low and high operational frequency range.

b. The center frequency of spectrum is the band edge frequency and span is 1~5 MHz. RBW of the spectrum is ⩾1%*EBW kHz and VBW of the spectrum is 3*RBW kHz. (NR bandwidth 20MHz/30MHz/40MHz/50MHz/60MHz/70MHz/80MHz/90MHz100 MHz).

c. Record the max trace plot into the test report.

3.4.4 TEST RESULTS

Please Refer to Appendix F Of this test report.

3.5 CONDUCTED SPURIOUS EMISSIONS

3.5.1 LIMITS OF CONDUCTED SPURIOUS EMISSIONS MEASUREMENT

The power of any emission outside a licensee's frequency block shall be attenuated below the transmitter power (P) by at least 43 +10 log10(P) dB. The limit of emission is equal to -13dBm.

For 5G NR n41:

The power of any emission outside a licensee's frequency block shall be attenuated below the transmitter power (P) by at least 55 +10 log10(P) dB. The limit of emission is equal to -25dBm.

3.5.2 TEST PROCEDURE

a. The EUT makes a phone call to the communication simulator. All measurements were done at low, middle and high operational frequency range.

b. Measuring frequency range is from 9kHz up to a frequency including its 10th harmonic. 10dB attenuation pad is connected with spectrum. RBW=1MHz and VBW=3MHz is used for conducted emission measurement.

3.5.3 TEST SETUP

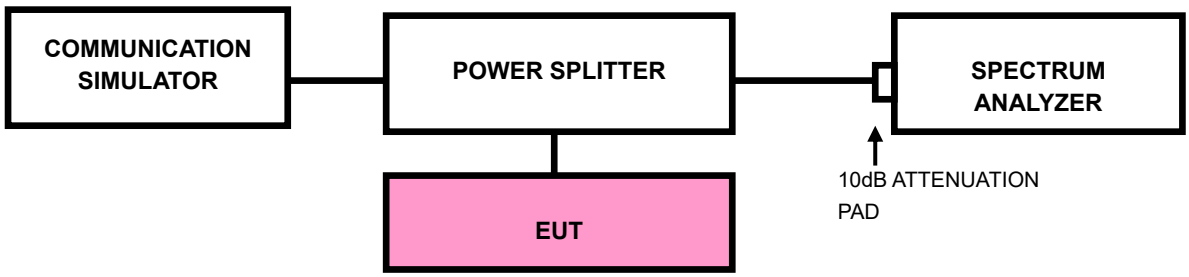

3.5.4 TEST RESULTS

NOTE ：The 9K~30MHz amplitude of spurious emissions attenuated more than 20 dB below the permissible value is not required in the report.

Please Refer to Appendix F Of this test report.

3.6 RADIATED EMISSION MEASUREMENT

3.6.1 LIMITS OF RADIATED EMISSION MEASUREMENT

The power of any emission outside a licensee's frequency block shall be attenuated below the transmitter power (P) by at least 43 +10 log10(P) dB. The limit of emission is equal to -13dBm.

For 5G NR n41:

The power of any emission outside a licensee's frequency block shall be attenuated below the transmitter power (P) by at least 55 +10 log10(P) dB. The limit of emission is equal to -25dBm.

3.6.2 TEST PROCEDURES

a. Substitution method is used for E.I.R.P measurement. In the semi-anechoic chamber, EUT placed on the 0.8m height of Turn Table, rotated the table around 360 degrees to search the maximum radiation power and receiver antenna shall be rotated vertical and horizontal polarization and moved height from 1m to 4m to find the maximum polar radiated power. The “Read Value” is the spectrum reading the maximum power value.
b. The substitution horn antenna is substituted for EUT at the same position and signals generator export the CW signal to the substitution antenna via a TX cable. Rotated the Turn Table and moved receiving antenna to find the maximum radiation power. Adjust output power level of S.G to get a Value of spectrum reading equal to “Read Value “ of step a. Record the power level of S.G.
c. EIRP = Output power level of S.G – TX cable loss + Antenna gain of substitution horn.
d. E.R.P power can be calculated form E.I.R.P power by subtracting the gain of dipole, E.R.P power = E.I.P.R power - 2.15dBi.

NOTE: The resolution bandwidth of spectrum analyzer is 1 MHz and the video bandwidth is 3 MHz.

3.6.3 DEVIATION FROM TEST STANDARD

No deviation

3.6.4 TEST SETUP

< Frequency Range below 30MHz >

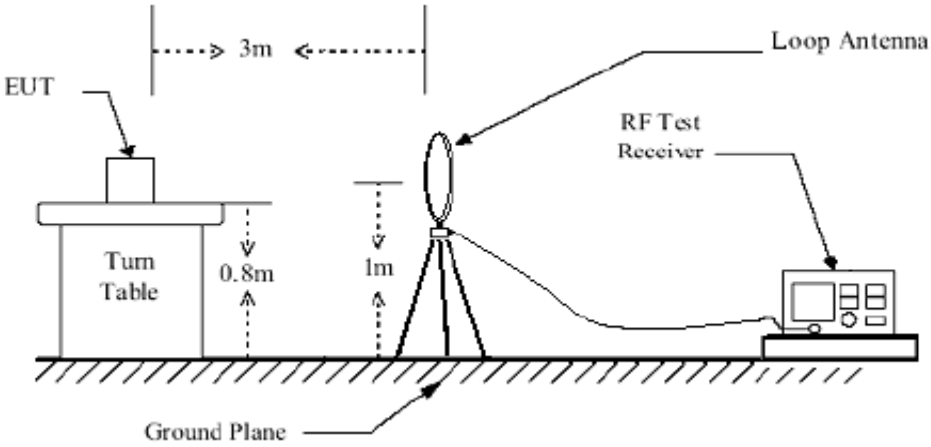
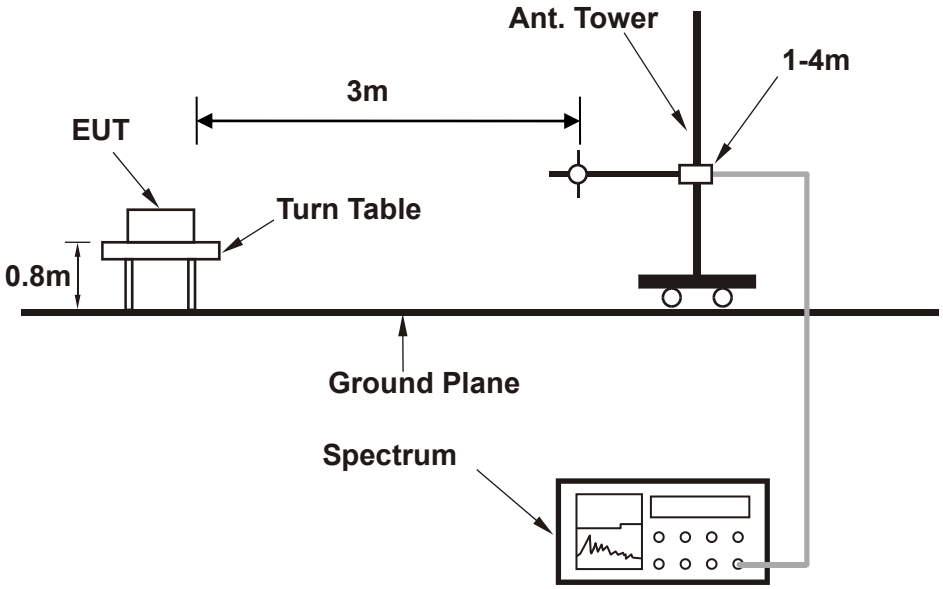
< Frequency Range 30MHz~1GHz >