Ready-to-Play® Series

Lionel O-Gauge Ready-to-Play® Train Set Owner's Manual

Adult assembly required
Batteries not included

⚠ WARNING:

CHOKING HAZARD-Small parts.
Not for children under 3 years.

IMPORTANT, RETAIN FOR FUTURE REFERENCE: READ CAREFULLY

Table of contents

FCC Statements	3
Compliance Statements	3
Joining the track sections	4
Layouts	4
Installing AAA batteries into the Wireless Controller	4
Installing 'AA' batteries into the General locomotive	5
Installing 'AA' batteries into the Diesel locomotive	6
Installing 'AA' batteries into the Thomas locomotive	7
Connecting the locomotive and train cars together	7
Power activation button on the locomotive	8
Operating your wireless controller	9
Adding water to your locomotive	10
Having trouble?	11
Lionel Limited Warranty Policy & Service	12

HiT entertainment

© 2024 HIT Entertainment Limited.
HIT and the HIT logo are trademarks
of HIT Entertainment Limited.

CREATED BY BRITT ALLCROFT

Based on The Railway Series by The Reverend W Awdry. © 2024 Gullane (Thomas) Limited.
Thomas the Tank Engine & Friends and Thomas & Friends are trademarks of Gullane (Thomas) Limited.

Details and colour of parts may vary. Subject to
availability. Confirms to safety requirements.

THOMAS & FRIENDS™

The following Lionel marks are used throughout this Owner's Manual and are protected under law. All rights reserved. Lionel®, Ready-to-Play®

FCC Statements

Warning: Changes or modifications to this unit not expressly approved by the party responsible for compliance could void the user's authority to operate the equipment.

NOTE: This equipment has been tested and found to comply with the limits for a Class B digital device, pursuant to Part 15 of the FCC Rules. These limits are designed to provide reasonable protection against harmful interference in a residential installation. This equipment generates, uses and can radiate radio frequency energy and, if not installed and used in accordance with the instructions, may cause harmful interference to radio communications.

However, there is no guarantee that interference will not occur in a particular installation. If this equipment does cause harmful interference to radio or television reception, which can be determined by turning the equipement off and on, the user is encouraged to try to correct the interference by one or more of the following measures:

- Reorient or relocate the receiving antenna.
- Increase the separation between the equipment and receiver.
- Consult the dealer or an experienced radio/TV technician for help.

This device complies with part 15 of the FCC Rules. Operation is subject to the following two conditions: (1) this device may not cause interference, and (2) this device must accept any interference, including interference that may cause undesired operation.

Engine
FCC: LIV-BATORX1
IC: 7032A-BATORX1

Remote
FCC: LIV-BATOTX1
IC: 7032A-BATOTX1

Compliance Statements

Compliance Notices
Devices equipped with the Water Vapor Smoke Effect comply with part 15 of the FCC Rules.

This device contains licence-exempt transmitter(s)/receiver(s) that comply with Innovation, Science and Economic Development Canada's licence-exempt RSS(s). Operation is subject to the following two conditions: (1) This device may not cause interference, and (2) This device must accept any interference, including interference that may cause undesired operation of the device.

CAN ICES-003 (B) / NMB-003 (B)

- **Do not mix alkaline, standard (carbon-zinc), or rechargeable (nickle-cadmium) batteries.**
- **Different types of batteries or new and used batteries are not to be mixed.**
- **Only batteries of the same or equivalent type as recommended are to be used.**
- **Batteries are to be inserted with correct polarity.**
- **Exhausted batteries are to be removed from the toy.**
- **The supply terminals are not to be short-circuited.**
- **Dispose of battery(ies) safely.**
- **Do not dispose of this product in a fire. The batteries inside may explode or leak.**
- **Non-rechargeable batteries are not to be recharged.**
- **Rechargeable batteries are to be removed from the toy before being charged.**
- **Rechargeable batteries are only to be used under adult supervision.**

Joining the track sections

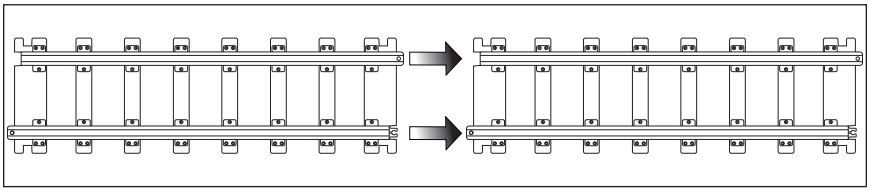

Layouts

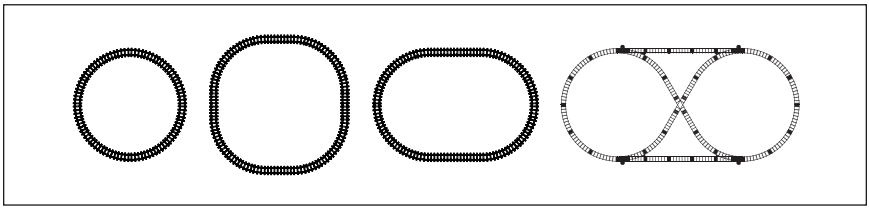

Installing AAA batteries into the Wireless Controller

Important! Use only Alkaline AAA batteries. Use only new batteries. Never mix new and used batteries or use different types of batteries together. **BATTERIES NOT INCLUDED.**

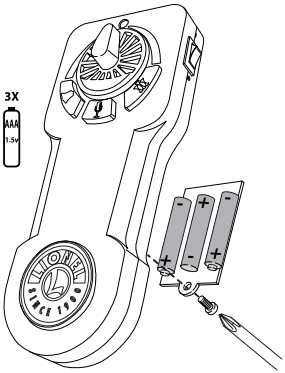

Important! **REMOVE ALL BATTERIES WHEN THE TRAIN WILL NOT BE USED FOR AN EXTENDED PERIOD OF TIME. LIONEL'S LIMITED WARRANTY DOES NOT COVER DAMAGE TO YOUR WIRELESS CONTROLLER CAUSED FROM LEAKING BATTERIES.**

Important! **When you are not operating the train, slide the On/Off switch to the OFF position to conserve the battery life.**

Important! Use Alkaline 'AA' batteries. Use only new batteries. Never mix new and used batteries or use different types of batteries together.

Important! Remove all batteries when the train will not be used for an extended period of time. Lionel's Limited Warranty does not cover damage to the locomotive caused from leaking batteries.

Note! **BATTERIES NOT INCLUDED**

Installing 'AA' batteries into the General Locomotive

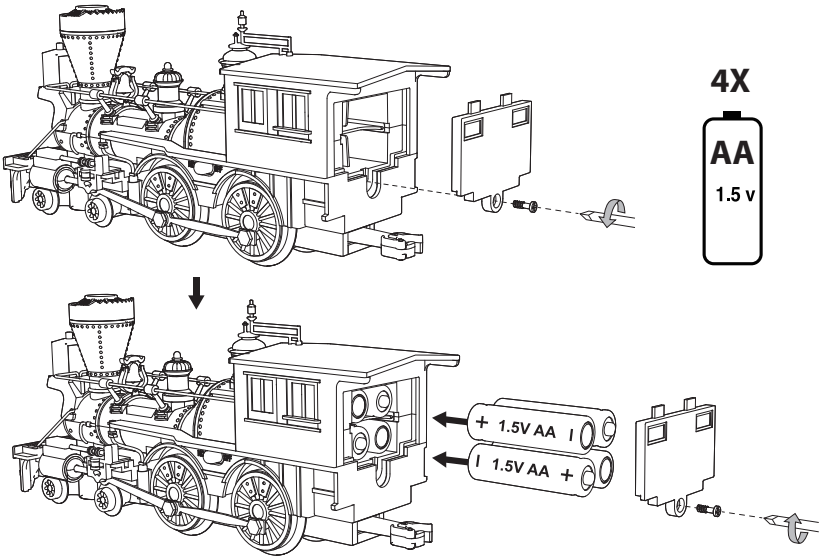

Note! **Once the batteries are loaded, the screw should be tightened all the way to ensure that the battery contacts stay in place between the battery holder and the spring contacts.**

Important! Use Alkaline 'AA' batteries. Use only new batteries. Never mix new and used batteries or use different types of batteries together.

Important! Remove all batteries when the train will not be used for an extended period of time. Lionel's Limited Warranty does not cover damage to the locomotive caused from leaking batteries.

Note! **BATTERIES NOT INCLUDED**

Installing 'AA' batteries into the Diesel Locomotive

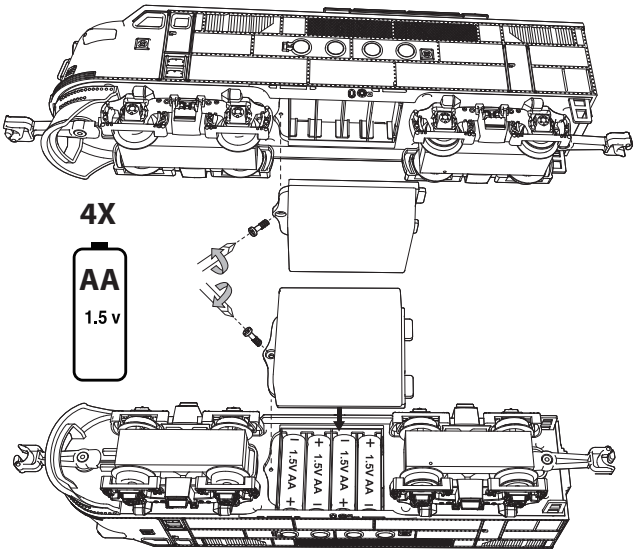

Note! **Once the batteries are loaded, the screw should be tightened all the way to ensure that the battery contacts stay in place between the battery holder and the spring contacts.**

Important! Use Alkaline 'AA' batteries. Use only new batteries. Never mix new and used batteries or use different types of batteries together.

Important! Remove all batteries when the train will not be used for an extended period of time. Lionel's Limited Warranty does not cover damage to the locomotive caused from leaking batteries.

Note! **BATTERIES NOT INCLUDED**

Installing 'AA' batteries into the Thomas Locomotive

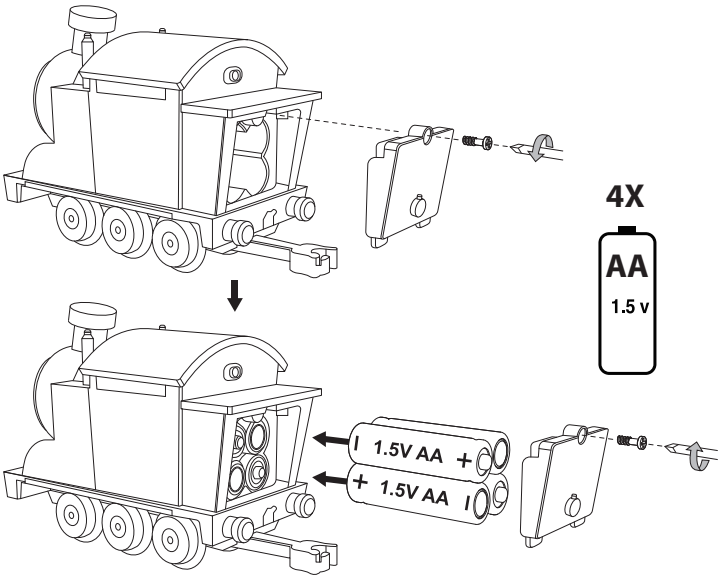

Note! **Once the batteries are loaded, the screw should be tightened all the way to ensure that the battery contacts stay in place between the battery holder and the spring contacts.**

Connecting the locomotive and train cars together

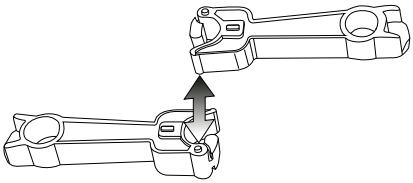

Power activation button on the locomotive

Note! The engine will beep until the remote turns on.

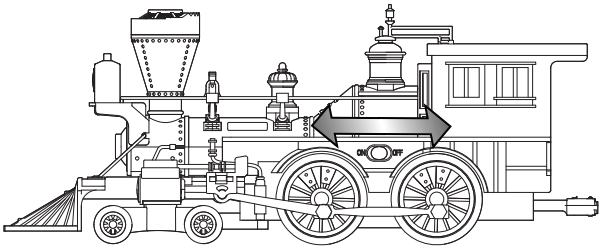

General

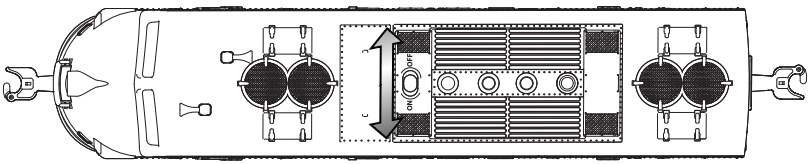

Diesel

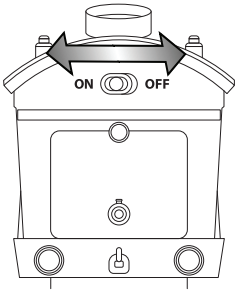

Thomas

Note! **LEAVING THE WIRELESS CONTROLLER POWER ON WHEN NOT IN USE WILL DRAIN THE CONTROLLER'S BATTERY.**

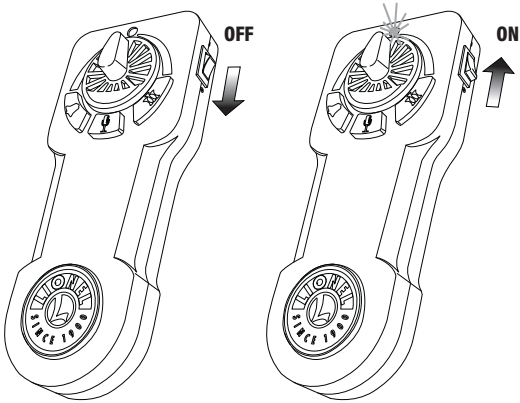

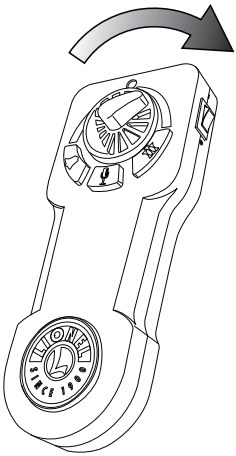

FORWARD

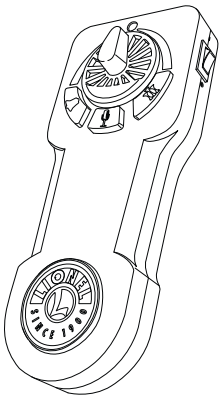

STOP

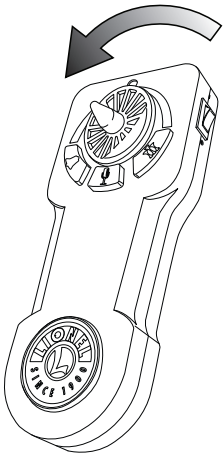

REVERSE

BELL

ANNOUNCEMENT

WHISTLE/HORN

Adding water to your locomotive

Water can be added to your locomotive's smokestack to create a water vapor smoke effect. Follow the instructions below.

Note! **The Water Vapor Smoke Effect only works on certain models of Lionel Battery Powered O-Gauge train sets.**

1. Locate the water dropper included with your train set.
2. Fill your dropper with water. Be sure to secure the cap when not in use to avoid a spill.
3. Locate the black plug positioned on the top of your engine's smokestack. **Avoid adding water to any other location on your engine's smokestack to avoid operational issues.**
4. Remove the black plug and begin by squeezing water into the smokestack until the water reaches the surface. Add this black plug back to its appropriate position when your train set is not in use. Refer to figure 1.
5. Turn on your engine as shown in figure 2.
6. Turn the dial on the remote to the Forward position to watch your train move around the track as it puffs smoke.

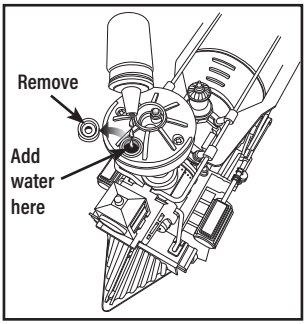

Figure 1. Add water to stack

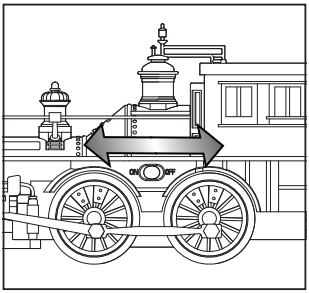

Figure 2. On/Off switch

Having Trouble?

1. There may be an air bubble in the smokestack. Try gently blowing into the stack to clear out air which may be trapped inside.
2. Your engine may need more water. Try adding 3-5 drops of water at a time until you begin to see a smoke effect appear.
3. If this issue persists, reach out to our customer care line at 1-800-4-LIONEL (454-6635) for assistance. Available Monday through Friday 9AM to 6PM EDT.

Remote FCC ID: LIV-BATOTX1
Engine FCC ID: LIV-BATORX1
This device complies with Part 15 of the FCC Rules. Operation is subject to the following two conditions: (1) this device may not cause harmful interference, and (2) this device must accept any interference received, including interference that may cause undesired operation.
Note: This equipment has been tested and found to comply with the limits for a Class B digital device, pursuant to Part 15 of the FCC Rules. These limits are designed to provide reasonable protection against harmful interference in a residential installation. This equipment generates, uses and can radiate radio frequency energy and, if not installed and used in accordance with the instructions, may cause harmful interference to radio communications. However, there is no guarantee that interference will not occur in a particular installation.
If this equipment does cause harmful interference to radio or television reception, which can be determined by turning the equipment off and on, the user is encouraged to try to correct the interference by one or more of the following measures:
-- Reorient or relocate the receiving antenna.
-- Increase the separation between the equipment and receiver.
-- Connect the equipment into an outlet on a circuit different from that to which the receiver is connected.
-- Consult the dealer or an experienced radio/TV technician for help.
Caution: Changes or modifications not expressly approved by the party responsible for compliance could void the user's authority to operate the equipment.
This equipment complies with FCC radiation exposure limits set forth for an uncontrolled environment. This transmitter must not be co-located or operating in conjunction with any other antenna or transmitter.

⚠ WARNING:

CHOKING HAZARD-Small parts.
Not for children under 3 years.

STOP

DO NOT RETURN TO STORE

For help with assembly or warranty service call our toll free number:

1-800-4-LIONEL (454-6635)

Monday through Friday
9AM to 6PM EDT
Language Spoken: English

This product is covered by a ONE year limited warranty effective from the date of purchase against defects in materials and workmanship.

©2024 LIONEL L.L.C., CONCORD, NC 28027
UNITED STATES OF AMERICA
PRINTED IN CHINA

MADE IN CHINA