BOM #: 05-MAN-9400-11-L-17 Size: 8.5” x 5.5” Date: 2016-6-30

7-11000 Ready-to-Play™ Series

Lionel Ready-to-Play™ Train Set Owner's Manual

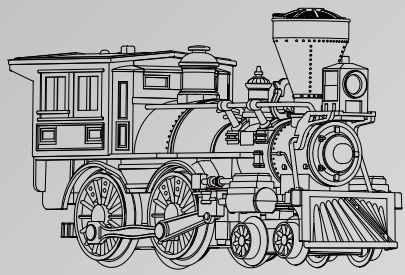

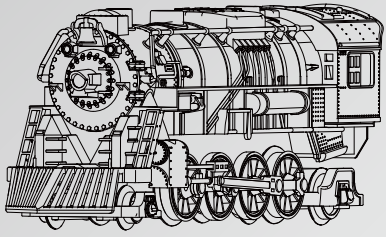

Adult assembly required
Batteries not included

⚠ WARNING:

CHOKING HAZARD-Small parts.
Not for children under 3 years.

Packaging contains important information and should be kept

Congratulations!

Congratulations on your purchase of this Lionel Ready-to-Play train set. This set features everything you need to get started – a wireless controller, a huge loop of easy-to-assemble track, a string of detailed cars, a tender and locomotive.

Read this instruction manual thoroughly for important tips on operating and maintaining your Ready-to-Play train set.

Set Inventory

- 1 Steam locomotive with head lamp, bell, and sounds
- 1 Tender
- 2 Rolling stock cars
- 24 Curved track sections
- 8 Straight track sections
- 1 Wireless controller
- 1 Owner's manual

FCC and RSS Statements

Warning: Changes or modifications to this unit not expressly approved by the party responsible for compliance could void the user's authority to operate the equipment.

NOTE: This equipment has been tested and found to comply with the limits for a Class B digital device, pursuant to Part 15 of the FCC Rules. These limits are designed to provide reasonable protection against harmful interference in a residential installation. This equipment generates, uses and can radiate radio frequency energy and, if not installed and used in accordance with the instructions, may cause harmful interference to radio communications.

However, there is no guarantee that interference will not occur in a particular installation. If this equipment does cause harmful interference to radio or television reception, which can be determined by turning the equipment off and on, the user is encouraged to try to correct the interference by one or more of the following measures:

- Reorient or relocate the receiving antenna.
- Increase the separation between the equipment and receiver.
- Consult the dealer or an experienced radio/TV technician for help.

This device complies with Part 15 of the FCC Rules. Operation is subject to the following two conditions: (1) this device may not cause harmful interference, and (2) this device must accept any interference received, including interference that may cause undesired operation.

This device complies with Industry Canada's Licence-exempt RSSs. Operation is subject to the following two conditions: (1) this device may not cause interference, and (2) this device must accept any interference, including interference that may cause undesired operation of the device.

Table of contents

Track assembly and layout

Joining the track sections 5
Layouts 6

Battery installation and options

Installing 'AAA' batteries into the wireless controller 7
Installing 'C' batteries into the locomotive 8-9

Operating your train

Connecting the locomotive and tender 10
The wireless controller 11-13
Power activation button on the locomotive 13

Maintenance and operations

Battery warning 14
Cleaning the track 14
Troubleshooting 15
Limited Warranty/Lionel Service 16

The following Lionel marks are used throughout this Owner's Manual and are protected under law. All rights reserved.

Lionel®, LionChief™, LionChief Plus™, LEGACY™, FasTrack®, TrainMaster®, Odyssey®, RailSounds®, CrewTalk™, TowerCom™, DynaChuff™, StationSounds™, Pullmor®, ElectroCoupler™, Magne-Traction®, CAB-1® Remote Controller, American Flyer®, Lionel ZW®, ZW®, MagniVision®, TMCC®, Lionelville®, Wireless Tether™, Powerhouse™, LionMaster®, Conventional Classics™, Postwar Celebration Series™, TruRail™, PH-1 Powerhouse®, Powermaster®, Powerstation-Powerhouse®, Accessory Motor Controller™, AMC™, Accessory Switch Controller™, ASC™, Action Recorder Controller™, ARC™, Track Power Controller 300™, TPC 300™, Track Power Controller 400™, TPC 400™, Block Power Controller™, BPC™, Operating Track Controller™, OTC™, FatBoy™, Lionel Lines®, Joshua Lionel Cowen Series™, Lockon®, TrainSounds™, MultiHorn™, MultiWhistle™, Choo-Choo™, SensorTrack™, Plug Expand Play™, Ready-to-Play™, Imagineering™

Track assembly and layout

Joining the track sections

Join the track sections together by placing them on a flat surface and inserting the plastic tabs of each track section into the corresponding openings of the next section. Press or squeeze the ties together to connect. This may require the help of an adult. Recheck all track connection points upon completing your layout to be sure they are secure.

To disassemble the track just lift one of the track sections slightly at an angle where they join together and they will snap apart. See Figure 1.

The rails should be kept clean, dry, and free from oil, grease, and dirt. Clean the track periodically with a clean soft cloth.

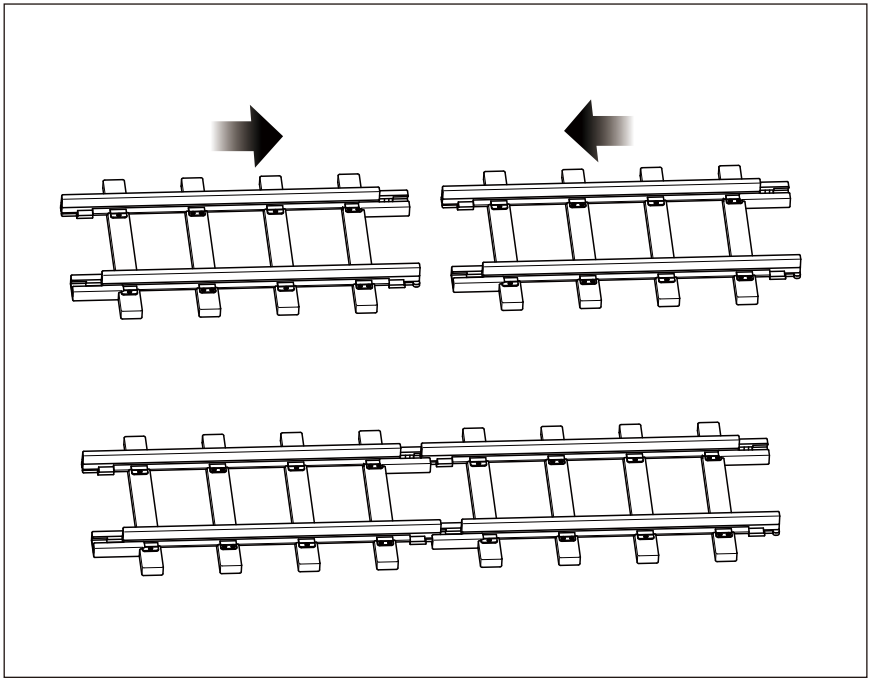

Figure 1. Assembling and disassembling the track

Track assembly and layout

Layouts

These are three possible layouts you can make with the track provided. See Figure 2.

Circle

- Connect all curved track sections

Extended Circle

- Make four ninety-degree curves by joining six curved sections each
- Connect the six-section ninety-degree curves with two straight section in between

Oval

- Make two half-circles using twelve curved sections for each. Make two long straight tracks using four sections each. Join the curves using the two long straight sections.

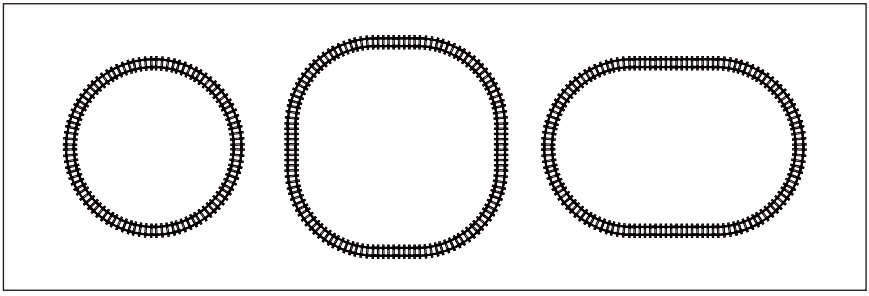

Figure 2. Possible track layouts

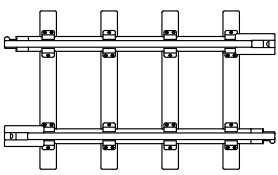

7-11826 Add-On Track 12-Pack
Straight (available separately)

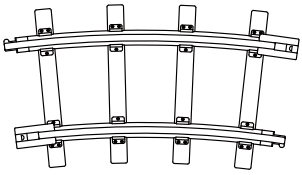

7-11827 Add-On Track 12-Pack
Curved (available separately)

Figure 3. Additional track is now available separately to create new layouts

Battery installation and options

Installing AAA batteries into the Remote Control

Using a Phillips Head screwdriver, have an adult loosen the screw on the battery compartment cover. Once the battery tray has been removed (as shown in figure 4) install 3 'AAA' Alkaline Batteries (not included). Please be sure the +/- of each battery is positioned properly in the battery compartment. Replace the battery door and tighten the Phillips head screw. Be careful to avoid over-tightening the screw.

Important! Use only Alkaline 'AAA' batteries. Use only new batteries. Never mix new and used batteries or use different types together.

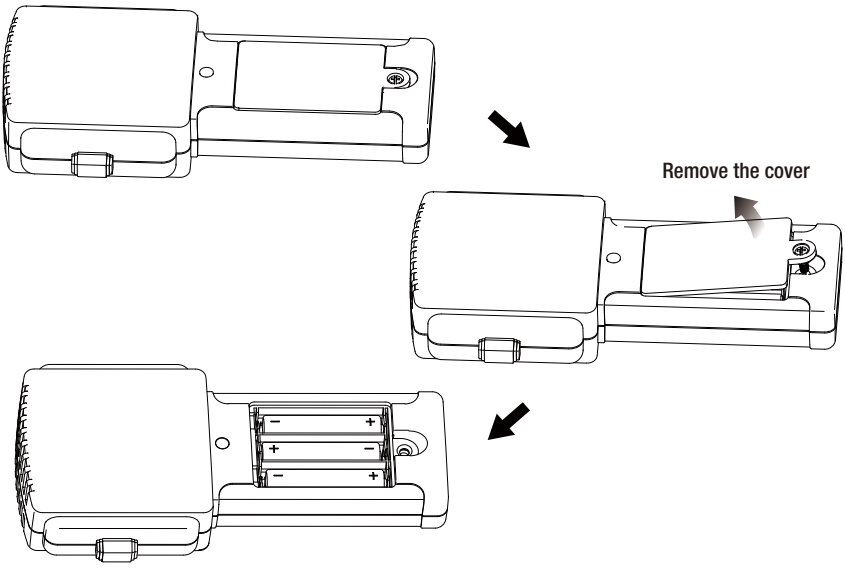

Figure 4. Opening and closing the battery compartment

Important! **REMOVE ALL BATTERIES WHEN THE TRAIN WILL NOT BE USED FOR AN EXTENDED PERIOD OF TIME. LIONEL'S LIMITED WARRANTY DOES NOT COVER DAMAGE TO YOUR REMOTE CAUSED FROM LEAKING BATTERIES.**

Important! **When you are not operating the train, slide the On/Off switch to the OFF position to conserve the battery life.**

Battery installation and options

Installing ‘C’ batteries into the Berkshire Locomotive

Using a Phillips Head screwdriver, have an adult loosen the screw on the battery compartment cover. Push down on the battery tray locking mechanism to allow the tray to slide out of the cavity inside the locomotive. Once the battery tray has been removed install 6 'C' Alkaline Batteries (not included). Please be sure the +/- of each battery is positioned as shown in the battery compartment. See Figure 5(a/b).

Important! Use Alkaline ‘C’ batteries. Use only new batteries. Never mix new and used batteries or use different types together.

Close the battery compartment by inserting the slot on the top end of the cab interior lid into the retaining rib. Then close the bottom end of the lid and secure by tightening the Phillips Head screw.

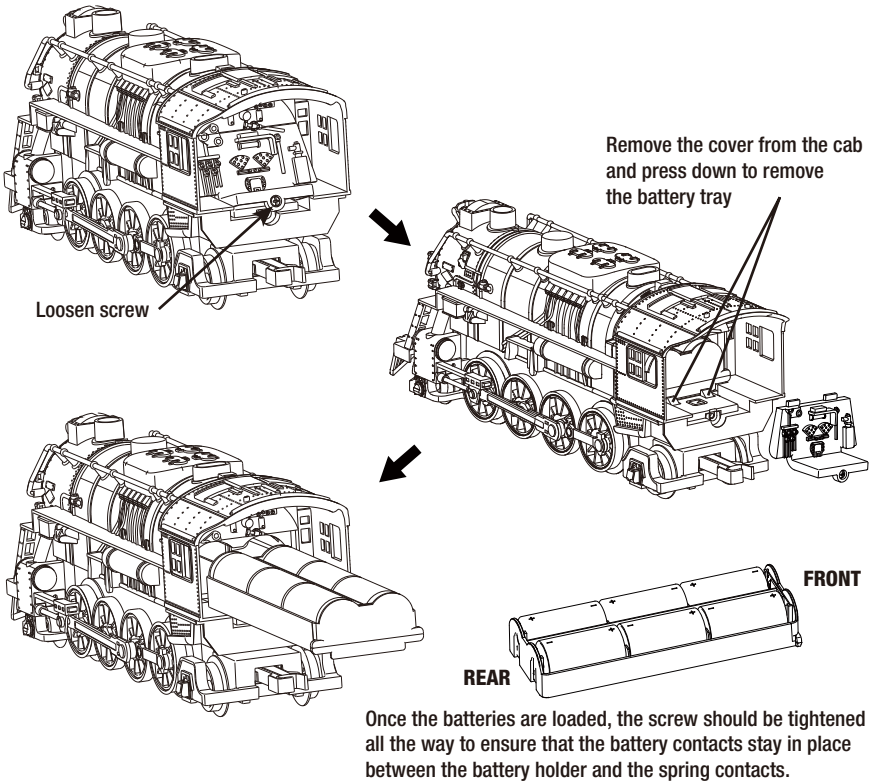

Berkshire Locomotive

Figure 5a. Installing ‘C’ batteries in the Berkshire Locomotive

Battery installation and options

Installing ‘C’ batteries into the General Locomotive

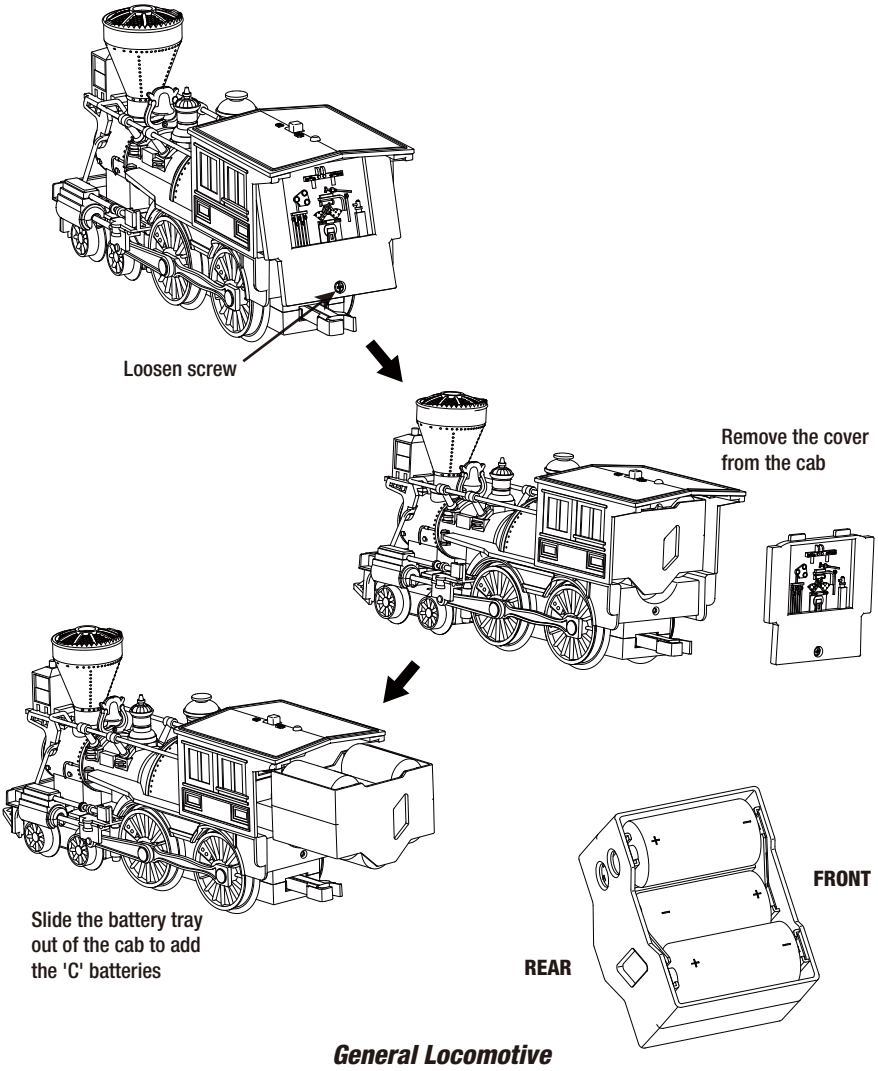

Figure 5b. Installing ‘C’ batteries in the General Locomotive

Important! **Remove all batteries when the train will not be used for an extended period of time. Lionel's Limited Warranty does not cover damage to the locomotive caused from leaking batteries.**

Operating your train

Connecting the locomotive and coal tender

Place the locomotive on the track first. Be sure that all the wheels are within the track rails.

Note! The locomotive will not turn on until the power switch at the top of the locomotive is slid to the ON position.

Place the tender on the track behind the locomotive and connect the couplers. Be sure that all the tender's wheels are on the track rails. See Figure 6.

Important! **Remove all batteries when the train will not be used for an extended period of time. Lionel's Limited Warranty does not cover damage to the locomotive caused from leaking batteries.**

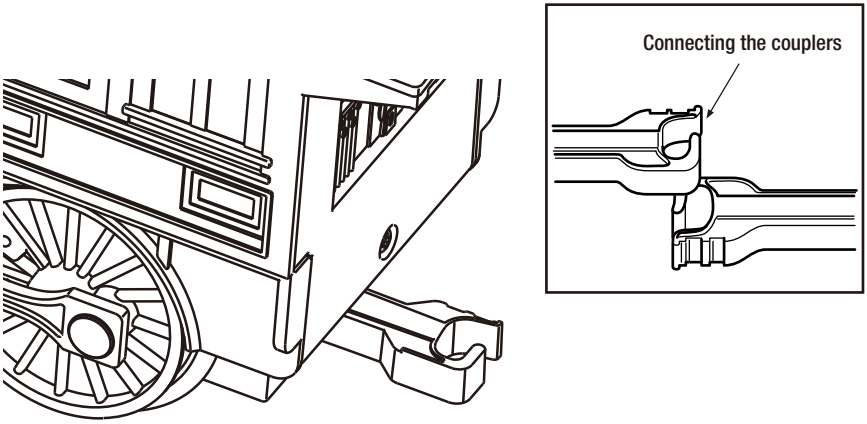

Figure 6. Connecting the locomotive and the other cars

Operating your train

The wireless controller

Turn the power switch on the side of the wireless controller to the up or ON position. The red LED at the top of the speed dial will illuminate to tell you the controller is on.

Turn the power switch on the wireless controller to the down or OFF position when not in use. The LED at the top of the dial will go out to indicate the power is off. See Figure 7.

Note! Leaving the wireless controller power ON when not in use will drain the controller's battery.

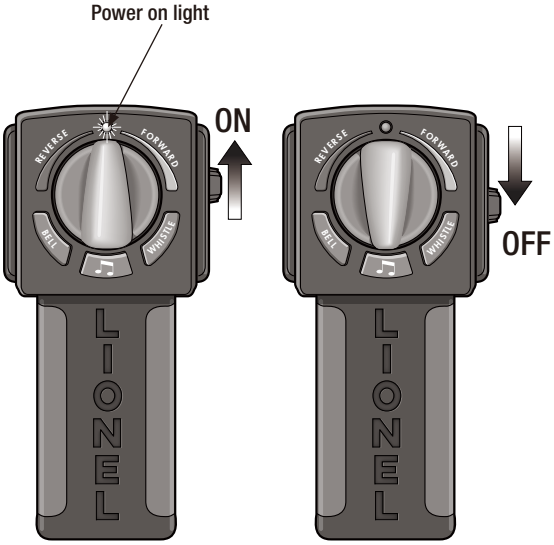

Figure 7. Using the wireless controller

Pairing the wireless controller to your Ready-to-Play™ train set

With the wireless controller turned off, turn the locomotive power switch to the "ON" position. The locomotive will produce a loud beeping sound, while the headlight will be off, and the cab light is blinking on and off.

Turn the wireless controller on. The locomotive sounds will turn on, the headlight will illuminate, and the cab light will turn off as long as the train is stopped (at idle).

Note! If the controller is turned on PRIOR to the locomotive, the LED on the remote will blink on and off. Once the remote pairs with the locomotive, the LED on the controller will turn solid if the position of the dial is in the neutral/idle position and the knob is facing up. The locomotive sounds will come alive as described above.

Operating your train

Operating your wireless controller

Turn your wireless controller to the ON position by sliding the button on the right side of the controller up. An LED on top of the dial will light to indicate the power is on (See Figure 7 on page 11). See Figure 8 on page 13 for button operations.

Forward

Turn the throttle dial to the right towards GREEN. There are three speeds in the forward position and the more you turn the dial along the green arrow, the faster the train will run. The flashing rate of the LED will be consistent with the speed. The 3 speeds are slow (slow blink), medium (medium blink) and fast (fast blink). Once the locomotive begins to move, the cab light will turn on and stay on as long as the locomotive is moving.

Stop

Turning the dial to the top will stop the train. Note that it may take up to several seconds for the train to come to a complete stop depending on how fast it was going. Make sure to bring the train to a complete stop before changing direction.

Reverse

Turn the dial towards the blue REVERSE position to have the train move in reverse. Again, there are three speeds in the reverse position. The more you turn the dial along the blue arrow, the faster the train will go. The flashing rate of the LED will be consistent with the speed.

Bell

Pressing the BELL button activates the locomotive's bell sound.

Center Button with Music Note *(Depending on which set purchased)*

Pressing the center button marked with a music note activates a special announcement when stopped and another announcement when moving.

Whistle

Pressing the WHISTLE button activates the locomotive's whistle.

Note! If the locomotive power switch is turned off while the locomotive is moving, it will stop. The LED on the controller will begin to blink slowly, signifying it has lost communication with the locomotive.

If the controller is turned off while the train is running the locomotive will slow down and stop. The headlight will turn off, cab light will begin flashing and a loud beeping sound will begin playing (notifying the operator to slide the power switch to the “OFF” position to conserve battery life).

Note! Leaving the Wireless Controller power ON when not in use will drain the controller’s battery.

Operating your train

Operating your wireless controller continued

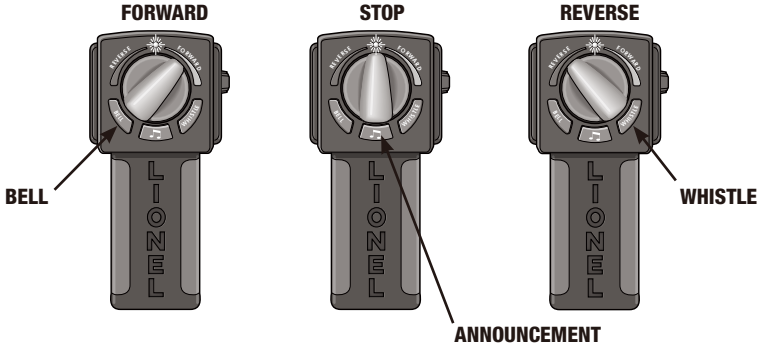

3 BUTTON WIRELESS CONTROLLER

Figure 8. Operating your *3 Button* Wireless Controller

Power activation button on the locomotive

Slide the locomotive power switch to the ON position. The locomotive cab light will blink and an audible beeping sound will come on to indicate it is looking for controller pairing.

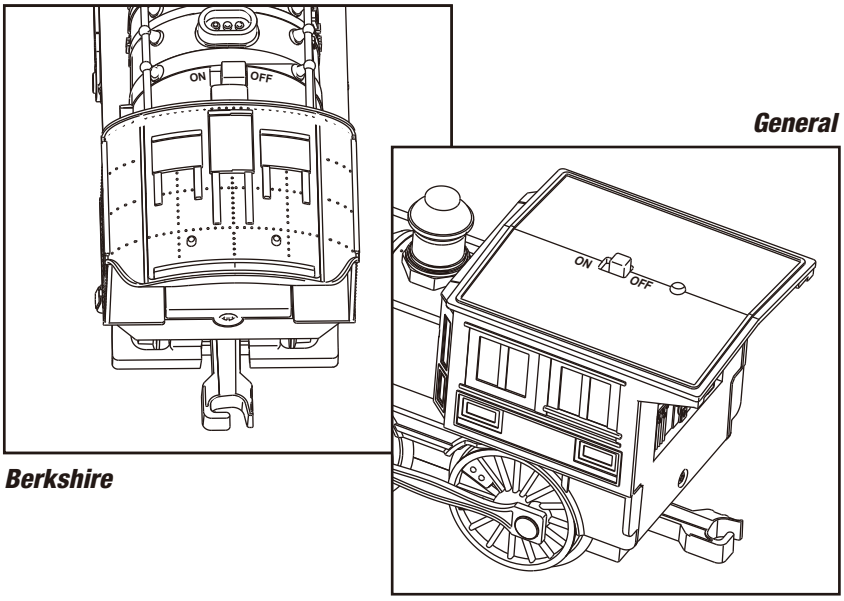

Figure 9. Power Activation Button

Maintenance and operations

IMPORTANT : BATTERY INFORMATION

Please retain this information for future reference.
Batteries should be replaced by an adult.

⚠ CAUTION:

- **Do not mix alkaline, standard (carbon-zinc), or rechargeable (nickel-cadmium) batteries.**
- **Different types of batteries or new and used batteries are not to be mixed.**
- **Only batteries of the same or equivalent type as recommended are to be used.**
- **Batteries are to be inserted with correct polarity.**
- **Exhausted batteries are to be removed from the toy.**
- **The supply terminals are not to be short-circuited.**
- **Dispose of battery(ies) safely.**
- **Do not dispose of this product in a fire. The batteries inside may explode or leak.**
- **Non-rechargeable batteries are not to be recharged.**
- **Rechargeable batteries are to be removed from the toy before being charged.**
- **Rechargeable batteries are only to be used under adult supervision.**

Cleaning the track

It is very important to keep the track and wheels free from dirt and grease. Wipe them with a soft cloth whenever they get dirty. This will help the locomotive run more efficiently.

Maintenance and operations

Troubleshooting

The train will not run and the locomotive light is not on. The locomotive cab light is blinking.

1. Check to see if the wireless controller is in the OFF position.
2. After checking the above and if the light is still not on replace the 6 'C' batteries in the locomotive. Be sure the batteries are oriented as indicated in the battery compartment (see page 8 and 9). After replacing the batteries, slide the switch to the ON position.

The train will not run but the engine headlight and sounds are on.

1. Check to make sure the wireless controller power switch is in the ON position. This will be indicated by the red LED being illuminated.
2. Try moving the controller closer to the locomotive. Although designed for an optimal range of 10 feet, the signal can be weakened by a metal object or other interference.
3. Be sure the controller is not lying flat on the floor and the controller is positioned above the level of the train.
4. Replace the 3 'AAA' batteries in the controller (see page 7). Be sure that the batteries are oriented as indicated in the battery compartment.

The train will not run and the cab light is flickering.

1. Check to see if your wireless controller's power light is on. Give the train a new command such as the whistle button. If the lamp remains flickering and the whistle will not sound, either your locomotive or controller needs repair. If the cab light changes to a steady white glow and the whistle does not sound, your locomotive needs repair. Please contact Lionel service. See page 16.

The train runs, but the wheels slip on the track.

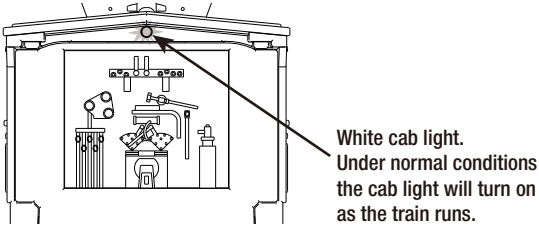

1. Check the top of the track rails and rubberized drive wheels for dirt or grease. Clean with a soft dry or slightly dampened cloth.
2. Check to see that all of the wheels of both the locomotive, tender and cars are located properly on the track.

QUESTIONS?

Consumer Assistance:

586-949-4100 option 2

This product is covered by a ONE year limited warranty effective from the date of purchase against defects in materials and workmanship.

©2016 Lionel L.L.C., Concord, NC 28027
United States of America
Printed in China