# USER GUIDE
# SYSTEM 3
# SYSTEM 21

All references to System 3 apply to System 21 unless otherwise stated

## MAIN SYSTEM COMPONENTS

Two Remote Transmitters
Installed Control Unit
Customising Wires
Installed Protective Trigger Switch
Installed In-Line Fuse and Spare Fuse
Installed LED Alarm Indicator
Warning Labels

## WARNING

UNAUTHORISED ALTERATIONS OR ADDITIONS MAY INVALIDATE THE WARRANTY AND CERTIFICATE OF INSTALLATION

DATATOOL

**even if you read nothing else - READ THESE 2 POINTS!**

### ALWAYS CARRY A SPARE IN-LINE FUSE

Make sure your installer advises you of the location of the in-line fuse. If the fuse fails, your motorcycle will be immobilised until it is replaced.

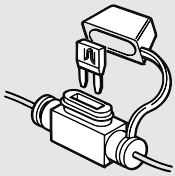

Set your own individual
### PIN OVERRIDE

This will let you disarm the system if you lose the remote transmitter.

0000

See pages 6 to 8

**KEEP WITH YOUR MOTORCYCLE IN PLASTIC BAG PROVIDED**

02005084
06/2003

Part of the TOAD group of companies

## INITIAL OPERATION - STANDARD MODE

When you collect your motorcycle, the Datatool System will be armed in STANDARD MODE. In this mode the system arms automatically, 30 seconds after you switch off the ignition. Before moving or starting your motorcycle, You will need to DISARM the system.

## TO DISARM THE SYSTEM

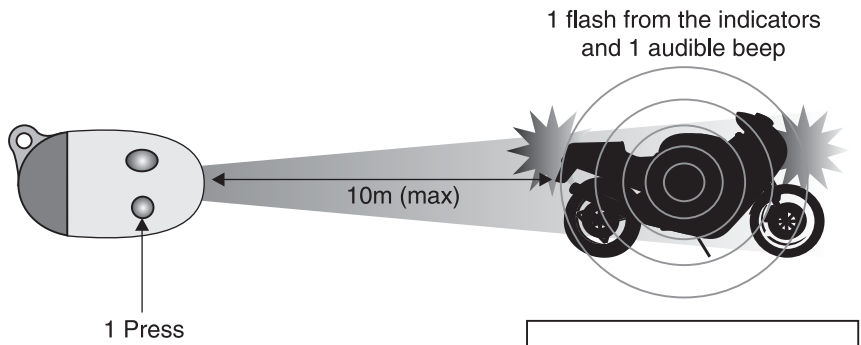


The system will arm again automatically after 30 seconds if the ignition isn't turned ON.

**LED** OFF

## TO ARM THE SYSTEM

The system will arm automatically 30 seconds after the ignition is switched OFF, or you can arm the system manually before this time.

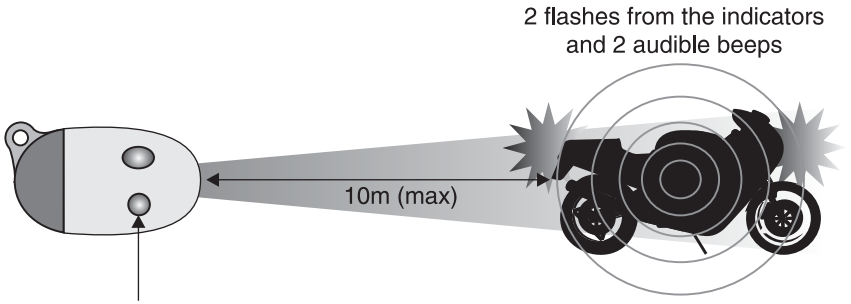


**LED** ON 5 seconds, then flashing

## FULL ALARM REACTION

Once triggered, the audible alarm will sound and the indicators will flash for 30 seconds, the alarm will then switch off and reset automatically (See Diagnostic Mode). To switch OFF the alarm manually, use the transmitter.

## OPERATION OVERVIEW

Four elements of the motorcycle are monitored and will initiate a full reaction if any of the following occurs.

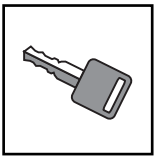

**IGNITION CIRCUIT**

If the circuit is hotwired, or the ignition is forced.

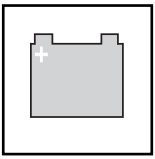

**BATTERY CIRCUIT**

If any part of the circuit becomes live, or the battery connection is cut.

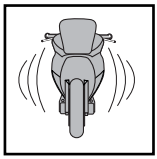

**MOVEMENT**

If the motorcycle is moved or nudged (with movement/ nudge detection on).

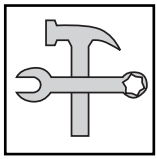

**TAMPER**

If there is any attempt to gain access to the alarm control unit.

## MOVEMENT/NUDGE DETECTION

In normal setting, movement/nudge detection is enabled automatically when the system arms. Warning beeps will sound if the motorcycle is nudged or moved, too many beeps within a certain time will initiate a full reaction.

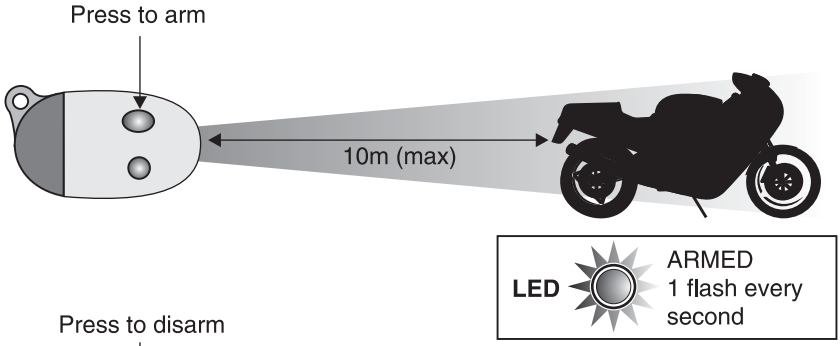


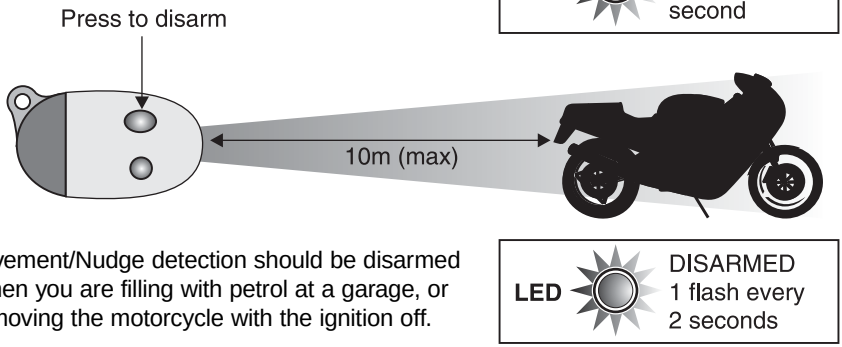


Movement/Nudge detection should be disarmed when you are filling with petrol at a garage, or moving the motorcycle with the ignition off.

**NEVER LEAVE THE MOTORCYCLE UNATTENDED WHEN MOVEMENT/NUDGE DETECTION IS DISABLED**

## OPERATION - SERVICE/VALET MODE

Engage Service Mode when you wish to service or clean your motorcycle, or remove the motorcycle battery.

In service mode an audible beep will be heard every 15 seconds

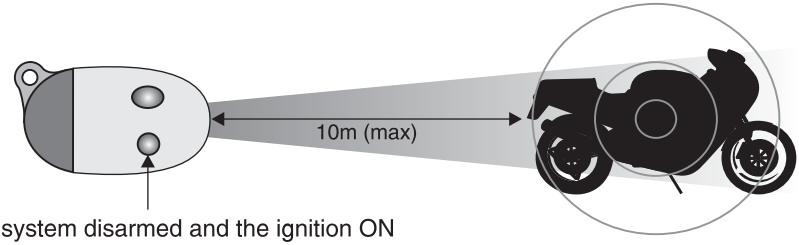


With the system disarmed and the ignition ON press and hold until an audible beep is heard, the ignition can now be switched OFF

Press to leave service mode

**IMPORTANT**

If after entering service/valet mode you get more than one audible beep every 15 seconds, the system has been triggered in your absence and you have automatically entered diagnostic mode (see diagnostics table on page 9).

**YOUR MOTORCYCLE IS COMPLETELY UNPROTECTED IN SERVICE MODE**

**IMPORTANT**

**Protective Trigger Switch**

A Protective Trigger Switch is fitted to protect the System Control Unit from access eg: under the seat, side panel or petrol tank. In normal operation, if this is tampered with a full alarm reaction will be initiated.

In Service Mode, the Protective Trigger Switch is disarmed allowing access to the area protected by it.

Protective Trigger Switch

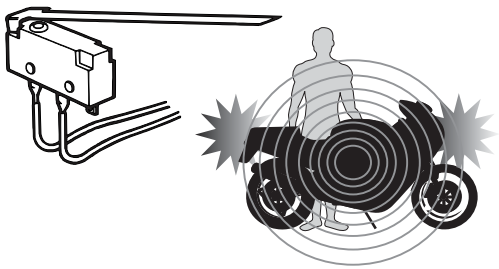

Full Alarm Reaction

## HAZARD WARNING LIGHTS

A hazard warning lights function is included.

**NOTE:**

When entering Hazard Warning Lights Mode, the hazard warning lights flash 5 times then stop. The motorcycle battery is too low to maintain this mode.

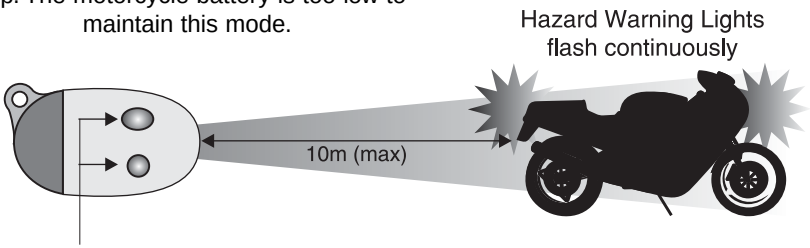


To switch off the hazard warning lights, but leave the system armed, press both buttons together for 3 seconds.

To switch off the hazard warning lights, and disarm the system, press the round button.

## SLEEP MODE

If the level of charge in your motorcycle battery drops, the system will go into Sleep Mode conserving remaining power.

**NOTE:** If the system does not come out of sleep mode in the normal way, hold the transmitter button down, at the same time turn on the ignition.

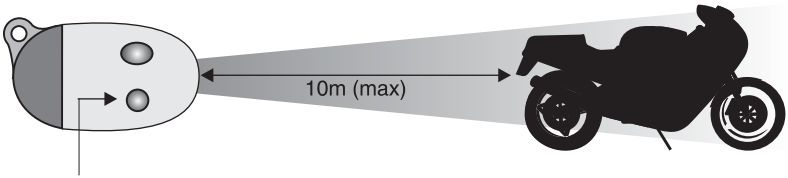


To bring the system out of Sleep Mode
Press and hold until alarm disarms
(15 seconds max)

## RIDER OPTION - Siren Tone Selector

You can choose one of eight individual siren tones.

**Step 2**
Press for 3 seconds, Press again for tones 2, 3, 4, 5, 6, 7, 8.

The siren tone will be subdued during the selection process.

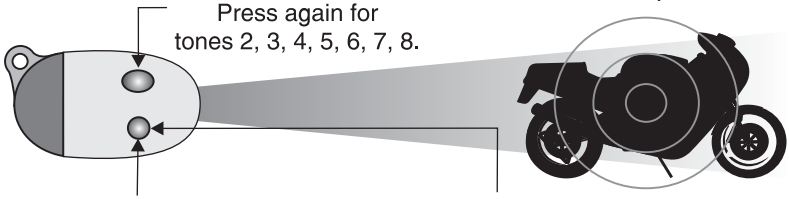

**Step 1**
Engage Service Mode (hold for 2 seconds) and leave ignition ON

**Step 3**
Turn ignition OFF and press to accept selected tone

## RIDER OPTION - Arming the system without Movement/Nudge Function

The System can be programmed to arm with the movement/nudge function disarmed (Ferry Mode). This is achieved by securely grounding the Yellow wire.

**NOTE:** If you arm the system manually with the transmitter (within 30 seconds of turning the ignition off) the system will arm with movement/nudge function armed.

Movement/nudge detection can be switched ON/OFF at any time with the transmitter when the system is armed.

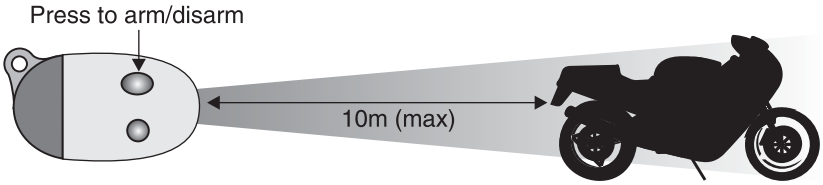


**LED** DISARMED 1 flash every 2 seconds

**LED** ARMED 1 flash every second

## RIDER OPTION - Arming/Disarming the system in Silent Mode

The System can be programmed to arm/disarm in silent mode. This is achieved by securely grounding the white wire.

## PIN OVERRIDE - INITIAL PIN ENTRY

If your transmitter is lost or damaged, or the transmitter battery is flat, the System can be overriden by a four digit PIN (Personal Identity Number) used in conjunction with the ignition switch. The System is supplied without a PIN.

**We recommend that you set your own individual four digit PIN as soon as possible. The first time a new PIN is entered, you must have access to the in-line fuse.**

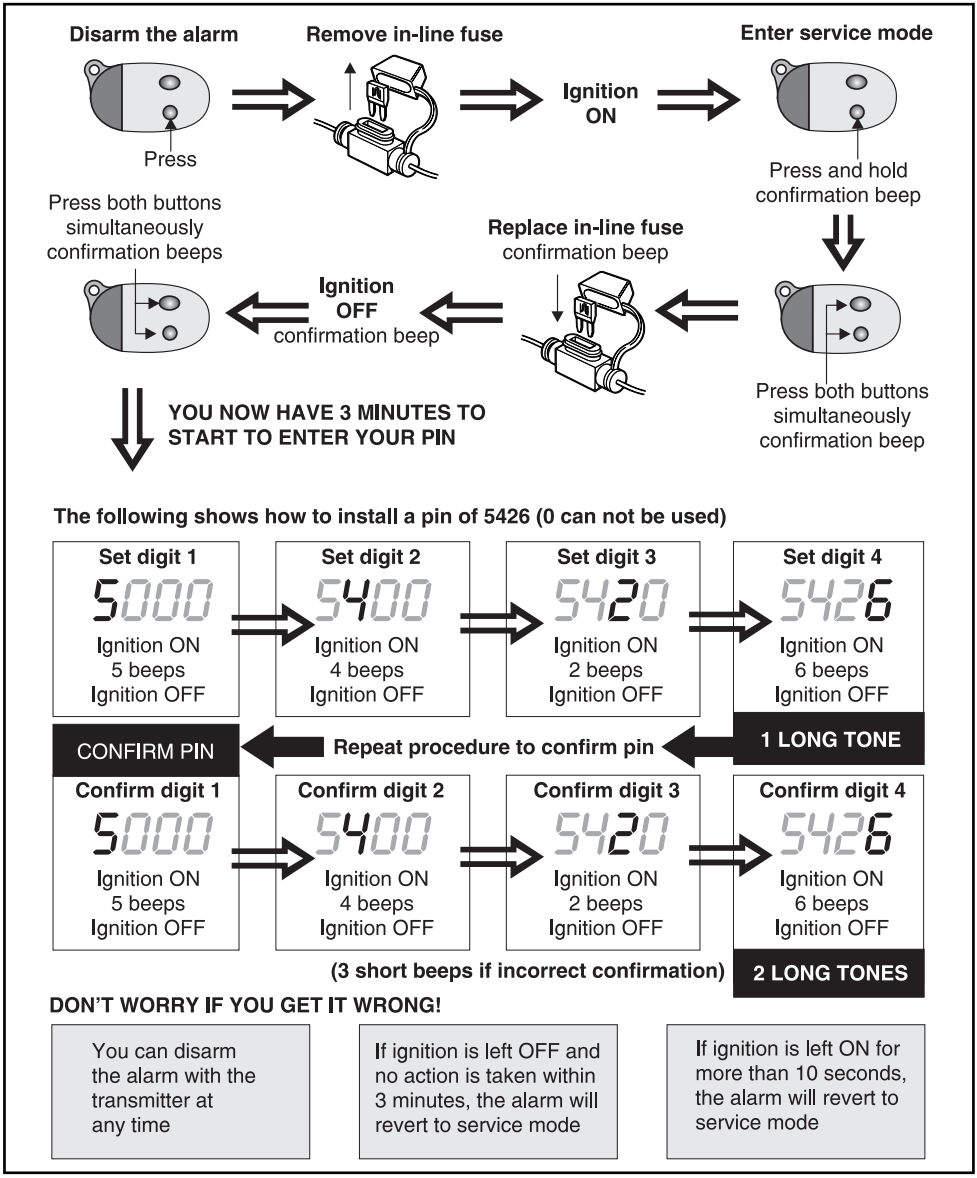

# PIN OVERRIDE - CHANGE PIN

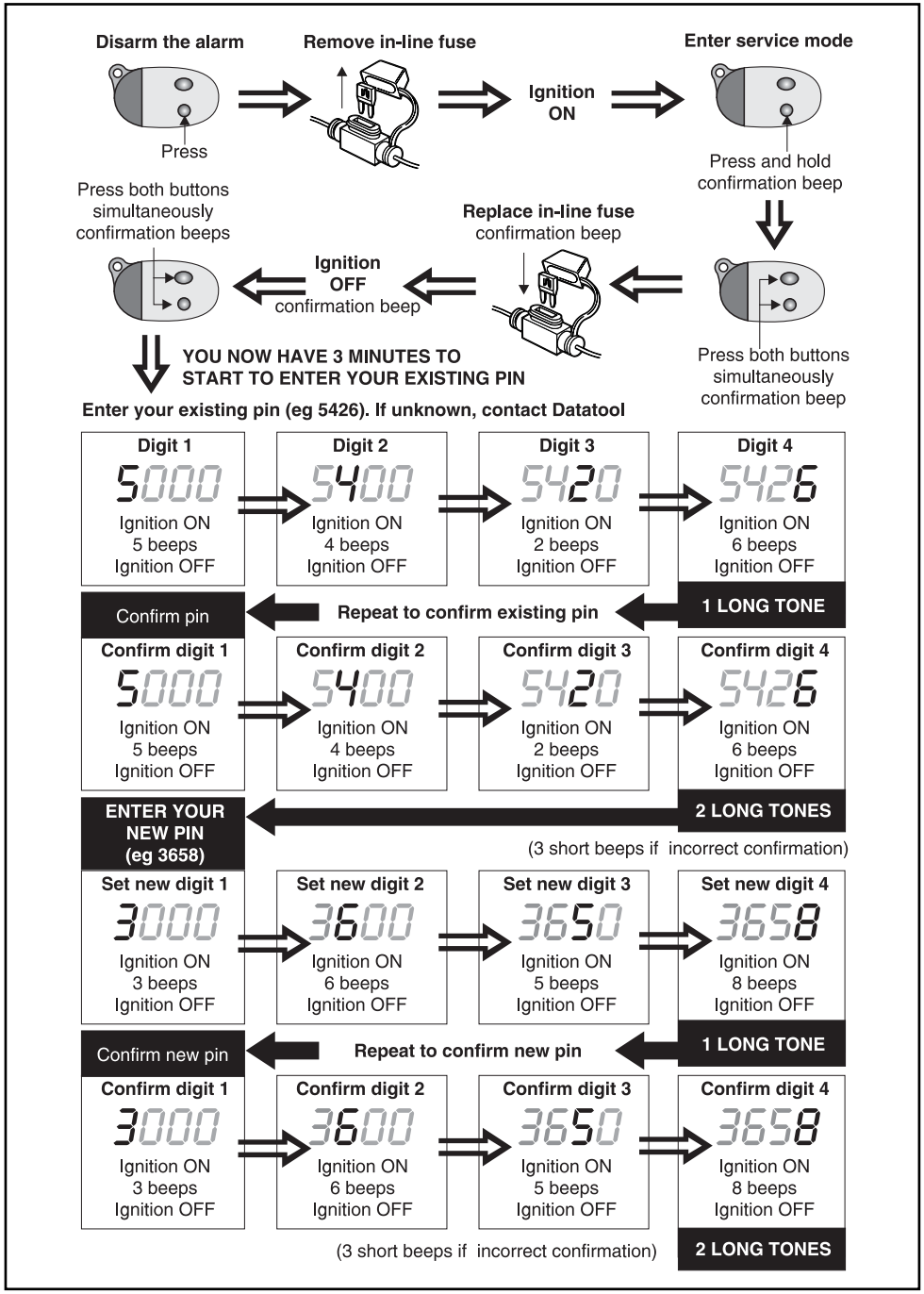

If your transmitter is lost or damaged, or the transmitter battery is flat, the System can be overriden by your four digit PIN used in conjunction with the ignition switch.

The PIN facility can only be used after a full alarm reaction has been initiated.

Initiate full alarm reaction by turning the ignition ON and leaving it ON

Full Alarm Reaction for 30 seconds

When alarm reaction stops Motorcycle LED will be CONSTANT for 5 seconds

**During this 5 second interval turn ignition OFF and ON**

## THE OVERRIDE PROCEDURE WILL START IMMEDIATELY AFTER THE IGNITION IS TURNED ON...

**Your individual 4 digit pin is entered as follows:**

**DIGIT 1** - Count 5 beeps then turning the ignition off.

**DIGIT 2** - Count 4 beeps then turning the ignition off.

**DIGIT 3** - Count 2 beeps then turning the ignition off.

**DIGIT 4** - Count 6 beeps then turning the ignition off.

IN THIS EXAMPLE THE PIN IS 5426

5000
5 beeps - Ignition OFF

5400
Ignition ON - 4 beeps
Ignition OFF

5420
Ignition ON - 2 beeps
Ignition OFF

5426
Ignition ON - 6 beeps
Ignition OFF

**LED**

If entered correctly the alarm will disarm and the motorcycle LED will flash once

**YOU NOW HAVE 30 SECONDS TO TURN THE IGNITION ON AND START THE MOTORCYCLE**

**Until your transmitter is replaced or repaired, this procedure must be repeated to disarm the system every time it arms.**

**Entering an incorrect PIN will initiate a full alarm reaction.**

**Carry your spare in-line fuse and transmitter when touring.**

# SYSTEM REACTION DIAGNOSTICS

## Reaction Indication

If the system has been triggered in your absence, a long audible tone will be heard when the alarm is disarmed with the transmitter. If you wish to establish the reason for the alarm being triggered, enter Service Mode and count the number of beeps emitted from the alarm (see diagnostics table below).

**To return to service mode - disarm the system (see page 1) and re-enter service mode (see page 3).**

## Alarm Reaction Diagnostics

| Number of Beeps | Reason for alarm being triggered |
|---|---|
| 2 | Power Failure (Alarm)<br>Fuse failed<br>Wires cut |
| 3 | Hot wire detection (possible theft)<br>Ignition tampered with |
| 4 | Movement detection<br>Motorcycle has been moved |
| 5 | Nudge detection<br>Motorcycle has been nudged too many times |
| 6 | Tamper circuit<br>Protective trigger switch has been initiated |

**ALWAYS CARRY A SPARE IN-LINE FUSE**

Make sure your installer advises you of the location of the in-line fuse. If the fuse fails your motorcycle will be immobilised until it is replaced.

If the replacement fuse blows repeatedly, or you continue to experience difficulties consult your dealer.

**IMPORTANT (System 3 only)**

If there is a failure within the control unit, or if the unit detects spurious or missing signals from the motorcycle, the alarm control unit will not immobilise the motorcycle until the ignition is switched OFF.

**The motorcycle will not start again until the "fault" has been rectified.**

| | |
|---|---|
| **System doesn't disarm or arm manually** | • Check the ignition switch is in the **OFF** position.<br>• Check the system fuse.<br>• Check that you are within range of the motorcycle (10m max.).<br>• Under rare circumstances, the transmitter operational range can be affected by radio interference from other sources. This problem can be overcome by moving the transmitter closer to the motorcycle. In extreme circumstances when the interference is so strong that the transmitter will not function, the system can be disarmed using your PIN.<br>• Check the condition of the transmitter battery (see transmitter battery state - maintenance). |
| **Starter motor fails to function (System 3 only)** | • Check (where applicable) that engine 'Run/Stop' switch is in the 'run' position, side stand is up and motorcycle is not in gear.<br>• Check the motorcycle battery is in good condition.<br>• Check the system fuse (NB: if the indicators do not function when arming/disarming or during reaction, this indicates a failed fuse or lack of power supply/earth to alarm system).<br>• Check that the system will engage Service Mode. If not, check all motorcycle fuses as this indicates that the system is not receiving an "ignition on" signal. |
| **False alarms can be initiated by the following** | • Failure of the system fuse (see above).<br>• Movement/Nudge detection too sensitive, ask your installer to reset the sensitivity to its least sensitive setting.<br>• Protective Trigger Switch not set or adjusted correctly. |

# MAINTENANCE

## TRANSMITTER

The transmitter contains delicate electronic circuits and must be protected from impact and water damage. Do not remove soft plastic body until batteries need replacing.

### Low Transmitter Battery State

If three long tones are heard when the transmitter operates, the transmitter batteries need replacing.

**REPLACE THE BATTERIES (two CR2016)** as soon as possible. Failure to do so will mean that you are unable to disarm the system, and your motorcycle will be immobilised (see pin override).

### Replacing Transmitter Batteries

Clean the battery contacts and make sure that the replacement batteries are of the correct type and located in the correct position with the polarity maintained.

### New Transmitters

If one of your transmitters has been lost or damaged, a new transmitter can be supplied. The new transmitter will automatically cancel the lost or damaged transmitter, so only two functioning transmitters can ever exist. Contact your supplier for full details of this service.

## CONTROL UNIT

The control unit also contains delicate electronic circuits and must never be pressure washed or steam cleaned.

**FCC:**
**This device complies with Part 15 of the FCC rules. Operation is subject to the following two conditions: (1) This device may not cause harmful interference, and (2) this device must accept any interference received, including interference that may cause undesired operation.**
**Any changes or modifications not expressly approved by the party responsible for compliance could void the user's authority to operate the equipment.**

## MOTORCYCLE BATTERY

If the battery level falls, the alarm system is equipped with ‘intelligent sleep mode’.

Intelligent battery chargers and optimisers are available to maintain the motorcycle battery in top condition, recommended types are Optimate (DATATOOL Part No 02012011) and Airflow (DATATOOL Part No 02012009). DATATOOL does not recommend that any other charging device is used unless the system has been put in SERVICE MODE and the IN-LINE Fuse has been removed prior to connection of the charging device.

Contact your DATATOOL Installer for further information.

## GENERAL SECURITY

The DATATOOL alarm/immobiliser system will provide an effective deterrent against theft. It will not in itself guarantee that your motorcycle is not stolen or damaged. We strongly advise that your DATATOOL System is used in conjunction with basic anti-theft precautions.

## ACCESSORIES

A range of accessories are available to extend the performance of your system. These are available from your dealer or importer and include:

- Additional Remote Transmitters
- Pocket Paging Alert (Available only in certain countries)
- Intelligent Battery Charger

## WARRANTY TERMS AND CONDITIONS

Full written details of the Warranty Terms and Conditions will be given to you by the DATATOOL Authorised Installer.

**BE SURE TO RETURN YOUR CERTIFICATE OF INSTALLATION**

DATATOOL Products are designed and produced in the UK by **Datatool (UK) Ltd**
Anstey Mill Lane, Alton, Hampshire GU34 2QQ United Kingdom
Telephone: +44 (0) 1420 541444  Fax: +44 (0) 1420 541447
Email: info@datatool.co.uk  web: www.datatool.co.uk