Circuit Diagram

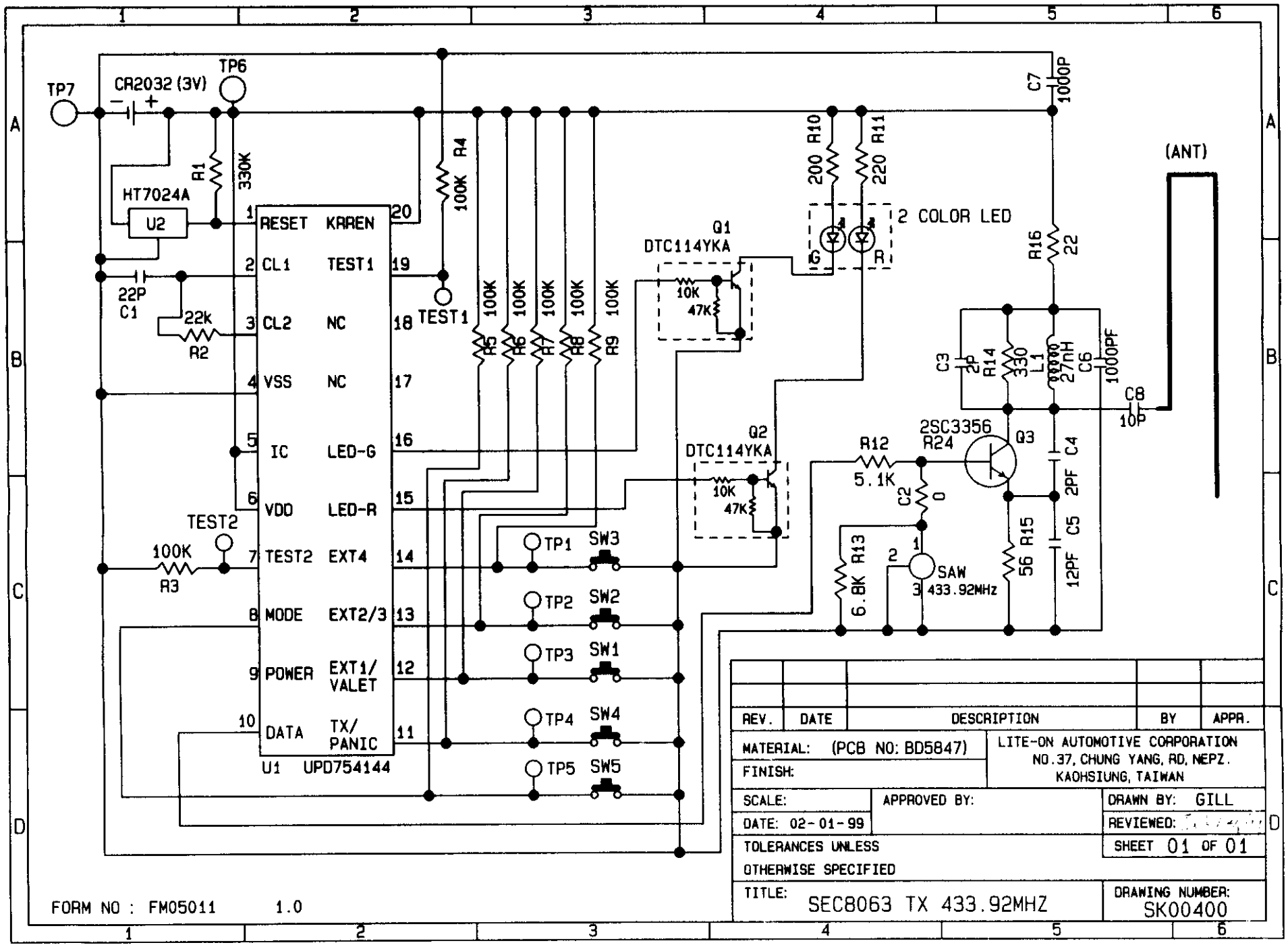
TP7
CR2032 (3V)
TP6
HT7024A
U2
R1
330K
22P
C1
22k
R2
RESET
CL1
CL2
VSS
IC
VDD
TEST2
MODE
POWER
DATA
KAREN
TEST1
NC
NC
LED-G
LED-R
EXT4
EXT2/3
EXT1/
VALET
TX/
PANIC
U1 UPD754144
TEST2
100K
R3
R4
100K
TEST1
R5
R6
R7
R8
R9
100K
TP1
TP2
TP3
TP4
TP5
SW3
SW2
SW1
SW4
SW5
Q1
DTC114YKA
10K
47K
Q2
DTC114YKA
10K
47K
200 R10
220 R11
2 COLOR LED
G
R
C7
1000P
R16
22
(ANT)
C3
2P
R14
330
L1
27nH
C6
1000PF
C8
10P
2SC3356
R24
Q3
R12
5.1K
C2
0
C4
2PF
C5
12PF
R15
56
R13
6.8K
SAW
433.92MHz
FORM NO : FM05011 1.0
REV.
DATE
DESCRIPTION
BY
APPR.
MATERIAL: (PCB NO: BD5847)
FINISH:
LITE-ON AUTOMOTIVE CORPORATION
NO.37, CHUNG YANG, RD, NEPZ.
KAOHSIUNG, TAIWAN
SCALE:
APPROVED BY:
DRAWN BY: GILL
DATE: 02-01-99
REVIEWED:
TOLERANCES UNLESS
OTHERWISE SPECIFIED
SHEET 01 OF 01
TITLE:
SEC8063 TX 433.92MHZ
DRAWING NUMBER:
SK00400