BreezeMAX™ TDD Modular Base Station

System Manual

PRELIMINARY

SW Version 4.0
October 2006
P/N
Rev.A

Document History

Topic	Description	Version/Date Issued
First Release	New Product Manual	SW Version 4.0, September 2006

Legal Rights

© Copyright 2006 Alvarion Ltd. All rights reserved.

The material contained herein is proprietary, privileged, and confidential and owned by Alvarion or its third party licensors. No disclosure thereof shall be made to third parties without the express written permission of Alvarion Ltd.

Alvarion Ltd. reserves the right to alter the equipment specifications and descriptions in this publication without prior notice. No part of this publication shall be deemed to be part of any contract or warranty unless specifically incorporated by reference into such contract or warranty.

Trade Names

Alvarion®, BreezeCOM®, WALKair®, WALKnet®, BreezeNET®, BreezeACCESS®, BreezeMANAGE™, BreezeLINK®, BreezeCONFIG™, BreezeMAX™, AlvariSTAR™, BreezeLITE™, MGW™, eMGW™, WAVEXpress™, MicroXpress™, WAVEXchange™, WAVEView™, GSM Network in a Box and TurboWAVE™ and/or other products and/or services referenced here in are either registered trademarks, trademarks or service marks of Alvarion Ltd.

All other names are or may be the trademarks of their respective owners.

Statement of Conditions

The information contained in this manual is subject to change without notice. Alvarion Ltd. shall not be liable for errors contained herein or for incidental or consequential damages in connection with the furnishing, performance, or use of this manual or equipment supplied with it.

Warranties and Disclaimers

All Alvarion Ltd. ("Alvarion") products purchased from Alvarion or through any of Alvarion's authorized resellers are subject to the following warranty and product liability terms and conditions.

Exclusive Warranty

(a) Alvarion warrants that the Product hardware it supplies and the tangible media on which any software is installed, under normal use and conditions, will be free from significant defects in materials and workmanship for a period of fourteen (14) months from the date of shipment of a given Product to Purchaser (the "Warranty Period"). Alvarion will, at its sole option and as Purchaser's sole remedy, repair or replace any defective Product in accordance with Alvarion' standard R&R procedure.

(b) With respect to the Firmware, Alvarion warrants the correct functionality according to the attached documentation, for a period of fourteen (14) month from invoice date (the "Warranty Period")". During the Warranty Period, Alvarion may release to its Customers firmware updates, which include additional performance improvements and/or bug fixes, upon availability (the "Warranty"). Bug fixes, temporary patches and/or workarounds may be supplied as Firmware updates.

Additional hardware, if required, to install or use Firmware updates must be purchased by the Customer. Alvarion will be obligated to support solely the two (2) most recent Software major releases.

ALVARION SHALL NOT BE LIABLE UNDER THIS WARRANTY IF ITS TESTING AND EXAMINATION DISCLOSE THAT THE ALLEGED DEFECT IN THE PRODUCT DOES NOT EXIST OR WAS CAUSED BY PURCHASER'S OR ANY THIRD PERSON'S MISUSE, NEGLIGENCE, IMPROPER INSTALLATION OR IMPROPER TESTING, UNAUTHORIZED ATTEMPTS TO REPAIR, OR ANY OTHER CAUSE BEYOND THE RANGE OF THE INTENDED USE, OR BY ACCIDENT, FIRE, LIGHTNING OR OTHER HAZARD.

Disclaimer

(a) The Software is sold on an "AS IS" basis. Alvarion, its affiliates or its licensors MAKE NO WARRANTIES, WHATSOEVER, WHETHER EXPRESS OR IMPLIED, WITH RESPECT TO THE SOFTWARE AND THE ACCOMPANYING DOCUMENTATION. ALVARION SPECIFICALLY DISCLAIMS ALL IMPLIED WARRANTIES OF MERCHANTABILITY AND FITNESS FOR A PARTICULAR PURPOSE AND NON-INFRINGEMENT WITH RESPECT TO THE SOFTWARE. UNITS OF PRODUCT (INCLUDING ALL THE SOFTWARE) DELIVERED TO PURCHASER HEREUNDER ARE NOT FAULT-TOLERANT AND ARE NOT DESIGNED, MANUFACTURED OR INTENDED FOR USE OR RESALE IN APPLICATIONS WHERE THE FAILURE, MALFUNCTION OR INACCURACY OF PRODUCTS CARRIES A RISK OF DEATH OR BODILY INJURY OR SEVERE PHYSICAL OR ENVIRONMENTAL DAMAGE ("HIGH RISK ACTIVITIES"). HIGH RISK ACTIVITIES MAY INCLUDE, BUT ARE NOT LIMITED TO, USE AS PART OF ON-LINE CONTROL SYSTEMS IN HAZARDOUS ENVIRONMENTS REQUIRING FAIL-SAFE PERFORMANCE, SUCH AS IN THE OPERATION OF NUCLEAR FACILITIES, AIRCRAFT NAVIGATION OR COMMUNICATION SYSTEMS, AIR TRAFFIC CONTROL, LIFE SUPPORT MACHINES, WEAPONS SYSTEMS OR OTHER APPLICATIONS REPRESENTING A SIMILAR DEGREE OF POTENTIAL HAZARD. ALVARION SPECIFICALLY DISCLAIMS ANY EXPRESS OR IMPLIED WARRANTY OF FITNESS FOR HIGH RISK ACTIVITIES.

(b) PURCHASER'S SOLE REMEDY FOR BREACH OF THE EXPRESS WARRANTIES ABOVE SHALL BE REPLACEMENT OR REFUND OF THE PURCHASE PRICE AS SPECIFIED ABOVE, AT ALVARION'S OPTION. TO THE

FULLEST EXTENT ALLOWED BY LAW, THE WARRANTIES AND REMEDIES SET FORTH IN THIS AGREEMENT ARE EXCLUSIVE AND IN LIEU OF ALL OTHER WARRANTIES OR CONDITIONS, EXPRESS OR IMPLIED, EITHER IN FACT OR BY OPERATION OF LAW, STATUTORY OR OTHERWISE, INCLUDING BUT NOT LIMITED TO WARRANTIES, TERMS OR CONDITIONS OF MERCHANTABILITY, FITNESS FOR A PARTICULAR PURPOSE, SATISFACTORY QUALITY, CORRESPONDENCE WITH DESCRIPTION, NON-INFRINGEMENT, AND ACCURACY OF INFORMATION GENERATED. ALL OF WHICH ARE EXPRESSLY DISCLAIMED. ALVARION' WARRANTIES HEREIN RUN ONLY TO PURCHASER, AND ARE NOT EXTENDED TO ANY THIRD PARTIES. ALVARION NEITHER ASSUMES NOR AUTHORIZES ANY OTHER PERSON TO ASSUME FOR IT ANY OTHER LIABILITY IN CONNECTION WITH THE SALE, INSTALLATION, MAINTENANCE OR USE OF ITS PRODUCTS.

Limitation of Liability

(a) ALVARION SHALL NOT BE LIABLE TO THE PURCHASER OR TO ANY THIRD PARTY, FOR ANY LOSS OF PROFITS, LOSS OF USE, INTERRUPTION OF BUSINESS OR FOR ANY INDIRECT, SPECIAL, INCIDENTAL, PUNITIVE OR CONSEQUENTIAL DAMAGES OF ANY KIND, WHETHER ARISING UNDER BREACH OF CONTRACT, TORT (INCLUDING NEGLIGENCE), STRICT LIABILITY OR OTHERWISE AND WHETHER BASED ON THIS AGREEMENT OR OTHERWISE, EVEN IF ADVISED OF THE POSSIBILITY OF SUCH DAMAGES.

(b) TO THE EXTENT PERMITTED BY APPLICABLE LAW, IN NO EVENT SHALL THE LIABILITY FOR DAMAGES HEREUNDER OF ALVARION OR ITS EMPLOYEES OR AGENTS EXCEED THE PURCHASE PRICE PAID FOR THE PRODUCT BY PURCHASER, NOR SHALL THE AGGREGATE LIABILITY FOR DAMAGES TO ALL PARTIES REGARDING ANY PRODUCT EXCEED THE PURCHASE PRICE PAID FOR THAT PRODUCT BY THAT PARTY (EXCEPT IN THE CASE OF A BREACH OF A PARTY'S CONFIDENTIALITY OBLIGATIONS).

Radio Frequency Interference Statement

The **Subscriber Unit** equipment has been tested and found to comply with the limits for a class B digital device, pursuant to ETSI EN 301 489-1 rules and Part 15 of the FCC Rules. These limits are designed to provide reasonable protection against harmful interference when the equipment is operated in a residential environment notwithstanding use in commercial, business and industrial environments. This equipment generates, uses, and can radiate radio frequency energy and, if not installed and used in accordance with the instruction manual, may cause harmful interference to radio communications.

The **Base Station** equipment has been tested and found to comply with the limits for a class A digital device, pursuant to ETSI EN 301 489-1 rules and Part 15 of

the FCC Rules. These limits are designed to provide reasonable protection against harmful interference when the equipment is operated in commercial, business and industrial environments. This equipment generates, uses, and can radiate radio frequency energy and, if not installed and used in accordance with the instruction manual, may cause harmful interference to radio communications. Operation of this equipment in a residential area is likely to cause harmful interference in which case the user will be required to correct the interference at the user's own expense.

FCC Radiation Hazard Warning

Base Station - To comply with FCC RF exposure requirements in Section 1.1307 and 2.1091 of FCC Rules, the antenna used for this transmitter must be fixed-mounted on outdoor permanent structures with a separation distance of at least 2 meter from all persons and must not be co-located or operating in conjunction with any other antenna or transmitter.

Indoor CPE - To comply with FCC RF exposure requirements in Section 1.1307and 2.1091 of FCC Rules, the antenna used for this transmitter must be kept at a separation distance of at least 20 cm from all persons and must not be co-located or operating in conjunction with any other antenna or transmitter.

Outdoor CPE - To comply with FCC RF exposure requirements in Section 1.1307 and 2.1091 of FCC Rules, the antenna be used for this transmitter must be fixed-mounted on outdoor permanent structures with a separation distance of at least 120 cm from all persons and must not be co-located or operating in conjunction with any other antenna or transmitter.

R&TTE Compliance Statement

This equipment complies with the appropriate essential requirements of Article 3 of the R&TTE Directive 1999/5/EC.

Safety Considerations - General

For the following safety considerations, "Instrument" means the BreezeMAX units' components and their cables.

Grounding

Base Station chassis, Power Feeders and outdoor units are required to be bonded to protective grounding using the bonding stud or screw provided with each unit.

Safety Considerations - DC Powered Equipment (BST & Power Feeder)

CAUTION	ATTENTION
Risk of electric shock and energy hazard.Disconnecting one Power Interface Unit (PIU) disconnects only one PIU module. To isolate the Base Station completely, disconnect both PIUs	Risque de décharge électrique et d'electrocution. La déconnection d'un seul module d'alimentation (PIU) n'isole pas complètement la Station de Base. Pour cela, il faut impérativement débrancher les deux modules d'alimentation (PIU).

Restricted Access Area: The DC powered equipment should only be installed in a Restricted Access Area.

Installation Codes: The equipment must be installed according to the latest edition of the country national electrical codes. For North America, equipment must be installed in accordance with the US National Electrical Code and the Canadian Electrical Code.

Overcurrent Protection: A readily accessible Listed branch circuit overcurrent protective device, rated 40A for the modular Base Station or 20A for the Power Feeder, must be incorporated in the building wiring.

CAUTION: This equipment is designed to permit connection between the earthed conductor of the DC supply circuit and the grounding conductor at the equipment. See installation instructions.

- The equipment must be connected directly to the DC Supply System grounding electrode conductor.
- All equipment in the immediate vicinity must be grounded in the same way, and not be grounded elsewhere.
- The DC supply system is to be local, i.e. within the same premises as the equipment.
- There shall be no disconnect device between the grounded circuit conductor of the DC source (return) and the point of connection of the grounding electrode conductor.

Lithium Battery

The battery on the NPU card is not intended for replacement.

Caution

To avoid electrical shock, do not perform any servicing unless you are qualified to do so.

Line Voltage

Before connecting this instrument to the power line, make sure that the voltage of the power source matches the requirements of the instrument.

Radio

The instrument transmits radio energy during normal operation. To avoid possible harmful exposure to this energy, do not stand or work for extended periods of time in front of its antenna. The long-term characteristics or the possible physiological effects of radio frequency electromagnetic fields have not been yet fully investigated.

Outdoor Units and Antennas Installation and Grounding

Ensure that outdoor units, antennas and supporting structures are properly installed to eliminate any physical hazard to either people or property. Make sure that the installation of the outdoor unit, antenna and cables is performed in accordance with all relevant national and local building and safety codes. Even where grounding is not mandatory according to applicable regulation and national codes, it is highly recommended to ensure that the outdoor unit and the antenna mast (when using external antenna) are grounded and suitable lightning protection devices are used so as to provide protection against voltage surges and static charges. In any event, Alvarion is not liable for any injury, damage or regulation violations associated with or caused by installation, grounding or lightning protection.

Disposal of Electronic and Electrical Waste

Disposal of Electronic and Electrical Waste

Pursuant to the WEEE EU Directive electronic and electrical waste must not be disposed of with unsorted waste. Please contact your local recycling authority for disposal of this product.

Important Notice

This user manual is delivered subject to the following conditions and restrictions:

- This manual contains proprietary information belonging to Alvarion Ltd. Such information is supplied solely for the purpose of assisting properly authorized users of the respective Alvarion products.
- No part of its contents may be used for any other purpose, disclosed to any person or firm or reproduced by any means, electronic and mechanical, without the express prior written permission of Alvarion Ltd.
- The text and graphics are for the purpose of illustration and reference only. The specifications on which they are based are subject to change without notice.
- The software described in this document is furnished under a license. The software may be used or copied only in accordance with the terms of that license.
- Information in this document is subject to change without notice. Corporate and individual names and data used in examples herein are fictitious unless otherwise noted.
- Alvarion Ltd. reserves the right to alter the equipment specifications and descriptions in this publication without prior notice. No part of this publication shall be deemed to be part of any contract or warranty unless specifically incorporated by reference into such contract or warranty.
- The information contained herein is merely descriptive in nature, and does not constitute an offer for the sale of the product described herein.
- Any changes or modifications of equipment, including opening of the equipment not expressly approved by Alvarion Ltd. will void equipment warranty and any repair thereafter shall be charged for. It could also void the user's authority to operate the equipment.

Some of the equipment provided by Alvarion and specified in this manual, is manufactured and warranted by third parties. All such equipment must be installed and handled in full compliance with the instructions provided by such manufacturers as attached to this manual or provided thereafter by Alvarion or the manufacturers. Non-compliance with such instructions may result in serious

damage and/or bodily harm and/or void the user's authority to operate the equipment and/or revoke the warranty provided by such manufacturer.

About This Manual

This manual describes the BreezeMAX TDD ("BreezeMAX") Base Station equipment Release 1 using SW version 4.0, and details how to install, operate and manage the system components.

This manual is intended for technicians responsible for installing, setting and operating the BreezeMAX Base Station equipment, and for system administrators responsible for managing the system.

This manual contains the following chapters and appendices:

- **Chapter 1 - System description:** Describes the BreezeMAX system and its components.
- **Chapter 2 - Installation:** Describes how to install the Base Station system components.
- **Chapter 3 - Commissioning:** Describes how to configure basic parameters and validate units' operation.
- **Chapter 4 - Operation and Administration:** Describes how to use the Monitor application for configuring parameters, checking system status and monitoring performance.
- **Appendix A - Software Upgrade:** Describes how to load new software files using TFTP, and how to switch to a new software version in BreezeMAX units.
- **Appendix B - Defining Service Profiles for Generic VoIP Gateways:** Describes the principles of defining Service Profiles for 3rd party generic (non DRAP based) VoIP devices.
- **Glossary:** A listing of commonly used terms.
- **Index**

Contents

Chapter 1 - System Description

1.1 Introducing BreezeMAX 2

1.2 Base Station Equipment 5

1.2.1 Base Station Chassis 5

1.2.2 Network Processing Unit (NPU) 5

1.2.3 Access Unit (AU-IDU) 6

1.2.4 AU-ODU-HP 7

1.2.5 Base Station Radio Configurations 7

1.2.6 Power Feeder 9

1.2.7 Power Interface Unit (PIU) 10

1.2.8 Power Supply Unit (PSU) 10

1.2.9 Air Ventilation Unit (AVU) 11

1.2.10 GPS 11

1.3 Networking Equipment 12

1.4 Management Systems 12

1.4.1 AlvariSTAR™ 13

1.4.2 BreezeLITE™ 14

1.4.3 BreezeMAX Service Manager 14

1.5 Specifications 15

1.5.1 Radio 15

1.5.2 Base Station 2.X GHz Antennas (Optional) 16

1.5.3 Base Station 3.5 GHz Antennas (Optional) 17

1.5.4 AU-IDU to AU-ODU Communication 17

1.5.5 Data Communication (Ethernet Ports) 18
1.5.6 Configuration and Management 18
1.5.7 Standards Compliance, General 19
1.5.8 Environmental 19
1.5.9 Services 20
1.5.10 Physical and Electrical 21

Chapter 2 - Installation Guidelines

2.1 Installing the AU-ODU 28
2.1.1 AU-ODU Installation Requirements 28
2.1.2 Guidelines for Positioning the AU-ODU 29
2.1.3 IF Cables 30
2.1.4 Pole Mounting the ODU 30
2.1.5 AU-ODU 34
2.1.6 Connecting the Cables 35
2.2 Installing the Base Station Equipment 37
2.2.1 BST Installation Requirements 37
2.2.2 BMAXWMAX-BST-SH Chassis Slot Assignments 38
2.2.3 Power Requirements 39
2.2.4 HOT SWAP Support 39
2.2.5 Power Interface Unit (PIU) 39
2.2.6 Power Supply Unit (PSU) 42
2.2.7 Access Unit Indoor Module (AU-IDU) 44
2.2.8 Network Processing Unit (NPU) 46
2.2.9 Using the Hot Swap Injector/Ejector Handles 48
2.2.10 Installing the Base Station Chassis and Modules 50

2.2.11 Air Ventilation Unit (AVU) 52

2.3 Installing the ODU Power Feeder 54

2.3.1 Installation Requirements 54

2.3.2 The ODU Power Feeder 55

2.3.3 Installing the ODU Power Feeder 56

2.4 Installing the GPS Adapter 58

2.4.1 Installation Requirements 58

2.4.2 The GPS Adapter 59

2.4.3 Installing the GPS Adapter 60

Chapter 3 - Commissioning

3.1 Configuring Basic Parameters of Base Station 64

3.1.1 NPU Parameters Required for Management 64

3.1.2 Base Station Configuration Parameters 66

3.1.3 RADIUS Parameters 66

3.1.4 Chain parameters 67

3.1.5 Radio Cluster 67

3.1.6 ODU 67

3.1.7 AU 67

3.1.8 SU 69

3.2 Operation Verification 70

3.2.1 AU-ODU LEDs 70

3.2.2 Base Station LEDs 70

3.2.3 ODU Power Feeder LEDs 74

3.2.4 GPS Adapter LEDs 74

3.2.5 Verifying the Ethernet Connection 75

Chapter 4 - Operation and Administration

4.1 BreezeMAX System Management 78

4.2 The Monitor Program 80

4.2.1 Accessing the Monitor Program 80

4.2.2 Using the Monitor Program 81

4.3 The NPU's Main Menu 84

4.3.1 Base Station Menu 84

4.3.2 NPU Menu 84

4.3.3 Radio Cluster Menu 84

4.3.4 ODU Menu 84

4.3.5 AU Menu 85

4.3.6 SU Menu 85

4.3.7 Services Menu 85

4.3.8 Exit 85

4.4 Base Station Menu 86

4.4.1 Show 86

4.4.2 Configuration 87

4.4.3 Alarms and Traps 91

4.4.4 RADIUS 94

4.4.5 Licenses 102

4.4.6 Chain 104

4.4.7 GPS Info 105

4.5 NPU Menu 107

4.5.1 Show 107

4.5.2 Unit Control 109

4.5.3 Configuration 114

4.5.4 Performance Monitoring 121

4.6 Radio Cluster Menu 124

4.6.1 Show Summary 124

4.6.2 Select 125

4.6.3 Add 125

4.6.4 Radio Cluster Parameters 125

4.7 ODU Menu 127

4.7.1 Show Summary 127

4.7.2 Select 128

4.7.3 Add 129

4.7.4 ODU Parameters 129

4.7.5 Frequency Bands File and Frequency Bands Groups 130

4.8 AU Menu 132

4.8.1 Show Summary 132

4.8.2 Upgrading AU's SW 133

4.8.3 SW Files in NPU 134

4.8.4 Select 135

4.8.5 AU Slot # Menu 136

4.8.6 Performance Monitoring 148

4.9 SU Menu 150

4.9.1 Show Summary 150

4.9.2 Show Summary by AU 152

4.9.3 Upgrading SU's SW 152

4.9.4 SW Files in NPU 152

4.9.5 Select by Name 154

4.9.6 Select by MAC Address 154

4.9.7 SU # Menu 154
4.9.8 Add New SU 172
4.9.9 Clear All Configured SU SW Files 172
4.10Services Menu 173
4.10.1 Introduction to Services 173
4.10.2 Introduction to Filtering Features 181
4.10.3 Common Operations in Services Menu 182
4.10.4 The Services Menu 183
4.10.5 Defining Local Service Profiles 208
4.10.6 Defining Local Services 209
4.10.7 Defining RADIUS Based Services 209
4.10.8 Pre-configured Profiles 210
4.11NPU Parameters Summary 216
A.1 Before you Start 232
A.2 File Loading Procedure 233
A.3 Completing the Software Upgrade (Switching Versions) 235
B.1 Introduction 238
B.1.1 Priority Marking 238
B.1.2 General Assumptions 238
B.2 1 POTS Basic VoIP G.729 Service Profile 240
B.2.1 Service Characteristics 240
B.2.2 RTP BW Calculation 240
B.2.3 RTCP BW Calculation 240
B.2.4 QoS Profile 240
B.3 1 POTS Advanced VoIP G.729 Service Profile 242
B.3.1 Service Characteristics 242

B.3.2 Voice RTP BW Calculation 242
B.3.3 Voice RTCP BW Calculation 242
B.3.4 T.38 14,400 Kbps Fax RTP BW Calculation 242
B.3.5 FAX RTCP BW Calculation 243
B.3.6 QoS Profiles 243
B.4 1 POTS Basic VoIP G.711 Service Profile 244
B.4.1 Service Characteristics 244
B.4.2 RTP BW Calculation 244
B.4.3 RTCP BW Calculation 244
B.4.4 QoS Profile 244
B.5 1 POTS Advanced VoIP G.711 Service Profile 246
B.5.1 Service Characteristics 246
B.5.2 Voice RTP BW Calculation 246
B.5.3 Voice RTCP BW Calculation 246
B.5.4 T.38 14,400 Kbps Fax RTP BW Calculation 246
B.5.5 FAX RTCP BW Calculation 247
B.5.6 QoS Profiles 247

Figures

Figure 1-1: BreezeMAX System Architecture.....4
Figure 2-1: AU-ODU-HP Pole Installation Using Special Clamps.....32
Figure 2-2: AU-ODU-HP Pole Installation Using Metal Band.....33
Figure 2-3: Bottom Panel of the AU-ODU.....34
Figure 2-4: BMAXWMAX-BST-SH Chassis Slot Assignments.....38
Figure 2-5: PIU Module Front Panel.....40
Figure 2-6: PSU Module Front Panel.....43
Figure 2-7: AU-IDU Module Front Panel.....44
Figure 2-8: NPU Module Front Panel.....46
Figure 2-9: AVU Drawer Front Panel.....52
Figure 2-10: ODU Power Feeder Front Panel.....55
Figure 2-11: ODU Power Feeder Rear Panel.....55
Figure 2-12: GPS Adapter Front Panel.....59
Figure 2-13: GPS Adapter Rear Panel.....59
Figure 4-1: Base Station Chassis Slot Assignment.....87
Figure 4-2: Filtering Functionality.....182

Tables

Table 1-1: Number of AU-IDUs, AU-ODUs and Power Feeders Required for Various Configurations 10

Table 1-2: PSU Requirements, Configurations with one NPU (excluding PSU redundancy) 11

Table 1-3: Radio Specifications 15

Table 1-4: Base Station 2.X GHz Antennas, Electrical Specifications 16

Table 1-5: Base Station 3.5 GHz Antennas, Electrical Specifications 17

Table 1-6: AU-IDU to AU-ODU Communication 17

Table 1-7: Data Communication (Ethernet Ports) 18

Table 1-8: Configuration and Management 18

Table 1-9: Standards Compliance, General 19

Table 1-10: Environmental Specifications 19

Table 1-11: Services 20

Table 1-12: Mechanical Specifications, Base Station Equipment 21

Table 1-13: Electrical Specifications, Base Station Equipment 21

Table 1-14: Connectors, Base Station Equipment 23

Table 1-15: Base Station 2.X GHz Antennas, Mechanical Specifications 24

Table 1-16: Base Station 3.5 GHz Antennas, Mechanical Specifications 25

Table 2-1: AU-ODU Types 28

Table 2-2: IF Cables Requirements 30

Table 2-3: Maximum IF Cable Length (Double Shielded Cables) 30

Table 2-4: AU-ODU LEDs 34

Table 2-5: AU-ODU Connectors 34

Table 2-6: Power Requirements, Base Station Equipment 39

Table 2-7: PIU LEDs 41
Table 2-8: PSU Requirements, Configurations with one NPU (excluding PSU redundancy) 42
Table 2-9: PSU LEDs 43
Table 2-10: AU-IDU LEDs 45
Table 2-11: NPU Connectors 47
Table 2-12: NPU LEDs 47
Table 2-13: AVU LEDs 52
Table 2-14: ODU Power Feeder Connectors 55
Table 2-15: ODU Power Feeder LEDs 56
Table 2-16: GPS Adapter Connectors 59
Table 2-17: GPS Adapter LEDs 60
Table 3-1: Basic NPU Parameters 64
Table 3-2: AU-ODU-LEDs 70
Table 3-3: AU-IDU LEDs 71
Table 3-4: NPU LEDs 72
Table 3-5: PIU LEDs 73
Table 3-6: PSU LEDs 73
Table 3-7: AVU LEDs 73
Table 3-8: ODU Power Feeder LEDs 74
Table 3-9: GPS Adapter LEDs 74
Table 4-1: COM Port Configuration 80
Table 4-2: Default Passwords 110
Table 4-3: Frequency Bands 131
Table 4-4: Automatic Association of Channel 1 Upon First Power-Up 144
Table 4-5: Rates (Modulation Schemes and Coding) 147
Table 4-6: Intermediate Step Mask 168

Table 4-7: Hybrid VLAN Mode 180
Table 4-8: Hybrid VLAN Mode 187
Table 4-9: Priority Marking Values 195
Table 4-10: CT Values 202
Table 4-11: Pre-Configured Data Service Profiles 211
Table 4-12: Pre-Configured Forwarding Rules for Data Service 212
Table 4-13: Pre-Configured Priority Classifiers for Data Services 212
Table 4-14: Pre-Configured QoS Profiles for Data Services 212
Table 4-15: Pre-Configured Voice Service Profiles (for DRAP-based Gateways) 213
Table 4-16: Pre-Configured Service Profiles for Generic (non-DRAP) VoIP Services 213
Table 4-17: Pre-Configured Forwarding Rule for Voice Services 214
Table 4-18: Pre-Configured Priority Classifiers for Generic (non-DRAP) VoIP Service 214
Table 4-19: Pre-Configured BE and RT QoS Profile for Voice Services 214
Table 4-20: Pre-Configured CG QoS Profile for Generic (non-DRAP) VoIP Services 215
Table 4-21: Pre-Configured Forwarding Rule for Transparent Services 215
Table 4-22: Pre-Configured QoS Profile for Transparent Services 215
Table 4-23: NPU Monitor Parameters Summary 216

1

Chapter 1 - System Description

In This Chapter:

- "Introducing BreezeMAX" on page 2
- "Base Station Equipment" on page 5
- "Networking Equipment" on page 12
- "Management Systems" on page 12
- "Specifications" on page 15

1.1 Introducing BreezeMAX

BreezeMAX TDD (BreezeMAX) is Alvarion's WiMAX-ready platform operating in Time Division Duplex (TDD) mode. It leverages Alvarion's market-leading knowledge of Broadband Wireless Access (BWA), industry leadership, proven field experience, and core technologies including many years of experience with OFDM technology.

Built from the ground up based on the IEEE 802.16/ETSI HIPERMAN standards, BreezeMAX is designed specifically to meet the unique requirements of the wireless Metropolitan Area Network (MAN) environment and to deliver broadband access services to a wide range of customers, including residential, SOHO, SME and multi-tenant customers. Its Media Access Control (MAC) protocol was designed for point-to-multipoint broadband wireless access applications, providing a very efficient use of the wireless spectrum and supporting difficult user environments. The access and bandwidth allocation mechanisms accommodate hundreds of subscriber units per channel, with subscriber units that may support different services to multiple end users.

The system uses OFDM radio technology, which is robust in adverse channel conditions and enables operation in non line of sight links. This allows easy installation and improves coverage, while maintaining a high level of spectral efficiency. Modulation and coding can be adapted per burst, ever striving to achieve a balance between robustness and efficiency in accordance with prevailing link conditions.

BreezeMAX supports a wide range of network services, including Internet access (via IP or PPPoE tunneling), VPNs and Voice over IP. Service recognition and multiple classifiers that can be used for generating various service profiles enable operators to offer differentiated SLAs with committed QoS for each service profile.

BreezeMAX offers an innovative solution for a Self-Install CPE, including all the features, embedded capabilities and supplementary tools that support easy installation by a non-professional user and fully automated network-entry, authentication and services provisioning.

The elements that enable and support the Self-Install solution include:

- 4-channels Access Unit and high-power radios at the Base Station
- 2nd or 4th order transmit diversity at the Base Station.

- 4th order receive diversity at the Base Station using Maximum Receive Ratio Combining (MRRC).
- Uplink sub-channels using OFDMA-16 for increased service efficiency and improved link budget.
- A high-power CPE with an integral antenna array, providing 360 degrees coverage with smart selection of Tx and Rx antennas. An optional wall/window mounted antenna to extend the coverage area.
- Automatic frequency scanning and best Access Unit/Base Station selection algorithms in the CPE.
- Enhanced Automatic Transmit Power Control (ATPC) and dynamic rate selection (multirate) optimized for multiple sub-channels in the uplink.
- Centralized CPE authentication and service provisioning using either a commercial RADIUS server or an entry level BreezeMAX Service Manager server available from Alvarion.
- Centralized Service Profiles distribution to ensure location-free service availability and fully controlled service provisioning.
- A suite of features and support tools to enable fast and simple installation according to various business models.

The system operates in Time Division Duplex (TDD) and is currently available in the 2.3 GHz (WCS), 2.5 GHz (MMDS and MCS) and 3.5 GHz frequency bands. The actual operating frequencies used by the system can be configured according to applicable radio regulations, license conditions and specific deployment considerations.

A BreezeMAX system comprises the following:

- Customer Premise Equipment (CPE): BreezeMAX Subscriber Units and Alvarion's Voice/Networking Gateways.
- Base Station (BST) Equipment: BreezeMAX Base Station equipment, including the modular Base Station, Outdoor Radio Units, GPS Receiver and other components.

- Networking Equipment: Standard switches/routers and other networking equipment, supporting connections to the backbone and/or Internet.
- Management Systems: SNMP-based Management, RADIUS server(s) and other Operation Support Systems.

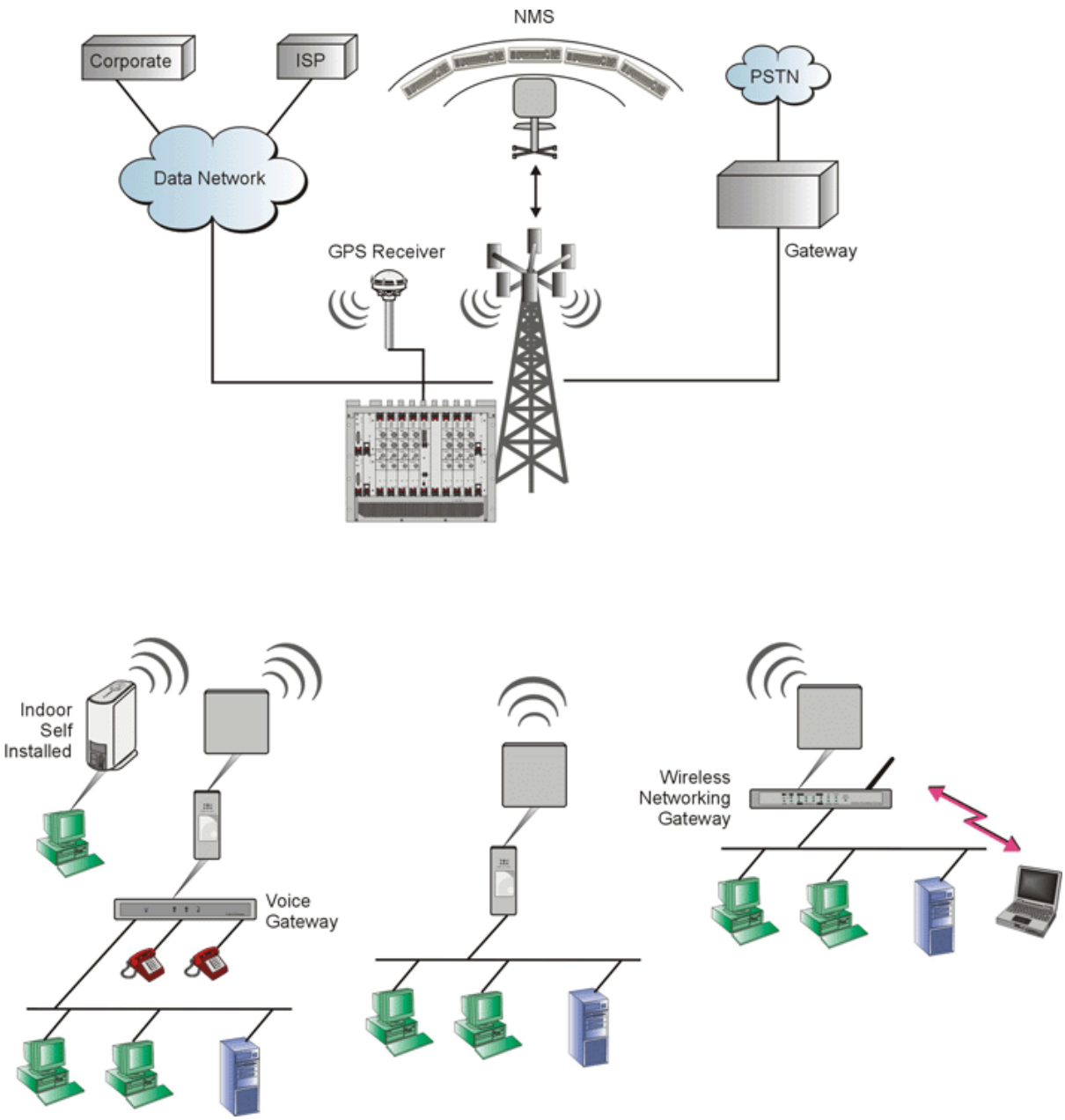

Figure 1-1: BreezeMAX System Architecture

1.2 Base Station Equipment

The Multi Carrier, High Power, Full Duplex Base Station provides all the functionality necessary to communicate with SUs and to connect to the backbone of the Service Provider.

The Base Station comprises the following elements:

1.2.1 Base Station Chassis

The Base Station equipment is based on an 8U high cPCI (compact Peripheral Component Interconnect) shelf designed for installation in a 19" or 21" (ETSI) rack. This chassis has a total of nine double Euro (6U high) slots and six single Euro (3U high) slots. All the modules are hot swappable, and high availability can be provided through multiple redundancy schemes.

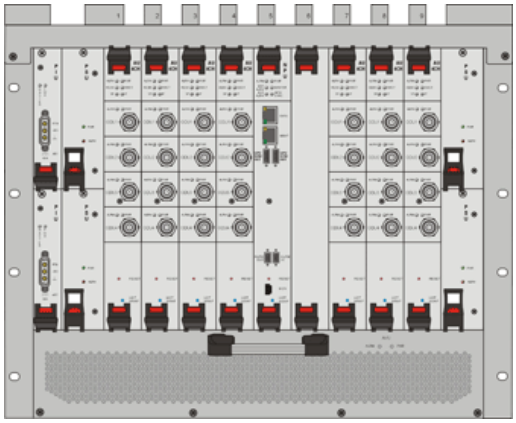

The six single Euro slots re intended for one or two redundant Power Interface Units (PIU) and up to four redundant Power Supply Units (PSUs).

One of the double Euro slots is dedicated to the Network Processing Unit (NPU) module, supporting a central networking and management architecture. Another double Euro slot is reserved for an optional redundant NPU (NPU redundancy support is planned for a future release).

The remaining seven double Euro slots are dedicated mainly for Access Unit (AU) indoor modules, thus enabling various future redundancy configurations.

Additionally, the Base Station chassis contains an air convection and ventilation fan tray (AVU).

1.2.2 Network Processing Unit (NPU)

The Network Processing Unit is the "heart" of the BreezeMAX Base Station. The NPU module serves as the central processing unit that manages the base station's components and the SUs served by it. It also aggregates the traffic from the AU modules and transfers it to the IP Backbone through a dedicated Gigabit/Fast Ethernet interface.

The NPU main functions are:

- Aggregate backbone Ethernet connectivity via a 100/1000 Base-T network interface.
- Traffic classification and connection establishment initiation.
- Policy based data switching.
- Service Level Agreements management.
- RADIUS NAS, enabling centralized SUs' authentication and services authorization by RADIUS server(s).
- Centralized agent in the Base Station to manage all cell site's AUs and all registered SUs.

- Base Station overall operation control, including AU diagnostic and control, PSU monitoring, AVU management and redundancy support.
- Alarms management, including external alarm inputs and activation of external devices (future option).
- Synchronization, including GPS antenna interface, clock and IF reference generation and distribution to the Base Station modules as well as to other collocated Base Station chassis (future option).

An SNMP agent incorporated into the NPU enables extensive In Band (IB) management of the Base Station and all its registered SUs. Out Of Band (OOB) management is supported through a dedicated 10/100 Base-T interface. A serial RS-232 port supports local configuration, monitoring and debugging.

Two NPU modules can be used to provide a 1+1 redundancy scheme. The redundancy mechanism, to be supported in future releases, will be based on a Master <-> Slave principle, where the slave is in passive mode and is constantly updating all the learning tables and networking parameters of the master card.

1.2.3 Access Unit (AU-IDU)

The double Euro AU-IDU module contains the WiMAX-ready MAC and modem and is responsible for the wireless network connection establishment and for bandwidth management. Each AU-IDU connects to the NPU via the back plane. In addition, each AU-IDU connects to all other AU slots via the back plane over a shared bus.

Each AU-IDU includes four channels using a common PHY and MAC that can connect to up to four outdoor radio units, according to the selected diversity mode (refer to Section 1.2.5 below for more details). The AU-IDU module connects to the AU-ODUs via Intermediate Frequency (IF) cables carrying full duplex data, control and management signals between the AU-IDU and the AU-ODU, as well as power (-48 VDC) and 64 MHz synchronization reference clock from the AU-IDU to the AU-ODU. The IF Tx and Rx frequencies are 240 MHz and 140 MHz, respectively. IDU-ODU service channel at 14 MHz serves for bi-directional control, status and management signaling.

1.2.4 AU-ODU-HP

The AU-ODU-HP (High Power ODU) is a full duplex multi-carrier radio unit that connects to an external antenna. It is designed to provide high system gain and interference robustness utilizing high transmit power and low noise figure. It supports a bandwidth of up to 14 MHz, enabling future options such as increased capacity through either larger channels or using an IF multiplexer.

The AU-ODU-HP provides a maximum output power of 36 dBm.

1.2.5 Base Station Radio Configurations

The 4-Channels High-Power AU-IDUs support the following radio configurations:

1.2.5.1 Single Channel per AU, No Diversity

This is the basic configuration, where each AU-IDU connects to one ODU, serving a single sector with a directional antenna.

1.2.5.2 Multiple Channels per AU, No Diversity

Up to 4 channels per AU-IDU can be used to cover several sectors, where each channel connects to one ODU, with one ODU per sector. A single AU-IDU can cover a 360° cell. Where the coverage of the cell can be built from 3 sectors of 120° each with frequency reuse 1, or 4 sectors of 90° each with frequency reuse 1 (i.e. frequency per sector) or 1/2 (i.e. 2 frequencies for 4 sectors where each frequency is used for 2 opposite sectors). All ODUs served by the same AU-IDU share a common MAC and modem. Each ODU is managed separately.

The following figure describes the multi channel use to cover a cell of 360° with 4 sectors, using frequency reuse 1:

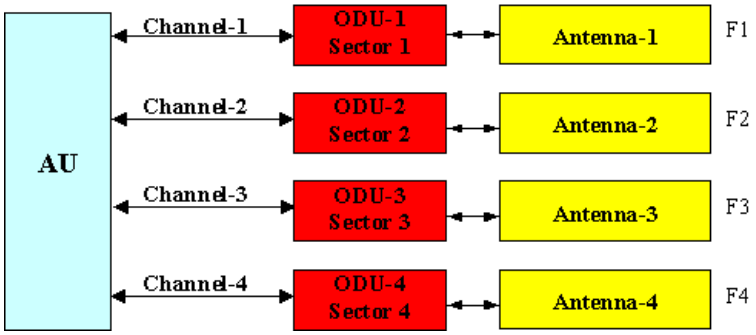

The following figure describes the multi channel use to cover a cell of 360° with 4 sectors, using frequency reuse 1/2:

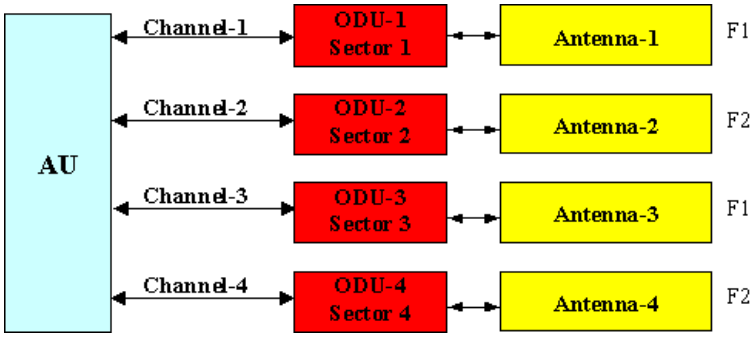

1.2.5.3 2nd Order Diversity

Multiple channel configuration with second order diversity allows coverage of one sector with space diversity by a single AU-IDU and two ODUs connected to channels 1 and 2. The same frequency and transmit power are set for both ODUs. The two ODUs served by the same AU-IDU share a common MAC and modem.

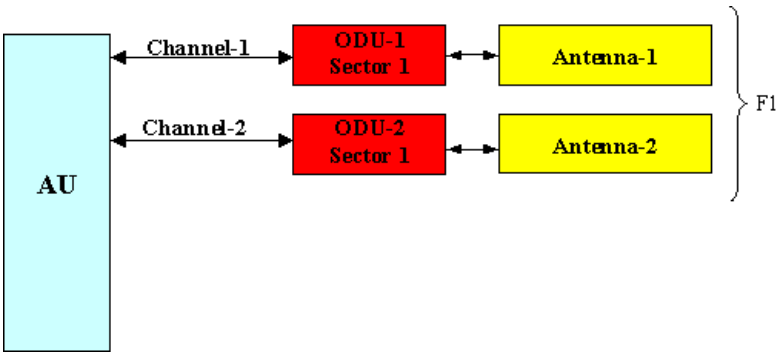

1.2.5.4 4th Order Diversity

Multiple channel configuration with fourth order diversity allows a single sector coverage by a single AU-IDU with 4 ODUs. In each sector, both space and polarization diversities are implemented, using dual polarization slant antennas. The channels are paired: channels 1 and 2 form one pair, channels 3 and 4 form the second pair. The two ODUs connected to each pair are connected to the same dual polarization antenna. The same frequency and transmit power are set for all four ODUs. All ODUs served by the same AU-IDU share a common MAC and modem.

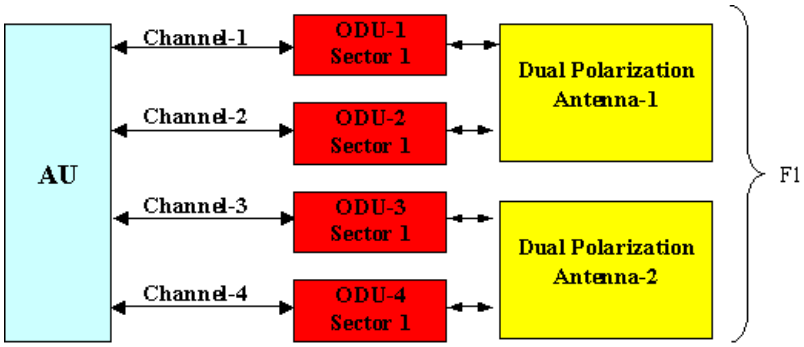

1.2.6 Power Feeder

The Base station's PIU can support a maximum current of 35 A (@-40.5 VDC). Using proper design considerations, up to six AU-ODU-HP units can be powered directly from the Base Station (via the back panel and AU-IDUs). The ODU Power Feeder is used as an additional power source providing power (-48 VDC) to AU-ODU-HP High Power ODUs. It transfers transparently all signals between the AU-IDU and the ODU, while injecting DC power received from an external source. Each ODU Power Feeder unit can serve up to four High Power ODUs. Up to three ODU Power Feeder units can be installed in a 1U high Power Feeder panel.

The following table displays the number of ODUs and Power Feeder modules required for various radio configurations:

Table 1-1: Number of AU-IDUs, AU-ODUs and Power Feeders Required for Various Configurations

Diversity Mode	Number of Sectors (AU-IDUs)	Number of ODUs	Number of Power Feeders
Second Order Diversity	3	6	-
	4	8	1
	6	12	2
Fourth Order Diversity	3	12	2
	4	16	3
	6	24	5

1.2.7 Power Interface Unit (PIU)

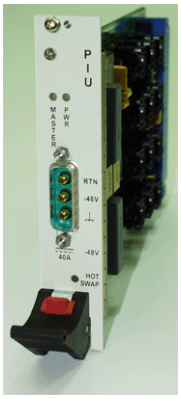

The single Euro PIU module is the interface between the Base Station site's DC power source and the Base Station chassis PSUs and external AU ODUs, which receive power via the AU-IDUs.

The PIU filters and stabilizes the Base Station input power and protects the system from power problems such as over voltage, surge pulses, reverse polarity connection and short circuits. It also filters high frequency interference (radiated emissions) and low frequency interference (conducted emissions) to the external power source. Each Base Station chassis contains two slots for an optional 1+1 PIU redundancy. One PIU is sufficient to support a fully populated chassis. Two PIU modules provide redundant power feeding (two input sources) while avoiding current flow between the two input sources.

1.2.8 Power Supply Unit (PSU)

The single Euro PSU module is a 48 VDC power supply unit. Each Base Station chassis can contain up to four PSU modules providing N+1 redundancy configurations.

Table 1-2 displays the number of PSU modules (excluding redundant units) required for various Base Station configurations without NPU redundancy (one NPU):

Table 1-2: PSU Requirements, Configurations with one NPU (excluding PSU redundancy)

Number of AU-IDUs	Minimum Required Number of PSUs
1 - 2	1
3 - 4	2
5 - 6	3

1.2.9 Air Ventilation Unit (AVU)

The 2U high AVU includes a 1U high integral chamber for inlet airflow and a 1U high fan tray with an internal alarm module. To support high availability Base Station, the fan tray includes 10 brush-less fans, where 9 fans are sufficient for cooling a fully loaded chassis. A failure in any of the fans is indicated by both the front panel LEDs and a trap that is sent to the management system. To further support high availability, the chassis may operate with the hot-swappable fan tray extracted from it for a period of time sufficient for replacing it (up 10 minutes).

1.2.10 GPS

GPS is used to synchronize the air link frames of Intra-site and Inter-site located sectors to ensure that in all sectors the air frame will start at the same time, and that all sectors will switch from transmit (downlink) to receive (uplink) at the same time. This synchronization is necessary to prevent Intra-site and Inter-site sectors interference and saturation (assuming that all sectors are operating with the same frame size and with the same DL/UL ratio).

The GPS clock required is 1PPS with accuracy of 10^{-11} and maximum jitter of 100ns. These GPS clock requirements can be reached by indoor or outdoor installed GPS unit when it is synchronized to at least 4 satellites.

1.2.10.1 Indoor GPS Receiver

The Indoor GPS Receiver comprises a GPS receiver integrated with a stable OCXO oscillator, within a unit designed for mounting in a standard 19 inch rack. A 50 meter coaxial cable connects it to an active antenna. The indoor installed GPS system is able to provide up to 40 hours of clock holdover with a maximal drift of 50 microseconds when the GPS system losses satellites synchronization. The Indoor GPS provides 1PPS at TTL levels and the control channel is driven by an RS-232 serial interface. The unit is powered directly from a -48 VDC power source.

1.2.10.2 Outdoor GPS Receiver

The all-outdoor GPS Receiver is a pole mountable GPS receiver and antenna in a single environmentally protected enclosure. The Outdoor GPS Receiver is powered by a 12 VDC power source, supplied to it by the NPU via the GPS Adapter. The RS-422 interface allows installation at distances up to 100m.

1.2.10.3 GPS Adapter Unit

The GPS Adapter connects the different GPS units to the NPU, adapting the different interfaces. Future versions may include an internal GPS module that will allow an all-in-one low-cost solution. A future optional addition of OCXO in the GPS Adapter box may provide an improved hold over solution when the GPS is not synchronized. The GPS Adapter is powered by 12 VDC supplied by the NPU. The GPS Adapter is installed in a 1U high panel (the same panel that is used for the ODU Power Feeders).

1.3 Networking Equipment

The Base Station is connected to the backbone through standard data communication and telecommunication equipment. The NPU aggregates the traffic from all AUs, connecting to the backbone through a 100/1000 Base-T port.

point-to-point link from the Base Station to the backbone can be either wired or wireless.

1.4 Management Systems

The end-to-end IP-based architecture of the system enables full management of all components, using standard management tools. An SNMP agent in the NPU/Micro Base Station implements standard and proprietary MIBs for remote setting of operational modes and parameters of the Base Station equipment as well as the Subscriber Units served by it. Security features incorporated in BreezeMAX units restrict the access for management purposes.

In addition, the Ethernet WAN can be used to connect to other Operation Support Systems including servers, Customer Care systems and AAA (Authentication, Authorization and Admission) tools.

1.4.1 AlvariSTAR™

AlvariSTAR is a comprehensive Carrier-Class network management system for Alvarion's Broadband Wireless Access products-based Networks. AlvariSTAR is designed for today's most advanced Service Providers' Network Operation Centers (NOCs), providing the network Operation, Administration and Maintenance (OA&M) staff and managers with all the network surveillance, monitoring and configuration capabilities that they require in order to effectively manage the BWA network while keeping the resources and expenses at a minimum.

AlvariSTAR is designed to offer the network's OA&M staff with a unified, scalable and distributable network management system. AlvariSTAR system uses a distributed client-server architecture, which provides the service provider with a robust, scalable and fully redundant network management system in which all single points of failure can be avoided.

AlvariSTAR provides the following BWA network management functionality:

- Device Discovery
- Device Inventory
- Topology
- Fault Management
- Configuration Management
- Service Management
- Data Collection
- Performance Monitoring
- Device embedded software upgrade
- Security Management
- Northbound interface to other Network Management Systems.

Embedded with the entire knowledge base of BWA network operations, AlvariSTAR is a unique state-of-the-art power multiplier in the hands of the service provider that enables the provisioning of satisfied customers. AlvariSTAR

dramatically extends the abilities of the service provider to provide a rich portfolio of services and to support rapid customer base expansion.

1.4.2 BreezeLITE™

Alvarion's BreezeLITE is an SNMP (Simple Network Management Protocol) application designed for on-line management of BreezeMAX system components. This utility simplifies the installation and maintenance of small size installations by easily enabling the change of settings or firmware upgrade for one Base Station/Micro Base Station at a time (including the managed device's components and associated SUs).

BreezeLITE allows accessing a wide array of monitoring and configuration options, including:

- Device Manager for Base Station and Micro Base Station, including NPU, AUs and SUs
- Unit status and current configuration verification
- Selected unit configuration modification
- Service Profiles verification and modification
- Service Provisioning
- Firmware upgrade for the NPU/Micro Base Station, AUs and SUs
- On-line performance data monitoring and statistics collection
- A special MS Excel Add-In for effective tabular and graphical display of collected data
- Support for http cut-through to Voice Gateways and Networking Gateways

1.4.3 BreezeMAX Service Manager

BreezeMAX Service Manager provides centralized management of user authentication and authorization using the industry standard RADIUS protocol. The BreezeMAX Service Manager receives from the NPU (operating as a NAS) the authentication details (User Name and Password) upon network entry of a new CPE, and respond (if authentication if verified by matching details in the database) by sending properties of the Services that should be granted to the user.

1.5 Specifications

1.5.1 Radio

Table 1-3: Radio Specifications

Item	Description	
Frequency	Unit/Band	Frequency (MHz)
	AU-ODU-HP-2.3	2300 - 2360
	AU-ODU-HP-2.3-WCS	2305 - 2315, 2350 - 2360
	AU-ODU-HP-2.5-A1	2496 - 2602
	AU-ODU-HP-2.5-A2	2590 - 2690
	AU-ODU-HP-TDD-3.4a	3399.5 - 3455
	AU-ODU-HP-TDD-3.4b	3455 - 3500
	AU-ODU-HP-TDD-3.5a	3500 - 3555
	AU-ODU-HP-TDD-3.4a	3545 - 3600
Operation Mode	TDD, Full duplex	
Channel Bandwidth	■ 3.5 MHz ■ 5 MHz	
Central Frequency Resolution	0.125 MHz (actual configurable frequencies depend on the local radio regulations and allocated spectrum)	
Antenna Port (AU-ODU)	N-Type, 50 ohm	
Max. Input Power (at AU-ODU antenna port)	-60 dBm before saturation, -8 dBm before damage	
Output Power (at AU-ODU antenna port)	36 dBm +/-1 dB maximum Power control range: 10 dB	
Modulation	OFDM modulation, 256 FFT points; BPSK, QPSK, QAM16, QAM64	
FEC	Convolutional Coding: 1/2, 2/3, 3/4	

Table 1-3: Radio Specifications

Item	Description			
Typical Sensitivity (BER=1E-6)	Modulation & Coding	Minimum SNR (dB)	Sensitivity (dBm) @ 3.5 MHz BW	Sensitivity (dBm) @ 5 MHz BW
	BPSK 1/2	2.5	-99.5	-98
	BPSK 3/4	4.8	-97.5	-96
	QPSK 1/2	5.9	-96.5	-95
	QPSK 3/4	8.6	-93.5	-92
	QAM16 1/2	11.4	-90.5	-89
	QAM16 3/4	14.8	-87.5	-86
	QAM64 2/3	20	-82.5	-81
	QAM64 3/4	20.9	-81.5	-80

1.5.2 Base Station 2.X GHz Antennas (Optional)

Table 1-4: Base Station 2.X GHz Antennas, Electrical Specifications

Item	Description
BS ANT 60/2.X V	16.5 dBi minimum in the 2.3-2.7 GHz band, 60°AZ x 7°EL sector antenna, vertical polarization, compliance with ETSI EN 301 525 V.1.1.1 (2000-06) CS and RoHS
BS ANT 90/2.X V	15.5 dBi minimum in the 2.3-2.7 GHz band, 90°AZ x 7°EL sector antenna, vertical polarization, compliance with ETSI EN 301 525 V.1.1.1 (2000-06) CS and RoHS
BS ANT 120/2.X V	14 dBi minimum in the 2.3-2.7 GHz band, 120°AZ x 7°EL sector antenna, vertical polarization, compliance with ETSI EN 301 525 V.1.1.1 (2000-06) CS and RoHS
BS ANT 60/2.X H	16.5 dBi minimum in the 2.3-2.7 GHz band, 60°AZ x 7°EL sector antenna, horizontal polarization, compliance with ETSI EN 301 525 V.1.1.1 (2000-06) CS and RoHS
BS ANT 90/2.X H	15.5 dBi minimum in the 2.3-2.7 GHz band, 90°AZ x 7°EL sector antenna, horizontal polarization, compliance with ETSI EN 301 525 V.1.1.1 (2000-06) CS and RoHS
BS ANT 120/2.X H	14 dBi minimum in the 2.3-2.7 GHz band, 120°AZ x 7°EL sector antenna, horizontal polarization, compliance with ETSI EN 301 525 V.1.1.1 (2000-06) CS and RoHS
BS ANT 60/2.X DP	2 x 17 dBi minimum in the 2.3-2.7 GHz band, 65°AZ x 7°EL sector antenna, dual slant +/- 45° polarization, compliance with ETSI EN 302 085 CS2 and RoHS
BS ANT 90/2.X DP	2 x 15.5 dBi minimum in the 2.3-2.7 GHz band, 90°AZ x 8°EL sector antenna, dual slant +/- 45° polarization, compliance with ETSI EN 302 085 CS2 and RoHS
BS ANT 120/2.X DP	2 x 13 dBi minimum in the 2.3-2.7 GHz band, 120°AZ x 8°EL sector antenna, dual slant +/- 45° polarization, compliance with ETSI EN 302 085 CS2 and RoHS

1.5.3 Base Station 3.5 GHz Antennas (Optional)

Table 1-5: Base Station 3.5 GHz Antennas, Electrical Specifications

Item	Description
BS ANT 60V/3.3-3.8	16.5 dBi minimum in the 3.3-3.8 GHz band, 60° AZ x 10° EL, vertical polarization, compliant with ESTI EN 302 085 V.1.1.2 (2001-02) CS2.
BS ANT 90V/3.3-3.8	15 dBi typical in the 3.3-3.8 GHz band, 90° AZ x 9° EL, vertical polarization, compliant with ESTI EN 302 085 V.1.1.2 (2001-02) CSI,CS2,CS3
BS ANT 120/3.5V	14 dBi typical in the 3.3-3.7 GHz band, 120° AZ x 6.7° EL, vertical polarization, compliant with ESTI EN 302 085 V.1.2.3 (2005-09) CS1.
BS ANT 60/3.5H	16 dBi typical in the 3.4-3.6 GHz band, 60° AZ x 9° EL, horizontal polarization, compliant with EN 302 085, V1.1.1 CS3
BS ANT 90/3.5H	14 dBi typical in the 3.4-3.6 GHz band, 85° AZ x 9° EL, horizontal polarization, compliant with EN 302 085, V1.1.1 CS3
BS ANT 60/3.X DP	2 x 16.5 dBi minimum in the 3.3-3.8 GHz band, 65°AZ x 7°EL sector antenna, dual slant +/- 45° polarization, compliance with ETSI EN 302 085 CS2 and RoHS
BS ANT 90/3.X DP	2 x 15.5 dBi minimum in the 3.3-3.8 GHz band, 90°AZ x 7°EL sector antenna, dual slant +/- 45° polarization, compliance with ETSI EN 302 085 CS2 and RoHS
BS ANT 120/3.X DP	2 x 13 dBi minimum in the 3.3-3.8 GHz band, 120°AZ x 7°EL sector antenna, dual slant +/- 45° polarization, compliance with ETSI EN 302 085 CS2 and RoHS
Omni ANT 3.4-3.6	10 dBi typical in the 3.4-3.6 GHz band, 360° AZ x 9° EL, vertical polarization

1.5.4 AU-IDU to AU-ODU Communication

Table 1-6: AU-IDU to AU-ODU Communication

Item	Description
IF Frequency	■ Tx: 240 MHz ■ Rx: 140 MHz
Ref Synchronization Frequency	64 MHz
Bi-Directional Control Frequency	14 MHz
IF cable Impedance	50 ohm
Maximum IF cable Attenuation	10 dB @ 240 MHz 7.5 dB @ 140 MHz 8 dB @ 64 MHz

Table 1-6: AU-IDU to AU-ODU Communication

Item	Description
Minimum IF cable Shielding Effectiveness	90 dB in the 10-300 MHz band
Maximum IF cable Return Loss	20 dB in the 10-300 MHz band
Maximum IF cable DC Resistance	1.5 ohm

1.5.5 Data Communication (Ethernet Ports)

Table 1-7: Data Communication (Ethernet Ports)

Item	Description	
Standard Compliance	IEEE 802.3 CSMA/CD	
Maximum Packet Size	1550 Bytes (including 4 CRC bytes and 4 VLAN tag bytes)	
Speed	Data Port	100/1000 Mbps, Full Duplex
	Management Port	10/100 Mbps, Half/Full Duplex with Auto Negotiation

1.5.6 Configuration and Management

Table 1-8: Configuration and Management

Item	Description
Out Of Band (OOB) Management	■ Telnet via Management port ■ SNMP via Management port ■ Monitor port
In Band (IB) Management via Data Port	■ SNMP ■ Telnet
SNMP Agents	SNMP ver 1 client MIB II (RFC 1213), Private BreezeMAX MIBs
Authentication and Authorization	RADIUS
Software upgrade	Using TFTP
Configuration upload/download	Using TFTP

1.5.7 Standards Compliance, General

Table 1-9: Standards Compliance, General

Type	Standard
EMC	■ ETSI EN 301 489-1/4 ■ ETSI EN 300-385
Safety	■ EN 60950-1 ■ UL 60 950-1
Environmental	ETS 300 019: ■ Part 2-1 T 1.2 & part 2-2 T 2.3 for indoor & outdoor ■ Part 2-3 T 3.2 for indoor ■ Part 2-4 T 4.1E for outdoor
Radio	■ ETSI EN 301 753 V.1.1.1 ■ ETSI EN 301 021 V.1.6.1 ■ FCC 04-135 ■ FCC 27.53

1.5.8 Environmental

Table 1-10: Environmental Specifications

Type	Unit	Details
Operating temperature	Outdoor units	-40°C to 55°C
	Indoor equipment	0°C to 40°C
Operating humidity	Outdoor units	5%-95% non condensing, Weather protected
	Indoor equipment	5%-95% non condensing

1.5.9 Services

Table 1-11: Services

Item	Description
Max number of Services per BST	4,095 (0ne or several services may be defined per subscriber, one or more subscribers can be supported per SU)
Min number of data connections per Service	2 (1 uplink, 1 downlink)
Max number of data connections per Service	8 (4 uplink, 4 downlink)
Max number of data connections per SU	126
Max number of data connections per AU	3999 - 3 x number of SUs (3 connections are reserved for each SU)
Max number of SUs per AU	510
Max number of AUs per BST	7
Max number of MAC addresses in Bridging Table	BST: 6,000 SU: 512 (Aging time is configurable. The default is 3 minutes for SU, 10 minutes for NPU)
Max number of VLANs per Service	16
Max number of VLANs per SU	16
Max number of VLANs (VPL IDs) per BST	1,024
Max number of concurrent voice calls per Voice/L2 Service	50
Max number of concurrent voice calls per AU	300

1.5.10 Physical and Electrical

1.5.10.1 Mechanical Specifications, Base station Equipment

Table 1-12: Mechanical Specifications, Base Station Equipment

Unit	Dimensions (cm)	Weight (kg)
BST-SH	8U ETSI type shelf, 8U x 43.19 x 24	6.9 (excluding AVU)
PIU	3U x 5HP x 16	0.35
PSU	3U x 8HP x 16	0.7
NPU	6U x 7HP x 16	0.7
AU-IDU-4CH	6U x 7HP x 16	
AU-ODU-HP	31.5 x 16 x 16	5.5
AVU	2U x 84HP x 16	1.7
Power Feeder panel	1U ETSI type panel	0.14
Power Feeder Module	15.7 x 14.6 x 3.17	0.6
GPS Adapter	15.7 x 14.6 x 3.17	0.4
Outdoor GPS Receiver	Tubular enclosure, 15.5 D x 12.7 H	0.363
Indoor GPS Receiver	1U x 30.8 x 21.3	1.4

* 1U=44.45 mm (1.75"), 1HP=5.08 mm (0.2")

1.5.10.2 Electrical Specifications, Base station Equipment

Table 1-13: Electrical Specifications, Base Station Equipment

Unit	Details
Power Source	-40.5 to -60 VDC
PIU	16W maximum (active PIU)
PSU	200W maximum output power Efficiency: 80% minimum
NPU	72W maximum, 50W typical, including power required for GPS Adapter (1.2W maximum) and Outdoor GPS Receiver (6W maximum)
AU-IDU	46W maximum, 39W typical
AU-ODU-HP	82W maximum, 75W typical
AVU	24W maximum, 23W typical

Table 1-13: Electrical Specifications, Base Station Equipment

Unit	Details
ODU Power Feeder	Power Source: -40.5 to -60 VDC Power Dissipation: 2W per channel
Chassis with 3 AU-IDUs (excluding ODUs and Power Feeders)	310W maximum (1 NPU, 3 AU-IDUs, 1+1 PIUs, 2+1 PSUs)
Base station with 3 AU-IDUs, including 1 ODU per AU-IDU	555W maximum (1 NPU, 3 AU-IDUs with 1 ODU per AU-IDU, 1+1 PIUs, 2+1 PSUs)
Base station with 3 AU-IDUs, including 2 ODUs per AU-IDU	800W maximum (1 NPU, 3 AU-IDUs with 2 ODUs per AU-IDU, 1+1 PIUs, 2+1 PSUs)
Base station with 3 AU-IDUs, including 4 ODUs per AU-IDU	1300W maximum (1 NPU, 3 AU-IDUs with 4 ODUs per AU-IDU, 1+1 PIUs, 2+1 PSUs, 2 Power Feeders)
Chassis with 4 AU-IDUs (excluding ODUs and Power Feeders)	366W maximum (1 NPU, 4 AU-IDUs, 1+1 PIUs, 2+1 PSUs)
Base station with 4 AU-IDUs, including 1 ODU per AU-IDU	690W maximum (1 NPU, 4 AU-IDUs with 1 ODU per AU-IDU, 1+1 PIUs, 2+1 PSUs)
Base station with 4 AU-IDUs, including 2 ODUs per AU-IDU	1025W maximum (1 NPU, 4 AU-IDUs with 2 ODUs per AU-IDU, 1+1 PIUs, 2+1 PSUs, 1 Power Feeder)
Base station with 4 AU-IDUs, including 4 ODUs per AU-IDU	1700W maximum (1 NPU, 4 AU-IDUs with 4 ODUs per AU-IDU, 1+1 PIUs, 2+1 PSUs, 3 Power Feeders)
Full Chassis with 6 AU-IDUs (excluding ODUs and Power Feeders)	480W maximum (1 NPU, 6 AU-IDUs, 1+1 PIUs, 3+1 PSUs)
Full Base station with 6 AU-IDUs, including 1 ODU per AU-IDU	975W maximum (1 NPU, 6 AU-IDUs with 1 ODU per AU-IDU, 1+1 PIUs, 3+1 PSUs)
Full Base station with 6 AU-IDUs, including 2 ODUs per AU-IDU	1480W maximum (1 NPU, 6 AU-IDUs with 2 ODUs per AU-IDU, 1+1 PIUs, 3+1 PSUs, 2 Power Feeders)
Base station with 6 AU-IDUs, including 4 ODUs per AU-IDU	2500W maximum (1 NPU, 6 AU-IDUs with 4 ODUs per AU-IDU, 1+1 PIUs, 3+1 PSUs, 5 Power Feeders)
GPS Adapter	12 VDC from the NPU, 1.2W maximum
Indoor GPS Receiver	Power Source: -36 to -72 VDC Power Dissipation: 20W maximum, 12W typical
Outdoor GPS Receiver	12 VDC from the NPU via the GPS Adapter, 6W maximum

1.5.10.3 Connectors, Base station Equipment

Table 1-14: Connectors, Base Station Equipment

Unit	Connector	Description
PIU	-48V	3 pin/40A D-Type male Amphenol P/N 717TWA3W3PHP2V4RRM6
NPU	DATA	100/1000Base-T (RJ-45) with 2 embedded LEDs. Cable connection to a PC: Crossed Cable connection to a hub: Straight
	MGMT	10/100Base-T (RJ-45) with 2 embedded LEDs. Cable connection to a PC: Crossed Cable connection to a hub: Straight
	GPS/SYNC IN	15-pin micro D-Type jack
	GPS/SYNC OUT	15-pin micro D-Type jack
	ALRM IN	9-pin micro D-Type jack
	ALRM OUT	9-pin micro D-Type jack
	MON	3-pin low profile jack
AU-IDU	ODU 1, ODU 2	2 x TNC jack, lightning protected
AU-ODU, AU-ODU-HP	IF	TNC jack, lightning protected
	ANT	N-Type jack, 50 ohm, lightning protected
ODU Power Feeder	ODU 1 -4	4 x TNC jack, lightning protected
	IDU 1-4	4 x TNC jack, lightning protected
	Power	3 pin/20A D-Type male, Amphenol P/N
GPS Adapter	BASE STATION INTERFACE	15-pin D-Type jack
	IDU GPS CMD	9-pin D-Type jack
	IDU GPS 1PPS IN	BNC jack
	ODU GPS	RJ-45 jack

Table 1-14: Connectors, Base Station Equipment

Unit	Connector	Description
Indoor GPS Receiver	POWER	4 pins power plug
	TIME OF DAY CHANNEL	9-pin D-Type jack
	COMMAND CHANNEL	9-pin D-Type jack
	2.048MHz	BNC jack
	1PPS	BNC jack
	ANTENNA	TNC jack
Outdoor GPS Receiver		12-pin round plug

1.5.10.4 Base Station 2.X GHz Antennas, Mechanical Specifications

Table 1-15: Base Station 2.X GHz Antennas, Mechanical Specifications

Unit	Description	Dimensions (cm)	Weight (kg)
BS ANT 60/2.X V	Downtilt Mounting Kit: 2" to 4.5" pole Connector: N-Type female	109.3 x 21.3 x 12.4	5 maximum
BS ANT 90/2.X V	Downtilt Mounting Kit: 2" to 4.5" pole Connector: N-Type female	109.3 x 21.3 x 12.2	5 maximum
BS ANT 120/2.X V	Downtilt Mounting Kit: 2" to 4.5" pole Connector: N-Type female	109.3 x 20.5 x 11.9	5 maximum
BS ANT 60/2.X H	Downtilt Mounting Kit: 2" to 4.5" pole Connector: N-Type female	109.3 x 21.3 x 12.4	5 maximum
BS ANT 90/2.X H	Downtilt Mounting Kit: 2" to 4.5" pole Connector: N-Type female	109.3 x 21.3 x 12.2	5 maximum
BS ANT 120/2.X H	Downtilt Mounting Kit: 2" to 4.5" pole Connector: N-Type female	109.3 x 20.5 x 11.9	5 maximum
BS ANT 60/2.X DP	Downtilt Mounting kit: 4 to 12 cm pole Connector: 2 x N-Type female	100 x 12 x 5	2 maximum
BS ANT 90/2.X DP	Downtilt Mounting kit: 4 to 12 cm pole Connector: 2 x N-Type female	100 x 12 x 5	2 maximum
BS ANT 120/2.X DP	Downtilt Mounting kit: 4 to 12 cm pole Connector: 2 x N-Type female	100 x 17 x 9	5 maximum

1.5.10.5 Base Station 3.5 GHz Antennas, Mechanical Specifications

Table 1-16: Base Station 3.5 GHz Antennas, Mechanical Specifications

Unit	Description	Dimensions (cm)	Weight (kg)
BS ANT 60V/3.3-3.8	Mounting kit: 2" to 4" pole Connector: N-Type female	50 x 20 x 3	1.5
BS ANT 90V/3.3-3.8	Mounting kit: 2" to 4" pole Connector: N-Type female	53.6 x 36 x 3	2.3
BS ANT 120/3.5V	Mounting kit: 0.75" to 2" pole Mechanical tilt: 0° to -30°. Connector: N-Type female	76.2 x 8.3 x 7.6	2.0
BS ANT 60/3.5H	Mounting kit: 2" to 4" pole Connector: N-Type female	48 x 20 x 4	2
BS ANT 90/3.5H	Mounting kit: 2" to 4" pole Connector: N-Type female	60 x 25 x 5.5	2
BS ANT 60/3.X DP	Downtilt Mounting kit: 4 to 12 cm pole Connector: 2 x N-Type female	85.1 x 16 x 6.1	2 maximum
BS ANT 90/3.X DP	Downtilt Mounting kit: 4 to 12 cm pole Connector: 2 x N-Type female	85.1 x 16 x 6.1	2 maximum
BS ANT 120/3.X DP	Downtilt Mounting kit: 4 to 12 cm pole Connector: 2 x N-Type female	68.8 x 17 x 14.5	4 maximum
Omni ANT 3.4-3.6	Mounting bracket: 30 to 53 mm pole. Connector: N-Type female	67.5 tubular, 2 diameter	0.3

2

Chapter 2 - Installation Guidelines

In This Chapter:

- “Installing the AU-ODU” on page 28
- “Installing the Base Station Equipment” on page 37
- “Installing the ODU Power Feeder” on page 54
- “Installing the GPS Adapter” on page 58

NOTE

Refer to the BreezeMAX Base Station Installation Manual for more detailed instructions on installation of the Base Station and its components.

2.1 Installing the AU-ODU

The following sections describe how to install the AU-ODU, including pole mounting the ODU and connecting the cables.

2.1.1 AU-ODU Installation Requirements

2.1.1.1 AU-ODU Packing List

- ODU: Any of the following:

Table 2-1: AU-ODU Types

Item	Description
BMAX-BST-AU-ODU-HP-2.3	High Power AU-ODU operating in the 2.3 GHz band (2300-2360 MHz)
BMAX-BST-AU-ODU-HP-2.3-WCS	High Power AU-ODU operating in the 2.3 GHz band, complying with WCS limitations (2305-2315, 2350-2360 MHz)
BMAX-BST-AU-ODU-HP-2.5-A1	High Power AU-ODU operating in the 2.5 GHz A1 band (2496-2602 MHz)
BMAX-BST-AU-ODU-HP-2.5-A2	High Power AU-ODU operating in the 2.5 GHz A2 band (2590-2690 MHz)

- Pole mounting kit

2.1.1.2 Additional Installation Requirements

The following items are also required to install the ODU:

- IF cable with two TNC connectors* (see Section 2.1.3 for details on IF cable types and length).
- Antenna* and RF cable* for connecting the antenna to the AU-ODU.
- Grounding cable with an appropriate termination.
- Installation tools and materials, including appropriate means (e.g. a 1" to 4" pole) for installing the AU-ODU and antenna.
- An “H” kit for installation of up to 4 ODUs and 4 antennas that serve a single sector is optionally available*.

NOTE

Items marked with an asterisk (*) are available from Alvarion.

2.1.2 Guidelines for Positioning the AU-ODU

This section provides key guidelines for selecting the optimal installation locations for the AU-ODU and its antenna.

CAUTION

ONLY experienced installation professionals who are familiar with local building and safety codes and, wherever applicable, are licensed by the appropriate government regulatory authorities should install outdoor units and antennas.

Failure to do so may void the BreezeMAX product warranty and may expose the end user or Service Provider to legal and financial liabilities. Alvarion and its resellers or distributors are not liable for injury, damage or regulation violations associated with the installation of Outdoor Units or antennas.

Select the optimal locations for the equipment using the following guidelines:

- The ODU can be either pole or wall mounted. Its location should enable easy access to the unit for installation and testing.
- The higher the placement of the antenna, the better the achievable link quality.
- The antenna should be installed so as to provide coverage to all Subscriber Units within its service area.

NOTE

The recommended minimum distance between any two antennas in neighboring sectors is 0.5 meters.

The minimum distance between any two antenna in the same sector (space diversity configuration) is 1.3 meters.

- The ODU should be installed as close as possible to the antenna.

NOTE

An “H” kit for installation of up to 4 ODUs and 4 antennas that serve a single sector is optionally available from Alvarion. Refer to the detailed Base Station Installation Manual for information on installing the “H” accessory.

2.1.3 IF Cables

The AU-ODU is connected to the Micro Base Station (or to the ODU Power Feeder) via an IF cable carrying both signals and power. The maximum permitted attenuation of the IF cable at applicable frequencies, its screening effectiveness and its maximum permitted DC resistance (the sum of the DC resistance of the inner and outer conductors) are provided in the following table.

Table 2-2: IF Cables Requirements

Item	Description
Screening Effectiveness	90 dB minimum in the 10-300 MHz band.
IF cable Impedance	50 ohm
Maximum IF cable Attenuation	10 dB @ 240 MHz 7.5 dB @ 140 MHz 8 dB @ 64 MHz
Maximum IF cable DC Resistance	1.5 ohm
Maximum IF cable Return Loss	20 dB in the 10-300 MHz band

To comply with the required screening effectiveness requirement, it is recommended to use double shielded cables. The following table provides details on maximum length for some popular cables.

Table 2-3: Maximum IF Cable Length (Double Shielded Cables)

Cable	Maximum Length for AU-ODU-HP
LMR-195	30 meters
LMR-240	60 meters
LMR-400	150 meters

2.1.4 Pole Mounting the ODU

The ODU can be mounted on a 1" to 4" pole using one of the following options:

- Special clamps and threaded rods are supplied with each unit. There are two pairs of threaded holes on the back of the unit, enabling to use the clamps for mounting the unit on diverse pole diameters.

- The protrusions with grooves on the top backsides of the unit, and the protrusion on the bottom backside, enable the use of 9/16" wide metal bands (not included with the package) to secure the unit to a pole.

NOTE

Install the unit with the bottom panel, which includes the LEDs, facing downward.

2.1.4.1 Pole Mounting the AU-ODU-HP Using Clamps

Figure 2-1 illustrates the method of mounting a High Power AU-ODU-HP on a pole, using the clamps and threaded rods.

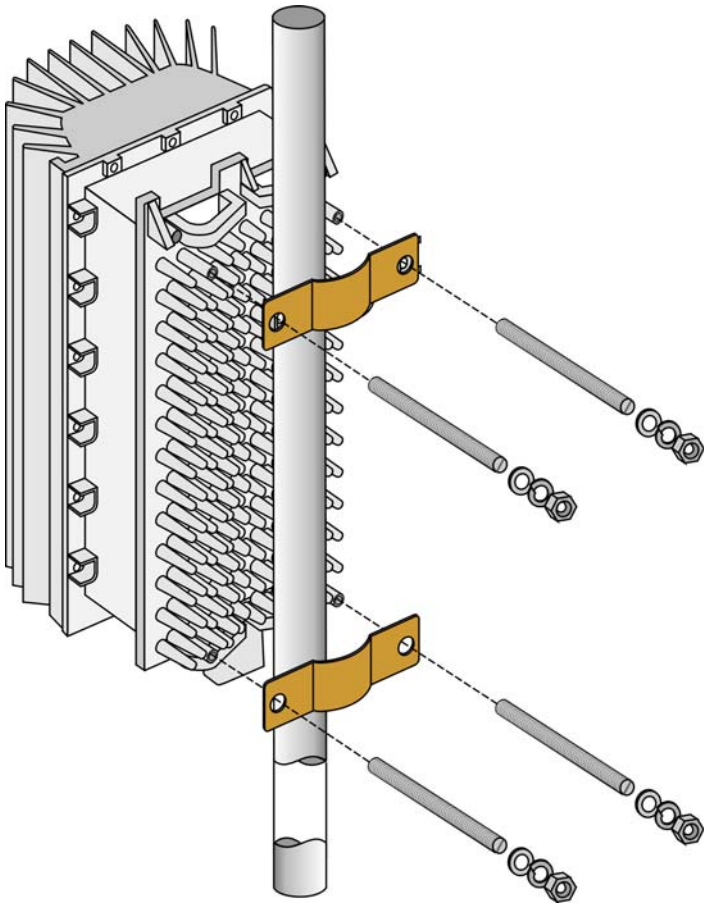

Figure 2-1: AU-ODU-HP Pole Installation Using Special Clamps

NOTE

There is a groove on one end of the threaded rod. Insert the threaded rods with the grooves pointing outward, as these grooves enable you to use a screwdriver to fasten the rods to the unit.

2.1.4.2 Pole Mounting the AU-ODU-HP Using Metal Bands

Figure 2-2 illustrates the method of mounting a High Power AU-ODU-HP on a pole, using metal bands.

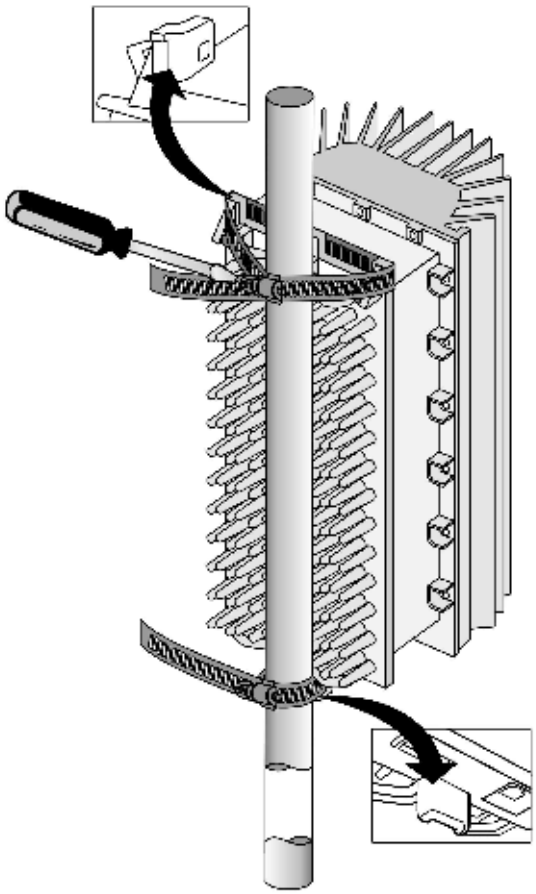

Figure 2-2: AU-ODU-HP Pole Installation Using Metal Band

2.1.5 AU-ODU

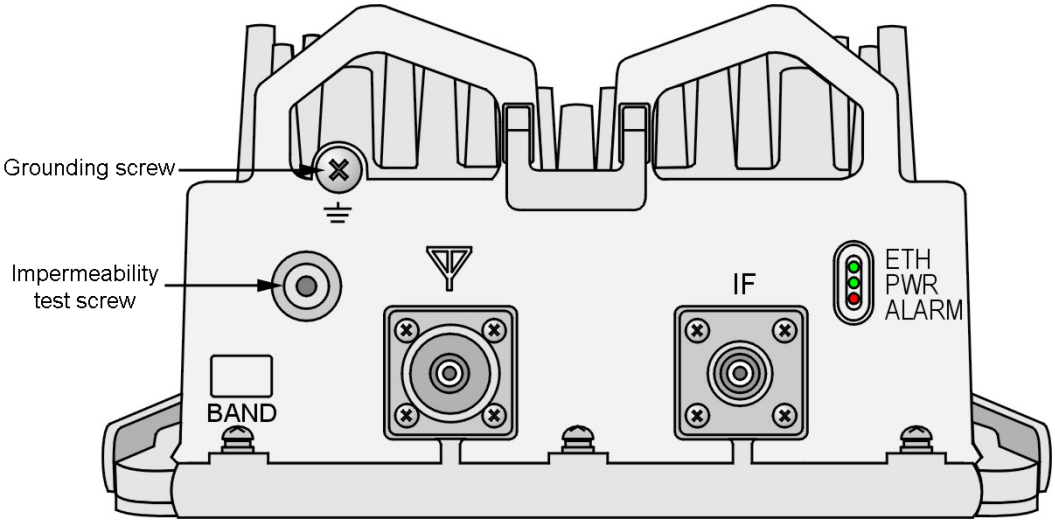

Figure 2-3: Bottom Panel of the AU-ODU

CAUTION

Do not open the impermeability test screw - you may impair the sealing of the unit against moisture and humidity.

Table 2-4: AU-ODU LEDs

Name	Description	Functionality
PWR	Power indication	■ Off - Power failure ■ Green - Power to ODU is OK, internal 3.3 VDC power supply is OK.
ALARM	IDU-ODU communication and synthesizer status indication	■ Off - IDU-ODU communication is OK, synthesizer is locked. ■ Green - IDU-ODU communication failure or synthesizer is not locked
ETH	Not Used	

Table 2-5: AU-ODU Connectors

Name	Connector	Functionality
IF	TNC jack	Connection to the AU-IDU/Micro Base Station/ODU Power Feeder

Table 2-5: AU-ODU Connectors

Name	Connector	Functionality
ANT	N-Type jack, 50 ohm	Connection to an external antenna
(GND)	Grounding screw	Connection to ground (earth)

2.1.6 Connecting the Cables

2.1.6.1 Connecting the Grounding Cable

The Grounding screw (marked) is located on the bottom panel of the outdoor unit.

To connect the grounding cable:

1. Connect one end of a grounding cable to the grounding screw and tighten the grounding screw firmly.
2. Connect the other end of the grounding cable to a good ground (earth) connection.

2.1.6.2 Connecting the Antenna Cable

To connect the RF cable:

1. Connect one end of the coaxial RF cable to the RF connector (marked) located on the bottom panel of the unit.
2. Connect the other end of the RF cable to the antenna.
3. The RF connectors should be properly sealed to protect against rain and moisture.

2.1.6.3 Connecting the IF Cable

To connect the IF cable:

1. Connect one end of the coaxial IF cable to the IF connector on the bottom panel of the unit.

2. Verify that the length of the IF cable is sufficient to reach the AU-IDU/Power Feeder. See IF cable length limitation in Section 2.1.3.
3. The IF cable connector should be properly sealed to protect against rain and moisture.
4. Route the cable to the location selected for the indoor equipment.

2.2 Installing the Base Station Equipment

2.2.1 BST Installation Requirements

2.2.1.1 Packing List

- Base Station Chassis:
  - BMAX-BST-SH Base Station Chassis
  - BMAX-BST-AVU Air Ventilation Unit (installed)
  - Cables Tray kit
  - 2.5 meter DC cable
- BMAX-BST-PIU (1 or 2 per chassis) Power Interface Unit(s)
- 2.5 meter DC cable (for a redundant PIU. One cable is supplied with each chassis)
- BMAX-BST-PSU (up to 4 per chassis) Power Supply Unit(s)
- BMAX-BST-NPU Network Processing Unit and Monitor cable
- BMAX-BST-AU-IDU-4CH (up to 6 per chassis) Access Unit Indoor Unit(s)

2.2.1.2 Additional Installation Requirements

The following items are also required to install the BST:

- Ethernet cable (straight) for connecting the NPU to a Hub/Switch.

NOTE

The maximum length of the Ethernet cable is 100m when operating at 100 Mbps and 70m when operating at 1 Gbps.

- A grounding cable with appropriate terminations for connecting the chassis to the rack or another ground (earth) connection.
- For installation in a 21" ETSI rack: Two 21" ETSI rack adapters

- A portable PC for configuring parameters using the Monitor cable (supplied with the NPU)
- Other installation tools and materials

2.2.2 BMAX-BST-SH Chassis Slot Assignments

The Base Station chassis comprises 6 3U high slots and 9 6U high slots, as shown in Figure 2-4.

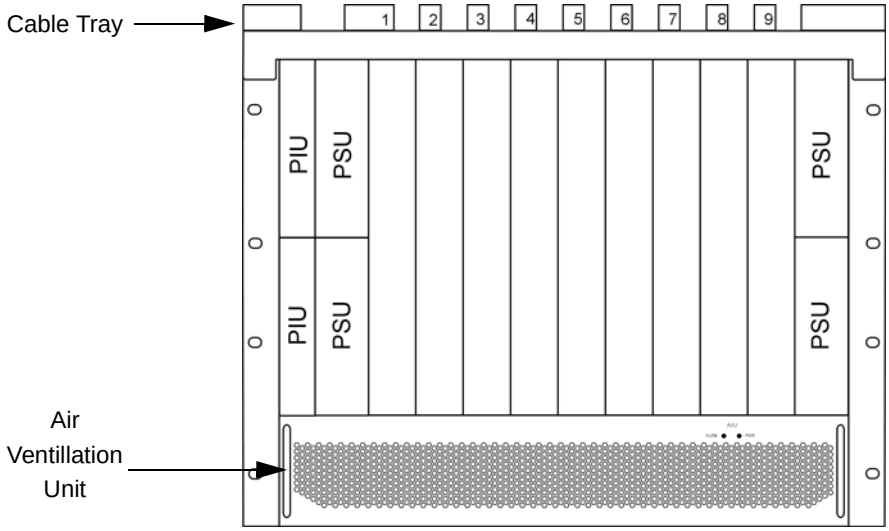

Figure 2-4: BMAX-BST-SH Chassis Slot Assignments

The Cable Tray (the installation kit is supplied with the chassis) should be installed on the top of the chassis front to enable convenient routing of cables connecting to power source(s), outdoor unit(s) and other equipment.

To enable power source and/or Power Interface Unit 1+1 redundancy, two PIU modules can be installed in the designated slots. If a single PIU module is used, it can be inserted into either one of the two available slots.

The number of installed PSU modules depends on the specific configuration (number of AUs) and NPU redundancy scheme (refer to Table 2-8). If less than 4 PSU modules are used, they can be installed in any of the designated slots.

The NPU should be installed in slot number 5 (slot numbers are marked on the Cable Guide). Slot 6 is reserved for a future redundant NPU.

Slots 1-4 and 7-9 can hold up to six AU-IDU modules.

Unused slots should remain covered until required.

2.2.3 Power Requirements

Use the following table to calculate worst-case power source requirements for the Base Station equipment (see also some examples in Table 1-13):

Table 2-6: Power Requirements, Base Station Equipment

Unit	Details
Power Source	-40.5 to -60 VDC
PIU	16W maximum (active PIU)
PSU	200W max output power Efficiency: 80% minimum
NPU	72W maximum, including power required for GPS Adapter (1.2W maximum) and Outdoor GPS Receiver (6W maximum)
AU-IDU-4CH	46W maximum
AU-ODU-HP	82W maximum (from PIU or Power Feeder)
AVU	24W maximum
Power Feeder	2W per Channel

NOTE

The PSU(s) do not supply power to the AU-ODUs. Up to 6 AU-ODUs can be powered directly from the power source via the PIU and the back plane. Additional AU-ODUs are powered from ODU Power Feeders.

2.2.4 HOT SWAP Support

The NPU, AU-IDU and new PIU modules includes a blue HOT SWAP LED and a micro-switch in the injector/ejector handle to support hot-swap control. After releasing the ejector's button, the HOT SWAP LED should turn on, indicating that power to/from the back-panel is disconnected and the module can be removed safely. For more details refer to Section 2.2.9.

2.2.5 Power Interface Unit (PIU)

The single Euro PIU module is the interface between the Base Station site's DC power source and the Base Station Chassis Power Supply Units and external ODUs, which receive power via the IDUs.

The PIU filters and stabilizes the Base Station input power and protects the system from power problems such as over voltage, surge pulses, reverse polarity connection and short circuits. It also filters high frequency interference (radiated emissions) and low frequency interference (conducted emissions) to the external

power source. Each Base Station chassis contains two slots for an optional 1+1 PIU redundancy. One PIU is sufficient to support a fully populated chassis. Two PIU modules provide redundant power feeding (two input sources) while avoiding current flow between the two input sources.

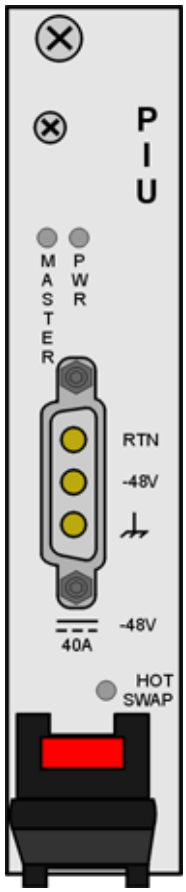

Figure 2-5: PIU Module Front Panel

NOTE

The HOT SWAP blue LED does not exist in first generation PIUs.

CAUTION

In a first generation PIU (without HOT SWAP LED), disconnect power from the PIU module before inserting/ejecting it to/from the chassis. Before disconnecting the power cable from the PIU, the power source must be disconnected to avoid irreversible damage due to a potential excessively high transient current.

In a second generation PIU (with HOT SWAP LED), disconnect power from the PIU module only after it is taken out from the chassis (or after the HOT SWAP LED is turned on). Connect power to the PIU only after it is fully inserted into the chassis.

Table 2-7: PIU LEDs

PWR and MASTER LEDs		PIU Status
PWR	**MASTER**	
Off	Off	Chassis is not connected to power
Red	Off	Power is not connected or power input is out of range or PIU card is damaged. Chassis is powered by the redundant PIU
Red	Green	Power input is out of range or PIU card is damaged. Chassis is powered by the PIU
Green	Off	Power to PIU is OK. PIU is in redundant mode and the chassis is powered from the other PIU
Green	Green	Power to PIU is OK. The chassis is powered from the PIU.
HOT SWAP		Off: Power from the module to the chassis is not disconnected, the PIU is not ready for removal Blue: Power from the module to the chassis can be disconnected and the PIU can be safely removed For instructions on using the HOT SWAP handles refer to Section 2.2.9.

2.2.5.1 Preparing a Power Cable

A 2.5m DC power cable is supplied with each chassis. Additional DC cables can be ordered from Alvarion. If necessary, use the following instruction to prepare a DC cable.

To prepare the power cable:

1. Use a cable capable of supporting a current of at least 40A. Use a cable with 2 x 8AWG (or thicker) wires for the power plus an additional 8AWG to 20AWG ground wire.
2. The matching power connector to be used is Amphenol D-type power P/N 177TWA/3W3/SP3Y with high power socket contacts P/N 17DM53744-1.
3. Connect the cable to the power connector as follows:
   - Pin 1 (RTN): Red (8 AWG min wire)
   - Pin 2 (-48V): Black (8 AWG min wire)
   - Pin 3 (⏚): Ground (shield) (8AWG-20AWG wire)
4. Attach suitable terminal rings to the side that connects to the power source.

2.2.6 Power Supply Unit (PSU)

The single Euro PSU module is a 48 VDC power supply unit. Each Base Station chassis can contain up to four PSU modules providing N+1 redundancy configurations.

The following table displays the number of PSU modules (excluding redundant units) required for various Base Station configurations:

Table 2-8: PSU Requirements, Configurations with one NPU (excluding PSU redundancy)

Number of AU-IDUs	Minimum Required Number of PSUs
1 - 2	1
3 - 4	2
5 -6	3

NOTE

The PSU(s) do not supply power to the AU-ODUs. The regular AU-ODUs are powered directly from the power source via the PIU and the back plane. The High Power AU-ODU-HPs are powered from an ODU Power Feeder.

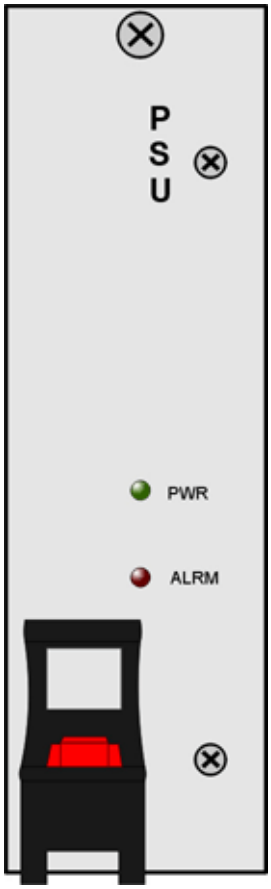

Figure 2-6: PSU Module Front Panel

Table 2-9: PSU LEDs

LED Status		Description
PWR	ALRM	
Off	Off	No power or fatal damage
Off	Red	Power input is out of range or PSU is damaged or PSU is inhibited by NPU
Green	Off	Power is OK and PSU operates properly

2.2.7 Access Unit Indoor Module (AU-IDU)

The double Euro Access Unit IDU module contains the wireless IEEE 802.16a MAC and modem and is responsible for the wireless network connection establishment and for bandwidth management. Each AU-IDU includes four PHY channels that can connect to AU-ODUs.

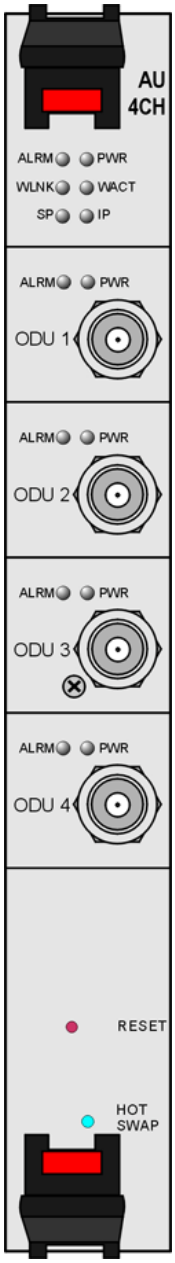

Figure 2-7: AU-IDU Module Front Panel

Table 2-10: AU-IDU LEDs

Name	Description	Functionality
PWR	Power indication	■ Off - AU-IDU is not powered ■ Red - AU-IDU power supply failed (low power) ■ Green - AU-IDU power is OK
ALRM	Alarm indication	■ Off - AU-IDU is OK ■ Red - AU-IDU failure
WLINK	Wireless link status indication	■ Off - No SU is associated ■ Green - At least one SU is associated
WACT	IDU transmission indication	■ Off - No IDU transmission ■ Green - IDU transmission OK
SP	Spare	Not Used
IP	IP activity indication	■ Off - No downlink (AU to SU) IP activity ■ Green (blinking) - Downlink (AU to SU) IP activity
ODU1 - ODU4 PWR	IDU to ODU Power Indication	■ Off - No IDU to ODU power output ■ Red - IDU to ODU power output failed ■ Green - IDU to ODU power output OK
ODU1 -ODU4 ALRM	IDU to ODU communication status	■ Off - IDU-ODU communication OK ■ Red - IDU-ODU communication failure
HOT SWAP	IDU readiness for hot swap removal	■ Off: Power to the module is not disconnected, the AU-IDU is not ready for removal ■ Blue: Power to the module can be disconnected and the AU-IDU can be safely removed For instructions on using the HOT SWAP handles refer to Section 2.2.9.

2.2.8 Network Processing Unit (NPU)

The NPU module serves as the central processing unit that manages the base station's components and the SUs served by it. It also aggregates the traffic from the AU modules and transfers it to the IP backbone through a dedicated Gigabit/Fast Ethernet interface.

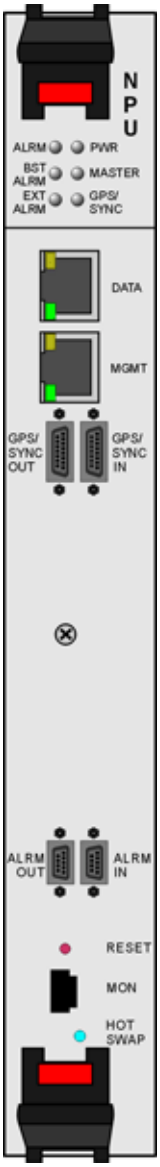

Figure 2-8: NPU Module Front Panel

Table 2-11: NPU Connectors

Name	Connector	Functionality
DATA	100/1000Base-T (RJ-45) with 2 embedded LEDs.	Connection to the backbone. Cable connection to a hub/switch/router: Straight
MGMT	10/100Base-T (RJ-45) with 2 embedded LEDs.	Connection to OOB management. Cable connection to a PC: Crossed Cable connection to a hub/switch/router: Straight
GPS/SYNC IN	15-pin micro D-Type jack	Connection to a GPS Adapter (or, in the future, to another NPU) that supplies synchronization signals.
GPS/SYNC OUT	15-pin micro D-Type jack	Not used currently. Supply of synchronization signals to another unit
ALRM-IN	9-pin micro D-Type jack	Not used currently. Connections to external alarm indicators (3 alarm inputs, NC or NO)
ALRM-OUT	9-pin micro D-Type jack	Not used currently. Connections for activation of external devices (4 dry contact pairs)
MON	3-pin low profile jack	Access for debugging and configuration using the Monitor program

Table 2-12: NPU LEDs

Name	Description	Functionality
PWR	Power indication	■ Off - NPU is not powered ■ Red - NPU power failure ■ Green - NPU power is OK
ALRM	NPU Alarm indication	■ Off - NPU is OK ■ Red - NPU failure
BST ALRM	Base Station chassis alarm indication	■ Off - All Base Station modules are OK ■ Red - Failure in one (or more) Base Station modules
EXT ALRM	External alarm indication	■ Off - No alarms ■ Red - Alarm received via the ALRM IN connector (not applicable in current release)
MASTER	Master/Slave operation indication	■ Off - Secondary NPU (backup). Not supported in current release. ■ Green - Primary NPU

Table 2-12: NPU LEDs

Name	Description	Functionality
GPS/SYNC	GPS/IF clock synchronization functionality indication	■ Off - GPS/IF clock synchronization is disabled ■ Green - GPS/IF clock is synchronization enabled
HOT SWAP	NPU readiness for hot-swap removal	■ Off: Power to the module is not disconnected, the NPU is not ready for removal ■ Blue: Power to the module can be disconnected and the NPU can be safely removed For instructions on using the HOT SWAP handles refer to Section 2.2.9.

2.2.9 Using the Hot Swap Injector/Ejector Handles

The Base Station modules include special handles for high-force insertion/extraction of modules. Each of the 6U high modules (NPU, AU-IDU) includes two such handles, whereas each of the 3U high-modules (PIU, PSU) includes a single handle at the bottom of the front panel.

The bottom injector/ejector handle of the NPU and AU-IDU modules includes a micro-switch to support hot-swap control. Second generation PIU modules also support hot-swap, as indicated by the HOT SWAP blue LED.

2.2.9.1 Inserting Modules

To insert a module with hot-swap support (NPU, AU-IDU, PIU):

1. Firmly push in the module into its intended slot (slot 5 for the NPU, slot 1-4, 7-9 for AU-IDU).
2. Press the handles up (the upper handle if available)/down (the lower handle) simultaneously until you hear the locking click and the red buttons are released. The blue HOT SWAP LED will briefly turn on (only in AU and NPU), indicating that the module is being powered up.

CAUTION

In a PIU with HOT SWAP LED, connect power to the PIU only after it is fully inserted into the chassis.

3. Secure the module in place by closing the screws at the top and bottom of the front panel.

NOTE

If a module is fully inserted without properly locking the handles, it will become operational. However, in this state the hot-swap mechanism is not supported. A warning message (trap) will be sent.

To insert a PSU or a PIU without HOT SWAP support:

CAUTION

In a PIU without HOT SWAP LED, disconnect power from the PIU module before inserting it to the chassis.

1. Firmly push in the module into its intended slot.
2. Press the handle down until you hear the locking click and the red button is released.
3. Secure the module in place by closing the screw at the top of the front panel.

2.2.9.2 Ejecting Modules

To eject a module with hot-swap support (NPU, AU-IDU, new PIU):

1. Release the screws at the top and the bottom of the front panel.
2. Press the handles' red button until the handles are unlocked.
3. Wait until the blue HOT SWAP LED turns on, indicationg that the module has been disconnected and can be removed.

CAUTION

In a PIU with HOT SWAP LED, disconnect power from the PIU module only after it is taken out from the chassis (or after the HOT SWAP LED is turned on).

4. Press the handles down (the upper handle)/up (the lower handle) until the module is unlocked, firmly hold the handles and take the module out of the chassis.

To eject a PSU or a PIU without HOT SWAP support:

CAUTION

In a PIU without HOT SWAP LED, disconnect power from the PIU module before ejecting it from the chassis. Before disconnecting the power cable from the PIU, the power source must be disconnected to avoid irreversible damage due to a potential excessively high transient current.

1. Release the screw at the top of the front panel.
2. Press the handle's red button until the handle is unlocked.
3. Press the handle up until the module is unlocked, firmly hold the handle and take the module out of the chassis.

2.2.10 Installing the Base Station Chassis and Modules

The indoor equipment should be installed as close as possible to the location where the IF cable(s) enters the building. The location of the indoor equipment should take into account its connection to the power source(s) and to the base station networking equipment.

To install the Base Station chassis and modules:

1. Attach the Cable Guide to the top panel of the chassis using the screws and washers supplied with the Cable Guide.
2. Install the chassis in a 19" cabinet. For installation in a 21" cabinet, attach suitable ETSI rack adapters to the chassis. To provide a sufficient space for the Cable Guide and to allow air flow for preventing over-heating, leave a free space of at least 1U between the upper covers of the chassis and other units in the cabinet.
3. Connect one end of a grounding cable to the ground terminal located on the rear panel of the chassis and firmly tighten the grounding screw. Connect the opposite end of the grounding cable to a ground connection or to the cabinet, if applicable.
4. Carefully insert the modules into the relevant slots. Secure the modules in their intended locations (refer to Section 2.2.9.1 for instructions on modules' insertion).
5. Place blank covers over all of the unused slots.
6. Connect the DATA port of the NPU to the backbone data equipment (use a straight Ethernet cable to connect to a hub/switch/router). The maximum

length of the Ethernet cable is 100m when operating at 100 Mbps and 70m when operating at 1 Gbps.

7 If the MGMT port will be used for remote management, connect it to the appropriate data equipment (use a straight Ethernet cable to connect to a hub/switch/router). The maximum length of the Ethernet cable is 100m.

8 Connect the DC power cable to the power jack of the PIU module. If a redundant PIU is installed, connect a DC power cable also to the second PIU module. Connect the power cord(s) to the 48 VDC power source(s), as follows.

- Connect the black wire to the 48 VDC contact of the power source.
- Connect the red wire to the + (Return) contact.
- Connect the ground wire to the ground.

9 For AU-ODUs that connect directly to AU-IDUs: Connect the IF cable(s) (already connected at the other end to the AU-ODU(s)) to the proper channels (ODU 1 to ODU 4 connectors) of the applicable AU-IDU module(s). If only a single AU-ODU per AU-IDU is used, connect the IF cable(s) to the appropriate ODU-1 connector(s). To avoid transmissions at undesired frequencies, verify that the frequency and bandwidth parameters are properly configured before connecting the IF cables.

For AU-ODU that are powered by a Power Feeder: Refer to Section 2.3.3.

CAUTION

A maximum of six AU-ODU-HP units can be powered directly from the Base Station (via the ODU connectors of AU-IDUs). Additional AU-ODU-HP units shauld be powered by ODU Power Feeder(s).

2.2.11 Air Ventilation Unit (AVU)

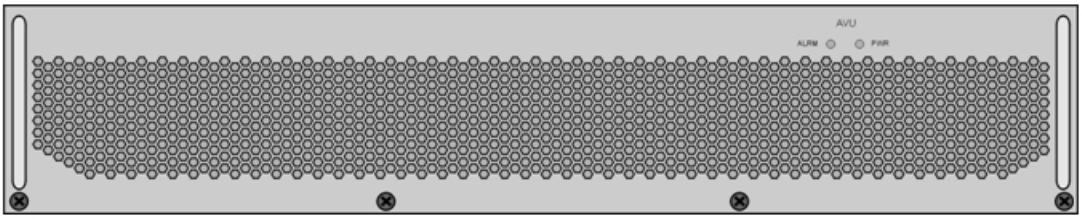

Figure 2-9: AVU Drawer Front Panel

The 2U high, 84 HP wide AVU includes a 1U high integral chamber for inlet airflow and a 1U high fan tray with an internal alarm module. To support a high availability Base Station, the fan tray includes 10 brush-less fans, where 9 fans are sufficient for cooling a fully loaded chassis. To further support high availability, the chassis can operate with the hot-swappable fan tray extracted from it for a period of time sufficient for replacing it (up to 10 minutes).

Table 2-13: AVU LEDs

LED Status		Description
PWR	**ALRM**	
Off	Off	No 5V power input
Red	Red	12V power failed
Green	Red	One or more fans have failed
Green	Off	AVU operates properly

If the red ALRM LED is on while the PWR LED is green, it indicates a failure of at least one fan. Although the Base Station chassis may continue operating with one failed fan, it is recommended to replace the AVU as soon as possible.

To replace an AVU drawer:

Release the 4 screws securing the AVU to the chassis.

Using the handle take out the faulty chassis.

Insert a new AVU drawer and close the screws. The replacement should be completed in less than 10 minutes.

2.2.11.1 Replacing an NPU

To minimize downtime and facilitate fast and easy NPU replacement, it is recommended to maintain an updated copy of the NPU configuration. Refer to Section 4.5.2.6 for details on preparing and uploading a backup file of the NPU configuration.

1. Release the screws at the top and the bottom of the NPU's front panel.
2. Press the handles' red button until the handles are unlocked.
3. Wait until the blue HOT SWAP LED turns on, indicating that the module has been disconnected and can be removed.
4. Press the handles down (the upper handle)/up (the lower handle) until the module is unlocked. Firmly hold the handles and take the module out of the chassis.
5. Disconnect all IF cables connecting the AU-IDUs to the AU-ODUs. This is necessary as the initial configuration of the new NPU is most probably inappropriate.
6. Firmly push the new NPU module into its intended slot (slot 5).
7. Press the handles up (the upper handle)/down (the lower handle) simultaneously until you hear the locking click and the red buttons are released. The blue HOT SWAP LED will briefly turn on, indicating that the module is being powered up.
8. Secure the module in place by closing the screws at the top and bottom of the front panel.
9. Download the backup file using a DOS based TFTP. Use the command: *tftp i <NPU port IP address> put <file name>*. The default IP address of the MGMT port is 10.0.0.1.
10. Use the monitor program to configure the IP parameters (IP address, Subnet Mask, Default Gateway Address) of the MGMT port. These parameters are not affected by the loaded file.
11. Reset the system.
12. Reconnect the IF cables.

2.3 Installing the ODU Power Feeder

2.3.1 Installation Requirements

2.3.1.1 Packing List

- A 19” panel (can hold up to three ODU Power Feeder modules).
- ODU Power Feeder module, including a DC power cable, four 0.5 meter IF cables and four screws.

2.3.1.2 Additional Installation Requirements

- A grounding cable with appropriate terminations for connecting the unit's ground terminal to the rack or to a ground connection.
- For installation in a 21" ETSI rack: two 21" ETSI rack adapters
- Other installation tools and materials

2.3.2 The ODU Power Feeder

The ODU Power Feeder is used to provide power (-48 VDC) to AU-ODU-HP High Power ODUs. It transfers transparently all signals between the AU-IDU and the ODU, while injecting DC power received from an external source. Each ODU Power Feeder unit can serve up to four High Power ODUs. Up to three ODU Power Feeder units can be installed in a 1U high Power Feeder panel.

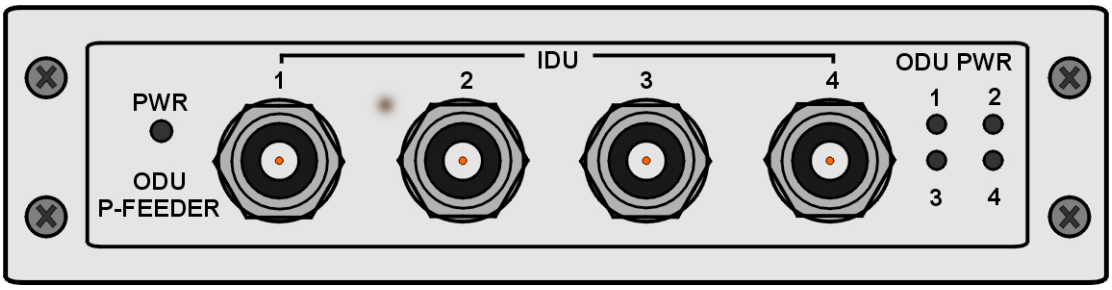

Figure 2-10: ODU Power Feeder Front Panel

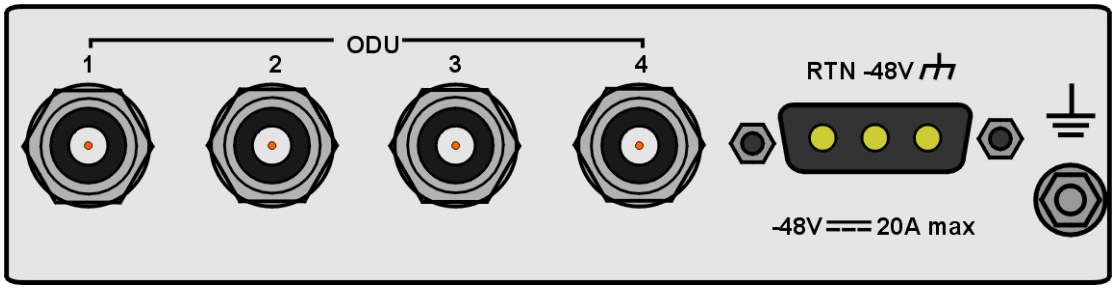

Figure 2-11: ODU Power Feeder Rear Panel

Table 2-14: ODU Power Feeder Connectors

Name	Connector	Functionality
IDU 1 - 4	4 x TNC jacks	Connection to ODU connectors of AU-IDUs/Micro Base Station
ODU 1 - 4	4 x TNC jacks	Connections to IF connectors of AU-ODU-HP units
-48V	3-pin D-Type power jack	Connection to DC power source
⏚ (GND)	Grounding Screw	Connection to ground (earth)

Table 2-15: ODU Power Feeder LEDs

Name	Description	Functionality
PWR	Input power indication	■ Off - ODU Power Feeder is not powered ■ Green - ODU Power Feeder power is OK
ODU PWR 1 - 4	Output power indications	■ Off - AU-ODU-HP is not connected ■ Red - Power output problem (short or overload) ■ Green - AU-ODU-HP is connected and powered

2.3.2.1 Preparing a Power Cable

A 2.5m DC power cable is supplied with each ODU Power Feeder module. Additional DC cables can be ordered from Alvarion. If necessary, use the following instruction to prepare a DC cable.

To prepare the power cable:

1. Use a cable capable of supporting a current of at least 10A. Use a cable with 2 x 10AWG (or thicker) wires for the power plus an additional 10AWG to 20AWG ground wire.
2. The matching power connector to be used is Amphenol D-type power P/N 177TWA/3W3/SP3Y with high power socket contacts P/N 17DM53744-1.
3. Connect the cable to the power connector as follows:
   - ◇ Pin 1 (RTN): Red (10 AWG min wire)
   - ◇ Pin 2 (-48V): Black (10 AWG min wire)
   - ◇ Pin 3 (⏚): Ground (shield) (10AWG-20AWG wire)
4. Attach suitable terminal rings to the side that connects to the power source.

2.3.3 Installing the ODU Power Feeder

The ODU Power Feeder should be installed as close as possible to the location where the IF cable(s) enters the building. The location of the ODU Power Feeder should take into account its connection to the power source and to the Base Station equipment.

To install the ODU Power Feeder:

1. The panel is supplied with blank covers. Release the nuts on the rear side of the panels to remove the blank cover(s) you want to replace with ODU Power Feeder module(s). Attach the ODU Power Feeder module(s) to the panel using the four screws supplied with each module.
2. Place the panel with the ODU Power Feeder module(s) on a shelf/desk or install it in a 19" cabinet, next to the Base Station equipment. For installation in a 21" cabinet, attach suitable ETSI rack adapters to the chassis.
3. Connect one end of a grounding cable to the grounding screw located on the rear panel of each ODU Power Feeder module and firmly tighten the grounding screw. Connect the opposite end of the grounding cable(s) to a ground (earth) connection or to the cabinet, if applicable.
4. Connect the IDU connector(s) to the appropriate ODU connector(s) of the AU-IDU(s) using the short (0.5 meter) IF cables supplied with the module.
5. Connect the power cord to the ODU Power Feeder's DC socket, located on the rear panel. Connect the other end of the power cord to the -48 VDC power source.
6. Connect the IF cable(s), that should already be connected at the other end to the AU-ODU-HP(s), to the appropriate ODU connector(s). To avoid transmissions at undesired frequencies, verify that the frequency and bandwidth parameters are properly configured before connecting the IF cables.

2.4 Installing the GPS Adapter

2.4.1 Installation Requirements

2.4.1.1 Packing List

- A 19” panel (can hold also ODU Power Feeder modules).
- GPS Adapter module, including a 2m NPU to GPS Adapter cable and four screws.

2.4.1.2 Additional Installation Requirements

- A grounding cable with appropriate terminations for connecting the unit's ground terminal to the rack or to a ground connection.
- For installation in a 21" ETSI rack: two 21" ETSI rack adapters
- Other installation tools and materials

2.4.2 The GPS Adapter

The GPS Adapter connects the different GPS units to the NPU, adapting the different interfaces. Future versions may include an internal GPS module that will allow an all-in-one low-cost solution. A future optional addition of OCXO in the GPS Adapter box may provide an improved hold over solution when the GPS is not synchronized. The GPS Adapter is powered by 12 VDC supplied by the NPU. The GPS Adapter is installed in a 1U high panel (the same panel that is used for the ODU Power Feeders).

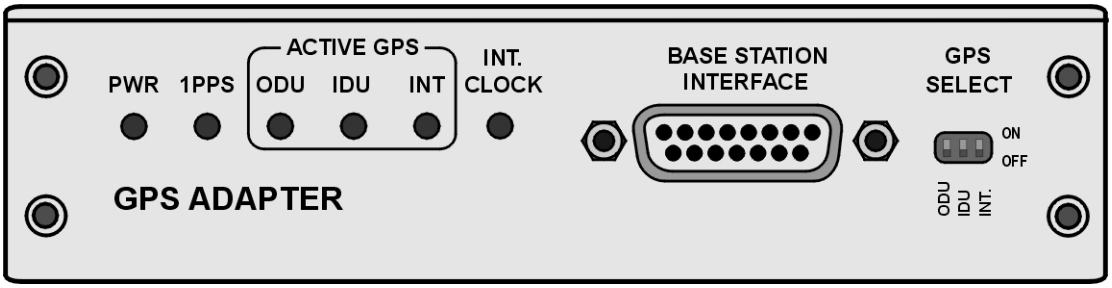

Figure 2-12: GPS Adapter Front Panel

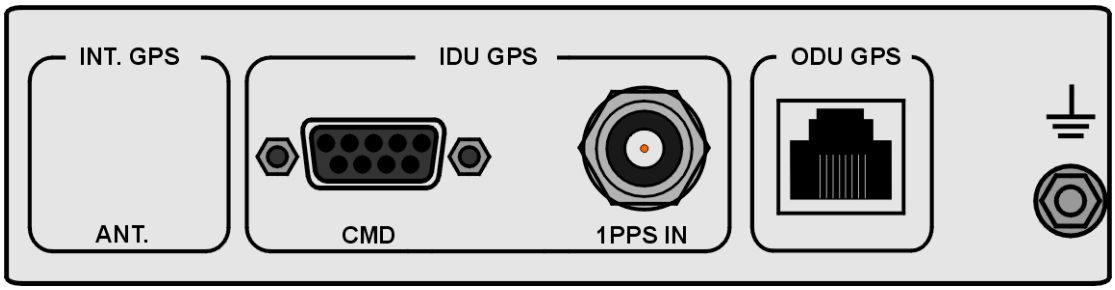

Figure 2-13: GPS Adapter Rear Panel

Table 2-16: GPS Adapter Connectors

Name	Connector	Functionality
BASE STATION INTERFACE	15 pin D-Type jack	■ 1PPS and 16MHz synchronization signals (LVDS interface) to the NPU ■ Power (12 VDC) from the NPU ■ Serial control signals (RS-442 interface) from the NPU
CMD	9 pin D-Type jack	Serial control signals (RS-232 interface) to the Indoor GPS Receiver.
1PPS IN	BNC jack	1PPS signal (TTL levels) from Indoor GPS Receiver

Table 2-16: GPS Adapter Connectors

Name	Connector	Functionality
ODU GPS	RJ-45 jack	■ 1PPS (RS-442 interface) from Outdoor GPS Receiver ■ Serial control signals (RS-422 interface) to Outdoor GPS Receiver ■ Power (12 VDC) to Outdoor GPS Receiver
⏚ (GND)	Grounding Screw	Connection to ground (earth)

Table 2-17: GPS Adapter LEDs

Name	Description	Functionality
PWR	Input power indication	■ Off - Power input failure ■ Green - 12 VDC power supply from NPU is OK
1PPS	1PPS signal indication	■ Blinking Green - 1PPS signal from GPS Receiver is detected ■ Red - 1PPS signal is not detected
Active GPS - ODU	ODU GPS selection indication	■ Green - indicates that the selected GPS Receiver: is ODU (Outdoor) ■ Off - ODU GPS Receiver is not selected
Active GPS - IDU	IDU GPS selection indication	■ Green - indicates that the selected GPS Receiver: is IDU (Indoor) ■ Off - IDU GPS Receiver is not selected
Active GPS - INT	INT GPS selection indication	■ Green - indicates that the selected GPS Receiver: is INT (Internal). Internal is not supported in current release. ■ Off - INT GPS Receiver is not selected
INT CLOCK	Internal clock source indication	■ Green - Internal 16MHz clock is ok (not supported in current release) ■ Red - Internal clock is not available or clock failure

2.4.3 Installing the GPS Adapter

To install the GPS Adapter:

1 The GPS Adapter is installed on the 1U high panel that can be used also for installation of ODU Power Feeder modules. The panel is supplied with blank

covers. Release the nuts on the rear side of the panel to remove the blank cover you want to replace with the GPS Adapter. Attach the GPS Adapter module to the panel using the four screws supplied with it.

2. Place the panel with the GPS Adapter (and optionally ODU Power Feeders) on a shelf/desk or install it in a 19" cabinet, next to the Base Station equipment. The distance from the Base Station equipment should allow connection of the 2 meters NPU to GPS Adapter cable. For installation in a 21" cabinet, attach suitable ETSI rack adapters to the panel.

3. Connect one end of a grounding cable to the grounding screw located on the rear panel of the GPS Adapter and firmly tighten the grounding screw. Connect the opposite end of the grounding cable to a ground (earth) connection or to the cabinet, if applicable.

4. Connect the NPU to GPS Adapter cable to the BASE STATION INTERFACE connector on the front panel of the GPS Adapter. Connect the other end of the cable to the GPS/SYNC IN connector of the NPU.

5. Select the GPS Receiver to be used using the GPS SELECT miniature DIP switches:

   - To use Outdoor GPS Receiver, move the ODU (left-most) switch to the ON (up) position. Make sure that the two other switches are in the OFF (down) position.
   - To use Indoor GPS Receiver, move the IDU (middle) switch to the ON (up) position. Make sure that the two other switches are in the OFF (down) position.
   - The INT (Internal) GPS Receiver option is not available in current release.

6. Connect the applicable cable(s) to the selected GPS Receiver.

NOTE

Refer to the documentation supplied with the GPS Receiver for instructions on how to install and connect it.

3

Chapter 3 - Commissioning

In This Chapter:

- "Configuring Basic Parameters of Base Station" on page 64
- "Operation Verification" on page 70

3.1 Configuring Basic Parameters of Base Station

3.1.1 NPU Parameters Required for Management

After completing the installation process, as described in the preceding chapter, some basic NPU parameters must be configured using the Monitor application via the MON port of the NPU. These parameters are necessary to enable remote management using SNMP or Telnet.

If the NPU is in the default factory configuration, or if the IP parameters of either the Data or Management port are known, you may configure the parameters using Telnet. You may also use BreezeLITE, provided you know the IP parameters of one port and the Authorized Managers list in the NPU is either empty (default) or includes the IP address of the BreezeLITE station.

Refer to Chapter 4 for information on how to access the Monitor application either via the MON port or via Telnet and how to use it.

NOTE

The default Installer password is "installer".

Refer to the BreezeLITE User Manual for information on how to use it.

The basic parameters are listed in Table 3-1. Refer to Chapter 4 for detailed information on the applicable parameters.

Table 3-1: Basic NPU Parameters

Management Option	Parameters
MGMT port	■ Management Port IP address ■ Management Port Subnet Mask ■ Management Port Gateway ■ Management Port Destination Subnet ■ Management Port Destination Subnet Mask ■ Management Port Management Traffic Enable/Disable

Table 3-1: Basic NPU Parameters

Management Option	Parameters
DATA port	■ Data Port IP address ■ Data Port Subnet Mask ■ Data Port Gateway ■ Data Port Management VLAN ID ■ Data Port Management Traffic Enable/Disable ■ Data Port Speed
Authorized Managers (per manager)	■ IP Address ■ Send Traps ■ Read Community ■ Write Community

The following are the guidelines for configuring the basic NPU parameters:

- All parameters of both ports should be configured. Otherwise, default values shall be used.
- If OOB management via a router connected to the Management port is used, the parameters should be configured to ensure different subnets for the Data port, the Management port (local OOB management) and the Management Port Destination. The Management Port Destination Subnet is the subnet behind a router connected to the Management port.

NOTE

It is highly recommended to use the Management port for local management only. Typically the port should be down (disconnected).

CAUTION

Do not configure the IP Address of the Management port to 0.0.0.0, as this will cause loss of management connectivity via the Data port.

- Authorized Manager(s) must be configured properly to enable remote management using AlvariSTAR (or another SNMP based application).

NOTE

If no Authorized Manager is defined in the device, it can be managed using SNMP by any station. If at least one Authorized Manager is defined, the device can be managed only by a station whose parameters match a defined Authorized Manager.

After the basic NPU parameters have been configured, the Base Station can be managed remotely using either Telnet or SNMP-based management.

To enable proper operation of the Base Station and all its components, the following parameters must also be configured:

NOTE

The following list includes only parameters that are mandatory for proper operation of the Base Station. Configuration of other parameters may be done either at the same time or later.

3.1.2 Base Station Configuration Parameters

- Operator ID
- Cell ID
- Duplex Mode (must be TDD)
- DL-UL Ratio
- External 1PPS Clock (must be enabled to support 1PPS from GPS)
- External 16MHz Clock (in this release must be disabled)

3.1.3 RADIUS Parameters

3.1.3.1 RADIUS General Parameters

- Shared Secret

3.1.3.2 RADIUS Authentication

At least one Authentication server must be defined to enable RADIUS-based provisioning of services.

- IP Address

- UDP Port

3.1.3.3 RADIUS Accounting

At least one Accounting server must be defined to enable RADIUS-based provisioning of services.

- IP Address
- UDP Port

3.1.4 Chain parameters

- Chain Number
- GPS Protocol

3.1.5 Radio Cluster

- Radio Cluster ID: Verify that all required Radio Cluster IDs are defined

3.1.6 ODU

Define the necessary ODUs. For each ODU, configure the following:

- ODU ID
- Associated Radio Cluster
- Configured ODU Frequency Band
- Tx Power
- Admin Status: Enable when completing the configuration process

3.1.7 AU

3.1.7.1 SW Files in NPU - Default SW File (Advanced Si)

- Name
- Action

The following must be configured for each AU:

3.1.7.2 Unit Control - SW Versions Control

3.1.7.2.1 SW File

- Name
- Action

3.1.7.2.2 SU SW File

- Name
- Action

3.1.7.3 MAC Parameters

- Sector ID
- Maximum Cell Radius (km)

3.1.7.4 Phy Parameters

- Bandwidth

3.1.7.5 Multi Channel Parameters

- Diversity Mode

The following parameters must be configured for each channel used if Diversity Mode is No Diversity. Otherwise, only Channel 1 needs to be configured:

- Associated ODU
- Downlink (Tx) Frequency (MHz)
- Admin Status: Enable when completing the configuration process

3.1.7.6 Multirate Parameters

- Uplink Basic Rate

- Downlink Basic Rate

3.1.8 SU

3.1.8.1 SW Files in NPU - Default SW File (Advanced Si)

- Name
- Action

3.2 Operation Verification

The following sections describe how to verify the correct functioning of the Outdoor Units, Indoor Units, Ethernet connection and data connectivity.

3.2.1 AU-ODU LEDs

To verify the correct operation of the AU-ODU, examine the LED indicators located on the bottom panel of the outdoor unit.

The following tables list the provided LEDs and their associated indications.

NOTE

Verifying the correct operation of the Outdoor Unit using the LEDs, as described below, is only possible after the configuration of basic parameters has been completed.

Table 3-2: AU-ODU-LEDs

Name	Description	Functionality
PWR	Power indication	■ Off - Power failure ■ Green - Power to ODU is OK, internal 3.3 VDC power supply is OK.
ALARM	IDU-ODU communication and synthesizer status indication	■ Off - IDU-ODU communication is OK, synthesizer is locked. ■ Green - IDU-ODU communication failure or synthesizer is not locked
ETH	Not Used	

3.2.2 Base Station LEDs

To verify the correct operation of the Base Station equipment, examine the LED indicators located on the front panels of the modules. The following tables list the LEDs of the Base Station modules and their associated indications.

Table 3-3: AU-IDU LEDs

Name	Description	Functionality
PWR	Power indication	■ Off - AU-IDU is not powered ■ Red - AU-IDU power supply failed (low power) ■ Green - AU-IDU power is OK
ALARM	Alarm indication	■ Off - AU-IDU is OK ■ Red - AU-IDU failure
WLINK	Wireless link status indication	■ Off - No SU is associated ■ Green - At least one SU is associated
WACT	IDU transmission indication	■ Off - No IDU transmission ■ Green - IDU transmission OK
SP	Spare	Not Used
IP	IP activity indication	■ Off - No downlink (AU to SU) IP activity ■ Green (blinking) - Downlink (AU to SU) IP activity
ODU1 - ODU4 PWR	IDU to ODU Power Indication	■ Off - No IDU to ODU power output ■ Red - IDU to ODU power output failed ■ Green - IDU to ODU power output OK
ODU1 - ODU4 ALRM	IDU-ODU communication status	■ Off - IDU-ODU communication OK ■ Red - IDU-ODU communication failure
HOT SWAP	IDU readiness for hot swap removal	■ Off: Power to the module is not disconnected, the AU-IDU is not ready for removal ■ Blue: Power to the module can be disconnected and the AU-IDU can be safely removed For instructions on using the HOT SWAP handles refer to Section 2.2.9.

Table 3-4: NPU LEDs

Name	Description	Functionality
PWR	Power indication	■ Off - NPU is not powered ■ Red - NPU power failure ■ Green - NPU power is ok
ALRM	NPU Alarm indication	■ Off - NPU is OK ■ Red - NPU failure
BST ALRM	Base Station chassis alarm indication	■ Off - All Base Station modules are OK ■ Red - Failure in one (or more) Base Station modules
EXT ALRM	External alarm indication	■ Off - No alarm received via the AL IN connector ■ Red - Alarm received via the AL IN connector
MASTER	Master/Slave (primary/secondary) operation indication	■ Off - Secondary NPU (backup) ■ Green - Primary NPU
GPS/SYNC	GPS/IF clock synchronization functionality indication	■ Off - GPS/IF clock synchronization is disabled ■ Green - GPS/IF clock synchronization is enabled
HOT SWAP	NPU readiness for hot-swap removal	■ Off: Power to the module is not disconnected, the NPU is not ready for removal ■ Blue: Power to the module can be disconnected and the NPU can be safely removed For instructions on using the HOT SWAP handles refer to Section 2.2.9.

Table 3-5: PIU LEDs

LED Status		Description
PWR	**MASTER**	
Off	Off	Chassis is not connected to power
Red	Off	Power is not connected or power input is out of range or PIU card is damaged. Chassis is powered by the redundant PIU
Red	Green	Power input is out of range or PIU card damaged. Chassis is powered by the PIU
Green	Off	Power to PIU is OK. PIU is in redundant mode and the chassis is powered from the other PIU
Green	Green	Power to PIU is OK. The chassis is powered from the PIU
HOT SWAP		Off: Power from the module to the chassis is not disconnected, the PIU is not ready for removal Blue: Power from the module to the chassis can be disconnected and the PIU can be safely removed For instructions on using the HOT SWAP handles refer to Section 2.2.9.

Table 3-6: PSU LEDs

LED Status		Description
PWR	**ALRM**	
Off	Off	No power or fatal damage
Off	Red	Power input is out of range or PSU is damaged or PSU is inhibited by NPU
Green	Off	Power is OK and PSU operates properly.

Table 3-7: AVU LEDs

LED Status		Description
PWR	**ALRM**	
Off	Off	No 5V power input
Red	Red	12V power failed
Green	Red	One or more fans have failed
Green	Off	AVU operates properly

3.2.3 ODU Power Feeder LEDs

To verify the correct operation of the ODU Power Feeder, examine the LED indicators located on the front panel of the unit. The following table lists the LEDs of the ODU Power Feeder and their associated indications.

Table 3-8: ODU Power Feeder LEDs

Name	Description	Functionality
PWR	Input power indication	■ Off - ODU Power Feeder is not powered ■ Green - ODU Power Feeder power is OK
ODU PWR 1 - 4	Output power indications	■ Off - AU-ODU-HP is not connected ■ Red - Power output problem (short or overload) ■ Green - AU-ODU-HP is connected and powered

3.2.4 GPS Adapter LEDs

To verify the correct operation of the GPS Adapter, examine the LED indicators located on the front panel of the unit. The following table lists the LEDs of the GPS Adapter and their associated indications.

Table 3-9: GPS Adapter LEDs

Name	Description	Functionality
PWR	Input power indication	■ Off - Power input failure ■ Green - 12 VDC power supply from NPU is OK
1PPS	1PPS signal indication	■ Blinking Green - 1PPS signal from GPS Receiver is detected ■ Red - 11PPS signal is not detected
Active GPS - ODU	ODU GPS selection indication	■ Green - indicates that the selected GPS Receiver: is ODU (Outdoor) ■ Off - ODU GPS Receiver is not selected
Active GPS - IDU	IDU GPS selection indication	■ Green - indicates that the selected GPS Receiver: is IDU (Indoor) ■ Off - IDU GPS Receiver is not selected

Table 3-9: GPS Adapter LEDs

Name	Description	Functionality
Active GPS - INT	INT GPS selection indication	■ Green - indicates that the selected GPS Receiver: is INT (Internal). Internal is not supported in current release. ■ Off - INT GPS Receiver is not selected
INT CLOCK	Internal clock source indication	■ Green - Internal 16MHz clock is ok (not supported in current release) ■ Red - Internal clock is not available or clock failure

3.2.5 Verifying the Ethernet Connection

After connecting the unit to an Ethernet outlet, verify that the Ethernet Integrity Indicator, which is the yellow LED embedded in the DATA port connector, is on. This indicates that the unit is connected to an Ethernet segment. The Ethernet Activity Indicator, which is the green embedded LED, should blink whenever the unit receives or transmits traffic on the DATA port.

4

Chapter 4 - Operation and Administration

In This Chapter:

- “BreezeMAX System Management” on page 78
- “The Monitor Program” on page 80
- “The NPU's Main Menu” on page 84
- “Base Station Menu” on page 86
- “NPU Menu” on page 107
- “Radio Cluster Menu” on page 124
- “ODU Menu” on page 127
- “AU Menu” on page 132
- “SU Menu” on page 150
- “Services Menu” on page 173
- “NPU Parameters Summary” on page 216

4.1 BreezeMAX System Management

All BreezeMAX system components associated with a Base Station are managed via the Base Station's NPU module. The other system components (AUs and SUs) are not accessed directly: each configuration change or status enquiry is sent to the NPU that communicates with other system components.

NOTE

The SU can also be managed directly from its Ethernet port using the Installer Monitor program or the built-in Web Server. These options are available to support the installation process and enable special tests and performance monitoring at the SU's site.

The following management options are available:

- SNMP based management using AlvariSTAR (or another network management system customized to support management of BreezeMAX).
- Using Telnet to access the embedded Monitor application.
- Accessing the embedded Monitor application locally via the MON port.

NOTE

It is not possible to manage the Base Station via the wireless link (from the SU's side).

Two management access methods are available to support management using SNMP and/or Telnet:

- Out-Of-Band (OOB) management via the dedicated MGMT port.
- In-Band (IB) management via the DATA port.

NOTE

To enable remote management of devices behind the SU, including Voice and Networking Gateways, IP connecctivity with the managed device is needed. This is possible only via the Data port.

Typically, BreezeMAX systems will be managed using AlvariSTAR or another SNMP based network management system.

This chapter describes how to manage the system using the Monitor application. For information on managing the system using AlvariSTAR refer to the Applicable AlvariSTAR documentation.

NOTE

To enable remote management (using SNMP and/or Telnet), the parameters of the applicable port (MGMT and/or DATA) must first be configured via the MON port. For details on the applicable parameters refer to Section 4.5.3.1 (Management Port) and Section 4.5.3.2 (Data Port).

4.2 The Monitor Program

4.2.1 Accessing the Monitor Program

To access the Monitor program via the MON connector:

1. Use the Monitor cable to connect the MON connector of the NPU to the COM port of your ASCII ANSI terminal or PC. The COM port connector on the Monitor cable is a 9 pin D type plug.
2. Run a terminal emulation program, such as HyperTerminal™.
3. Set the communication parameters as shown in the following table:

Table 4-1: COM Port Configuration

Parameter	Value
Baud Rate	9600
Data Bits	8
Stop Bits	1
Parity	None
Flow Control	Xon/Xoff
Port	Connected COM port

4. The password prompt is displayed. Enter the password and press the Enter key to get to the Main menu.

NOTE

There are 3 access levels, as described in Section 4.2.2. The default password for each of the access levels is:

Access Level	Default Password
Administrator	admin
Installer	installer
Monitor	monitor

To access the Monitor program using Telnet:

1. The PC used for accessing the Monitor program should be configured according to the parameters configured for the applicable port (MGMT or DATA port).
2. If you connect directly to the MGMT or DATA port, use a crossed Ethernet cable.
3. Run the Telnet program connecting to the IP address of the connected port.
4. The Enter the password message is displayed. Enter the password and press the Enter key to get to the Main menu.

NOTE

Following three unsuccessful login attempts (using incorrect passwords), the monitor program is blocked for 10 minutes.

If you forgot the Installer or Monitor password, the Administrator can login (with the Administrator password) and define a new password for Installer and/or Monitor access level.

If you forgot the Administrator password, type "help" to receive a challenge string consisting of 24 characters. Contact Alvarion's Customer Service and provide the challenge string (after user identification) to receive a temporary password. You can use this password only once to enter the program. The password must be changed during the session to a different "permanent" password. The administrator should be notified of this new password. Five consecutive errors in entering the temporary password will invalidate it. In this case, repeat this procedure to receive a new challenge string for a new temporary password.

4.2.2 Using the Monitor Program

This section describes the Monitor program structure and navigation rules.

- There are three access levels to the Monitor program. The available actions depend on the access level (password) used for accessing the program:
  - **Administrator**: Read/Write permissions for all parameters. The default password is admin.
  - **Installer**: Read-only permission for the Services menu, Read/Write permissions for all other options excluding the Change Password option. The default password is installer.
  - **Monitor**: Read-only permissions for all parameters. The default password is monitor.

- Each menu or submenu specifies the unit type (BreezeMAX/NPU), the IP address of the port used for accessing the Monitor program (when using the MON port, there is no IP address), the running SW version and a description of the menu.

- Each menu or submenu displays a list of numbered options. To access an option, enter the number of the required option at the > prompt and press the Enter key.

- At any point in the program, you can use the **Esc** key to return to the previous menu (one level up) without applying any change.

- The first selectable item in most menus is the Show option, enabling to view the current configuration of the applicable parameters. For some menus some additional status information is displayed.

For certain parameters, an updated value is applied only after reset or after entering a specific command. In these parameters, the configured value may differ from the actual value. If the configured value differs from the actual value both values will be displayed, where the first one is the configured value and the second is the actual value. For example: "Bandwidth (MHz): 1.75, 3.5" means that the configured bandwidth, to be applied after the next reset, is 1.75 MHz, and the current actual bandwidth is 3.5 MHz.

For certain parameters the actual values may not be available (such as when pre-configuring an AU that is not yet installed). For these parameters a value of NA (Not Available) will be displayed.

- The Update/Add options will display all applicable parameters line by line, allowing to conveniently edit all of them. The current value is displayed for each parameter. To keep the current value - press Enter. To change it - enter a new value and press Enter.

- Press the Tab key for context sensitive help text (where applicable).

- If an erroneous value was entered - the reason of the error or help text will be displayed, and the parameter entry text will be displayed again.

- Many menus include a Select By option, enabling to get a sub-menu for a selected entity according to the selection criteria.

- If the Monitor program is not used for 10 minutes, the session will be automatically terminated.

- Select the Exit option in the Main menu to exit the program and terminate the session.

4.3 The NPU's Main Menu

The Main menu of the NPU Monitor program includes the following options:

1 - Base Station

2 - NPU

3 - Radio Cluster

4 - ODU

5 - AU

6 - SU

7 - Services

X - Exit

4.3.1 Base Station Menu

The Base Station menu enables to view general base station status information, to configure general base station parameters, and to view active alarms or traps log. For details refer to Section 4.4.

4.3.2 NPU Menu

The NPU menu enables configuring the NPU's DATA and MGMT ports, defining authorized managers, managing the NPU's SW versions and viewing current status and configurations. For details refer to Section 4.5.

4.3.3 Radio Cluster Menu

The Radio Cluster menu enables viewing the details of existing Radio Clusters, defining new Radio Clusters, updating the parameters of an existing Radio Cluster and deleting a Radio Cluster from the database.

For details refer to Section 4.6.

4.3.4 ODU Menu

The ODU menu enables viewing the status and configuration details of existing ODUs, configuring the parameters of new ODUs including pre-configuration of ODUs that are not yet installed, updating the parameters of existing ODUs and deleting ODUs from the database.

For details refer to Section 4.7.

4.3.5 AU Menu

The AU menu enables configuring the parameters of selected AUs, including pre-configuration of AUs that are not yet installed. It also enables managing AUs SW versions and viewing current status, configurations and performance information. For details refer to Section 4.8.

4.3.6 SU Menu

The SU menu enables viewing summary information of all relevant SUs, configuring the parameters of a selected SU and defining new SUs. It also enables managing a selected SU's SW versions and viewing its current status, configuration and performance information.

For details refer to Section 4.9.

4.3.7 Services Menu

The Service menu enables viewing, updating and adding service profiles and subscribers, and allocating services to subscribers. It also enables viewing and updating filtering rules and the MAC Address Deny List.

For details refer to Section 4.10.

4.3.8 Exit

Select the Exit option (X) to exit the Monitor program and terminate the Telnet session.

4.4 Base Station Menu

The Base Station menu includes the following options:

- Show
- Configuration
- Alarms and Traps
- RADIUS
- Licenses
- Chain
- GPS Info

4.4.1 Show

Select this option to view the current value/selected option of configurable parameters. Refer to Section 4.4.2 for more details on these parameters. In addition, some general status information is displayed, as follows:

- Configurable Parameters:
  - Device Name
  - Device Location
  - ATPC Status
  - Optimal Uplink RSSI (dBm)
  - Operator ID
  - Cell ID
- Status Information:
  - Slots status, displaying for each slot (1-9) the following:
    - Installed module type (or "Not Installed" for an empty slot)

- Operational status (OK/Fault) of an installed module
- Operational status (OK/Fault) of the AVU module
- PIU slots status, displaying for each PIU slot:
  - Mode: Master, Redundant or Not Installed
  - Operational status (OK/Fault) of an installed module
- PSU slots table, displaying the status of each slot: Not installed, OK or Fault.

■ Licenses Status

- CPEs License Bank status
- Base Station License Status

For details refer to Section 4.4.5.

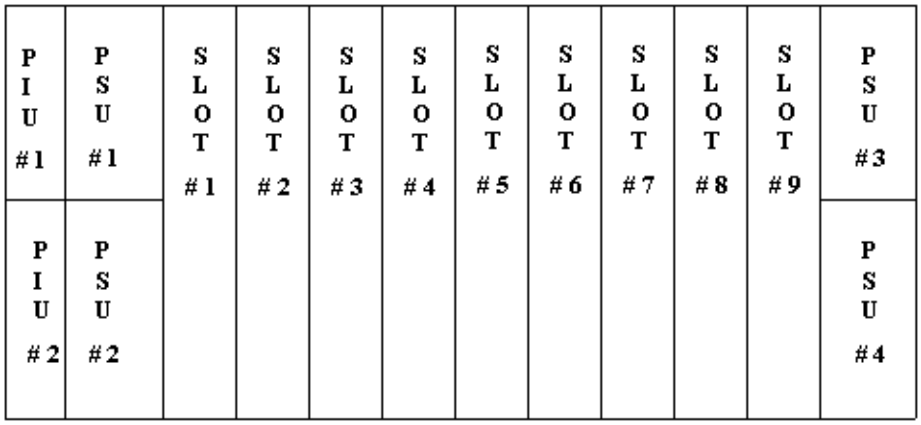

Figure 4-1: Base Station Chassis Slot Assignment

4.4.2 Configuration

Select this option to view or configure the general Base Station parameters:

4.4.2.1 Device Name

The Device Name parameter provides identification information for the Base Station equipment.

The device name consists of up to 255 printable characters.

The default Device Name is a null string (empty).

4.4.2.2 Device Location

The Device Location parameter provides location information for the Base Station equipment.

The location name consists of up to 255 printable characters.

The default Device Location is a null string (empty).

4.4.2.3 ATPC Parameters

BreezeMAX employs an Automatic Transmit Power Control (ATPC) algorithm to dynamically adapt the transmit power of each SU so that it is received by the AU-ODU at an optimal level. The algorithm is managed by the AU and optimal values are calculated separately for each SU based on the actual level at which it is received by the AU-ODU. MAP messages transmitted to the SUs include information on the estimated up/down power level change required to achieve optimal transmit power level.

The ATPC menu enables viewing/updating the following parameters for all AUs:

4.4.2.3.1 ATPC Enable/Disable

The ATPC Enable/Disable parameter controls whether the ATPC algorithm will be used to determine current optimal transmit level for each SU served by the Base Station.

The default is Enable.

NOTE

The ATPC algorithm should always be enabled. The option to disable it is available to support certain tests. After each reset, the Base Station boots with the ATPC enabled, disregarding its status before the device was reset.

4.4.2.3.2 Optimal Uplink RSSI

The Optimal Uplink RSSI sets the target level at which all transmissions should be received by the AU-ODUs for optimal performance.

The range is -103 to -60 (dBm).

The default is -69 dBm.

4.4.2.4 Cell Parameters

The Cell parameters provide a unique identifier for the Base Station, and they are common to all AUs in the Base Station. Updated Cell parameters are applied for each AU after resetting the AU (or after resetting the NPU, which causes reset of all AUs). The Cell menu enables viewing/updating the following parameters:

4.4.2.4.1 Operator ID

A unique identifier of the network. The same Operator ID must be defined for all Base Stations/Micro Base Stations in the network, and it should not be used by any Base Station/Micro Base Station belonging to another network in the same area.

The Operator ID consists of 3 groups of up to three digits each, where the range for each group is 0 to 255.

The default Operator ID is 186.190.0.

Changes in the value configured for the Operator ID are applied only after reset.

4.4.2.4.2 Cell ID

A unique identifier of Base Station. The same Cell ID should not be used by any other Base Station/Micro Base Station belonging to the network.

The Cell ID consists of 2 groups of up to three digits each, where the range for each group is 0 to 255.

The default Cell ID is 0.250.

Changes in the value configured for the Cell ID are applied only after reset.

4.4.2.5 Duplex

The Duplex parameters define the operation mode of the system. These parameters are applied after reset. The Duplex menu enables viewing/updating the following parameters:

4.4.2.5.1 Duplex Mode

The operation mode of the system: TDD or FDD.

NOTE

In systems that support only a single mode of operation, any attempt to change the Duplex Mode to a mode that is not supported will be rejected. If there is a mismatch between the configured value and the mode supported by the AUs, a suitable error message and trap will be sent and the system will not become operational until proper configuration is completed.

The default is TDD.

In the current release only TDD mode is supported, and the Duplex Mode should not be changed.

A change in the configured Duplex Mode is applied only after reset.

4.4.2.5.2 DL-UL Ratio

Applicable only when the Duplex Mode is set to TDD. Defines the ratio of transmit (Down Link) time to receive (Up Link) time, in percents.

The available values are:

1: 65-35

2: 60-40

3: 55-45

4: 50-50

5: 45-55

6: 40-60

7: 35-65

The default is 65-35 (%).

A change in the configured DL-UL Ratio is applied only after reset.

CAUTION

The DL-UL Ratio of all Base Stations in the same coverage area (neighboring cells) must be set to the same value to ensure optimal performance and avoid uplink saturation.

4.4.2.6 Clock

The Clock parameters define the source for the main clocks in the system. These parameters are applied after reset. The Clocks menu enables viewing/updating the following parameters:

4.4.2.6.1 External 1PPS Clock

The 1PPS (Pulse Per Second) clock is used to determine the air-frame start time. Assuming that all systems use the same air-frame size and DL/UL Ratio, then, when the 1PPS clock is received from a GPS system, this mechanism ensures inter-site and intra-site synchronization among all sectors, preventing cross interference and saturation problems. When using the internal 1PPS clock (derived from the selected 16 MHz clock source), only intra-site synchronization among sectors can be achieved.

The available options are Enable (use external 1PPS clock source) and Disable (use internal 1PPS clock source derived from the selected 16 MHz clock).

The default is Enable.

4.4.2.6.2 External 16 MHz Clock

The 16 MHz clock source is used for generation of all main clocking signals in the system, including the internal 1PPS clock. Using an external, accurate 16 MHz clock source will enable better hold-over of the 1PPS clock upon temporary loss (or reduced reliability when receiving less than 4 satellites) of the external 1PPS clock. This will allow a longer time of continued operation before appearance of interferences due to clock drifts among Base Stations.

The available options are Enable (use external 16 MHz clock source) and Disable (use internal 16 MHz clock source).

The default is Disable

In the current release, external 16 MHz clock from the GPS Adapter is not available.

4.4.3 Alarms and Traps

The Alarms and Traps menu enables viewing the active alarms or the traps log, filtering the displayed traps and enabling/disabling traps. The available options are:

- Show Active Alarms
- Traps Display Filter
- Show Traps Log
- Trap Configuration

4.4.3.1 Show Active Alarms

Select to view the currently active alarms. For more details on active alarms refer to the Traps and Alarms document.

4.4.3.2 Traps Display Filter

Select to view/update the filtering criteria for the Traps Log display. The configurable filtering criteria are:

4.4.3.2.1 Minimum Severity

The Minimum Severity parameter enables defining the minimum severity filter. Traps whose severity is below the defined severity will not be displayed.

The options are Critical, Major, Minor, Warning and Info.

The default is Info severity, which means that all the traps in the log will be displayed.

4.4.3.2.2 Days

The Days parameter enables defining the period for which traps will be displayed.

The available options are from 1 to 31 days. Only traps that occurred within the last N days, where N is the value selected for this parameter, will be displayed.

The default is 31 days.

4.4.3.3 Show Traps Log

Select to view the traps log. The traps will be displayed based on the filtering criteria defined by the Minimum Severity and Days parameters in the Traps Display Filtering option, up to a maximum of the last 1000 traps. For more details refer to the Traps and Alarms document.

4.4.3.4 Trap Configuration

The Trap Configuration menu enables viewing current parameters of all traps and updating the parameters of a selected trap. It also enables viewing traps with modified parameters (different from the default) and restoring the configuration of all modified traps to their default values.

The available options are:

- Show Trap Status
- Admin Status
- Severity
- Suppression Interval

4.4.3.4.1 Show Traps Status

Select this option to view a list of all traps and their parameters. For each trap, the following details are displayed:

- Trap ID
- Name
- Admin Status (the default Admin Status for all traps is Enabled)

- Default Severity
- Current Severity
- Suppression Interval (in seconds. The default Suppression Interval is 0, which means no suppression).

4.4.3.4.2 Admin Status

The Admin Status menu enables viewing a list of all traps with Admin Status Disabled, updating the Admin Status of a selected trap and restoring the Admin Status of all traps to the default Enabled status. The Admin Status menu includes the following options:

- **Show Disabled Traps List**: Displays all traps with Admin Status Disabled (the default Admin Status for all traps is Enabled).
- **Update**: Enables modifying the Admin Status of a selected trap.
- **Restore Defaults**: Enables restoring the Admin Status of all traps to Enable.

4.4.3.4.3 Severity

The Severity menu enables viewing a list of all traps with Severity that differs from the default severity, updating the Severity of a selected trap and restoring the Severities of all traps to the default severities. The Severity menu includes the following options:

- **Show Traps with Modified Severity**: Displays all traps with Severity that differs from the default severity.
- **Update**: Enables modifying the Severity of a selected trap.
- **Restore Defaults**: Enables restoring the Severities of all traps to the default severities.

4.4.3.4.4 Suppression Interval

The Suppression Interval is the minimum time between consecutive transmissions of the same trap. This parameter can be used to prevent excessive retransmissions of the same trap. The Suppression Interval menu enables viewing a list of all traps with Suppression Interval that differs from the default suppression interval, updating the Suppression Interval of a selected trap and

restoring the Suppression Intervals of all traps to the default value of 0 (no suppression).

The Severity menu includes the following options:

- **Show Traps with Modified Suppression Interval**: Displays all traps with Suppression Interval that differs from the default suppression interval, which is 0 (no suppression).
- **Update**: Enables modifying the Suppression Interval of a selected trap. The available range is from 0 to 86,400 (seconds). 0 means no suppression.
- **Restore Defaults**: Enables restoring the Suppression Intervals of all traps to the default value (0).

4.4.4 RADIUS

Managing a large number of users creates the need for significant administrative support together with careful attention to security, authorization and accounting. The use of RADIUS (Remote Authentication Dial In User Service) enables operators to manage a single database of users, supporting authentication (verifying user name and password) as well as configuration information detailing the type of service to deliver to the user and the traffic that the user transmitted and received, for billing proposes.

RADIUS is a protocol for carrying authentication, authorization, and configuration information between a Network Access Server (NAS), which desires to authenticate its links, and a shared Authentication server. A Network Access Server operates as a client of RADIUS. The client is responsible for passing user information to designated RADIUS server(s(, and then acting on the response. RADIUS servers are responsible for receiving user connection requests, authenticating the user, and then returning all configuration information necessary for the client to deliver service to the user.

In BreezeMAX systems, a RADIUS NAS is implemented in each Base Station. Transactions between the client and RADIUS server are authenticated using Password Authentication Protocol (PAP) through encryption based on RSA Message Digest Algorithm MD5 and a Shared Secret, which is never sent over the network.

The Access-Request is submitted to the RADIUS server via the network. If no response is returned within a length of time, the request is re-sent a number of times. Once the RADIUS server receives the request, it validates the sending client. A request from a client for which the RADIUS server does not have a shared

secret must be silently discarded. If the client is valid, the RADIUS server consults a database of users to find the user whose User Name matches the request. The user entry in the database contains the User Password that must be verified.

A RADIUS server can be used for authentication purposes only, for accounting purposes only, or for both authentication and accounting purposes. Up to two servers of each type can be defined. Each server of each type (Authentication/accounting) can be defined as either Primary or Secondary. Only one server of each type can be defined as Primary. However, both servers of the same type can be defined as Secondary. If two servers of a certain type are defined, then upon first trial of an authentication/accounting transaction the NPU will attempt to communicate with the Primary server of the relevant type, or with the first Secondary server if no server is defined as Primary (provided the server's Operation Status is Up). If it cannot communicate with this server, it will attempt communicating with the other server. Upon succeeding to communicate with a certain server, this server is defined as Active (and the other one as Standby). As long as the NPU succeeds to communicate with an Active Authentication/Accounting server, it will continue using it for authentication/accounting transactions.

The RADIUS menu includes three sub-menus:

- **General Parameters**
- **Authentication**
- **Accounting**

4.4.4.1 General Parameters

The General Parameters menu enables viewing and modifying parameters that affect the communication with all RADIUS servers. These parameters include:

- **Shared Secret**
- **Retry Interval (sec)**
- **Maximum Number of Retries**
- **Keep Alive Timeout (sec)**

4.4.4.1.1 Shared Secret

Shared Secret is the key used for encrypting the User name and Password transmitted to the RADIUS server(s).

For security and control reasons, the Shared Secret option is available only for users with Administration access rights, using the Administrator Password to access the program. The Shared Secret cannot be changed using SNMP. For the same security reasons, the Shared Secret is displayed as a series of asterisks, and when defining it for the first time or updating it, the user is prompted to re-enter the new Shared Secret for confirmation.

NOTE

For security reasons, the Shared Secret does not change after performing the Set Factory Defaults operation. For the same reason, the Shared Secret is not included in backup configuration files.

Valid Shared Secret: Up to 16 printable characters, case sensitive.

The default Shared Secret is null (Shared Secret must be defined).

4.4.4.1.2 Retry Interval (sec)

The Retry Interval parameter defines the time in seconds to wait before retransmitting a RADIUS message if no response is received.

The range is 1-5 (seconds).

The default value is 5 (seconds).

4.4.4.1.3 Maximum Number of Retries

The Maximum Number of Retries parameter defines the maximum number of retransmission attempts, before a decision is taken to revert to another server if configured, or give up.

The range is 0-5 (retries).

The default value is 3 (retries).

4.4.4.1.4 Keep Alive Timeout (sec)

The NPU maintains a keep alive mechanism with all defined servers. The Keep Alive Timeout defines the time in seconds to wait before reaching a decision that a certain server is no longer available.

The range is 60-180 (seconds).

The default value is 60 (seconds).

4.4.4.2 Authentication

The Authentication menu enables viewing the status and parameters of defined Authentication servers, adding a new server (up to a maximum of two), or deleting a server from the database. The parameters of an existing server cannot be updated: to modify the parameters of a server, it must first be deleted and then defined again through the Add Server option.

The Authentication menu includes the following options:

- **Show All**
- **Add Server**
- **Select Server**

4.4.4.2.1 Show All

Select this option to view the current status and parameters of all defined Authentication servers. For each defined Authentication server the following details are displayed:

- **IP Address**
- **UDP Port**
- **Server Status**: Primary or Secondary
- **Operation Status**: Up or Down (according to the keep alive mechanism)
- **Activity Status**: Active or Standby (indicates whether this is the server currently in use for authentication purposes)

4.4.4.2.2 Add Server

Select this option to define a new Authentication server. Up to two Authentication servers can be defined. You will be prompted to configure the following parameters:

4.4.4.2.2.1 IP Address

The IP address of the Authentication server.

The default is null (IP address must be defined)

4.4.4.2.2.2 UDP Port

Specifies the UDP port number used by the RADIUS server for authentication transactions.

Valid values: 1 to 65535.

The default value is 1812 (RFC 2865 requirement).

4.4.4.2.2.3 Server Status

Defines whether this server is Primary or Secondary. Each Authentication server can be defined as either Primary or Secondary. Only one Authentication server can be defined as Primary. However, both servers can be defined as Secondary.

4.4.4.2.3 Select Server

This option enables selecting an existing Authentication for viewing its status and parameters, deleting it from the database or viewing its Statistics counters. The selection is based on the server's IP address.

The available options are:

- **Show**: Displays current status and parameters. For information on displayed details refer to Section 4.4.4.2.1),
- **Delete**: To delete the server from the database
- **Statistics**: To display or reset the Statistics Counters for this server. The Statistics Counters display traffic information according to the standard RFC 2618 "RADIUS Authentication Client MIB”, as follows:
  - **Round Trip Time**: The time interval (in hundredths of a second) between the most recent Access-Reply/Access-Challenge and the Access-Request that matched it from this server.
  - **Access Requests**: The number of RADIUS Access-Request packets sent to this server. This does not include retransmissions.
  - **Access Retransmissions**: The number of RADIUS Access-Request packets retransmitted to this server.
  - **Access Accepts**: The number of RADIUS Access-Accept packets (valid or invalid) received from this server.
  - **Access Rejects**: The number of RADIUS Access-Reject packets (valid or invalid) received from this server.

- **Access Challenges**: The number of RADIUS Access-Challenge packets (valid or invalid) received from this server.
- **Malformed Access Responses**: The number of malformed RADIUS Access-Response (Access-Accept, Access-Challenge or Access-Reject) packets received from this server. Malformed packets include packets with an invalid length. Bad authenticators or Signature attributes or unknown types are not included.
- **Bad Authenticators**: The number of RADIUS Access-Response packets containing invalid authenticators or Signature attributes received from this server.
- **Pending Requests**: The number of RADIUS Access-Request packets destined for this server that have not yet timed out or received a response. This counter is incremented when an Access-Request is sent and decremented due to receipt of an Access-Accept, Access-Reject or Access-Challenge, a timeout or retransmission.
- **Timeouts**: The number of authentication timeouts to this server. After a timeout the client may retry to the same server, send to a different server, or give up. A retry to the same server is counted as a retransmit as well as a timeout. A send to a different server is counted as a Request as well as a timeout.
- **Unknown Types**: The number of RADIUS packets of unknown type which were received from this server on the authentication port.
- **Packets Dropped**: The number of RADIUS packets of which were received from this server on the authentication port and dropped for any reason.

4.4.4.3 Accounting

The Accounting menu enables viewing the status and parameters of defined Accounting servers, adding a new server (up to a maximum of two), or deleting a server from the database. The parameters of an existing server cannot be updated: to modify the parameters of a server, it must first be deleted and then defined again through the Add Server option.

The Accounting menu includes the following options:

- **Show All**
- **Add Server**
- **Select Server**

4.4.4.3.1 Show All

Select this option to view the current status and parameters of all defined Accounting servers. For each defined Accounting server the following details are displayed:

- **IP Address**
- **UDP Port**
- **Server Status**: Primary or Secondary
- **Operation Status**: Up or Down (according to the keep alive mechanism)
- **Activity Status**: Active or Standby (indicates whether this is the server currently in use for accounting purposes)

4.4.4.3.2 Add Server

Select this option to define a new Accounting server. Up to two Accounting servers can be defined. You will be prompted to configure the following parameters:

4.4.4.3.2.1 IP Address

The IP address of the Accounting server.

The default is null (IP address must be defined)

4.4.4.3.2.2 UDP Port

Specifies the UDP port number used by the RADIUS server for accounting transactions.

Valid values: 1 to 65535.

The default value is 1813 (RFC 2866 requirement).

4.4.4.3.2.3 Server Status

Defines whether this server is Primary or Secondary. Each Accounting server can be defined as either Primary or Secondary. Only one Accounting server can be defined as Primary. However, both servers can be defined as Secondary.

4.4.4.3.3 Select Server

This option enables selecting an existing Accounting for viewing its status and parameters, deleting it from the database or viewing its Statistics counters. The selection is based on the server's IP address.

The available options are:

- **Show**: Displays current status and parameters. For information on displayed details refer to Section 4.4.4.3.1),

- **Delete**: To delete the server from the database.

- **Statistics**: To display or reset the Statistics Counters for this server. The Statistics Counters display traffic information according to the standard RFC 2620 "RADIUS Accounting Client MIB", as follows:

  - **Round Trip Time**: The time interval (in hundredths of a second) between the most recent Accounting-Response and the Accounting-Request that matched it from this server.

  - **Requests**: The number of RADIUS Accounting-Request packets sent to this server. This does not include retransmissions.

  - **Retransmissions**: The number of RADIUS Accounting-Request packets retransmitted to this server. Retransmissions include retries where the Identifier and Acct-Delay have been updated, as well as those in which they remain the same.

  - **Response**: The number of RADIUS packets received on the accounting port from this server.

  - **Malformed Responses**: The number of malformed RADIUS Accounting-Response packets received from this server. Malformed packets include packets with an invalid length. Bad authenticators or unknown types are not included.

  - **Bad Authenticators**: The number of RADIUS Accounting-Response packets containing invalid authenticators received from this server.

  - **Pending Requests**: The number of RADIUS Accounting-Request packets sent to this server that have not yet timed out or received a response. This counter is incremented when an Accounting-Request is sent and decremented due to receipt of an Accounting-Response, a timeout or retransmission.

  - **Timeouts**: The number of accounting timeouts to this server. After a timeout the client may retry the same server, send to a different server, or give up. A retry to the same server is counted as a retransmit as well as a timeout. A send to a different server is counted as an Accounting- Request as well as a timeout.

  - **Unknown Types**: The number of RADIUS packets of unknown type which were received from this server on the accounting port.

- **Packets Dropped**: The number of RADIUS packets of which were received from this server on the accounting port and dropped for any reason.

4.4.5 Licenses

The License feature enables managing the license(s) granted to CPEs with limited capabilities ("L model" CPEs) as well as the general Base Station licenses. In an "L model" CPE, the overall throughput (the aggregate downlink and uplink MIR in all services allocated to subscribers behind the CPE) is limited to 2 Mbps. The Network Service Provider may purchase from Alvarion a bank of CPE unlimited bandwidth licenses, and allocate licenses to selected L model CPEs on a need basis (refer to Section 4.9.7.3.9 for details on assigning a license to a selected CPE). Rather than granting licenses only to specific L model CPEs, the Network Service Provider may also purchase a Base Station unlimited bandwidth license to override the bandwidth limitations of all L model CPEs served by the Base Station.

The various licenses (CPEs Unlimited Bandwidth Licenses Bank, Base Station Unlimited Bandwidth License for all CPEs) are supplied as files to be loaded to the Base Station using TFTP. A license file can be loaded only to the Base Station specified in the applicable order.

The Licenses menu enables viewing the current status of CPEs and Base Station Licenses. The available options are:

- Show CPEs License Bank Status
- Show Base Station Licenses
- Show Temporary Grace Licenses
- Show Grace Licenses

4.4.5.1 Show CPEs License Bank Status

Select this option to view the current status of the CPEs Licenses Bank (if available). The displayed information includes:

- **License ID**: The relevant license type. In the current version only a BW (Band-Width) license type is available.
- **License Value**: The specific details of the relevant licenses. In the current version all BW licenses are Unlimited.

- **License Count**: The number of currently available licenses (balance). Each time a license is granted to a specific CPE, the License Count is decremented by one.

4.4.5.2 Show Base Station Licenses

Select this option to view the current Base Station Licenses (if applicable). The displayed information includes the License ID and License Value for each applicable license. Currently, the applicable license that may be available is Unlimited Bandwidth for all CPEs (License ID = BW, License Value = Unlimited).

4.4.5.3 Show Temporary Grace Licenses and Show Grace Licenses

The aggregate uplink and downlink MIR in all the services allocated to an L model CPE should not exceed 2 Mbps. If the aggregate MIR in the services assigned to such a CPE exceeds this limit, the Network Service Provider has a 30 days grace period. During the grace period the assigned services are provided to the CPE. At any time during the 30 days grace period the Network Service Operator can load to the CPE the required permanent license for unlimited bandwidth. If a license was not loaded during this grace period, the following will happen:

- During the first 3 days, defined as a temporary grace period, the Network Service Provider may change the services assigned to the CPE so that the aggregate MIR is no longer above 2 Mbps. The CPE will be removed from the list of Temporary Grace Licenses and will return to its previous status.

- After expiry of the 3 days temporary grace period, the CPE is moved to the Grace Licenses list. After expiry of the full 30 days grace period, the CPE is moved to a list of “Grace Period Expired” CPEs (even if during the grace period the services assigned to them were changed so that the aggregate MIR is no longer above 2 Mbps). A CPE that was moved to the Grace Period Expired list will remain in this list for 3 months. A CPE that is included in this list cannot be cannot be granted another grace period. Any attempt to assign to it a service that will bring the aggregate MIR to a value above 2 Mbps will be rejected.

The Show Temporary Grace Licenses option displays a table that includes the MAC addresses of CPEs that are currently included in the Temporary Grace License list. For each CPE the displayed list includes also the License ID (only BW license is applicable in the current version) and the expiry date of the temporary grace period.

The Show Grace Licenses option displays a table that includes the MAC addresses of CPEs that are currently included in the Grace License list. For each CPE the

displayed list includes also the License ID (only BW license is applicable in the current version) and the expiry date of the temporary grace period.

4.4.6 Chain

Future versions of BreezeMAX will enable chaining of co-located Base Stations to fully support intra-site synchronization. When two or more Base Stations are chained, all clocks and additional parameters required to ensure fully synchronized operation of all sectors are sent from the Master Base Station to other Base Stations. The Chain menu includes parameters that must be shared by all Base Stations belonging to the same chain, where most of them should be configured only in the Master Base Station (they will be read-only in other chained Base Stations).

In the current release chaining is not supported yet and all Base Stations are configured as Master Base Stations.

The Chain menu includes the following:

4.4.6.1 Chain Number

In future releases, when chaining will be fully supported, the Chain Number will be used as a unique identifier of a chain. All Base Stations belonging to the same chain should be configured with the same Chain Number. The Chain Number can be used by a central management system to guarantee that certain limitations are met: in each chain, one, and only one Base Station should be defined as Master. Only one Base Station can be defined as Redundant (backup to the Master).

The range is from 1 to 1500.

The default is 0, indicating that a Chain Number is not configured yet. A valid Chain Number must be configured, and this number must be unique in the system to properly support future implementation of chaining.

4.4.6.2 GPS Supported

This is a read-only parameter indicating whether the use of GPS is supported by the Base Station (through the Redundant CPLD in the NPU). The options are Supported or Not Supported.

4.4.6.3 GPS Protocol

The GPS Protocol defines the communication protocol with the GPS receiver.

The available options are None, Trimble (for Outdoor GPS Receiver) and Symmetricom (for Indoor GPS Receiver).

The default is Trimble.

4.4.6.4 Time Zone Offset From UTC

This is the offset of the local time from UTC (Coordinated Universal Time).

The range is from -12:00 up to +13:00 in 30 minutes resolution. The format must be either -XX:YY or +XX:YY where YY is either 00 or 30.

The default is +02:00.

4.4.6.5 Stop Tx After Hold Over Timeout

Upon losing the 1PPS clock from the GPS, or if the received clock is not considered accurate enough because the number of received satellites dropped below the minimum (four satellites), the local 1PPS clock will be generated using the available 16 MHz clock. After a certain time (defined by the Hold Over Passed Timeout parameters described below), it is assumed that due to clock drifts there might be interferences among sectors belonging to the Base Sectors and sectors belonging to neighboring Base Stations). If the Stop Tx After Hold Over Timeout parameter is set to Enable, the Base Station will stop transmitting after this timeout, to prevent interferences to the sectors belonging to other Base Stations. If it is set to Disable, transmissions will continue indefinitely, at the expense of potential interferences to sectors belonging to other Base Stations.

The default is Disable (Hold Over indefinitely).

4.4.6.6 Hold Over Passed Timeout (Min)

This parameter defines the Hold Over timeout, after which there might be interferences to other sectors. When the Stop Tx After Hold Over Timeout is enabled, transmissions will stop after this timeout. When the Stop Tx After Hold Over Timeout is disabled, this timeout is used to generate a trap indicating that there might be interferences to neighboring sectors.

The range is from 0 to 2880 (minutes).

The default is 30 (minutes).

4.4.7 GPS Info

The GPS Info menu displays read-only information received from the GPS receiver (when available). The displayed details include:

- **Number Of Received Satellites**: The number of satellites received by the GPS receiver. For proper operation at least four satellites should be received.

- **Longitude**: The longitude as calculated by the GPS receiver. The format is <xx Deg yy.yyy Min, A>, where xx is the longitude in degrees, yy.yyy is in

minutes (decimal format), and A is either N (North) or S (South). For example, 42 Deg 06.512 Min, N.

- **Latitude**: The latitude as calculated by the GPS receiver. The format is xx Deg yy.yyy Min, B, where xx is the latitude in degrees, yy.yyy is in minutes (decimal format), and B is either E (East) or W (West). For example, 024 Deg 25.290 Min, E.

- **Altitude**: The altitude in meters as calculated by the GPS receiver. For example: 00048,M

- **Calculated Local Date and Time**: The local date and time (using 24 hours clock) as calculated by the GPS receiver, in the format hh;mm;ss dd;mm;yyyy. For example: 13:04:23, 12/07/2006

- **Navigation Processor SW Version**: The number and date of the Navigation Processor SW Version in the format 0xYY 0xZZ dd/mm/yyyy, where XX and YY are the Major and Minor SW Version Numbers in hexadecimal digits, respectively. For example: 0x1A 0x1F 11/3/2005 means that the Major SW Version Number is 1A (hex), the Minor SW Version Number is 1F (hex), and the SW Version release date is 11 March 2005.

- **Signal Processor SW Version**: The number and date of the Signal Processor SW Version in the format 0xYY 0xZZ dd/mm/yyyy, where XX and YY are the Major and Minor SW Version Numbers in hexadecimal digits, respectively. For example: 0x18 0x2B 11/3/2005 means that the Major SW Version Number is 18 (hex), the Minor SW Version Number is 2B (hex), and the SW Version release date is 11 March 2005.

4.5 NPU Menu

The NPU menu includes the following options:

- Show
- Unit Control
- Configuration
- Performance Monitoring

Following is a detailed description of these options.

4.5.1 Show

Select this option to view the current value/selected option of configurable parameters. Refer to Section 4.5.3 for more details on these parameters. In addition, some general status information is shown, as follows:

- General Status Information:
  - Serial Number
  - HW Version
  - HW Configuration Description
  - Redundant CPLD Version (the Redundant CPLD is necessary to enable GPS support)
  - Temperature (Celsius)
  - Cumulative Power On Time (hours): The cumulative power-on time of the NPU since first power-up.
- Management Port Parameters and Status:
  - Management Port MAC Address
  - Management Port IP Address
  - Management Port Subnet Mask
  - Management Port Gateway

- Management Port Dest Subnet
- Management Port Dest Subnet Mask
- Management Port Status (Up/Down)
- Management Port Management Traffic (Enabled/Disabled)

- Data Port Parameters and Status:
  - Data Port MAC Address
  - Data Port IP Address
  - Data Port Subnet Mask
  - Data Port Gateway
  - Data Port Management VLAN
  - Data Port Speed
  - Data Port Status (Up/Down)
  - Data Port Management Traffic (Enabled/Disabled)
- Authorized Managers (per manager) details:
  - IP Address
  - Send Traps
  - Read Community
  - Write Community
- Voice:
  - DRAP TTL Retries
- Bridge Parameters:
  - Bridge Aging Time
- SW Files and Versions:
  - Main SW File
  - Main SW Version

- Shadow SW File
- Shadow SW Version
- Running From: The currently running version (Main or Shadow)
- Boot SW Version
- Frequency Bands File Version

4.5.2 Unit Control

The Unit Control menu of the NPU enables changing the access Passwords and the Monitor Inactivity Timeout, resetting the NPU, reverting the Base Station and the NPU to the factory default configuration, managing the SW versions of the module and creating backup files.

The Unit Control menu includes the following options:

- Change Password
- Reset
- Set Factory Defaults
- SW Versions Control
- Create Backup
- Monitor Inactivity Timeout

4.5.2.1 Change Password

For security and control reasons, the Change Password option is available only for users with Administration access rights, using the Administrator Password to access the program. The Change Password option enables defining the passwords for each of the three different access levels: Administrator, Installer and Monitor. After changing the password for a selected access level, you will be prompted to re-enter the new password for confirmation.

NOTE

For security reasons, the passwords do not change after performing the Set Factory Defaults operation. For the same reason, the passwords are not included in backup configuration files.

Valid passwords: Up to 16 printable characters, case sensitive.

The default passwords are:

Table 4-2: Default Passwords

Access Level	Default Password
Administrator	admin
Installer	installer
Monitor	monitor

4.5.2.2 Reset Unit

Select this option to reset the NPU. To avoid unintentional reset, you will be prompted to confirm the reset request. Changes to some of the configurable parameters are applied only after reset.

Refer to Section 4.11 for information on which parameters are changeable in run time and which changes are applied only after reset.

4.5.2.3 Set Factory Defaults

Select this option to set the Base Station and NPU parameters (excluding the access Passwords) to their factory default values. The parameters will revert to their default values after the next reset.

CAUTION

Setting the parameters of the NPU to their default values will disable remote management of the Base Station since this affects the IP and Ethernet parameters and will delete all Authorized Managers.

Refer to Section 4.11 for information on the factory default values of these parameters.

4.5.2.4 SW Version Control

The NPU can contain two SW versions:

- Main: Each time the NPU resets it will reboot using the version defined as Main.
- Shadow: Normally the Shadow version is the backup version. Each time a new SW File is downloaded to the NPU, it will be stored as a Shadow version, replacing the previous Shadow Version.

The typical process of upgrading to a new SW version includes the following steps:

1. Download the new SW File to the NPU. It will be stored as the Shadow version.
2. Reset and run the module from its Shadow version. Note that at this stage, after reset the unit will reboot from its previous Main version.
3. If you want to continue using the new version, swap the Shadow and Main versions. The new version is now defined as Main, and will be used each time the module reboots. The previous version is defined now as Shadow.

Each SW version includes two identifiers:

- SW File, which is the name of the downloaded SW file. This name does not necessarily include clear identification of the SW version number.
- SW Version, which provides unambiguous identification of the SW version.

The SW Version Control submenu includes the following options:

- Show versions
- Run from Shadow
- Set as Main

4.5.2.4.1 Show Versions

Select this option to view the current available versions and the running version:

- Main SW File
- Main SW Version
- Shadow SW File
- Shadow SW Version
- Running From: Main or Shadow
- Boot SW Version
- Frequency Bands File Version

4.5.2.4.2 Run from Shadow

Select the Run from Shadow option to reset the NPU and run the Shadow version after power up. To avoid unintentional actions you will be prompted to confirm the request.

4.5.2.4.3 Set as Main

When the NPU is running the Shadow version (after selecting Reset and Run from Shadow), it will boot from the Main version after the next reset. Select the Set as Main option if you want to swap versions so that the running version will become the Main version and will be the version to be used after reset. To avoid unintentional actions you will be prompted to confirm the request.

4.5.2.5 Create Backup

The Create Backup option enables creating backup files of the Base Station configuration. The backup file contains copies of all the applicable configuration files and databases in the system.

The following backup file types can be created:

- **Full**: The entire Base Station configuration (excluding Passwords and basic IP parameters of the MGMT and DATA ports - IP Address, Subnet Mask and Default Gateway).
- **Profiles**: All the profiles associated with services (Service Profiles, Forwarding Rules, Priority Classifiers, QoS Profiles).
- **Profiles and Services**: All the profiles and configurations associated with service (General Service parameters, Subscribers, Services, Service Profiles, Forwarding Rules, Priority Classifiers, QoS Profiles).
- **Filtering**: All the configurations of Filtering Rules, Interface Filtering and MAC Address Deny List.
- **Traps**: The configuration parameters for all traps.

Upon selecting the backup type option, you will be requested to confirm the request. After confirmation, a message is displayed indicating that the backup file creation is in process. Upon successful completion of the process, a completion message will be displayed.

If a backup file of the same type already exists in the NPU, you will be asked whether to overwrite the existing file. If there was an error in the process of creating a backup file, an error message will be displayed, specifying the reason.

To upload/download the Backup File:

After the backup file has been created, it can be uploaded using a DOS based TFTP Client application to a target directory. To upload the file, use the command:

tftp -i <Port IP address> get <file name> <destination address>.

The default file name is:

- Full: backup.res.
- Profiles: profiles.res
- Profiles and Services: profiles_srvcs.res
- Filtering: filtering.res
- Traps: traps_config.res

The file is encrypted and cannot be edited. However, it can be downloaded to other NPU(s) using a DOS based TFTP Client application with the command: tftp i <Port IP address> put <file name>.

The target NPU will decrypt the backup file, extract all the configuration files and databases and will store them, replacing existing files/databases. The NPU should be reset to apply the downloaded configuration.

NOTE

To avoid loss of connectivity behind a router, the basic IP parameters of the MGMT and DATA ports (IP Address, Subnet Mask, Default Gateway) are not changed when loading a Full backup file to the NPU. The values of these parameters configured in the target NPU before the loading process, are maintained.

4.5.2.6 Monitor Inactivity Timeout

The Monitor Inactivity Timeout parameter determines the amount of inactive time following which the unit automatically exits the Monitor program.

The time out duration can range from 0 to 60 minutes. 0 means no inactivity timeout.

The default value is 10 minutes.

4.5.3 Configuration

The NPU Configuration menu enables viewing and updating parameters that define the functionality of the MGMT and DATA ports, the properties of authorized management stations and bridging functionality. It also enables configuring per Telnet session the types of messages that will be displayed upon occurrence of various events.

The following are the guidelines for configuring these parameters:

- All IP parameters of both ports should be configured. Otherwise, default values shall be used.
- The Destination Subnet parameters of the MGMT port enable defining an additional subnet of stations that can manage the device when connected via a router to the MGMT port. If OOB management via a router connected to the MGMT port is used, the parameters should be configured to ensure different subnets for the Data port, the Management port and the Management Port Destination Subnet.

NOTE

It is highly recommended to use the Management port for local management only. Typically the port should be down (disconnected).

- Authorized Manager(s) must be configured properly to enable remote management using AlvariSTAR (or another SNMP based application).

The Configuration menu includes the following options:

- Management Port
- Data Port
- Authorized Managers
- Bridge
- Voice
- Debug Stream

4.5.3.1 Management Port Parameters

These parameters define the IP parameters for the Management (MGMT) port connecting the base station to the backbone.

NOTE

It is highly recommended to use the Management port for local management only. Typically the port should be down (disconnected).

The Ethernet interface of the Management port in the NPU operates using Auto Negotiation, enabling communication at either 10 Mbps or 100 Mbps, Full Duplex.

4.5.3.1.1 Management Port IP Address

The IP address of the Management port.

The default is 10.0.0.1.

CAUTION

Do not configure the IP Address of the Management port to 0.0.0.0, as this will cause loss of management connectivity via the DATA port.

4.5.3.1.2 Management Port Subnet Mask

The Subnet mask of the Management port.

The default is 255.255.255.0.

NOTE

The local subnet of the Management port (defined by the Management Port IP Address and Management Port Subnet Mask parameters), must differ from the local subnet of the Data port (defined by the Data Port IP Address and Data Port Subnet Mask parameters) and from the subnet that is used as the Static Route for remote management via the Management port (defined by the Management Port Dest Subnet and Management Port Dest Subnet Mask parameters).

4.5.3.1.3 Management Port Gateway

The Gateway IP address of the Management port.

The default is 0.0.0.0.

4.5.3.1.4 Management Port Dest Subnet and Management Port Dest Subnet Mask

The Destination Subnet parameters define a Static Route, which is an IP subnet of stations that can manage the device when connected via a router to the Management port. The Static Route is applicable only when remote management is enabled for both the Management and Data ports (i.e., when both Management

Port Management Traffic Enable/Disable and Data Port Management Traffic Enable/Disable parameters are set to Enable).

The default is 0.0.0.0. for both parameters (meaning no Static Route).

NOTE

The Management Port Gateway, Destination Subnet and Destination Subnet Mask are grouped together. Exiting the configuration process (e.g. by pressing the Esc key) after configuring just the first one or two parameters in this group will discard the changes made.

The subnet that is used as the Static Route for remote management via the Management port (defined by the Management Port Dest Subnet and Management Port Dest Subnet Mask parameters) must differ from the local subnet of the Management port (defined by the Management Port IP Address and Management Port Subnet Mask parameters) and from the local subnet of the Data port (defined by the Data Port IP Address and Data Port Subnet Mask parameters).

4.5.3.1.5 Management Port Management Traffic Enable/Disable

The Management Port Management Traffic Enable/Disable parameter allows enabling/disabling remote management traffic via a router connected to the Management port. This parameter does not affect management traffic via the local subnet defined by the Management Port IP Address and Management Port Subnet Mask.

If remote management for the Management port is disabled, then the unit can be managed by any PC on any of the following subnets (provided the PC is defined as an Authorized Manager):

A The local subnet of the Management port (defined by the Management Port IP Address and Management Port Subnet Mask parameters).

B The local subnet of the Data port (defined by the Data Port IP Address and Data Port Subnet Mask parameters).

C Any subnet reachable via the default Gateway of the Data port (if Data Port Gateway is defined).

If remote management is enabled for both the Data Port and the Management port, then the unit can be managed by any PC on any of the following subnets (provided the PC is defined as an Authorized Manager):

A The local subnet of the Management port (defined by the Management Port IP Address and Management Port Subnet Mask parameters).

B The local subnet of the Data port (defined by the Data Port IP Address and Data Port Subnet Mask parameters).

C Any subnet reachable via the default Gateway of the Data port (if Data Port Gateway is defined).

D The Static Route subnet (defined by the Management Port Dest Subnet and Management Port Dest Subnet Mask parameters) reachable via the Gateway of the Management port.

NOTE

To prevent the undesired situation where remote management traffic is unintentionally disabled in both the Management and Data ports, the Data Port Management Traffic Enable/Disable parameter will be automatically forced to Enabled upon disabling the Management Port Management Traffic, and vice versa.

4.5.3.2 Data Port Parameters

These parameters define the IP and Ethernet parameters for the Data (DATA) port connecting the base station to the backbone.

4.5.3.2.1 Data Port IP Address

The IP address of the Data port.

The default is 1.1.1.3.

4.5.3.2.2 Data Port Subnet Mask

The subnet mask of the Data port.

The default is 255.255.255.0.

NOTE

The local subnet of the Data port (defined by the Data Port IP Address and Data Port Subnet Mask parameters), must differ from the local subnet of the Management port (defined by the Management Port IP Address and Management Port Subnet Mask parameters) and from the subnet that is used as the Static Route for remote management via the Management port (defined by the Management Port Dest Subnet and Management Port Dest Subnet Mask parameters).

4.5.3.2.3 Data Port Gateway

The IP address of the default Gateway for the Data port.

The default is 0.0.0.0.

4.5.3.2.4 Data Port Management VLAN

This parameter defines the VLAN ID for management frames via the Data port. If a value from 0 to 4094 is configured for the Management VLAN ID, then the device will accept management frames only if their VLAN tag is the same as this value.

Available values are 0-4094 or null (empty) for No VLAN.

The default is null (No VLAN).

4.5.3.2.5 Data Port Speed

The speed of the Data port's Ethernet interface that operates always in full duplex mode. Auto negotiation is not supported.

The available options are 100 Mbps and 1 Gbps.

The default speed is 100 Mbps.

4.5.3.2.6 Data Port Management Traffic Enable/Disable

The Data Port Management Traffic Enable/Disable parameter allows enabling/disabling remote management traffic via a router connected to the DATA port. This parameter does not affect management traffic via the local subnet defined by the Data Port IP Address and Data Port Subnet Mask.

If remote management for the Data port is disabled, then the unit can be managed by any PC on any of the following subnets (provided the PC is defined as an Authorized Manager):

A The local subnet of the Management port (defined by the Management Port IP Address and Management Port Subnet Mask parameters).

B The local subnet of the Data port (defined by the Data Port IP Address and Data Port Subnet Mask parameters).

C Any subnet reachable via the Gateway of the Management port (if defined). Note that in this case the Static Route (if defined) is ignored, and the defined Gateway becomes the default Gateway, enabling remote management by any PC reachable via the Gateway.

If remote management is enabled for both the Data Port and the Management port, then the unit can be managed by any PC on any of the following subnets (provided the PC is defined as an Authorized Manager):

A The local subnet of the Management port (defined by the Management Port IP Address and Management Port Subnet Mask parameters).

B The local subnet of the Data port (defined by the Data Port IP Address and Data Port Subnet Mask parameters).

C Any subnet reachable via the default Gateway of the Data port (if Data Port Gateway is defined).

D The remote Static Route subnet (defined by the Management Port Dest Subnet and Management Port Dest Subnet Mask parameters) reachable via the Gateway of the Management port.

NOTE

To prevent the undesired situation where remote management traffic is unintentionally disabled in both the Management and Data ports, the Management Port Management Traffic Enable/Disable parameter will be automatically forced to Enabled upon disabling the Data Port Management Traffic, and vice versa.

4.5.3.3 Authorized Managers

The Authorized Managers submenu enables defining the properties of management stations that are allowed to manage the Base Station using SNMP, including all its components and the SUs associated with it.

NOTE

If no Authorized Manager is defined in the device, it can be managed using SNMP by any station, with the default Read and Write Communities. If at least one Authorized Manager is defined, the device can be managed only by a station whose parameters match a defined Authorized Manager.

The Authorized Manager submenu includes the following options:

4.5.3.3.1 Show All

Select this option to view the details of all currently defined authorized managers.

4.5.3.3.2 Select

This option enables selecting an existing authorized manager for viewing or updating its properties or for deleting it from the database. The selection is based on the authorized manager's IP address. Refer to the following Add section for details on the configurable parameters.

4.5.3.3.3 Add

Select this option to add a new authorized manager. Up to 10 Authorized Manager can be defined. The following parameters can be configured:

4.5.3.3.3.1 IP Address

The IP address of the Authorized Manager.

4.5.3.3.3.2 Send Traps

The Send Traps parameters whether to enable or disable sending of traps to the Authorized Manager.

4.5.3.3.3.3 Read Community

The SNMP Read Community to be used by the Authorized Manager. A null Read Community means that the read (get) operation can only be performed using the Write Community.

Valid Community strings: Up to 23 printable characters, case sensitive.

4.5.3.3.3.4 Write Community

The SNMP Write Community to be used by the Authorized Manager. A null Write Community means that the Authorized Manager has Read only access rights.

Valid Community strings: Up to 23 printable characters, case sensitive.

4.5.3.4 Bridge

The Bridge submenu enables configuring the Bridge Aging Time parameter, setting the aging time for all addresses in the Forwarding Data Base.

The available values are from 1 to 1440 minutes, or 0 for no aging.

The default is 10 minutes.

4.5.3.5 Voice

The Voice submenu enables configuring the **DRAP TTL Retries** parameter. This parameter sets the limit of TTL retries for gateways that support the DRAP protocol before concluding that the gateway is no longer active and removing it from the database. The TTL retry time (the maximum time between two consecutive Allocation Requests) is 255 seconds.

The range is from 1 to 100.

The default is 4.

NOTE

During SW download to a gateway, which may take up to almost 15 minutes under worst conditions, the DRAP protocol is not active. If the gateway is removed from the database before SW download is completed, the download process will fail. During SW download, the DRAP TTL Retries parameter should be set to its default value of 4 (equivalent to 17 minutes).

4.5.3.6 Debug Stream

The Debug Stream submenu enables configuring the types of messages that will be displayed during the Telnet session upon the occurrence of various events. These messages are typically used for investigating various problem situations, and many of them are meaningful only to Alvarion's technicians. The DS Class Enable and DS Class Disable options can be used to enable or disable various classes of messages. The classes of messages that can be controlled include:

- ERR: Error messages that should not occur under regular conditions.
- SYS: Indication of important events and alarms.
- TRAP: Text messages displaying the information supplied by relevant traps.

The default for all classes is Disable.

NOTE

Enabling the display of selected classes is applicable only for the current Telnet session. These parameters affect only the session and are not stored in the device. Upon starting a new session, or after reseting the unit, all classes are disabled.

4.5.4 Performance Monitoring

The Performance Monitoring option enables to view and reset the NPU Ethernet Ports counters. The Performance Monitoring submenu includes the following options:

- Data Port
- Management Port
- All counters

4.5.4.1 Data Port Counters

The Data Port option enables viewing or resetting the Data (DATA) port counters. The information displayed for each counter is the accumulated number since the last time the counters were reset. The counters are reset each time the NPU is reset, or upon activating the Reset Counters option.

The Data Port counters include:

- Data Port Rx Counters
  - Total Packets Received: The total number of packets received on the interface. Packets with errors are not counted.
  - Management Packets Forwarded: The total number of management packets (packets whose destination is the NPU, and broadcasts) received on the Data port and forwarded to the NPU's internal management.
  - Packets Forwarded to Slot 1: The total number of packets received from the Data port and forwarded by the NPU to AU Slot 1.
  - Packets Forwarded to Slot 2: The total number of packets received from the Data port and forwarded by the NPU to AU Slot 2.
  - Packets Forwarded to Slot 3: The total number of packets received from the Data port and forwarded by the NPU to AU Slot 3.

- Packets Forwarded to Slot 4: The total number of packets received from the Data port and forwarded by the NPU to AU Slot 4.
- Packets Forwarded to Slot 7: The total number of packets received from the Data port and forwarded by the NPU to AU Slot 7.
- Packets Forwarded to Slot 8: The total number of packets received from the Data port and forwarded by the NPU to AU Slot 8.
- Packets Forwarded to Slot 9: The total number of packets received from the Data port and forwarded by the NPU to AU Slot 9.
- Packets Discarded on Rx: Packets received from the Data port that were discarded due to switching and classification failures.

Data Port Tx Counters

- Total Packet Transmitted: The total number of packets transmitted to the interface. Packets with errors are not counted.
- Management Packets Submitted: The total number of management packets submitted by the NPU.
- Packets Submitted from Slot 1: The total number of packets received by the NPU from the AU in Slot 1 and submitted to the Data port.
- Packets Submitted from Slot 2: The total number of packets received by the NPU from the AU in Slot 2 and submitted to the Data port.
- Packets Submitted from Slot 3: The total number of packets received by the NPU from the AU in Slot 3 and submitted to the Data port.
- Packets Submitted from Slot 4: The total number of packets received by the NPU from the AU in Slot 4 and submitted to the Data port.
- Packets Submitted from Slot 7: The total number of packets received by the NPU from the AU in Slot 7 and submitted to the Data port.
- Packets Submitted from Slot 8: The total number of packets received by the NPU from the AU in Slot 8 and submitted to the Data port.
- Packets Submitted from Slot 9: The total number of packets received by the NPU from the AU in Slot 9 and submitted to the Data port.
- Packets Discarded on Tx: Always 0. Currently packets are not discarded on Tx.

4.5.4.2 Management Port Counters

The Management Port option enables viewing or resetting the Management (MGMT) port counters. The information displayed for each counter is the accumulated number since the last time the counters were reset. The counters are reset each time the NPU is reset, or upon activating the Reset Counters option.

The Management Port counters include:

- Packets Received
- Packets Discarded on Rx
- Packets Transmitted
- Packets Discarded on Tx

4.5.4.3 All Counters

The All Counters option enables viewing or resetting both the Data (DATA) port and Management (MGMT) port counters.

4.6 Radio Cluster Menu

Radio Cluster is a logical entity used to describe and support management of the Base Station's elements associated with specific geographical sectors. A Radio Cluster represents one or several ODUs that serve (through their directional antennas) the same geographical sector. Up to a maximum of six Radio Clusters can be defined per Base Station, representing a cell coverage using 6 x 60° antennas.

The Radio Cluster(s) must be defined prior to defining the relevant ODU(s), AU(s) and AU Channel(s).

The Radio Cluster menu includes the following options:

- Show Summary
- Select
- Add

4.6.1 Show Summary

Select this option to view the current status of all defined Radio Clusters.

For each defined Radio Cluster, the display includes the following information:

- **ID**: Radio Cluster ID (1-6)
- **Name**: The string that is used as the descriptive name of the Radio Cluster.
- **Location**: The string that is used as the descriptive location of the Radio Cluster.
- **Sector Heading**: The direction (angle from the north) of the geographical sector.
- **Sector Beam Width**: The beam width of the antenna(s) used in the geographical sector.

4.6.2 Select

Use this option and select an already defined Radio Cluster to open the Radio Cluster # menu that will enable managing and configuring the selected Radio Cluster.

The selected Radio Cluster # menu includes the following options:

- **Show**: Select this option to view the current values defined for the selected Radio Cluster's parameters.
- **Update**: Select this option to update one or more of the selected Radio Cluster's parameters. For details on the configurable parameters Refer to Section 4.6.4.
- **Delete**: Select this option to delete the selected Radio Cluster from the database.

4.6.3 Add

Select this option to define a new Radio Cluster.

For details on the configurable parameters refer to Section 4.6.4.

4.6.4 Radio Cluster Parameters

4.6.4.1 Radio Cluster ID

A number used to identify the Radio Cluster. The Radio Cluster ID is configurable only when adding a new Radio Cluster.

The available values range from 1 to 6.

4.6.4.2 Name

A string of up to 32 printable characters used as the descriptive name of the Radio Cluster. This is an optional descriptive parameter.

The default is an empty string.

4.6.4.3 Location

A string of up to 255 printable characters used to describe the location of the Radio Cluster. This is an optional descriptive parameter.

4.6.4.4 Sector Heading

The direction of the geographical sector, defined in degrees from the north. This is an optional descriptive parameter.

The values range is from 0 to 359 (degrees from north).

The default value is 0 (degrees from north).

4.6.4.5 Sector Beam Width

The beam width, in degrees, of the antenna(s) used in the geographical sector. This is an optional descriptive parameter.

The values range is from 0 to 359 (degrees).

The default value is 90 (degrees).

4.7 ODU Menu

The ODU(s) must be defined prior to defining the relevant AU(s) and AU Channel(s).

The ODU menu includes the following options:

- Show Summary
- Select
- Add

4.7.1 Show Summary

Select this option to view the current status of all defined ODUs.

For each defined ODU, the display includes the following information:

- **ID**: ODU ID (1-24)
- **Associated Radio Cluster**: The ID (1-6) defined for the associated Radio Cluster.
- **Tx Power**: The defined Tx Power in dBm units.
- **ODU Configured Band**: The radio band configured for the ODU.
- **Admin Status**: Enabled or Disabled.

For details on the parameters refer to Section 4.7.4.

Upon first power-up of the Base Station, 7 ODUs are defined automatically, with ODU IDs from 1 to 7. The parameters of these automatically created ODUs are:

- Associated Radio Cluster: NA
- Tx Power: 28 dBm
- ODU Configured Band: Not Defined
- Admin Status: Enabled

4.7.2 Select

Use this option and select an already defined ODU to open the ODU # menu that will enable managing and configuring the selected ODU.

The selected ODU # menu includes the following options:

4.7.2.1 Show

Select this option to view the current value/selected option of applicable parameters. In addition, some general status information is displayed, as follows:

- ID
- Associated Radio Cluster
- Tx Power
- ODU Configured Band
- Admin Status
- Oper Status
- HC08 Version
- CPLD Version
- Serial Number
- Temperature (Celsius)
- HW Revision
- HW Configuration Description
- Max Tx Power: The maximum Tx Power supported by the ODU. This read-only parameter sets the upper limit for the Tx Power parameter.

4.7.2.2 Update

Select this option to update one or more of the selected ODU's parameters.

For details on the configurable parameters refer to Section 4.7.4.

4.7.2.3 Delete

Select this option to delete the selected ODU from the database.

4.7.3 Add

Select this option to define a new ODU.

For details on the configurable parameters refer to Section 4.7.4.

4.7.4 ODU Parameters

4.7.4.1 ODU ID

A number used to identify the ODU. The ODU ID is configurable only when adding a new ODU.

The available values range from 1 to 24.

4.7.4.2 Associated Radio Cluster

The ID of the associated Radio Cluster.

The available values range from 1 to 6. The value must be that of an already defined Radio Cluster.

4.7.4.3 Configured ODU Frequency Band

The Configured ODU Frequency Band will be modified through the use of Frequency Bands Configuration file (see Section 4.7.5).

The available values are the list numbers from the displayed list of available Frequency Bands.

The Configured ODU Frequency Band can be updated only if the ODU is not associated with any AU Channel, or if the Admin Status of the associated AU Channel is Disabled.

Compatibility between the Configured ODU Frequency Band and its actual band is verified by the AU upon trying to associate the ODU with a Channel. If the Configured ODU Frequency Band differs from the actual band supported by the ODU, a mismatch trap will be sent by the AU upon trying to associate it with a Channel and the association will be rejected.

4.7.4.4 Tx Power

The Tx Power parameter defines the power level of the transmitted signal at the antenna port of the ODU.

The range is from 13 to 50 dBm using a 0.25 dBm resolution. If the entered value is not compatible with the installed ODU, a trap will be issued. If the entered value is below the minimum supported by the ODU the actual power will be set to the minimum supported by the unit. If the entered value is above the maximum supported by the ODU, the power will be changed to the maximum value supported by the ODU .

The default is 28 dBm.

If the Diversity Mode is set to Fourth Order Diversity, the Tx Power of the ODUs associated with Channels 2-4 will be forced to the value configured for the ODU associated with Channel 1.

If the Diversity Mode is set to Second Order Diversity, the Tx Power of the ODU associated with Channel 2 will be forced to the value configured for the ODU associated with Channel 1. Channels 3 and 4 are not used in Second Order Diversity Mode.

4.7.4.5 Admin Status

The transmit on/off status of the ODU.

The default option is Disabled.

4.7.5 Frequency Bands File and Frequency Bands Groups

The Frequency Bands Configuration file defines the characteristics of each of the frequency bands supported by the system. These characteristics include:

- Lowest Downlink Frequency
- Highest Downlink Frequency
- Step (resolution)
- Duplex Separation: the difference between downlink (Tx) and uplink (Rx) frequencies. In systems operating in TDD mode the Duplex Separation is 0.
- Group ID: In certain cases, an AU can be connected to ODUs using different Frequency Bands. The Group ID defines the Frequency Bands Group, which includes all the Frequency Bands that can be used by the same AU. An AU cannot be associated with two or more ODUs that use Frequency Bands belonging to different Groups.

In the current release, the following Frequency Bands are supported:

Table 4-3: Frequency Bands

Frequency Band (ID)	Group (ID)	Downlink Frequency Range	Resolution	Duplex Separation
2.3 (12)	2.3GHz (5)	2300-2360 MHz	125 KHz	0
2.5A1 (13)	2.5GHz (6)	2496-2602 MHz	125 KHz	0
2.5A2 (14)	2.5GHz (6)	2590-2690 MHz	125 KHz	0
3.4a TDD (15)	3.5GHz TDD (7)	3399.5-3455 MHz	125 KHz	0
3.4b TDD (16)	3.5GHz TDD (7)	3445-3500 MHz	125 KHz	0
3.5a TDD (17)	3.5GHz TDD (7)	3500-3555 MHz	125 KHz	0
3.5b TDD (17)	3.5GHz TDD (7)	3545-3600 MHz	125 KHz	0

Note that the Frequency Bands File includes additional Frequency Bands for systems that support FDD Duplex Mode and are not applicable to the current release.

This mechanism allows adding new frequency bands without modifying the software by simply loading a new Frequency Bands File when the supporting hardware becomes available. The file will be either a part of the NPU's software or loaded later to the NPU, using an updated file obtained from Alvarion. The version of the current file and information on the supported bands is available in the NPU's Show menu.

4.8 AU Menu

The AU menu includes the following options:

- Show Summary
- SW Files in NPU
- Select

Following is a detailed description of these options.

4.8.1 Show Summary

Select this option to view the current status of all AUs.

For each applicable slot (1-4, 7-9), the display includes the following information:

- AU Slot ID
- Status: Installed/Not Installed
- Fault Status
- Configured SW File Name: The name of the AU SW File that should be used to upgrade an AU after being installed as well as after each reset. Should be either None (an empty string) or one of the AU SW Files available in the NPU. This is the SW File defined in the SW Versions Control of the AU (see Section 4.8.5.2.3).
- Configured SW Version: The SW Version of the Configured SW File described above.
- Configured Operation: The operation to be performed with the Configured SW File when the AU is installed, as well as after each reset: None (do not load), Load (load to Shadow), Run from Shadow or Set as Main. This is the Action defined in SW Versions Control menu of the AU (see Section 4.8.5.2.3).
- SW Download Status: The status of the last SW download operation (or None).
- Configured SU SW File Name: The name of the SU software file that should be used to upgrade an SU upon network entry for all SUs in this sector. (Not

applicable to any SU whose Configured SW File Name is other than None). Should be either one of the SU SW Files available in the NPU or an empty string for None.

- Configured SU SW Version: The SW Version of the Configured SU SW File described above.

- Configured SU Operation: The operation to be performed with the Configured SU SW File after network entry: None (do not load), Load (load to Shadow), Run from Shadow or Set as Main.

- Maximum Number of Voice Calls: The maximum number of voice calls that can be supported by the AU.

- Active Voice Calls: The number of currently active voice calls handled by the AU.

- AU IDU Type: The type of the AU-IDU module. The options are:

  - Two Channels
  - Four Channels
  - Two Channels -HP
  - Four Channels-HP

  The HP suffix indicates the AU-IDU is capable of supporting higher currents of -54 VDC power supply from the PIU (via the IF cable) to the ODU.

  In the current release all AU-IDUs are Four Channels-HP.

- Operation Mode: The air protocol used by the AU. The defined operation modes are Standard (used in first generation BreezeMAX systems) and Advanced Si (used in the WiMAX ready systems supporting Self Install SUs).

  In the current release only Advanced Si Operation Mode is applicable.

For more details on SW File/Version and Operation refer to Section 4.8.5.2.3.

4.8.2 Upgrading AU's SW

To facilitate efficient upgrade of AU's SW, two upgrade levels are available:

- AU level, for upgrading a single AU, described in Section 4.8.5.2.3.2
- Base Station level, for upgrading all AUs in the Base Station, as described in the following section.

4.8.3 SW Files in NPU

Up to four AU SW files can be stored in the NPU. Any of the available files can be loaded by the NPU to a selected AU. When four AU files are stored in the NPU, a new file cannot be added until at least one of the existing files is deleted.

A default SW File Name and Default Action can be defined. These are the SW File and associated Action that will be used for a new AU after being installed, as well as after each reset. This feature simplifies the upgrade process, by defining the SW File and Action for all AUs. Two different pairs of Default SW File Name and Default Action may be defined, to optionally support AUs using either Standard Operation Mode or Advanced Si (Advanced - Self Install) Operation Mode. These Default SW File Name and Default Action are applicable to all AUs in the Base Station using the specified Operation Mode. However, they are not applicable for any AU whose Configured SW File Name (see Section 4.8.1) is other than None.

This menu enables viewing the current AU SW files stored in the NPU and deleting selected file(s). It also enables defining the Default SW File Name and Default Action for each Operation Mode, and deleting the Configured SW Files in all AUs.

4.8.3.1 Show Files

Select this option to display the AU SW files currently stored in the NPU, the Default SW Files and Default Actions. For each available SW file, the file name and the version are shown.

4.8.3.2 Default SW File (Standard)

Select this option to define the Name of the SW File to be used for upgrading an AU using Standard Operation Mode after installation as well as after each reset, and the Action to be taken with this file. Not applicable for any AU whose Configured SW File Name is other than None (see “SW File” on page 139).

NOTE

The Default SW File (Standard) option is not applicable to this release that does not support products operating in Standard Operation Mode.

The Default SW File (Standard) parameters are:

4.8.3.2.1 Name

The Name of the SW File to be used for upgrading an AU using Standard Operation Mode after installation as well as after each reset. Should be one of the AU SW Files currently stored in the NPU, or None (null).

4.8.3.2.2 Action

The operation to be performed with the Default SW File (Standard) when an AU using Standard Operation Mode is installed, as well as after each reset: None (do not load), Load (load to Shadow), Run from Shadow or Set as Main. Refer to Section 4.8.5.2.3.2.2 for more details on these Actions.

4.8.3.3 Default SW File (Advanced Si)

Select this option to define the Name of the SW File to be used for upgrading an AU using Advanced Si Operation Mode after installation as well as after each reset, and the Action to be taken with this file. Not applicable for any AU whose Configured SW File Name is other than None (see "SW File" on page 139) The Default SW File (Advanced Si) parameters are:

4.8.3.3.1 Name

The Name of the SW File to be used for upgrading an AU using Advanced Si Operation Mode after installation as well as after each reset. Should be one of the AU SW Files currently stored in the NPU, or None (null).

4.8.3.3.2 Action

The operation to be performed with the Default SW File (Advanced Si) when an AU using Advanced Si Operation Mode is installed, as well as after each reset: None (do not load), Load (load to Shadow), Run from Shadow or Set as Main. Refer to Section 4.8.5.2.3.2.2 for more details on these Actions.

4.8.3.4 Delete a File

Select this option and enter the name of an existing AU SW file to delete it from the NPU's memory.

4.8.3.5 Clear All Configured AU SW Files

Select this option to clear (delete) the AU Configured SW File in all AUs.

4.8.4 Select

Use this option and select a slot to access the AU Slot # menu that will enable managing and configuring the AU in the selected slot, or pre-configuring the AU that will be installed in the slot at a later time.

The available AU slot IDs are 1-4, 7-9.

4.8.5 AU Slot # Menu

The AU Slot # menu enables managing and configuring the AU in the selected slot, or pre-configuring the AU that will be installed in the slot at a later time. The AU Slot # menu includes the following options:

- Show
- Unit Control
- Configuration
- Performance Monitoring

4.8.5.1 Show

Select this option to view the current value/selected option of applicable parameters. In addition, some general status information is shown, as follows:

- General Status and Operation Parameters:
  - IDU Serial Number
  - IDU IF Card HW Revision
  - IDU IF Card HW Configuration
  - IDU Boot Version
  - IDU Main Card HW Revision
  - IDU Main Card HW Configuration
  - IDU Temperature (Celsius)
  - IDU Type
  - Cumulative Power On Time (hours)
  - Operation Mode (Standard or Advanced Si)
  - Diversity Mode
- SW Files and Versions:
  - Configured SW File Name
  - Configured SW Version

- Configured Operation
- Configured SU SW File Name
- Configured SU SW Version
- Configured SU Operation
- Main SW File Name
- Main SW Version
- Shadow SW File Name
- Shadow SW Version
- Running From (Main or Shadow)

- MAC Parameters:
  - Base Station ID (Operator ID, Cell ID, Sector ID)
  - Operator ID (as defined in the Base Station-Cell menu)
  - Cell ID (as defined in the Base Station-Cell menu)
  - Sector ID
  - ARQ Enable/Disable
  - Maximum Cell Radius (km)
- Multirate Parameters:
  - Multirate Enable/Disable
  - Uplink Basic Rate
  - Downlink Basic Rate
- ATPC Parameters (as defined in the Base Station-Cell menu):
  - ATPC Enable/Disable
  - Optimal Uplink RSSI (dBm)
- Voice Parameters:
  - Maximum Number of Voice Calls

- Active Voice Calls

4.8.5.2 Unit Control

The AU Unit Control menu enables resetting the AU and managing the SW versions of the module.

The Unit Control menu includes the following options:

- Reset
- Set Factory Defaults
- SW Version Control

4.8.5.2.1 Reset Unit

Select this option to reset the unit. To avoid unintentional reset, you will be prompted to confirm the reset request. Changes to some of the configurable parameters are applied only after reset. Refer to Section 4.11 for information on which parameters are changeable in run time and which changes are applied only after reset.

4.8.5.2.2 Set Factory Defaults

Select this option to set the AU parameters to their factory default values. Refer to Section 4.11 for information on the factory default values of these parameters. The parameters will revert to their default values after the next reset.

4.8.5.2.3 SW Versions Control

The AU can contain two SW versions:

- Main: Each time the AU resets it will reboot using the version defined as Main.
- Shadow: Normally, the Shadow version is the backup version. Each time a new SW File is downloaded to the AU, it will be stored as a Shadow version, replacing the previous Shadow Version.

The process of upgrading to a new SW version is controlled by the NPU, and is performed using one of the AU SW files installed in the NPU. If the specified AU SW file does not exist in the AU, it will be downloaded to the AU and the requested operation will be executed, as described below. If it already exists in the AU, then actual loading is not necessary.

The following options are available in the SW Version Control menu:

4.8.5.2.3.1 Show Versions

Select this option to view the following information:

- Versions in AU:
  - Main SW File Name
  - Main SW Version
  - Shadow SW File Name
  - Shadow SW Version
  - Running From: Main or Shadow
- Available Versions in NPU: The available AU SW file names and the SW version of each file.

4.8.5.2.3.2 SW File

Select this option to define the Name of the SW File to be used for upgrading the AU after installation as well as after each reset, and the Action to be taken with this file:

4.8.5.2.3.2.1 Name

The Name of the SW File to be used for upgrading the AU after installation as well as after each reset. Should be one of the AU SW Files currently stored in the NPU, or None (null).

4.8.5.2.3.2.2 Action

The operation to be performed with the SW File when the AU is installed, as well as after each reset: None (do not load), Load (load to Shadow), Run from Shadow or Set as Main:

- **None**: Select None to cancel a pending request for another operation (an operation will be executed only after the next reset).
- **Download**: Select this option to download the specified SW File to the Shadow memory of the AU. If the file already exists in the AU, no action will take place.
- **Run from Shadow**: Select this option to download the specified SW File from the NPU to the Shadow memory of the AU, reset the AU and reboot using the Shadow version. Note that because the process is controlled by the NPU, the AU will continue running from the Shadow version after reset.

If the specified file already exists as the Shadow version (meaning that previously a Download operation was executed for this SW File), the only actual operation to take place will be to reset and run from Shadow. If the specified file already exists as the Main version, no action will take place.

- **Set as Main**: Select this option to download the SW File from the NPU to the Shadow memory of the AU, reset the AU and reboot using the Shadow version, and then swap the Main and Shadow SW Version, so that the running version (which was previously the Shadow version) will become the Main version, to be used after next reset.

  If the specified file already exists as the running version and it is defined as the Shadow version (meaning that previously a Download and Run from Shadow operation was executed for this SW File), the only actual operation to take place will be to swap the Main and Shadow versions. If it is already defined as the Main version, no action will take place.

4.8.5.2.3.3 SU SW File

Select this option to define the Name of the SW File to be used for upgrading the SUs served by this AU after network entry, and the Action to be taken with this file. Not applicable for any Permanent SU whose Configured SW File Name is other than None (see Section 4.9.7.2.4.2) The SU SW File parameters are:

4.8.5.2.3.3.1 Name

The Name of the SW File to be used for upgrading the SUs served by this AU. Should be one of the AU SW Files currently stored in the NPU, or None (null).

4.8.5.2.3.3.2 Action

The operation to be performed with the SU SW File: None (do not load), Load (load to Shadow), Run from Shadow or Set as Main. Refer to Section 4.9.7.2.4.2.2 for more details on these Actions.

4.8.5.2.3.4 Clear All Configured SU SW Files for this AU

Select this option to clear (delete) the SU Configured SW File in all Permanent SUs served by this AU.

4.8.5.3 Configuration

The AU Configuration menu enables viewing and updating the AU's parameters. It is important to note that changes to some parameters take effect only after reset. For these parameters, the applicable Show menus display the Current as well as the Configured value.

The Configuration menu includes the following options:

- MAC
- Phy
- Multi Channel
- Multirate
- Voice Parameters

4.8.5.3.1 MAC Parameters

The MAC menu enables viewing/updating the following parameters:

4.8.5.3.1.1 ID Parameters

The Operator ID, Cell ID and Sector ID constitute together the Base Station ID, which is the unique identifier of the AU. An SU can be authenticated by the AU only if its defined parameters match the Base Station ID configured for the AU.

The Operator ID and Cell ID are defined for the Base Station (see Section 4.4.2.4) and are used by all AUs in the Base Station. In the AU's MAC Parameters menu they are available only in the Show option.

The Sector ID parameter consists of three digits in the range of 0 to 255.

The default Sector ID is 206.

Changes in Sector ID are applied only after reset.

4.8.5.3.1.2 ARQ Enable/Disable

The ARQ Enable/Disable parameter controls whether to use an ARQ algorithm for detecting errors and requesting retransmissions of applicable unicast messages (applicable only for Best Effort and Non Real Time services).

The default is Disable.

4.8.5.3.1.3 Maximum Cell Radius

The Maximum Cell Radius is used to adapt various timing parameters of the MAC to the time it takes a message to reach its destination. This time delay is dependent upon the distance between the originating and receiving units. The timing parameters should be adapted to the largest expected delay, which is determined from the distance from the AU of the farthest SU served by it.

NOTE

For Non-Line-Of-Sight (NLOS) links using refractions, the cell distance should be higher than the line-of-sight distance. Typically a 10% margin is a good estimate for the increase in distance due to the NLOS operation.

The basic time element (symbol) used by a system operating in TDD mode is 68 microseconds for a bandwidth of 3.5 MHz and 50 microseconds for a bandwidth of 5 MHz. This symbol size is translated to a round trip delay of approximately 20 km for 3.5 MHz bandwidth and 15 km for 5 MHz bandwidth, or a cell radius of 10 km or 7.5 km, respectively.

NOTE

An SU located at a distance larger than the Maximum Cell Radius will be rejected during the network entry process.

The values range for the Maximum Cell Distance is from 10 to 50 km for a bandwidth of 3.5 MHz, and 7 to 45 km for a bandwidth of 5 MHz (representing a maximum delay of 6 symbols).

NOTE

The actual value that the system will use is a multiple of the the one-way delay for a single basic time element: N*10 km for a bandwidth of 3.5 MHz or N*7.5 km for a bandwidth of 5 MHz, where N is a an integer from 1 to 6. The value configured for the Maximum Cell Radius will be up-rounded to the nearest applicable value.

The default is 20 km.

4.8.5.3.2 Phy Parameters

The Phy menu enables viewing/updating the Bandwidth parameter:

4.8.5.3.2.1 Bandwidth

The frequency bandwidth used by the radio. A change in the Bandwidth parameter will take effect only after resetting the AU.

The Admin Status of all Channels belonging to the same AU must be disabled to enable a configuration change in the Bandwidth parameter.

The available options are:

1 - 1.75 MHz

2 - 3.5 MHz

3 - 5.0 MHz

4 - 7 MHz

5 - 10 MHz

The current Bandwidth values applicable for systems operating in TDD Mode are 3.5 MHz and 5 MHz. The AU will reject any selection of a Bandwidth not supported by it.

The default is 3.5 MHz.

4.8.5.3.3 Multi Channel Parameters

Each AU can include up to 4 Channels with Channels IDs from 1 to 4, corresponding to up to 4 ODU connectors. Each ODU connector (channel) can be connected to an ODU. The Multi Channel menu includes the following options:

- Show Summary
- Diversity Mode
- Select

Following is a description of these options:

4.8.5.3.3.1 Show Summary

Select this option to view the following information for each Channel:

- Channel (1-4)
- Associated ODU
- Downlink (Tx) Frequency (MHz)
- Uplink (Rx) Frequency (MHz): Applicable only to Channels associated with a defined ODU. Computed using the rules defined in the Frequency Bands Configuration File.
- Admin Status (Enabled/Disabled)
- Tx Power: Applicable only to Channels associated with a defined ODU. The Tx Power in dBm configured in the ODU.
- Associated Radio Cluster: Applicable only to Channels associated with a defined ODU. The Associated Radio Cluster defined in the ODU.

Upon first power-up of the Base Station, the channels are defined automatically, as follows:

- Associated ODU: Channel 1 of all AUs is automatically associated with an ODU:

Table 4-4: Automatic Association of Channel 1 Upon First Power-Up

AU Slot ID	ODU ID
AU Slot 1	1
AU Slot 2	2
AU Slot 3	3
AU Slot 4	4
AU Slot 7	5
AU Slot 8	6
AU Slot 9	7

For all other Channels (2-4) the Associated ODU is NA.

- Downlink (Tx) Frequency (MHz): 3551.750

- Admin Status: Enabled for Channel 1, Disabled for all other Channels (2-4).

4.8.5.3.3.2 Diversity Mode

The Diversity Mode of the AU. For details on diversity modes refer to "Base Station Radio Configurations" on page 7.

The available options are:

1 - No Diversity

2 - Second Order Diversity

3 - Fourth Order Diversity

The default is No Diversity.

4.8.5.3.3.3 Select

Use this option to select a Channel ID (1-4) to open the Channel # menu for viewing or updating the Channel's parameters. The configurable Channel parameters are:

- **Associated ODU**: An ODU ID (1-24) of an already defined ODU.

- **Downlink (Tx) Frequency (MHz)**: The Tx frequency in MHz, which must be in accordance with the selected Bandwidth (see Section 4.8.5.3.2.1) and the rules

defined in the Frequency Bands File for the frequency band selected as the Configured ODU Frequency Band of the associated ODU (see Section 4.7.4.3). The help text (displayed upon clicking the Tab key) reflects the limitations imposed by these rules.

In addition, the following rules must be followed in No Diversity mode if more than one channel is used:

1. After configuring the Downlink Frequency f1 for one of the AU's Channels, the Downlink Frequencies for other Channels of the same AU should be configured using increments of +/- 0.875 MHz from the defined frequency: f1 +/-(N*0.875).
2. The Downlink Frequencies of all Channels of the same AU should belong to the same Frequency Bands Group (see Section 4.7.5).

- **Admin Status**: The Admin Status must be disabled to enable changes in the Configured ODU Frequency Band of an associated ODU. If the Configured ODU Frequency Band differs from the actual band supported by the ODU, a mismatch trap will be sent by the AU upon trying to associate it with a Channel and the association will be rejected.

  The Admin Status of all Channels belonging to the same AU must be disabled to enable a configuration change in the Bandwidth parameter.

If the Diversity Mode is set to Fourth Order Diversity, the Downlink (Tx) Frequency and Admin Status of Channels 2-4 are not configurable: they are set automatically to the same values configured for Channel 1. The Tx Power of the ODUs associated with Channels 2-4 will be forced to the value configured for the ODU associated with Channel 1.

If the Diversity Mode is set to Second Order Diversity, the Downlink (Tx) Frequency and Admin Status of Channel 2 are not configurable: they are set automatically to the same values configured for Channel 1. The Tx Power of the ODU associated with Channel 2 will be forced to the value configured for the ODU associated with Channel 1. Channels 3 and 4 are not used in Second Order Diversity Mode.

The Show menu includes also the following read-only parameters:

- **Tx Power**: As configured in the Associated ODU.
- **Associated Radio Cluster**: As configured in the Associated ODU.

- **Uplink (Rx) Frequency**: Computed from the configured Downlink (Tx) Frequency according to the Duplex Separation of the applicable Frequency Band. In TDD systems the Uplink (Tx) Frequency is the same as the Downlink (Tx) Frequency.

- **Frequency Band**: The Configured ODU Frequency Band. If there is a mismatch between the Configured ODU Frequency Band and its actual band, both values will be displayed.

- **Operational Status**

4.8.5.3.4 Multirate Parameters

BreezeMAX employs a multirate algorithm to dynamically adapt the modulation scheme and Forward Error Correction (FEC) coding to actual link conditions. The algorithm is managed by the AU taking into account also information received from the served SUs. Optimal values are calculated separately for the uplink and downlink for each SU. MAP messages transmitted to the SUs include information on the uplink rate that should be used by each SU for its next transmission.

The Basic Rate is the minimum rate to be used by the Multirate algorithm. This is also the rate to be used for downlink broadcasts and multicasts. Broadcasts and multicasts messages are not acknowledged, so that the ARQ mechanism cannot be used and there is no way to guarantee that all intended recipients will receive them properly. In addition, multicasts and broadcasts are sent to multiple recipients with different link qualities. Therefore, it is preferable to use a relatively low rate for these transmissions, thus reducing the probability of errors and increasing the likelihood that all intended recipients will receive them properly.

In the uplink, this is the rate to be used by SUs for non-scheduled transmissions, such as during the contention period.

The Basic Rate is also the initial rate to be used by the algorithm for each new SU that joins the cell when the Multirate algorithm is enabled.

When the Multirate algorithm is disabled, communication with connected SUs will continue using the last uplink and downlink rates selected by the Multirate algorithm. The Set Rates option in the SU (see Section 4.9.7.3.4.2), which becomes available only when the Multirate algorithm is disabled in the AU, enables setting the Uplink Current Rate and the Downlink Current Rate to any of the values listed in Table 4-5.

The multirate algorithm chooses dynamically between 8 rates. These are also the rates that can be configured for the Basic Rate parameters.

Table 4-5: Rates (Modulation Schemes and Coding)

No.	Rate
1	BPSK 1/2
2	BPSK 3/4
3	QPSK 1/2
4	QPSK 3/4
5	QAM16 1/2
6	QAM16 3/4
7	QAM64 2/3
8	QAM64 3/4

The Multirate menu enables viewing/updating the following parameters:

4.8.5.3.4.1 Multirate Enable/Disable

The Multirate Enable/Disable parameter controls whether the multirate algorithm should be used to determine current optimal rates in both the uplinks and the downlinks.

The default is Enable.

NOTE

The multirate algorithm should always be enabled. The option to disable it is available to enable using a fixed rate to support certain tests. After each reset, the AU boots with the multirate enabled, disregarding its status before the device was reset.

4.8.5.3.4.2 Uplink Basic Rate

The Basic Rate for all uplinks.

The default rate is the lowest rate BPSK 1/2 (rate 1).

4.8.5.3.4.3 Downlink Basic Rate

The Basic Rate for all downlinks.

The default rate is the lowest rate BPSK 1/2 (rate 1).

4.8.5.3.5 Voice Parameters

The Voice Parameters option includes a single parameter, Maximum Number of Voice Calls:

4.8.5.3.5.1 Maximum Number of Voice Calls

This parameter sets the upper limit of simultaneous voice calls that will be supported by the AU.

The range is from 0 to 300 Voice Calls.

The default is 50.

4.8.6 Performance Monitoring

The AU Performance menu includes the following options:

- Ports Counters
- Burst Error Rate Counters

4.8.6.1 Ports Counters

The Ports Counters option enables viewing or resetting the Back-Panel and Wireless ports counters. The information displayed for each counter is the accumulated number since the last time the counters were reset. The counters are reset each time the AU is reset, or upon activating the Reset option.

NOTE

The Back-Panel port of the AU is the internal Ethernet port between the AU and the NPU.

The counters describe the traffic at the Back-Panel and Wireless ports, as follows:

- Back-Panel Port Counters
  - Data Bytes Received: The total number of data bytes received from the Back-panel (NPU). Management frames and frames with errors are not included.
  - Data Bytes Discarded on Rx: The number of bytes in packets discarded due to communication errors between the AU and the NPU.
  - Data Bytes Transmitted: The total number of data bytes transmitted to the Back-Panel (NPU). Management frames and frames with errors are not included.
  - Data Bytes Discarded on Tx: This count is always 0 (No discards).
- Wireless Port Counters
  - Data Bytes Received: The total number of data bytes received from the Wireless link. MAC management frames and frames with errors are not included.

- Data Bytes Discarded on Rx: The number of bytes in packets received from the Wireless link and discarded due to MAC protocol receive errors, such as duplicate sequence number, wrong sequence number etc. (not CRC errors).
- Data Bytes Transmitted: The total number of data bytes transmitted to the Wireless link. MAC Management frames and frames with errors are not included.
- Data Bytes Discarded on Tx: The number of bytes in packets discarded due to congestion in the wireless medium.
- ARQ Enabled Bytes Transmitted: The number of bytes transmitted over BE and NRT connections. Applicable only if the ARQ mechanism is enabled.
- Bytes Retransmitted: The number of unacknowledged bytes that were retransmitted. Retransmissions are applicable only to BE and NRT connections provided the ARQ mechanism is enabled.
- Retransmission Rate (%): Retransmission Rate in percents is defined as: 100*(Bytes Retransmitted)/(ARQ Enabled Bytes Transmitted).

4.8.6.2 Burst Error Rate Counters

The Burst Error rate Counters option enables selecting a specific SU by its MAC address for viewing or resetting the Burst Error Rate counters for the applicable downlink. The information displayed for each rate in the uplink is the accumulated number since the last time the counters were reset. The downlink counters can be viewed in the applicable SU menu. For each rate the displayed information (for the uplink) includes:

- Total Burst
- Error Bursts
- Error Rate

The counters are reset each time the AU is reset, or upon activating the Reset option.

4.9 SU Menu

The SU menu includes the following options:

- Show Summary
- Show Summary by AU
- SW Files in NPU
- Select by Name
- Select by MAC Address
- Add

Following is a detailed description of these options.

4.9.1 Show Summary

Select this option to view summary information and main details for all connected and pre-configured SUs.

- For each SU, the following information is displayed:
  - MAC Address
  - SU Name
  - SU Type: BMAX CPE, PRO CPE, PRO-L CPE, Si CPE.
  - SU Status (Permanent or Temporary)
  - SUID (an ID allocated to each SU by the connected AU)
  - Registration Status (In Service, Out Of Service)
  - Configured SW File Name: The SW File configured in the NPU (together with the Configured Operation).
  - Configured SW Version: The SW Version of the SW File configured in the NPU.

- Configured Operation: The operation to be performed with the Configured SW File when the SU is connected, as well as after each reset: Null (do not load), Load (load to Shadow), Run from Shadow or Set as Main.
- SW Download Status: The status of the last SW download operation (or None).
- SU IDU Type: Basic or IDU-NG-4D1W
- Number of Gateways: The number of Alvarion Gateways connected to the SU (including IDU-NG-4D1W, if exists).
- Service Fault Status: OK or reason for denying services to the SU. The reason can be:

  1. Loop problem. A loop was detected on the Ethernet side of the SU. An rbNetworkingError Trap will be sent, and services to this SU will be denied until resetting the SU from the network (NPU) side (provided the problem no longer exists). The problem is detectable through periodical (every 5 seconds) transmissions to the Ethernet link of SNAP packets with "AA AA 03" in the header, and the destination MAC address is 00:10:E7:00:00:01. If the SU receives this packet from the Ethernet, it means that there is a loop and the SU will send an appropriate message to the NPU.

NOTE

Another loop avoidance mechanism that is transparent to the operator is performed by the NPU: The NPU scans packets received from the network (DATA port) and verifies that the SRC MAC in the received packet does not match any of the addresses in the NPU's bridging table. If there is a match it means that the source MAC address of the message received from the network side is identical to a MAC address of a device behind one of the SUs served by the Base Station. In case of a match, the NPU discards all packets designated to the device with this MAC address, until it's aging time expires.

  2. Duplicate SU Name: The SU Name is already in use by another SU. An rbSuDuplicateName Trap will be sent and services to the SU will be denied until another unique name is configured for the SU (see also Section 4.9.7.3.1.1).

- Summary Information

  - Total Number of SUs: The total number of SUs in the database (including connected and pre-configured SUs)
  - Total Connected SUs
  - SUs Connected to AU Slot N, where N=1-4, 7-9.

NOTE

An SU that is defined as Temporary will be deleted from the database when it is disconnected.I

4.9.2 Show Summary by AU

Select this option to view the total number of SUs connected to a specific AU as well as main details on these SUs, as described in Section 4.9.1. You will be prompted to select the required AU Slot ID.

4.9.3 Upgrading SU's SW

To facilitate efficient upgrade of SU's SW, tree upgrade levels are available:

- SU level, for upgrading a single SU, described in Section 4.9.7.2.4.2.
- AU level, for upgrading all SUs served by a specific AU, as described in Section 4.8.5.2.3.3
- Base Station level, for upgrading all SUs in the Base Station, as described in the following section.

4.9.4 SW Files in NPU

Up to four SU SW files can be stored in the NPU. Any of the available files can be loaded by the NPU to a selected SU. When four SU files are stored in the NPU, a new file cannot be added until at least one of the existing files is deleted.

Default SW File Names and Default Actions can be defined. These are the SW File and associated Action that will be used for an SU after network entry. This feature simplifies the upgrade process, by defining the SW File and Action for all SUs served by the Base Station. Two different pairs of Default SW File Name and Default Action may be defined, to optionally support SUs using either (Standard Operation Mode or Advanced Si (Advanced - Self Install) Operation Mode. These Default SW File Names and Default Actions are applicable to all SUs in the Base Station using the specified Operation Mode. However, they are not applicable to any SU served by an AU in which the SU SW File (see Section 4.8.5.2.3.3) is other than None (null). They are also not applicable to any Permanent SU whose Configured SW File Name (see Section 4.9.7.2.4.2) is other than None (null).

This menu enables viewing the current SU SW files stored in the NPU and deleting selected file(s). It also enables defining the Default SW File Name and Default Action for each Operation Mode.

4.9.4.1 Show Files

Select this option to display the SU SW files currently stored in the NPU. For each available SW file, the file name and the version number are displayed.

In addition, the Default SU SW File Name and Default Action for each Operation Mode are also displayed.

4.9.4.2 Default SW File (Standard)

Select this option to define the Name of the SW File to be used for upgrading an SU using Standard Operation Mode after network entry, and the Action to be taken with this file. Not applicable to any SU served by an AU in which the SU SW File (see Section 4.8.5.2.3.3) is other than None (null). They are also not applicable to any Permanent SU whose Configured SW File Name (see Section 4.9.7.2.4.2) is other than None (null).

NOTE

The Default SW File (Standard) option is not applicable to this release that does not support products operating in Standard Operation Mode.

The Default SW File (Standard) parameters are:

4.9.4.2.1 Name

The Name of the SW File to be used for upgrading an SU using Standard Operation Mode after network entry. Should be one of the SU SW Files currently stored in the NPU, or None (null).

4.9.4.2.2 Action

The operation to be performed with the Default SW File (Standard) after network entry of an SU using Standard Operation Mode: None (do not load), Load (load to Shadow), Run from Shadow or Set as Main. Refer to Section 4.9.7.2.4.2.2 for more details on these Actions.

4.9.4.3 Default SW File (Advanced Si)

Select this option to define the Name of the SW File to be used for upgrading an SU using Advanced Si Operation Mode after network entry, and the Action to be taken with this file. Not applicable to any SU served by an AU in which the SU SW File (see Section 4.8.5.2.3.3) is other than None (null). They are also not applicable to any Permanent SU whose Configured SW File Name (see Section 4.9.7.2.4.2) is other than None (null). The Default SW File (AD-Si) parameters are:

4.9.4.3.1 Name

The Name of the SW File to be used for upgrading an SU using Advanced Si Operation Mode after network entry. Should be one of the SU SW Files currently stored in the NPU, or None (null).

4.9.4.4 Delete a File

Select this option and enter the name of an existing SU SW file to delete it from the NPU Flash memory.

4.9.5 Select by Name

Use this option to select an SU by name to access the SU # menu that will enable managing and configuring the selected SU, viewing its performance information or deleting it from the database.

4.9.6 Select by MAC Address

Use this option to select an SU by its MAC address to access the SU # menu that will enable managing and configuring the selected SU, viewing its performance information or deleting it from the database.

4.9.7 SU # Menu

The SU # menu enables managing and configuring the selected SU. The SU # menu includes the following options:

- Show
- Unit Control
- Configuration
- Performance Monitoring
- Show MAC Addresses Behind SU
- Delete

4.9.7.1 Show

Select this option to view the current value/selected option of applicable parameters. In addition, some general status information is displayed, as follows:

- Equipment and Registration Parameters:

- MAC Address
- SU MAC Control Number (a number computed from the MAC Address that can be used for verification purposes)
- SU Name (User Name)
- SU Type: BMAX CPE, PRO CPE, PRO-L CPE, Si CPE.
- Operation Mode: Standard for first generation BreezeMAX system, or Advanced Si (Advanced Self Install) for WiMAX-ready systems supporting Self Install SU. In the current release only Advanced Si is applicable.
- Organization Name
- Address
- Country
- SU Status (Permanent or Temporary)
- Connected AU Slot ID
- SUID
- SU IDU Type
- Number of Gateways
- Service Fault Status

- General HW Parameters
  - Serial Number
  - Cumulative Power On Time (hours)
  - RF Card HW Revision
  - Boot Version
  - Main Card HW Revision
  - Main Card HW Configuration
- SW Versions information:
  - Main SW File Name
  - Main SW Version

- Shadow SW File Name
- Shadow SW Version
- Running From (Main or Shadow)
- Configured SW File Name
- Configured SW Version
- Configured Operation

- MAC Parameters
  - Base Station ID
  - Base Station Mask

- Phy Parameters
  - Bandwidth (MHz)
  - Uplink (Tx) Frequency (MHz)
  - ATPC Parameters and Current Link Quality Indicators
  - ATPC Support
  - Uplink RSSI (dBm)
  - Uplink SNR (dB)
  - Uplink Current Rate
  - Downlink RSSI (dBm)
  - Downlink SNR (dB)
  - Downlink Current Rate
  - TX Power (dBm)
  - Estimated Distance from BS (m). The accuracy is from several hundreds of meters for line-of-sight links to 1500 meters for non-line-of-sight links.

- Bridging Parameters
  - Enable/Disable Limit on Number of Supported Devices
  - Maximum Number of Supported Devices

- Bridge Aging Time (minutes)

- Si CPE Parameters
  - Antenna Selection: The antenna configured locally in the Si CPE
    - Internal Antenna (1 - 6)
    - External (7)
    - Automatic (8)
  - Interface Type (Ethernet or USB.
  - Smart Card Status (Installed/Not Installed/Fault)

- Frequency Scanning Parameters
  - Start Rx Frequency
  - End Rx Frequency
  - Scanning Main Step
  - Intermediate Step Mask

- Best BST/AU Parameters
  - Best BST/AU Support
  - Best BST/AU ID
  - Best BST/AU ID Mask
  - Selected BST/AU ID
  - Selected Downlink (Rx) Frequency
  - Best BST/AU Table: includes details of all applicable BST/AUs: BST/AU ID, Downlink (Rx) Frequency, SNR (dB), Rx Antenna Number.

4.9.7.2 Unit Control

The SU Unit Control menu enables defining the SU's status, resetting the SU and managing the SW versions of the unit.

The Unit Control menu includes the following options:

- Status

- Reset
- Set Factory Defaults
- SW Version Control

4.9.7.2.1 SU Status

The SU Status parameter enables defining the status of the SU, which determines the services it can receive.

The available options are:

1 - Permanent

2 - Temporary

NOTE

An SU that is defined as Temporary will be deleted from the database when it is disconnected.

4.9.7.2.2 Reset Unit

Select this option to reset the unit. To avoid unintentional reset, you will be prompted to confirm the reset request. Changes to some of the configurable parameters are applied only after reset. Refer to Section 4.11 for information on which parameters are changeable in run time and which changes are applied only after reset.

4.9.7.2.3 Set Factory Defaults

Select this option to set the SU parameters to their factory default values. Refer to Section 4.11 for information on the factory default values of these parameters. The parameters will revert to their default values after the next reset.

4.9.7.2.4 SW Versions Control (only for Permanent SUs)

The SU can contain two SW versions:

- Main: Each time the SU resets it will reboot using the version defined as Main.
- Shadow: Normally the Shadow version is the backup version. Each time a new SW File is downloaded to the SU, it will be stored as a Shadow version, replacing the previous Shadow Version.

The process of upgrading to a new SW version is controlled by the NPU, and is performed using one of the SU SW files installed in the NPU. If the specified SU SW file does not exist in the SU, it will be downloaded to the SU and the requested

operation will be executed, as described below. If it already exists in the SU, then actual loading is not necessary.

The following options are available in the SW Version Control menu:

- Show SW Versions
- SW File

4.9.7.2.4.1 Show SW Versions

Select this option to view the following information:

- SW Versions in SU:
  - Main SW File Name
  - Main SW Version
  - Shadow SW File Name
  - Shadow SW Version
  - Running From: Main or Shadow
- Available Versions in NPU: The available SU SW file names and the SW Version of each file.

4.9.7.2.4.2 SW File

Select this option to define the Name of the SW File to be used for upgrading the SU after network, and the Action to be taken with this file:

4.9.7.2.4.2.1 Name

The Name of the SW File to be used for upgrading the SU after network entry. Should be one of the SU SW Files currently stored in the NPU, or None (null).

4.9.7.2.4.2.2 Action

The operation to be performed with the SW File after network entry of the SU: None (do not load), Load (load to Shadow), Run from Shadow or Set as Main:

- None: Select None to cancel a pending request for another operation (an operations will be executed only after the next reset).
- Download: Select this option to download a specified SW file from the NPU to the Shadow memory of the SU.

If the specified file already exists in the SU, no action will take place.

- Run from Shadow: Select this option to download a specified SW file from the NPU to the Shadow memory of the SU, reset the SU and reboot using the Shadow version. Note that because the process is controlled by the NPU, the SU will continue running from the Shadow version after reset.

  If the specified file already exists as the Shadow version (meaning that previously a Download operation was executed for this file name), the only actual operation to take place will be to reset and run from Shadow. If the specified file is the current Main version, no action will take place.

- Set as Main: Select this option to download a specified SW file from the NPU to the Shadow memory of the SU, reset the SU and reboot using the Shadow version, and then swap the Main and Shadow SW Version, so that the running version (which was previously the Shadow version) will become the Main version, to be used after next reset.

  If the specified file already exists as the running version and it is defined as the Shadow version (meaning that previously a Download and Run from Shadow operation was executed for this file name), the only actual operation to take place will be to swap the Main and Shadow versions. If it is already defined as the Main version, no action will take place.

4.9.7.3 Configuration

The SU Configuration menu enables viewing and updating the SU's parameters.

The Configuration menu includes the following options:

- Registration
- MAC
- Phy
- Multirate and ATPC
- Voice/Networking Gateways
- Ethernet Port
- Installer Password

- Bridging Parameters
- License
- Best BST/AU
- Frequency Scanning

4.9.7.3.1 Registration Parameters

The SU Registration Parameters option in the NPU Monitor enables viewing the SU's Registration parameters. Registration parameters can be configured only locally at the SU (via the Ethernet port).

4.9.7.3.1.1 SU Name

The SU Name can only be configured locally in the SU (User Name).

The default SU Name given to a new SU during the definition process (see Section 4.9.8) is SU@<SU's MAC Address>. An SU that is added to the database is added as Permanent. When an SU that exists in the database as a Permanent SU is registered, it receives services based on its MAC address, and the default SU Name is replaced by the name configured in the SU (User Name).

A Base Station cannot serve two SUs with the same User Name. Upon identifying an SU with an SU Name (User Name) that is identical to that of a previously registered SU, the new SU will be registered (to enable management), but will not receive any services. Its name in the NPU database will be changed to SU@<SU's MAC Address>. The system administrator will be informed of the problem through the Fault Status parameter in any of the relevant Show menus (Fault Status 2) and through a trap message (rbSuDuplicateName trap). If the administrator decides that the SU is legitimate and should receive services, a new User Name must be configured in the SU. The SU will receive services only after configuring it with a User Name that is unique in the Base Station’s database.

4.9.7.3.1.2 Organization Name

The Organization Name configured in the SU.

4.9.7.3.1.3 Address

The Address configured in the SU.

4.9.7.3.1.4 Country

The Country name configured in the SU.

4.9.7.3.2 MAC Parameters

The SU MAC menu enables viewing/updating the following parameters:

4.9.7.3.2.1 Base Station ID

The Base Station ID is the identifier of the AU/µBST to which the SU can connect. An SU can be authenticated by an AU/µBST only if the Base Station ID and Base Station ID Mask configured in the SU match the Base Station ID configured for the AU/µBST.

When the Best BST/AU Support is disabled, the SU will start searching for available AUs in the range defined by the Base Station ID and Base Station ID Mask, and will try to connect to the first found AU whose Base Station ID is in the defined range.

Refer to Section 4.9.7.3.10 for details on the AU selection process When the Best BST/AU Support is enabled.

A change in the Base Station ID and Base Station ID Mask will take effect only after resetting the SU.

The Base Station ID consists of six groups of up to three digits each, where the range for each group is 0 to 255. The first three groups define the Operator ID, the next two groups define the Cell ID and the sixth group defines the Sector (AU) ID.

A change in the Base Station ID is applied only after reset.

4.9.7.3.2.2 Base Station ID Mask

The Base Station ID Mask, together with the Base station ID define the AU(s)/µBST(s) that can synchronize with the SU.

The Base Station ID Mask consists of 6 groups of up to 3 digits each, where the range of each group is 0 to 255. The first 3 groups form the mask for the Operator ID. The next 2 groups form the mask for the Cell ID, and the last group forms the mask for the Sector ID.

A change in the Base Station ID Mask is applied only after reset.

4.9.7.3.3 Phy Parameters

The SU Phy menu enables viewing/updating the following parameters:

4.9.7.3.3.1 Bandwidth (MHz)

The frequency bandwidth used by the radio. A change in the Bandwidth parameter will take effect only after resetting the SU.

The available options are:

1 - 1.75 MHz

2 - 3.5 MHz

3 - 5 MHz

4 - 7 MHz

5 - 10 MHz

A trial to configure a bandwidth that is not supported by the SU will be rejected.

4.9.7.3.3.2 Uplink (Tx) Frequency (MHz)

This parameter is not applicable to the current release. In future versions that will support both Standard and Advanced Si Operation Modes it will enable pre-configuring the Uplink Frequency to be used after switching to Standard mode.

The Uplink (Tx) Frequency is the frequency used in the uplink (from SU to AU). A change in the Uplink Frequency parameter will take effect only after resetting the SU.

The available values depend on the Bandwidth and on the available Frequency Bands in the Frequency Bands Group supported by the AU (see Section 4.7.5).

4.9.7.3.4 Multirate and ATPC Parameters

The Multirate and ATPC mechanism are controlled by the AU (except to the option to temporarily control them locally at the SU for testing purposes). The Show Multirate and ATPC Status and Parameters option enables viewing the current status of the applicable parameters. The Set Rates option can be used to set uplink and downlink rates per SU only when Multirate is disabled.

4.9.7.3.4.1 Show

The Show option enables viewing the current status of the following parameters:

- Uplink RSSI (dBm)
- Uplink SNR (dB)
- Uplink Rate
- Downlink RSSI (dBm)
- Downlink SNR (dB)
- Downlink Rate
- ATPC Support
- Tx Power (dBm)

4.9.7.3.4.2 Set Rates

The Set Rates option is available only when the Multirate algorithm is disabled in the AU (see Section 4.8.5.3.4), allowing to set the Uplink Current Rate and the Downlink Current Rate to any of the available values.

The defaults are the last rates used by the Multirate algorithm before it was disabled. For SUs that join the cell when the Multirate algorithm is disabled, the defaults are the applicable Basic Rates.

For the available Rate values, see Table 4-5.

4.9.7.3.5 Voice/Networking Gateways

The Voice/Networking Gateways option enables viewing details on the Voice/Networking Gateways connected to the SU. This is applicable only for Alvarion's Gateways supporting the DRAP protocol. For each Gateway, the following details are provided:

- Gateway Type
- IP Address
- VLAN ID
- Number Of Active Calls (applicable only for Voice Gateways)

The following gateways are currently available from Alvarion:

- IDU-NG-4D1W: A Networking Gateway that serves also as an SU IDU, supporting 4 data ports and 1 Wireless LAN port.
- VG-1D1V: A stand-alone (external) Voice Gateway, supporting 1 data port and 1 POTS port.
- VG-1D2V: A stand-alone (external) Voice Gateway, supporting 1 data port and 2 POTS ports.

4.9.7.3.6 Ethernet Port

The Ethernet Port menu enables configuration of the Ethernet port operation mode (speed and duplex).

4.9.7.3.6.1 Show

The Show option enables viewing the configured and actual operation modes:

- Current Mode: The current operation mode used by the SU.
- Configured Mode: The operation mode to be used by the SU after the next reset.
- Detected Mode: The actual operation mode. When the Current Mode is Auto Negotiation, the Detected Mode displays actual speed/duplex parameters used by the SU as a result of the auto negotiation process.

4.9.7.3.6.2 Update

Select the Update option to configure the **Ethernet Port Configuration** parameter. The available options are 10 Half, 10 Full, 100 Half, 100 Full and Auto Negotiation.

The default is Auto Negotiation.

4.9.7.3.7 Installer Password

The Installer Password option enables viewing the current Installer Password and configuring a new password. The Installer Password is used for accessing the SU's Monitor (Installer) program locally, using Telnet via the SU's Ethernet port.

The Installer Password consists of a string of up to 20 printable characters, case sensitive.

4.9.7.3.8 Bridging Parameters

The Bridging Parameters menu enables setting a limit on the maximum number of Ethernet devices behind the SU and configuring the aging time for devices in the SU's bridging table. The Bridging parameters are:

4.9.7.3.8.1 Enable/Disable Limit on Number of Supported Devices

If the Enable/Disable Limit on Number of Supported Devices parameter is set to Disable, the maximum number of supported devices is 512.

The default is Disable.

4.9.7.3.8.2 Maximum Number of Supported Devices

This parameter is applicable only when the Enable/Disable Limit on Number of Supported Devices parameter is set to Enable.

The available range is from 1 to 512 devices.

The default is 512.

4.9.7.3.8.3 Bridge Aging Time

The Bridge Aging Time sets the aging time for all addresses in the SU's Forwarding Data Base.

The available values are from 1 to 1440 minutes.

The default is 3 minutes.

4.9.7.3.9 License

The License menu is applicable only to L model CPE. It enables viewing the details of installed licenses and loading a new license (if a required license is available in the CPE Licenses Bank).

4.9.7.3.10 Best BST/AU

An SU that can communicate with more than one AU may become associated with the first AU it "finds", not necessarily the best choice in terms of quality of communication. Changes in Base Station deployment and subscriber density can accumulate to create substantial changes in SU performance. The quest for load sharing together with the desire to create best throughput conditions for the SU created the need for the Best AU feature, to enable an SU to connect to the best AU in its neighborhood.

When the Best BST/AU feature is enabled, the SU scans all AUs in a predefined range, in all frequencies (according to the frequencies defined in the Frequency Scanning menu as described in Section 4.9.7.3.11) and in all available antennas (according to the local definition in the SU, as indicated by the Antenna Selection parameter in the Show menu of the SU). Each of the AUs with which the SU can communicate (perform initial phase of network entry) is given a quality mark based on the quality of the signal at which it is received by the SU. At the end of the scanning period, the SU reaches a Best AU decision according to the information gathered. The AU with the highest quality mark is selected as the Best AU, and the SU will immediately try to associate with it at the relevant frequency.

The range used for scanning is defined by the Base Station ID parameters of the SU. The initial range can be limited by defining a preferred range of AUs, and selecting the best AU in the preferred range. If no AU is found in the preferred range, the SU will scan the entire range.

The Best BST/AU Parameters menu includes the following options:

4.9.7.3.10.1 Show

The Show option enables viewing the following:

- Best BST/AU Support
- Preferred BST/AU ID
- Preferred BST/AU ID Mask

- Selected BST/AU ID
- Selected Downlink (Rx) Frequency
- Best BST/AU Table, displaying for each AU with which the SU can communicate (including the selected AU) the following parameters:
  - BST/AU ID
  - Downlink (Rx) Frequency
  - SNR (dB)
  - Rx Antenna

4.9.7.3.10.2 Update

The Update option enables configuration of the following parameters (changes in Best BST/AU parameters take effect only after reset):

4.9.7.3.10.2.1Best BST/AU Support

The Best BST/AU Support parameter allows enabling of disabling the Best BST/AU feature in the SU.If the Best BST/AU Support feature is disabled, the SU will start scanning and select the first found AU.

4.9.7.3.10.2.2Preferred BST/AU ID and Preferred BST/AU ID Mask

These two parameters define the initial range for scanning in order to find the best AU. The SU will select the best AU within this range. If no AU is found within this range, the SU will continue searching in the entire range defined by the Base Station ID and Base Station ID Mask parameters.

The Preferred BST/AU ID and Preferred BST/AU ID Mask consist of 6 groups of up to 3 digits each, where the range of each group is 0 to 255. The first 3 groups form the base address/mask for the Operator ID. The next 2 groups form the base address/mask for the Cell ID, and the last group forms the base address/mask for the Sector ID.

4.9.7.3.11 Frequency Scanning

The Frequency Scanning menu enables viewing and updating the set of frequencies to be used during the scanning process. The Frequency Scanning parameters are Start Rx Frequency, End Rx Frequency, Scanning Main Step and Intermediate Step Mask. The set of frequencies to be scanned is defined as follows:

The “main” frequencies are defined by the Start Frequency and Main Step, using the formula F(N) =Start Frequency + N*Main Step (F(0) = Start Frequency, F(1) = Start Frequency + Main Step,...). End Frequency is the upper limit.

The Intermediate Step Mask can be used to define additional frequencies using a finer resolution. The Intermediate Step Mask includes up to 8 entries that include numbers from 1 to 8 (or none). The intermediate steps are defined as follows:

Table 4-6: Intermediate Step Mask

Number included in Mask	Effect on scanned frequencies set
None	Only Start Frequency + N*Main Step [F(1), F(2)....F(N)]
1	Start Frequency, Start Frequency + N*Main Step [F(0)F(1), F(2)....F(N)]
2	Start Frequency + N*Main Step + 125 KHz (Start + 125 KHz is scanned only if 1 is included in mask)
3	Start Frequency + N*Main Step + 250 KHz (Start + 250 KHz is scanned only if 1 is included in mask)
4	Start Frequency + N*Main Step + 375 KHz (Start + 375 KHz is scanned only if 1 is included in mask)
5	Start Frequency + N*Main Step + 500 KHz (Start + 500 KHz is scanned only if 1 is included in mask)
6	Start Frequency + N*Main Step + 625 KHz (Start + 625 KHz is scanned only if 1 is included in mask)
7	Start Frequency + N*Main Step + 750 KHz (Start + 750 KHz is scanned only if 1 is included in mask)
8	For a bandwidth of 3.5 MHz: Start Frequency + N*Main Step + 875 KHz (Start + 875 KHz is scanned only if 1 is included in mask) For a bandwidth of 5 MHz: Start Frequency + N*Main Step + 1250 KHz (Start + 1250 KHz is scanned only if 1 is included in mask)

For example, the Scan step Mask 1,2,5 means that the scanned frequencies are: Start Frequency, Start Frequency + 125 KHz, Start Frequency + 500 KHz, Start Frequency +N*Main Step, Start Frequency +N*Main Step + 125 KHz, Start Frequency +N*Main Step + 500 KHz (N=1, 2,...). End Frequency is the upper limit for the scanned frequencies).

The Frequency Scanning menu includes the following options:

4.9.7.3.11.1 Show

The Show option enables viewing the following:

- Start Rx Frequency

- End Rx Frequency
- Scanning Main Step
- Intermediate Step Mask (Configured)
- Intermediate Step Mask (Actual)
- Discrete Frequencies (or “No discrete frequency configured”): The discrete frequencies (if any) configured in the SU, to be used in the scanning process in addition to the frequencies defined by the Frequency Scanning parameters. Discrete Frequencies are configurable only locally at the SU.

4.9.7.3.11.2 Update

The Update menu enables configuration of the following parameters (changes in Frequency Scanning parameters take effect only after reset):

4.9.7.3.11.2.1Start Rx Frequency (MHz)

The lowest frequency in the range of frequencies to be scanned.

The available values depend on the frequency range defined by the Frequency Bands belonging to the applicable Frequency Bands Group (see Section 4.7.5)

4.9.7.3.11.2.2End Rx Frequency (MHz)

The highest frequency in the range of frequencies to be scanned.

The available values depend on the frequency range defined by the Frequency Bands belonging to the applicable Frequency Bands Group (see Section 4.7.5)

4.9.7.3.11.2.3Scanning Main Step (KHz)

The Main Scanning Step, that together with the Scan Step Mask define the frequencies to be scanned between the Start and End Rx Frequencies.

For a Bandwidth of 3.5 MHz, the range is from 125 KHz to 1750 KHz, in steps of 125 KHz.

For a Bandwidth of 5 MHz, the range is from 125 KHz to 5000 KHz, in steps of 125 KHz.

4.9.7.3.11.2.4Scan Step Mask

The Scan Step Mask includes up to 8 entries of numbers between 1 to 8, that defined the intermediate scanning steps as described above.

The highest step defined by the Scan Step Mask must be higher than the Scanning Main Step.

4.9.7.4 Performance Monitoring

The Performance Monitoring sub-menu provides the following options:

- Ports Counters
- Burst Error Rate Counters

4.9.7.4.1 SU Ports Counters

The SU Ports Counters menu enables viewing or resetting the Ethernet and Wireless ports counters. The information displayed for each counter is the accumulated number since the last time the counters were reset. The counters are reset each time the SU is reset, or upon activating the Reset Counters option.

The displayed counters include:

- **Ethernet Port Counters**
  - **Data Bytes Received**: The total number of data bytes received from the Ethernet link. Management frames and frames with errors are not included.
  - **Data Bytes Discarded on Rx**: The number of bytes discarded when a packet received from the Ethernet port is not forwarded to the Wireless port due to bridging or classification considerations.
  - **Data Bytes Transmitted**: The total number of data bytes transmitted to the Ethernet link. Management frames and frames with errors are not included.
  - **Data Bytes Discarded on Tx**: The number of bytes discarded when a packet received from the Wireless port is not forwarded to the Ethernet port due to bridging or VLAN considerations.
- **Wireless Port Counters**
  - **Data Bytes Received**: The total number of data bytes received from the Wireless link. Management frames and frames with errors are not included.
  - **Data Bytes Discarded on Rx**: The number of bytes in packets received from the Wireless link and discarded due to MAC protocol receive errors,

such as duplicate sequence number, wrong sequence number etc. (not CRC errors).

- **Data Bytes Transmitted**: The total number of data bytes transmitted to the Wireless link. MAC Management frames and frames with errors are not included.
- **Data Bytes Discarded on Tx**: The number of bytes in packets discarded due to congestion in the wireless medium.
- **ARQ Enabled Bytes Transmitted**: The number of bytes transmitted over BE and NRT connections. Applicable only if the ARQ mechanism in the AU is enabled.
- **Bytes Retransmitted**: The number of unacknowledged bytes that were retransmitted. Retransmissions are applicable only to BE and NRT connections, provided the ARQ mechanism in the AU is enabled.
- **Retransmission Rate (%)**: Retransmission Rate in percents is defined as: 100*(Bytes Retransmitted)/(ARQ Enabled Bytes Transmitted).

4.9.7.4.2 Burst Error Rate Counters

In the downlink, each burst uses a single rate and may include data intended for several SUs. In the uplink, each burst is from a different SU (also using a single rate).

The Burst Error rate Counters option enables viewing or resetting the Burst Error Rate counters. The information displayed for each rate in uplink and downlink is the accumulated number since the last time the counters were reset. For each direction (uplink/downlink) the displayed information includes the following statistics for each rate:

- Total Burst
- Error Bursts
- Error Rate

The counters are reset each time the SU is reset, or upon activating the Reset option.

4.9.7.5 Show MAC Addresses Behind SU

Select this option to view a list of the MAC Addresses of the devices behind the SU. If VLAN behind the SU is used, the VLAN ID used by each device is displayed next to its MAC Address.

4.9.7.6 Delete

This option enables deleting the selected SU from the database.

4.9.8 Add New SU

Select the Add New SU option to add a new SU to the database. The Add New SU sub-menu includes the following parameters:

- SU MAC Address
- SW File Name: The SW File to be used by the SU. Should be either a File Name known to exist in the SU or an SU SW File Name in the NPU.
- Operation: The action to be performed with the specified SW File after the SU connects to the AU (None, Download, Run from Shadow or Set as Main).

A new SU that attempts to communicate with the base station when the base station operates in Advanced Mode will be registered only if its MAC address exists in the database.

4.9.9 Clear All Configured SU SW Files

Select this SU to clear (delete) the Configured SW File in all Permanent SUs served by the Base Station.

4.10 Services Menu

4.10.1 Introduction to Services

4.10.1.1 Services, Subscribers and Service Profiles

A Service is a virtual connection between a Subscriber's application and the Network Resource. The Network Resource could be Internet, Content Provider, Corporate Network, etc.

The Services are implemented as IEEE 802.16 connections within the wireless domain. Each Service can include up to 4 uplink and 4 downlink connections. Implementation within the provider's backbone domain depends on the specific backbone network.

A Subscriber is an entity that may be associated with any number of devices connected to any number of SUs. Each Service associates a certain Service Profile with Subscriber's device(s) behind a specific SU.

NOTE

The Subscriber entity is not applicable when Services are provisioned using a RADIUS server.

The Service Profile's properties depend on the Service Type. All data Services have the following properties:

- VLAN ID based Classification: Each Service can be associated with up to 16 VLAN IDs, enabling creation of VLANs within the wireless domain and differentiation of services to different end-users behind the same SU based on VLAN ID classification.

- Quality of Service (QoS) and Priority based Classification: Up to 4 uplink and 4 downlink QoS profiles can be assigned to each Service. The data will be mapped onto these connections by either IEEE 802.1p or DSCP priority tags. This will lead to creation of the corresponding number of Uplink and Downlink connections supporting differentiated services to up to 4 applications based on either IEEE 802.1p or DSCP prioritization schemes. In cases where prioritization is not used, a single pair of uplink/downlink connections is created.

- Forwarding Rules: A Forwarding Rule is assigned to each Service, defining various features that define the handling of certain message types in the

wireless domain. These may include Unicast and Multicast Forwarding rules, QoS Profile for Multicasts and Unknown Address Forwarding Policy. The available features depend on the Service Type. The data may be switched only between the Services that share the same Forwarding Rule. In all other respects the service functions as a standard Bridge.

- Aggregation: Several Services in the Wireless Domain may be aggregated into a single Virtual Private Link (VPL) in the backbone domain.
- Priority Marking: Ethernet frames transmitted to the backbone may be marked with a configurable priority (DSCP or IEEE 802.1p), enabling the upstream network to handle the traffic accordingly.
- Auto-configuration: The Ethernet Addresses of the Subscribers' PCs are automatically learnt just as in a standard Bridge. For each Ethernet Address it also learns the VLAN behind the SU it belongs to.

Currently, the following Service types are supported:

- L2 (layer 2) Data Service
- PPPoE Data Service
- Voice Service

4.10.1.2 Service Types

4.10.1.2.1 L2 Service

L2 (Layer 2) service transports Layer 2 (Ethernet) frames between the subscriber's site and the Network Resource located behind the provider's backbone and/or between the subscriber's sites. It is assumed that the backbone either supports encapsulation of the Layer 2 frames (e.g. over ATM) or routes the frames according to the applicable Layer 3 protocol, which could be different from IP. The Network Resource is assumed to be a corporate network.

NOTE

An L2 Service supports also DRAP-based Voice Service, as described in the next page.

4.10.1.2.2 PPPoE Service

PPPoE (Point-to-Point Protocol over Ethernet) Access service provides connectivity between a PPPoE enabled devices at the subscriber's site and a PPPoE aware

Access Concentrator behind the Base Station. The frames are forwarded only between the Subscribers' PCs and the PPPoE Access Concentrator. Frames that are not PPPoE Ethertype are discarded. In the uplink, frames are never relayed but only forwarded to the Access Concentrator. In the downlink, broadcasts are allowed only in cases of unknown addresses.

4.10.1.2.3 Voice Service

The Voice over IP (VoIP) service provides telephony services through an external Voice Gateway connected to the Subscriber Unit's data port. The VoIP service is designed for Alvarion's Voice Gateways, using the proprietary DRAP signaling protocol to identify VoIP sessions and to verify optimal handling of these sessions. Upon provisioning of such a service, the system automatically handles Signaling and RTP connections establishment, including QoS issues.

NOTE

The DRAP-based Voice Service is also available when an L2 Service is provisioned.

DRAP (Dynamic Resources Allocation Protocol) is a protocol between the Gateway (installed behind the Subscriber Unit) and the base station. The protocol provides an auto-discovery mechanism for the Gateway, so that no specific configuration is needed and the Gateway can automatically locate and register with the base station. The protocol uses a few simple messages enabling a Voice Gateway to request resources when calls are made, and the base station to dynamically allocate them.

Using the DRAP solution has the following advantages:

- Maintain telephony toll quality over the wireless network - dynamically allocate Continuous Grant (CG) connections for active calls, maintaining the QoS and low jitter needed for toll-quality voice services.
- Allocate CG bandwidth only for the duration of the call - the air resources are allocated and released according to the DRAP messages, which are based on the VoIP signaling. This dynamic allocation ensures efficient use of the air resources.
- Prevent callers from placing calls if a sector is overloaded - the operator can control and limit the maximum number of concurrent calls per wireless sector and per end user voice gateway. Thus, the operator has complete control of its network and the resources in it.

- Automatic support of Codec changing in a VoIP call - the DRAP messages update the BreezeMAX equipment on any Codec change or subsequent bandwidth allocation change during the call, hence the exact required bandwidth is always provided. This is essential in fax transmissions where the call might begin with one Codec and switch to another to accommodate the fax transmission.

- VoIP stack is always in synch with the wireless transport - as the DRAP is integrated into the VoIP stack all calls are terminated according to the VoIP standard. Even if no resources are available, the voice gateway receives an appropriate message from the BreezeMAX system and sends the required signaling message according to the VoIP standard used.

4.10.1.3 Supporting Generic (3rd Party) VoIP Services

When using VoIP devices that do not support the DRAP protocol, the required service can be provided through a Data (L2) service with a CG QoS (see Section 4.10.4.7) that is defined in accordance with the estimated bandwidth required for the service. The required bandwidth depends on several parameters, such as codec type, sample rate and T.38 Fax Relay support. The service parameters depend also on the marking features of the VoIP equipment (the ability to use either DSCP or 802.1p to distinguish between RTP, RTCP and VoIP Signaling, and Data traffic).

The system includes several pre-configured Service Profiles for commonly used VoIP applications.

For details on the pre-configured profiles, refer to Section 4.10.8. For details on defining Service Profiles for generic VoIP devices, refer to Appendix B.

4.10.1.4 Global and Local Profiles

Global Profiles (Service Profiles and their components - Forwarding Rules, Priority Classifiers and QoS Profiles) are centrally managed profiles that are distributed to Base Stations as XML files via TFTP. Global profiles can be changed only by loading a new XML file; they cannot be created, modified or deleted by either the Monitor program or SNMP. This concept provides fully centralized control over these profiles, and ensures that the same profiles with identical content exist in all Base Stations (assuming that distribution is performed properly).

Local Profiles are intended primarily for special cases when there is a need to define a Service Profile in one or several Base Stations using either the Monitor Program or SNMP. There is no way to guarantee that Local profiles with the same name in two or more Base Stations will have identical content. Local profiles can be added, modified or deleted using either the Monitor program or SNMP.

Changes in Global profiles (add, update or delete) are applied by loading a new XML file. A newly loaded XML file replaces completely all the Global profiles in the database.

NOTE

If a Global Service Profile component (Forwarding Rule, Priority Classifier, QoS Profile) is in use by a Local Service Profile (or component), it will not be affected (deleted or updated) by loading a new XML file.This is an undesired situation, as it may lead to a situation where there is no full synchronization of the Global profiles database among all Base Stations.

To avoid this situation, do not use Global components (Forwarding Rule, Priority Classifier, QoS Profile) in Local Service Profiles.

4.10.1.5 Authentication and Service Provisioning

The Authentication and Service Provisioning process is affected by the Base Station's Service Mode (Advanced or Quick) and by specific SU Status (Permanent or Temporary).

A Permanent SU (an SU that is defined as such in the database) is provisioned with the "permanent" Service(s) defined for it in the database (if any). The Services are provisioned based on the SU's MAC Address.

A Temporary SU (not defined as Permanent in the database) will be authenticated and provisioned with the Service(s) defined for it by the RADIUS Authentication server. The authentication and service provisioning are based on the SU Name (User Name) and User Password. The SU will be added to the database as a Temporary SU.

If rejected by the RADIUS Authentication server (or RADIUS Authentication server is not available), then the service provisioning depends on Service Mode:

In Advanced Service Mode, the SU will be rejected (no services).

In Quick Service Mode, the SU will be able to use default services based on the Default Service Profile(s), provided it uses the "quick" User Password "quickynikinyoky". It is possible to define up to two Default Service Profiles: one for PPPoE services and one for L2 or Voice services (note that L2 service can support also Voice services). The SU will be added to the database as a Temporary SU.

The quickynikinyoky User Password will be sent by the SU in the following cases:

A quickynikinyoky is the User Password configured in the SU

B A new SU with a null User Name and User Password: The SU will send its MAC Address as User Name with User Password quickynikinyoky. In this case, the

SU may receive specific services from the RADIUS Authentication server based on these credentials.

C Null (blank) User Password (non-null User Name)

Quick Mode is the recommended Service Mode. RADIUS Authorization and Accounting servers (may be implemented in the same server) are required for proper service provisioning.

A Base Station will reject an SU if its name (User Name) is identical to that of another SU that is already served by the Base Station However, several SUs connected to different Base Stations may be authenticated and provisioned with services even if they use the same User Name and User Password. The maximum number of duplicate SUs using the same User Name and User Password that may be authenticated by the Authentication server (Duplicate Sessions) is configured in the RADIUS Accounting server.

The service provisioning information sent by the RADIUS Authentication server to the Base Station includes for each service (up to a maximum of 5 services) the name of the Service Profile and VLAN parameters. In addition, the authentication message includes also the Session Timeout and Termination Action. If the Termination Action is Default, the Session (services to the SU) will be terminated. If the Termination Action is RADIUS-request, the Base Station will try to re-authenticate the user. If the service configuration in the Authentication server has been changed, the services provisioned to the SU (if re-authenticated) will be updated accordingly.

4.10.1.6 Using VLANs and VPLs

VLANs can be used for creating within the BreezeMAX network virtual groups of multiple end-users (stations) belonging to the same organization (Subscriber). They may also be used to differentiate between different end-users (stations) connected to the same SU.

In the backbone, VPL ID (Virtual Private Link ID) is used. VPL is a virtual connection between two points on the network, such as a base station and a service provider or corporate network, identified by the VPL ID, with functionality that is similar to VLAN ID (VLAN on the backbone network). Typically, it is used to separate between different traffic types (e.g. Data and Voice), or traffic to/from different ISPs or different corporate networks.

If the VPL ID is None (No VPL ID) and VLAN Transparency Mode is Off, frames arriving from the infrastructure side with a VLAN ID tag will be discarded. Tagged frames arriving from the wireless domain will be forwarded without a VLAN tag, unless 802.1p Priority Marking is used. If 802.1p Priority Marking is used, tagged frames will be forwarded with VPL ID = 0 and the defined Priority Marking Value.

If the VPL ID is other than None (applicable only if VLAN Transparency Mode is Off), all untagged frames forwarded to the network will be tagged with the VPL ID. The VLAN ID in tagged frames arriving from the wireless network will be replaced by the VPL ID.

The guidelines that should be followed when defining VPL ID are:

- Several Service Profiles may share the same VPL ID. However, the following rules must be met:
  - Any number of L2 and/or VoIP Service Profiles may share the same VPL ID, provided they all use the same Forwarding Rule.
  - Any number of PPPoE Service Profiles may share the same VPL ID, provided they all use the same Forwarding Rule.
  - Any number of L2, VoIP and PPPoE Service Profiles may share the same VPL ID, provided that all L2/Voice Service Profiles use the same Forwarding Rule A, and all PPPoE Service Profiles use the same Forwarding Rule B, where A and B are different.

The VLAN Transparency Mode defines the method of transferring packets to the operator's upstream network. When set to On, data packets sent from the Base Station to the backbone will be transferred transparently. The VPL ID parameter is not applicable to Service Profiles with VLAN Transparency Mode On.

- For tagged packets, the VPL ID will be their VLAN tag.
- For untagged packets, the VPL ID will be None.

For packets received from the network, the forwarding decision will be according to the packet's VPL ID. If the VPL ID is unknown (either None or not included in the list of VPL IDs defined for any of the existing, non-transparent Service Profiles), the system will assume this is a transparent VLAN packet (if at least one transparent Service is defined) and transfer it with the original VLAN tag (or untagged if there is no VLAN tag).

For transparent services, VLAN Classification Mode can be set to On to enable downlink classification based on both the MAC Address and VLAN ID, to support applications with multiple VLAN IDs per a single MAC address. All Services assigned to the same SU must be configured with the same VLAN Classification Mode (Either On or Off). If VLAN Classification Mode is On, only a single VLAN ID can be defined for the Service. This means that the allowed combinations are:

- Hybrid VLAN Mode is Off and the VLAN List includes a single VLAN ID.
- Hybrid VLAN Mode is On and the VLAN List is empty.

For transparent services it is also possible to configure an Access VLAN to be used with untagged packets received on the Ethernet port of the SU. This parameter is applicable only for a transparent service with Hybrid Mode set to On, or a transparent service with Hybrid Mode set to Off and an empty VLAN list.

A maximum of one Access VLAN can be defined per SU.

Hybrid VLAN Mode of operation enables classification of both tagged and untagged packets or untagged packets only, according to the following rules:

Table 4-7: Hybrid VLAN Mode

Hybrid VLAN Mode	VLAN List	Forwarded Packets
Off	Exists	Only packets tagged with a VLAN ID that exists in the VLAN List. VLAN List can include up to 16 entries.
	Empty	All (both untagged and tagged with any VLAN ID)
On	Exists	Untagged packets, and packets tagged with a VLAN ID that exists in the VLAN List. VLAN List can include up to 15 entries.
	Empty	Only untagged frames.

The guidelines that should be followed when defining VLAN IDs and related parameters are:

- A specific VLAN ID behind a certain SU can be associated only with a single Service of a certain Service Type. It is not possible to define two Services of the same Service Type for the same SU and VLAN ID. However, the same SU and VLAN ID can be associated with two Services of different Service Types, excluding the combination of L2 Service and Voice Service.
- For each Service Type, a maximum of one Service that enables forwarding of untagged packets can be assigned to an SU. Forwarding of untagged packets is supported when either Hybrid VLAN Mode is On, or Hybrid VLAN Mode is Off and the VLAN List is empty. It is not possible to define for the same SU two Services of the same Service Type that enable forwarding of untagged packets. However, the same SU and untagged packets can be associated with two Services of different Service Types, excluding the combination of L2 Service and Voice Service.

- The maximum total number of VLAN IDs behind the same SU is 16 (15 when there is a Service with Hybrid VLAN Mode On is assigned to the SU).

- The combination of VLAN Transparency Service On, Hybrid VLAN Mode Off and an empty VLAN List means that all packets are forwarded. This combination should be used only if the Service Provider can ensure that there will not be conflicts between VLAN IDs used by devices behind the SU and existing VPL IDs.

- To avoid conflicts, a transparent Service Profile cannot be assigned to a Service if the Service's VLAN ID list includes a VLAN ID that is equal to any of the already assigned VPL IDs.

- The combination VLAN Transparency Mode On, Hybrid VLAN Mode On and an empty VLAN List means that only untagged frames should be forwarded. Such a Service cannot be assigned if there is an assigned non-transparent Service with VPL ID = None.

4.10.2 Introduction to Filtering Features

The Filtering features allow a network operator to control the traffic in the system by forwarding or discarding packets according to a set of rules based on multiple allow/deny criteria. This provides both improved network security and better utilization of the wireless medium.

The filtering is done at the base station, controlling the traffic between the network and the wireless link. The filtering features enable:

- Filtering packets arriving from the network interface (From Network Filtering), using a set of either Layer 2 or Layer 3/Layer 4 Filtering Rules.

- Filtering packets arriving from the wireless link (From Wireless Filtering), using a set of either Layer 2 or Layer 3/Layer 4 Filtering Rules.

- Discarding packets to/from specific MAC addresses (MAC Address Deny List). This is applicable to MAC Addresses behind SUs.

The following figure describes the filtering functionality.

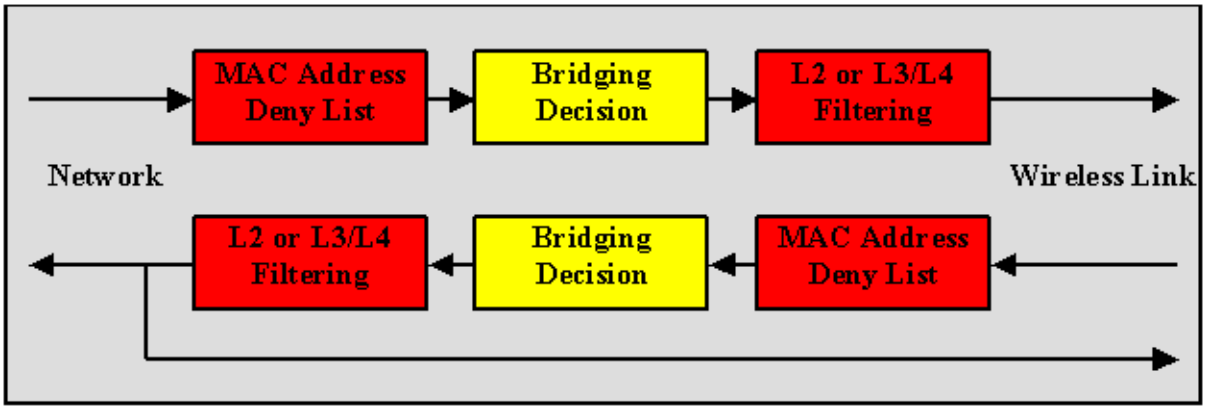

Figure 4-2: Filtering Functionality

The filtering definition process includes the following steps:

1. Defining list(s) of Filtering Rules. Each Filtering Rule defines a combination of values for certain packet fields. Filtering Rules can be of 2 types: Layer 2 Filtering Rules (using fields of the Ethernet frame) and Layer 3/Layer 4 Filtering Rules (using fields of the IP and/or UDP/TCP headers).
2. Associating each Interface (From Network, From Wireless Link) with a set of either Layer 2 or Layer 3/Layer 4 filters from the relevant Filtering Rules lists, and defining the action to be taken upon receiving a packet that matches any of the selected Filtering Rules: Allow (forward) or Deny (discard).

4.10.3 Common Operations in Services Menu

Except for the General submenu, all submenus available in the Services menu enable viewing, editing, deleting and adding applicable entities, such as Subscribers, Services, Service Profiles, etc.

Some or all of the following options are available in all submenus of the Services menu:

4.10.3.1 Show All

Select this option to see the current details of all entities in the applicable submenu (Subscribers, Services, etc.).

4.10.3.2 Show by

This option enables selecting an entity by a specific identifier such as Name or MAC Address. Select this option and enter the appropriate parameter's value to access the menu for a selected entity. This will enable you to choose from the following options:

- Show: Select this option to view the details of the selected entity.
- Update: Select this option to edit the details of the selected entity.
- Delete: Select this option to remove the selected entity from the database.

4.10.3.3 Show List

Select this option to view all defined entities in the applicable submenu sorted by the entity type ID (Subscriber ID, Service ID, etc.). The entity ID is an identifier attached automatically to each new entity. You can select a specific entity by its ID. This will open the Selected Entity menu with the Show, Update and Delete options described above.

4.10.3.4 Select

Select this option to select an entity by its Name. This will open the Selected Entity menu with the Show, Update and Delete options described above.

4.10.3.5 Add

Select this option to add a new entity to the database.

4.10.4 The Services Menu

The Services menu includes the following options:

- General
- Subscribers
- Services
- Service Profile
- Forwarding Rules
- Priority Classifiers
- QoS Profiles
- Filtering Rules
- Interface Filtering

- MAC Addresses Deny List
- XML File Parsing Errors

4.10.4.1 General

The General menu includes general service parameters. It includes the following options:

4.10.4.1.1 Show

Select this option to view the current values/options of the General parameters.

4.10.4.1.2 Update

Select this option to update any of the General parameters. The General parameters are:

4.10.4.1.2.1 Service Mode

The Service Mode of the Base Station.

The available options are:

1 - Advanced

2 - Quick

The default Service Mode is Quick (2).

For more information on Service Modes refer to Section 4.10.1.5.

4.10.4.1.2.2 Default L2/Voice Service Profile

The default L2 or Voice Service Profile to be used by temporary SUs in Quick Mode.

Available profiles - any of the L2 or Voice Service Profiles existing in the database.

4.10.4.1.2.3 Default PPPoE Service Profile

The default PPPoE Service Profile to be used by temporary SUs in Quick Mode.

Available profiles - any of the PPPoE Service Profiles existing in the database.

4.10.4.2 Subscribers

The Subscribers menu enables defining new Subscribers, viewing or editing details of previously defined Subscribers and removing Subscribers from the database.

The Subscriber entity is applicable only to Permanent Services (services that are defined in the NPU's database and are provisioned to Permanent SUs).

The Subscribers database in the NPU can hold up to 1024 Subscribers.

The configurable Subscriber's parameters are:

4.10.4.2.1 Subscriber Name

This is the name of the subscriber, which must be unique for the entire network.

A Subscriber Name consists of up to 32 printable characters.

4.10.4.2.2 First Name

An optional parameter for information purposes.

A First Name consists of up to 50 printable characters.

4.10.4.2.3 Last Name

An optional parameter for information purposes.

A Last Name consists of up to 50 printable characters.

4.10.4.2.4 Description

An optional parameter for information purposes.

A Description consists of up to 50 printable characters.

4.10.4.2.5 Admin Status

The administrative status of the Subscriber can be either Enabled or Disabled. Select Disabled to disable all services to the Subscriber.

4.10.4.3 Services

There are two types of Services:

A “permanent” Service is defined locally in the database of the Base Station and it defines a Service to be provisioned to a Permanent SU.

A “temporary” Service includes all the attributes of a Service provisioned to a Temporary SU that are received from a RADIUS server. A “temporary” Service is managed by the RADIUS server and cannot be updated or deleted locally using either the Monitor program or SNMP.

The Services menu enables viewing all Services, defining new permanent Services, editing details of previously defined permanent Services and removing permanent Services from the database.

NOTE

The proper process of removing a Service is:

1. Disable the Service (set the Admin Status to Disable)
2. Delete the Service.

If the Service is not disabled prior to being the deleted, VLAN ID included in the VLAN List of the deleted Service may still be used by other Services to the same SU that use the same Forwarding Rule as the deleted Service.

The Services database in the NPU (Base Station) can hold up to 4095 Services.

The Services menu also enables viewing and resetting the Service counters.

4.10.4.3.1 Service Parameters

The Service's parameters are:

4.10.4.3.1.1 Name

A Service Name consists of up to 32 printable characters.

A “temporary” Service (received from a RADIUS server) is given a default name of *<SU MAC Address>#<Number>*.

4.10.4.3.1.2 Subscriber Name

The Subscriber to which the Service is allocated.

The Subscriber Name must be that of a Subscriber that exists in the database.

The Subscriber Name is not applicable to a “temporary” Service (received from a RADIUS server).

4.10.4.3.1.3 Service Profile Name

The Service Profile to be used in the Service.

The Service Profile Name must be that of a Service that exists in the database.

4.10.4.3.1.4 SU MAC Address

The MAC Address of the SU associated with the Service.

The SU MAC Address must be that of a Permanent SU that exists in the database.

The MAC Address can be changed (in Update option) only if the Admin status of the Service is set to Disabled.

4.10.4.3.1.5 VLAN List

A list of VLAN IDs listing the VLAN IDs behind the SU associated with the applicable Subscriber.

The list includes VLAN IDs, each one in the range of 0 to 4094, separated by commas. Select null (empty string) for No VLAN. The VLAN List is not displayed in Show menus if the list is empty.

When Hybrid VLAN Mode is Off, the VLAN List can include up to 16 VLAN IDs. When Hybrid VLAN Mode is On, the VLAN List can include up to 15 VLAN IDs (the 16th entry is reserved for No VLAN).

The maximum total number of VLAN IDs behind a single SU is 16. (15 when there is a Service with Hybrid VLAN Mode On is assigned to the SU).

Refer to Section 4.10.1.6 for guidelines regarding VLAN ID configuration.

4.10.4.3.1.6 Hybrid VLAN Mode

Hybrid VLAN Mode of operation enables classification of both tagged and untagged packets or untagged packets only, according to the following rules:

Table 4-8: Hybrid VLAN Mode

Hybrid VLAN Mode	VLAN List	Forwarded Packets
Off	Exists	Only packets tagged with a VLAN ID that exists in the VLAN List. VLAN List can include up to 16 entries.
	Empty	All (both untagged and tagged with any VLAN ID)
On	Exists	Untagged packets, and packets tagged with a VLAN ID that exists in the VLAN List. VLAN List can include up to 15 entries.
	Empty	Only untagged frames.

Note that for each Service Type, a maximum of one Service that enables forwarding of untagged packets can be assigned to an SU. Forwarding of untagged packets is supported when either Hybrid VLAN Mode is On, or Hybrid VLAN Mode is Off and the VLAN List is empty. It is not possible to define for the same SU two Services of the same Service Type that enable forwarding of untagged packets. However, the same SU and untagged packets can be associated with two Services of different Service Types, excluding the combination of L2 Service and Voice Service.

4.10.4.3.1.7 VLAN Classification Mode

The VLAN Classification feature enables using VLAN ID (in addition to destination MAC address) for classification of transparent service downlink traffic before transmission to the destination MAC address. The VLAN Classification feature supports applications where multiple VLANs are associated with a single MAC address, allowing to assign different services to different VLANs.

VLAN Classification Mode can be set to On only if the following conditions are met:

- The VLAN Transparency Mode of the applicable Service Profile is set to On.
- A single VLAN ID is defined for the Service. This means that the allowed combinations are:
  - Hybrid VLAN Mode is Off and the VLAN List includes a single VLAN ID.
  - Hybrid VLAN Mode is On and the VLAN List is empty.
- All Services assigned to the same SU must be configured with the same VLAN Classification Mode (Either On or Off).

4.10.4.3.1.8 Access VLAN

The Access VLAN parameter enables defining a VLAN ID to be used with untagged packets received on the Ethernet port of the SU. This parameter is applicable only for a transparent service (VLAN Transparency Mode is On) with Hybrid Mode set to On, or a transparent service with Hybrid Mode set to Off and an empty VLAN list.

A tag with the defined Access VLAN will be added by the NPU to untagged packets in the uplink. The tag will be removed by the NPU from packets in the downlink. For a multicast connection, the NPU will send in addition to the VLAN list the single Access VLAN. The SU will be responsible to remove the Access VLAN if it is received on a multicast connection.

A maximum of one Access VLAN can be defined per SU.

The range is from 1 to 4094 or null for no Access VLAN.

4.10.4.3.1.9 Admin Status

The administrative status of the Service can be either Enabled or Disabled. Select Disabled to disable the Service.

4.10.4.3.1.10 Operation Status

A read-only display of the operational status that is available in the Show menus only. Up means that the Service is currently in use.

4.10.4.3.2 Performance

The Performance sub-menu enables viewing and resetting the connections' counters of the Service. For each connection in each direction the following information is displayed:

- Connection ID and direction

- Connection Type: BE, NRT, RT or CG.
- QoS Profile Parameters: The values of the relevant QoS Profile's parameters.
- Bytes Submitted: The number of bytes submitted by upper layers to this connection.
- Bytes Transmitted: The number of bytes transmitted to the wireless port through this connection, including retransmissions.
- Bytes Retransmitted: The number of bytes retransmitted to the wireless port through this connection.
- Bytes Dropped: The number of bytes dropped from this connection due to congestion in the wireless link. (identical to Bytes Discarded).
- Bytes Discarded: The number of bytes discarded from this connection due to congestion in the wireless link. (identical to Bytes Dropped).
- Packets Submitted: The number of packets submitted by upper layers to this connection.
- Packets Transmitted: The number of packets transmitted to the wireless port through this connection, excluding retransmissions.
- Packets Dropped: The number of packets dropped from this connection due to congestion in the wireless link. (identical to Packets Discarded).
- Packets Discarded: The number of packets discarded from this connection due to congestion in the wireless link. (identical to Packets Dropped).
- Average Delay: The average packet delay in milliseconds, measured for this connection over the last 15 seconds. The value is updated every 15 seconds.
- Delay Variance: The variance (the standard deviation squared) of the packet delay, in milliseconds squared, measured for this connection over the last 15 seconds. The value is updated every 15 seconds.
- Maximum Delay: The maximum packet delay in milliseconds, measured for this connection over the last 15 seconds. The value is updated every 15 seconds.

- Data Loss Indicator (%): The percentage of dropped packets, out of the total demand, measured for this connection over the last 15 seconds. The value is updated every 15 seconds.

  DLI (%) = 100 * (Packets Dropped) / (Packets Submitted)

- CIR Utilization (%): The CIR utilization measured for an RT or NRT connection over the last 15 seconds. Not applicable for BE and CG connections.

  k = 100 x (the minimum between bytes transferred and CIR)/CIR is calculated for each 1 second interval. CIR Utilization equals the average of k over the last 15 seconds, and may vary from 0 to 100. The value is updated every 15 seconds.

- EIR Utilization (%): Excess Information Rate utilization measured for a BE or NRT connection over the last 15 seconds. Not applicable for RT and CG connections.

  k=100 x (bytes transferred-CIR)/(MIR-CIR) is calculated for each 1 second interval. In BE CIR = 0. The EIR Utilization equals the average of k over the last 15 seconds, and may range from 0 to 100. The value is updated every 15 seconds.

- Average Throughput (bits/s): The average throughput, in bits/second, measured for this connection over the last 15 seconds. The value is updated every 15 seconds.

4.10.4.4 Service Profiles

Each Service Profile defines the properties of the defined service. Each Service Profile is associated with specific Forwarding Rule and Priority Classifier (Priority Classifiers are not applicable to Voice Service Profiles).

The Service Profile menu enables viewing all Local and Global Service Profiles in the database, defining new Service Profiles (that will be added to the database as a Local Service Profile), editing details of previously defined Local Service Profiles and removing Local Service Profiles from the database.

The Service Profiles database can hold up to 1024 Service Profiles.

The Service Profile's parameters are:

4.10.4.4.1 Service Profile Name

A Service Profile Name consists of up to 32 printable characters.

4.10.4.4.2 Service Type

The Service Type of the Service Profile. The Service Type parameter is configurable only when defining a new Service Profile (Add). It is not changeable.

The currently available Service Type options are:

1 - L2

2 - PPPoE

3 - Voice

For more details refer to Section 4.10.1.2.

4.10.4.4.3 VLAN Transparency Mode

The VLAN Transparency Mode defines the method of transferring packets to the operator's upstream network.

When set to On, data packets sent from the Base Station to the backbone will be transferred transparently. The VPL ID parameter is not applicable to Service Profiles with VLAN Transparency Mode On.

Also the Forwarding Rule selection parameter is not applicable to transparent Service Profiles. All transparent Service Profiles share a single pre-configured Forwarding Rule, and a pre-configured QoS Profile for multicasts. For details on these profiles refer to Table 4-21 and Table 4-22. The pre-configured Transparent Forwarding Rule can be modified but not deleted.

- For tagged packets, the VPL ID will be their VLAN tag.
- For untagged packets, the VPL ID will be None.

For packets received from the network, the forwarding decision will be according to the packet's VPL ID. If the VPL ID is unknown (either None or not included in the list of VPL IDs defined for any of the existing, non-transparent Service Profiles), the system will assume this is a transparent VLAN packet (if at least one transparent Service is defined) and transfer it with the original VLAN tag (or untagged if there is no VLAN tag).

NOTE

The combination of VLAN Transparency Service On, Hybrid VLAN Mode Off and an empty VLAN List means that all packets are forwarded. This combination should be used only if the Service Provider can ensure that there will not be conflicts between VLAN IDs used by devices behind the SU and existing VPL IDs.

When set to Off, data packets sent from the Base Station to the backbone will be transferred with a VLAN tag according to the VPL ID. The VLAN ID in tagged frames arriving from the wireless network will be replaced by the VPL ID. For packets received from the network, the forwarding decision will be according to the Forwarding Rule defined in the Service Profile with a matching VPL ID.

To avoid conflicts, a transparent Service Profile cannot be assigned to a Service if the Service's VLAN ID list includes a VLAN ID that is equal to any of the already assigned VPL IDs.

NOTE

The combination VLAN Transparency Mode On, Hybrid VLAN Mode On and an empty VLAN List means that only untagged frames should be forwarded. Such a Service cannot be assigned if there is an assigned non-transparent Service with VPL ID = None.

4.10.4.4.4 VPL ID

A Virtual Private Link ID to be used in the backbone behind the Base Station. The VPL ID parameter is applicable only to Service Profiles with VLAN Transparency Mode Off.

To avoid conflicts, it is not allowed to define a VPL ID that is identical to any of the VLAN IDs in the already assigned transparent Services (Services using a Service Profile with VLAN Transparency Mode On).

Several Service Profiles may share the same VPL ID. However, the following rules must be met:

- Any number of L2 and/or VoIP Service Profiles may share the same VPL ID, provided they all use the same Forwarding Rule.
- Any number of PPPoE Service Profiles may share the same VPL ID, provided they all use the same Forwarding Rule.
- Any number of L2, VoIP and PPPoE Service Profiles may share the same VPL ID, provided that all L2/Voice Service Profiles use the same Forwarding Rule A, and all PPPoE Service Profiles use the same Forwarding Rule B, where A and B are different.

Available values are in the range of 0 to 4094 or null (empty string) for No VPL ID. A value of 4095 is displayed for No VPL ID.

4.10.4.4.5 Priority Marking Mode

In some cases, the network operator may want to use the BreezeMAX system for marking QoS classes, in order to provide network-wide QoS and enable the

upstream network to handle the traffic accordingly. Within the BreezeMAX system, frames can be classified to QoS classes using Priority Classifiers, based on either a DSCP header or 802,1p tag. This applies only in cases where an external networking device marks the applicable fields. BreezeMAX also enables marking data transmitted to the backbone network with either DSCP or 802.1p values, where the marking is done per Service Profile. This marking overrides marking performed by external devices behind the SU. Typically, Priority Marking by the NPU will be used in the following cases:

- The external networking equipment behind the SU does not use priority marking.
- The service provider does not trust the priority marking defined by the user's equipment.
- The service provider uses a priority marking type (DSCP or 802.1p) that differs from the one used by the user's networking equipment.

The system supports three marking modes:

1. **Transparent Marking Mode (No Priority Marking):** In this case, the system should forward the frames to the uplink network without any changes.

   If 802.1p classification is used at the SU, the frames will be transmitted to the operator's network according to the following rules:

   - If VLAN Transparency Mode is Off, the frames will be forwarded with their original 802.1p value and the configured VPL ID. If no VPL ID is configured (VPL ID = Null), the 802.1p tags will not be forwarded.
   - If VLAN Transparency Mode is On, the frames will be forwarded without any change (with the original 802.1p value and VLAN ID, if exists).

   For DSCP classification at the SU:

   - If the VPL ID is configured (VLAN Transparency Mode Off), the NPU adds an 802.1Q header with the configured VPL ID and 802.1p=0.
   - If VLAN Transparency Mode is On, The NPU adds a 802.1Q header with the original VLAN ID (if exists).

   Note that there may be a disparity between the DSCP values and the default 802.1p = 0 value.

2 **802.1p Marking Mode:**

- If VLAN Transparency Mode is Off, all frames are marked with the configured VPL ID and the 802.1p Marking Value. If no VPL ID is configured (VPL ID = None), the 802.1Q header will include a VLAN ID = 0.
- If VLAN Transparency Mode is On, all frames are marked with the original VLAN ID and the 802.1p Marking Value.

NOTE

If the Priority Marking Value is set to 0, untagged packets (without VLAN ID) will be forwarded without any change. This is applicable to transparent services and to to non-transparent services with no VPL ID.

- If 802.1p classification is used at the SU, the original 802.1p tags are replaced by the configured 802.1p Marking Value.
- If DSCP classification is used at the SU, an 802.1Q header is added, with the configured VPL ID (if VLAN Transparency Mode is Off) or the original VLAN ID (if VLAN Transparency Mode is On), and the 802.1p Marking Value. The original DSCP bits are kept.

3 **DSCP Marking Mode:** All frames are marked with the configured DSCP Marking Values.

If 802.1p classification is used at the SU, the frames will be transmitted to the operator's network according to the following rules:

- If VLAN Transparency Mode is Off, the frames will be forwarded with their original 802.1p value and the configured VPL ID. If no VPL ID is configured (VPL ID = Null), the 802.1p tags will not be forwarded.
- If VLAN Transparency Mode is On, the frames will be forwarded without any change (with the original 802.1p value and VLAN ID, if exists).

If DSCP classification is used at the SU, the original DSCP bits will be replaced by the configured DSCP Marking Value.

NOTE

- PPPoE frames can be marked only with 802.1p. DSCP marking for PPPoE services is not supported.
- In L2 Services, many protocols may be carried over Ethernet. As BreezeMAX bridges all these protocols, there's no way to know what protocol type is encapsulated in Ethernet beforehand. Consequently, if DSCP Marking is configured for L2, the BreezeMAX system uses DSCP marking only for IP packets (e.g. Ethertype 0x0800). If 802.1p Marking is configured, it is used for all frames.

4.10.4.4.6 Priority Marking Value

The Priority Marking Value enables definition of the marking value for data frames transmitted to the backbone, according to the configured Priority Marking Mode:

Table 4-9: Priority Marking Values

Priority Marking Mode	Priority Marking Values Range
Transparent	Not Applicable
802.1p	0 - 7
DSCP	0 - 63

4.10.4.4.7 Forwarding Rule

The Forwarding Rule to be used by the Service Profile. The Forwarding Rule parameter is not applicable to transparent Service Profiles (VLAN Transparency Mode On), as all transparent Service Profiles share the same pre-defined Forwarding Rule.

The Forwarding Rule must be one of the names that exist in the database after being defined using the Forwarding Rule menu. The Service Type defined in the selected Forwarding Rule must match the one defined for the Service Profile.

4.10.4.4.8 Priority Classifier (L2 and PPPoE Service Type)

The Priority Classifier to be used by the Service Profile. Not applicable for Voice Services.

The Priority Classifier must be one of the names that exist in the database, after being defined using the Priority Classifier menu.

4.10.4.4.9 Maximum Number of Voice Calls (L2 and Voice Service Type)

The Maximum Number of Voice Calls parameter sets the upper limit on the number of simultaneous VoIP calls that can be supported by the Service using the Service Profile. This parameter is applicable only for L2 and Voice Service Profiles and calls made by devices that support DRAP.

The available range is from 0 to 50 calls.

NOTE

To properly support Call Waiting, the Maximum Number of Voice Calls should be configured to a value that is twice the number of actual voice sessions that can be supported simultaneously.

4.10.4.4.10 Service Profile Class

A read-only parameter (available only in Show menu) indicating whether the Service Profile is Local or Global. Global Service Profiles cannot be either updated or deleted.

4.10.4.5 Forwarding Rules

The Forwarding Rule defines the features that affect forwarding and switching of data. Data in L2 and Voice services may be switched only between the Services that share the same Forwarding Rule. Data in PPPoE service can pass only between the subscriber and an Access Concentrator behind the Base Station.

The Forwarding Rule menu enables viewing all Local and Global Forwarding Rules in the database, defining new Forwarding Rules (that will be added to the database as Local Forwarding Rules), editing details of previously defined Local Forwarding Rules and removing Local Forwarding Rules from the database.

The Forwarding Rules database can hold up to 255 Forwarding Rules.

The Forwarding Rule's parameters are:

4.10.4.5.1 Forwarding Rule Name

A Forwarding Rule Name consists of up to 32 printable characters.

4.10.4.5.2 Service Type

The Service Type for which the Forwarding Rule is defined. The Service Type parameter is configurable only when defining a new Service Profile (Add). It is not changeable.

The currently available Service Type options are:

1 - L2

2 - PPPoE

3 - Voice

For more details refer to Section 4.10.1.2.

4.10.4.5.3 Unicast Relaying (L2 and Voice Service Type)

The Unicast Relaying parameter determines whether the AU performs unicast relaying. When the Unicast Relaying parameter is enabled, unicast packets originating from devices on the wireless link can be transmitted back to the

wireless link devices. If disabled, these packets are not sent to the wireless link even if they are intended for devices on the wireless link.

4.10.4.5.4 Broadcast Relaying (L2 and Voice Service Type)

The Broadcast Relaying parameter determines whether the AU performs broadcast relaying. When the Broadcast Relaying parameter is enabled, broadcast packets originating from devices on the wireless link are transmitted by the AU back to the wireless link devices, as well as to the backbone. If disabled, these packets are sent only to the backbone and are not sent back to the wireless link.

4.10.4.5.5 Unknown Forwarding Policy (L2 and Voice Services Type)

The Unknown Forwarding Policy parameter determines the mode of controlling the flow of information from the backbone to the wireless media. Select from the following options:

1 - Reject: The AU will transmit unicast packets only to those addresses that the AU knows to exist on the wireless link side.

2 - Forward: Enables the transmission of all packets, except unicast packets sent to addresses that the AU recognizes as being on its wired backbone side.

4.10.4.5.6 Multicast VLAN ID

The Multicast VLAN ID parameter is applicable only to Services assigned to SUs with SW version below 2.0. The Multicast VLAN ID is the VLAN ID to be attached to mulicast messages in order to enable full support of the VLAN feature by SUs with SW version below 2.0.

In SUs with SW version below 2.0, it was necessary to use behind the SU a VLAN switch with binding capability to support multiple VLAN IDs. The VLAN switch was responsible for duplicating all the packets to the correct ports according to the multicast connection, this required switch pre-configuration. If a VLAN switch with binding capability was not used, only a single VLAN ID behind the SU could be supported, and this VLAN ID has to be identical to the multicast VLAN ID.

In the current version, all packets received from the wireless port over a multicast connection are transmitted by the SU several times to the Ethernet port, each time with a different VLAN ID, taken from the VLAN ID list supplied by the NPU.

Available values are in the range of 0 to 4094 or null (empty string) for No Multicast VLAN ID.

Refer to Section 4.10.1.6 for guidelines regarding configuration of Multicast VLAN ID.

4.10.4.5.7 Multicast QoS Profile

The Multicast QoS Profile is the QoS Profile to be used for mulicast and broadcast messages.

The QoS Profile must be one of the names that exist in the database after being defined using the QoS Profile menu.

4.10.4.5.8 Forwarding Rule Class

A read-only parameter (available only in Show menu) indicating whether the Forwarding Rule is Local or Global. Global Forwarding Rules cannot be either updated or deleted.

4.10.4.6 Priority Classifiers (L2 and PPPoE Service Type)

The Priority Classifier defines the QoS Profiles to be allocated to users/sessions differentiated by DSCP or 802.1p priority classifiers. Priority Classifiers are not applicable to Voice Service Profiles.

Each Priority Classifier can define up to 4 uplink and 4 downlink QoS profiles.

NOTE

DSCP based Priority Classifiers are applicable only to IP or ARP traffic. It is not applicable to PPPoE and other Ethernet type traffic.

If a Priority Classifier is not applicable for a certain traffic (e.g. DSCP based profile with PPPoE traffic or 802.1p based profile with traffic that do not use VLAN tags), no prioritization scheme will be in effect and quality of service will be determined by the first QoS Profile in the applicable lists.

The Priority Classifier menu enables viewing all Local and Global Priority Classifiers in the database, defining new Priority Classifiers (that will be added to the database as Local Priority Classifiers), editing details of previously defined Local Priority Classifiers and removing Local Priority Classifiers from the database.

The Priority Classifiers database can hold up to 255 Priority Classifiers.

The Priority Classifier's parameters are:

4.10.4.6.1 Priority Classifier Name

A Priority Classifier Name consists of up to 32 printable characters.

4.10.4.6.2 Priority Type

The prioritization mechanism used by the Priority Classifier.

The available options are:

1 - DSCP

2 - 802.1p

4.10.4.6.3 Uplink Upper Priority Limits

The Uplink Upper Priority Limits parameter enables to define up to four ranges, where each range may be assigned a different QoS Profile for uplink communication. The list includes up to 4 numbers separated by commas, where each number must be higher than its predecessor and the last number must be the highest available for the applicable priority type (7 for 802.1p, 63 for DSCP).

Examples for acceptable lists:

DSCP Priority: [10,30,50,63]; [21,42,63]; [20,63]; [63].

802.1p Priority: [2,4,6,7]; [1,5,7]; [6,7]; [7].

A ranges list of 21,42,63 means that packets with a priority from 0 to 21 will be transmitted using the first QoS Profile defined in the Uplink QoS Profiles list (see below), packets with a priority from 22 to 42 will be transmitted using the second QoS Profile defined in the Uplink QoS Profiles list and packets with a priority higher than 42 (43 63) will be transmitted using the third Uplink QoS Profile.

A ranges list that includes a single entry (63 for DSCP and 7 for 802.1p) means that priority based classification is not used.

4.10.4.6.4 Uplink QoS Profiles

The Uplink QoS Profiles parameter enables to define up to four QoS Profiles, where each entry is the QoS Profile associated with the applicable entry in the Uplink Upper Priority Limits list. The list includes up to four QoS Profile Names, where each name must be one of the names that exist in the database after being defined using the QoS Profile menu. Each entry in the Uplink QoS Profiles list is associated with the applicable entry in the Uplink Priority Ranges list.

4.10.4.6.5 Downlink Upper Priority Limits

The DownLink Upper Priority Limits list functionality is the same as that of the Uplink Upper Priority Limits list, except that the ranges are defined for downlink communication.

4.10.4.6.6 Downlink QoS Profiles

The Downlink QoS Profiles list functionality is the same as that of the Uplink QoS Profiles list, except that the QoS Profiles are associated with the entries in the Downlink Upper Priority Limits list.

4.10.4.6.7 Priority Classifier Class

A read-only parameter (available only in Show menu) indicating whether the Priority Classifier is Local or Global. Global Priority Classifiers cannot be either updated or deleted.

4.10.4.7 QoS Profiles

The QoS Profile defines the Quality of Service parameters that are applicable when the QoS Profile is used.

Different QoS Profile Types are available to support different service requirements:

- **Real-Time (RT)** service is designed to meet the needs of Real Time Variable Bit Rate like services characterized by requirements for guaranteed rate and delay such as streaming video or audio. These services are dynamic in nature, but offer periodic dedicated requests opportunities to meet real-time requirements. Because the Subscriber Unit issues explicit requests, the protocol overhead and latency is increased, but capacity is granted only according to the real needs of the connection. QoS Profile parameters include Committed Information Rate (CIR) and Committed Time (CT).

- **Non-Real-Time (NRT)** service is very similar to the Real-Time polling service except that connections may utilize random access transmit opportunities for sending bandwidth requests. These Non Real Time Variable Bit Rate services, such as file transfer and Internet access with a minimum guaranteed rate, are characterized by requirement for a guaranteed rate, but can tolerate longer delays and are rather insensitive to jitter. QoS Profile parameters include Committed Information Rate (CIR), Committed Time (CT) and Maximum Information Rate (MIR) that limits the rate so that bandwidth intensive services will not expand to occupy the full bandwidth.

- **Best Effort (BE)** service is for services where neither throughput nor delay guarantees are provided. The Subscriber Unit sends requests for bandwidth in either random access slots or dedicated transmission opportunities. The occurrence of dedicated opportunities is subject to network load, and the Subscriber Unit cannot rely on their presence. Service parameters include Committed Time (CT) and Maximum Information Rate (MIR).

- **Continuous Grant (CG)** service is tailored for carrying constant bit rate (CBR) real-time services characterized by fixed size data packets on a periodic basis such as VoIP or E1/T1. The Base Station schedules regularly, in a preemptive manner, grants of the size defined at connection setup, without an explicit request from the Subscriber Unit. This eliminates the overhead and latency of bandwidth requests in order to meet the delay and jitter requirements of the underlying service. Service parameters include Packet Size (unsolicited grant size) and Sampling Rate (grant interval).

The priorities of allocating bandwidth to connections are in accordance with the QoS Type of the connections, in the following order:

1. CG
2. RT
3. NRT
4. BE

For each of the RT, NRT and BE connection, there is a second level of priorities according to the Committed Time (CT), where connections with CT=Short gets the highest priority and connections with CT=Long gets the lowest priority.

The QoS Profile menu enables viewing all Local and Global QoS Profiles in the database, defining new QoS Profiles (that will be added to the database as Local QoS Profiles), editing details of previously defined Local QoS Profiles and removing Local QoS Profiles from the database.

The QoS Profiles database can hold up to 255 QoS Profiles.

The available QoS Profile parameters depend on the QoS Type. The QoS Profile's parameters are:

4.10.4.7.1 QoS Profile Name

A QoS Profile Name consists of up to 32 printable characters.

4.10.4.7.2 QoS Type

The QoS Type that defines the QoS parameters that are applicable to the service. The available options are:

1 - CG (Continuous Grant)

2 - RT (Real Time)

3 - NRT (Non real time)

4 - BE (Best Effort)

4.10.4.7.3 CT (RT, NRT and BE QoS Types)

The CT (Committed Time) parameter defines the time window over which the information rate is averaged to ensure compliance with the CIR or MIR parameter. It is used also to prioritize bandwidth allocation to connections, where for each QoS Type, connections with a shorter CT get higher priority.

The available options are Short (1), Medium (2), and Long (3).

The actual value in milliseconds for each of the three options varies according to the QoS type:

Table 4-10: CT Values

CT	BE	NRT	RT
Short	50 mS	50 mS	50 mS
Medium	100 mS	100 mS	100 mS
Long	200 mS	200 mS	200 mS

4.10.4.7.4 CIR (RT and NRT QoS Types)

CIR is the information transfer rate that the system is committed to transfer under normal conditions. The rate is averaged over a minimum increment of time, which is defined by the CT parameter.

The range is from 0 to 12,000 Kbps.

4.10.4.7.5 MIR (NRT and BE QoS Types)

MIR is the maximum information rate that the system will allow for the connection. The rate is averaged over a minimum increment of time, which is defined by the CT parameter.

The range is from 1 to 12,000 Kbps.

MIR cannot be lower than CIR (applicable to NRT QoS type).

4.10.4.7.6 Packet Size (CG QoS Type)

The Packet Size parameter defines the amount of data in bytes that is expected for each grant.

The range is from 64 to 1550 (bytes).

4.10.4.7.7 Sample Interval (CG QoS Type)

The Sample Interval parameter defines the time in milliseconds between two successive grants (inter arrival time).

The range is from 5 to 100 (milliseconds).

4.10.4.7.8 QoS Profile Class

A read-only parameter (available only in Show menu) indicating whether the QoS Profile is Local or Global. Global QoS Profiles cannot be either updated or deleted.

4.10.4.8 Filtering Rules

The Filtering Rules menu enables defining L2 Filtering Rules and L3/L4 Filtering Rules.

4.10.4.8.1 L2 Filtering Rules

An L2 (Layer 2) Filtering Rule includes the MAC Address and Ethertype. A range of MAC Addresses can be defined for either the Source or Destination MAC Address field. It is possible to define "Any" for either the MAC Address or Ethertype field (but not for both fields).

The L2 Filtering Rules menu enables defining new L2 Filtering Rule, viewing details of previously defined L2 Filtering Rules and removing L2 Filtering Rules from the database. It is not possible to edit the parameters of an existing L2 Filtering Rule. The database can hold up to 255 L2 Filtering Rules.

The configurable L2 Filtering Rule parameters are:

4.10.4.8.1.1 Rule Name

The name of the L2 Rule. The L2 Rule Name is a string of 1 to 32 printable characters.

4.10.4.8.1.2 MAC Address

The base MAC Address that is used together with the MAC Address Mask to define a range of MAC addresses. A string of 6 octets (where each octet is represented by two hexadecimal numbers) separated by dashes ("-"). An empty entry means "Any". An "Any" MAC Address means that the filter is defined only by the Ethertype field.

4.10.4.8.1.3 MAC Address Mask

The mask that is used together with the MAC Address to define a range of MAC addresses. A string of 6 octets (where each octet is represented by two hexadecimal numbers) separated by dashes ("-"). In a binary representation the string must comprise a series of contiguous binary '1's starting from the MSB, followed by a series of contiguous binary '0's (if the range includes more than a single address). The MAC Address Mask parameter is not applicable for an "Any" MAC Address.

4.10.4.8.1.4 MAC Address Direction

The direction (Source or Destination) of the MAC Address. Indicates whether the range defined by the MAC Address and MAC Address Mask is for the Source MAC Address field or the Destination MAC Address field in the Ethernet frame. The MAC Address Direction parameter is not applicable to "Any" MAC Address.

4.10.4.8.1.5 Ethertype

The Ethertype of the Ethernet frame. The Ethertype is defined by 4 hexadecimal digits. An empty entry means "Any" and is applicable only if a MAC Address range is defined (the combination of "Any" for both the MAC Address and Ethertype is not allowed).

4.10.4.8.2 L3/L4 Filtering Rules

An L3/L4 (Layer 3/Layer 4) Filtering Rule includes the IP Address and Protocol. A range of IP Addresses can be defined for either the Source or Destination IP Address field. It is possible to define "Any" for either the IP Address or Protocol field (but not for both fields). If the specified Protocol is either TCP (6) or UDP (17), either the Source or Destination Port can be defined. It is also possible to define "Any" Port. The direction is applicable for both IP Address and Port.

The L3/L4 Filtering Rules menu enables defining new L3/L4 Filtering Rule, viewing details of previously defined L3/L4 Filtering Rules and removing L3/L4 Filtering Rules from the database. It is not possible to edit the parameters of an existing L3/L4 Filtering Rule. The database can hold up to 255 L3/L4 Filtering Rules.

The configurable L3/L4 Filtering Rule parameters are:

4.10.4.8.2.1 Rule Name

The name of the L3/L4 Rule. The L3/L4 Rule Name is a string of 1 to 32 printable characters.

4.10.4.8.2.2 IP Address

The base IP Address that is used together with the IP Address Mask to define a range of IP addresses. A string of 4 decimal numbers (where each number is in the range from 1 to 255) separated by dashes ("-"). An empty entry means "Any". An "Any" IP Address means that the filter is defined only by the Protocol field (and optionally by the Port and Port Direction for UDP or TCP protocols).

4.10.4.8.2.3 IP Address Mask

The mask that is used together with the IP Address to define a range of IP addresses. A string of 4 decimal numbers (where each number is in the range from 1 to 255) separated by dashes ("-"). In a binary representation, the string must comprise a series of contiguous binary '1's starting from the MSB, followed by a series of contiguous binary '0's (if the range includes more than a single address). The IP Address Mask parameter is not applicable to an "Any" IP Address.

4.10.4.8.2.4 IP Address Direction

The direction (Source or Destination) of the IP Address. Indicates whether the range defined by the IP Address and IP Address Mask is for the Source IP Address field or the Destination IP Address field in the IP frame. The IP Address Direction parameter is not applicable to "Any" IP Address.

4.10.4.8.2.5 Protocol

The protocol of the IP packet. The Protocol is defined by a decimal number from 0 to 254. An empty entry means "Any" and is applicable only if an IP Address range

is defined (the combination of "Any" for both the IP Address and Protocol is not allowed).

4.10.4.8.2.6 Port

The TDP/UCP port number, which is applicable only if the Protocol parameter is configured to a value of either 6 (TCP) or 17 (UDP). The Port is defined by a number in the range from 0 to 65534. An empty entry means "Any" port.

4.10.4.8.2.7 Port Direction

The direction (Source or Destination) of the Port. Indicates whether the Port number is for the Source Port field or the Destination Port field in the IP frame. The Port Direction parameter is not applicable to "Any" Port.

4.10.4.9 Interface Filtering

The Interface Filtering menu enables viewing and editing the filtering mechanisms to be used on frames received from the network (From Network Filtering) and from the wireless link (From Wireless Filtering).

The Interface Filtering menu also enables viewing and resetting the Filtering Rules Counters, which display for each of the applicable rules the number of frames matching the rule, accumulated since the last reset. In addition, there is a Non Matching counter, displaying the number of frames that did not match any of the relevant rules. The counters will be reset also after changing the Active Rule Type or disabling the Admin Status.

For each of the interfaces, the configurable parameters are:

4.10.4.9.1 L2 Filtering Rules List

The L2 Filtering Rules List submenu enables viewing details on the L2 Filtering Rules assigned to the interface, adding Rules (from the L2 Filtering Rules lists) to the list of Rules assigned to the interface, and deleting one or all Rules from the list. It also enables viewing/resetting the counter for a selected Rule. The counter displays the number of frames matching the Rule, accumulated since the last reset. The counter will be reset also after changing the Active Rule Type or disabling the Admin Status.

4.10.4.9.2 L3/L4 Filtering Rules List

The L3/L4 Filtering Rules List submenu enables viewing details on the L3/L4 Filtering Rules assigned to the interface, adding Rules (from the L3/L4 Filtering Rules lists) to the list of Rules assigned to the interface, and deleting one or all Rules from the list. It also enables viewing/resetting the counter for a selected Rule. The counter displays the number of frames matching the Rule, accumulated since the last reset. The counter will be reset also after changing the Active Rule Type or disabling the Admin Status.

4.10.4.9.3 Active Rule Type

The Active Rule Type parameter defines which of the Filtering Rules List is used.

The available options are Layer 2 and Layer 3/4.

The default option is Layer 2.

4.10.4.9.4 Admin Status

The Admin Status parameter defines whether the filtering mechanism is enabled or disabled.

The default option is Disabled.

4.10.4.9.5 Default Action

The Default Action parameter defines the action to be taken for a frame matching any of the applicable Filtering Rules: Deny (discard) or Allow (forward).

If the Default Action is Allow, all frames matching any of the applicable Filtering Rules will be forwarded, and all other frames will be discarded.

If the Default Action is Deny, all frames matching any of the applicable Filtering Rules will be discarded, and all other frames will be forwarded.

NOTE

L3/L4 Filtering Rules are applicable only to IP packets. If the Default Action is Allow, non-IP packets will be forwarded although they do not match any of the applicable Forwarding Rules.

The default option is Deny.

The menu also enables viewing and resetting the Non Matching Counter, which displays the total number of frames that did not match any of the applicable Filtering Rules, accumulated since the last reset. The counter will be reset also after changing the Active Rule Type or disabling the Admin Status.

NOTE

- Broadcasts and Management frames received from the network, whose destination is the NPU, are never filtered.
- ARP messages will be forwarded automatically if the following conditions are met:

  1. Active Rule Type is L3/L4.
  2. The L3/L4 Filtering Rules List includes at least one L4 Filtering Rule (a defined protocol).
  3. The Default Action is Allow.

  This is applicable for both interfaces.

4.10.4.10 Filtering Examples

Example 1: Block All Broadcasts Except ARP and PPPoE

To block all broadcasts except ARP and PPPoE, define an L2 Filtering Rule that includes all other broadcasts. Typically this includes broadcasts with IP Ethertype. The parameters of this rule will be:

- MAC Address: FF-FF-FF-FF-FF-FF
- MAC Address Mask: FF-FF-FF-FF-FF-FF
- MAC Address Direction: Destination
- Ethertype: 800

Assuming the intention is to block this broadcast in both directions, this Filtering Rule should be included in the L2 Filtering Rules List of both the From Network Filtering and the From Wireless Filtering. In addition, for both Interfaces the following configuration should be defined:

- Active Rule Type: Layer 2
- Admin Status: Enabled
- Default Action: Deny

If broadcasts using other Ethertypes except IP, ARP and PPPoE are excepted, similar Layer 2 Filtering Rules should be defined for these Ethertypes (with the broadcast MAC Address), and these rules should be added to the applicable Layer 2 Filtering Rules Lists.

Example 2: Block DHCP Server behind SU

To prevent the use of a DHCP server behind an SU, define the following L3/L4 Filtering Rule:

- IP Address: Any (empty)
- Protocol: 17 (UDP)
- Port: 67 (the source port of the DHCP server)

- Port Direction: Source

This Filtering Rule should be included in the L3/L4 Filtering Rules List of the From Wireless Filtering. In addition, the following configuration should be defined for the From Wireless Filtering Interface:

- Active Rule Type: Layer 3/4
- Admin Status: Enabled
- Default Action: Deny

4.10.4.11 MAC Addresses Deny List

The MAC Addresses Deny List menu enables viewing and editing the MAC Addresses Deny List. This list is used to deny services to MAC Addresses behind SUs. Uplink frames whose source MAC address matches any of the entries in the list and downlink frames whose destination MAC address matches any of the entries in the list will be discarded.

The MAC Addresses Deny List menu also enables viewing and resetting the MAC Addresses Deny List Counters, which display for each of the entries in the list the number of frames that were discarded because they match the entry, accumulated since the last reset.

4.10.4.12 XML File Parsing Errors

Select this option to view the parsing errors (if any) for the most recent XML file loaded into the NPU.

The NPU does not check the XML for XML format or syntax errors. It only check the validity of the content.

4.10.5 Defining Local Service Profiles

The process of defining completely new Service Profiles should be done "from bottom up", as each entity in the process is defined using one or more "lower level" entities.

To define a new Service Profile "from scratch":

1. Define the QoS profiles that should be available for the required Priority Classifiers (Uplink/Downlink QoS Profiles) and for the required Forwarding Rules (Multicast QoS Profile).

2. Define the Priority Classifiers that should be available for the required Service Profiles. All QoS Profiles required for the Uplink/Downlink QoS profiles list must be defined in advance.
3. Define the Forwarding Rules that should be available for the required Service Profiles. The QoS Profiles required for the Multicast QoS Profile parameter must be defined in advance.
4. Define the Service Profile. All required Priority Classifiers and Forwarding Rules must be defined in advance.
5. Once there are various QoS Profiles, Priority Classifiers and Forwarding Rules in the database, you can skip one or more of the steps 1 to 6.

4.10.6 Defining Local Services

To define a new Service "from scratch":

1. Verify that the necessary Service Profile(s) are available in the database.
2. Define the relevant Subscriber.
3. Verify that the applicable SU is defined.
4. Use existing Subscriber Name, SU MAC Address and Service Profile Name to define the required Service.

Once there are various Subscribers and SUs in the database, you can skip one or more of the steps 2 to 3.

4.10.7 Defining RADIUS Based Services

1. Verify that the necessary Service Profiles are available in the database of the relevant Base Station(s).
2. The format of the each Service in the ID Filter in the RADIUS Authentication server(s) is n:v:h:a:c; The ID Filter may include up to 5 Services, separated by “;”: s1;s2;...
   - n = Service Profile Name
   - v=<VLAN List>. v=<> is an empty VLAN list.
   - h=ON or OFF, indicating the configured Hybrid VLAN Mode.
   - a=<OFF or ON, VLAN ID>, indicating the configured Access VLAN Mode, and the Access VLAN ID for Access VLAN ON.

- c=ON/OFF, indicating the configured VLAN Classification Mode.

Example 1: n=be_96:v=<2,4,5>:h=ON:a=<ON,100>:c=ON;

Example 2: n=be_128:v=<22>:h=OFF:a=<OFF>:c=OFF;

4.10.8 Pre-configured Profiles

At manufacturing stage, each NPU is configured with a set of pre configured Profiles. Certain parameters of these Profiles may be modified to reflect specific implementation requirements. When the software version is upgraded, these pre-configured Profiles will not be installed again in the µBST. This is to prevent configuration problems from occurring if the modified Profiles differ from the factory loaded Profiles.

Note that upon resetting to NPU to its default configuration (Set Factory Defaults), pre-configured Profiles that were modified are not affected.

The pre-configured Service Profiles are:

- **Internet Access L2** - for basic Internet Access service with Best Effort QoS, utilizing L2 Service Type. This is the recommended Default Service Profile for Quick Mode.

- **Internet Access PPPoE** - for basic Internet Access service with Best Effort QoS, utilizing PPPoE Service Type.

- **Gold, Silver and Bronze Teleworking** - for teleworking applications with different QoS requirements. The pre-configured Teleworking Services are asymmetric: DL Rate > UL Rate.

- **Gold, Silver and Bronze LAN-to-LAN** - for LAN-to LAN applications with different QoS requirements. The pre-configured LAN-to-LAN Services are symmetric: DL rate = UL rate.

- **VoIP Service Profiles** - for DRAP-based gateways. Two pre configured VoIP service Profiles are defined; VoIP 1V for gateways with a single POTS interface, and VoIP 2V for fully supporting gateways for 2 POTS interfaces.

- **Service Profiles for Generic (non-DRAP) VoIP Devices:**

  - 1 POTS Basic VoIP G.729: 1 POTS, no Fax, G.729 codec with a 20 milliseconds sample interval, no priority marking.

- 1 POTS Advanced VoIP G.729: 1 POTS, T.38 Fax, G.729 codec with a 20 milliseconds sample interval, DSCP priority marking.
- 1 POTS Basic VoIP G.711: 1 POTS, no Fax, G.711 codec with a 20 milliseconds sample interval, no priority marking.
- 1 POTS Advanced VoIP G.711: 1 POTS, T.38 Fax, G.729 codec with a 20 milliseconds sample interval, DSCP priority marking.

For more details on defining Service Profiles for Generic (3rd party) VoIP devices, refer to Appendix B.

Except for the Basic PPPoE Internet Access pre-configured Service Profiles, all pre-configured Data Service Profiles use L2 Service Type to ensure transport of all L2 and L3 protocols.

It is recommended to use the L2 Best Effort Internet Access pre configured Service Profile as the Default Data Service Profile in Quick Mode.

The following tables provide details on the pre-configured Service Profiles, Forwarding Rules, Priority Classifiers and QoS Profiles.

Table 4-11: Pre-Configured Data Service Profiles

Name	Service Type	VPL ID*	Forwarding Rule	Priority Classifier
Internet Access L2	L2	Null	Internet Access L2	BE Asymmetric
Internet Access PPPoE	PPPoE	11	Internet Access PPPoE	BE Asymmetric
Gold Teleworking	L2	12	Gold Teleworking	Gold Asymmetric
Silver Teleworking	L2	13	Silver Teleworking	Silver Asymmetric
Bronze Teleworking	L2	14	Bronze Teleworking	Bronze Asymmetric
Gold LAN-to-LAN	L2	15	Gold LAN-to-LAN	Gold Symmetric
Silver LAN-to-LAN	L2	16	Silver LAN-to-LAN	Silver Symmetric
Bronze LAN-to-LAN	L2	17	Bronze LAN-to-LAN	Bronze Symmetric

In all pre-configured Data Service Profiles, the Priority Marking Mode is set to Transparent and the Maximum Number of Voice Calls is 0.

* VPL IDs are assigned arbitrary values and should be configured in accordance with specific network implementation, taking into account the considerations described in Section 4.10.1.6.

As Internet Access L2 is the recommended Default Data Service Profile, a VPL ID = None is used to ensure availability of basic data services in Quick Mode.

Table 4-12: Pre-Configured Forwarding Rules for Data Service

Name	Service Type	Unicast relaying	Broadcast Relaying	Unknown forwarding Policy	Multicast QoS	Multicast VLAN*
Internet Access L2	L2	Disable	Disable	Forward	BE 750	Null
Internet Access PPPoE	PPPoE	Disable (hard coded)	Disable (hard coded)	Forward (hard coded)	BE 750	Null
Gold Teleworking	L2	Disable	Disable	Forward	NRT 1500/1750	Null
Silver Teleworking	L2	Disable	Disable	Forward	NRT 1000/1150	Null
Bronze Teleworking	L2	Disable	Disable	Forward	NRT 750/850	Null
Gold LAN-to-LAN	L2	Enable	Enable	Forward	NRT 1500/1750	Null
Silver LAN-to-LAN	L2	Enable	Enable	Forward	NRT 1000/1150	Null
Bronze LAN-to-LAN	L2	Enable	Enable	Forward	NRT 750/850	Null

* Multicast VLANs are assigned arbitrary values and should be configured in accordance with specific network implementation, taking into account the considerations described in Section 4.10.1.6.

Table 4-13: Pre-Configured Priority Classifiers for Data Services

Name	Type	Uplink Priority Ranges	Uplink QoS Profiles	Downlink Priority Ranges	Downlink QoS Profiles
BE Asymmetric	802.1p	7	BE 96	7	BE 750
Gold Asymmetric	802.1p	7	NRT 128/192	7	NRT 1500/1750
Silver Asymmetric	802.1p	7	NRT 96/128	7	NRT 1000/1150
Bronze Asymmetric	802.1p	7	NRT 96/128	7	NRT 750/850
Gold Symmetric	802.1p	7	NRT 1500/1750	7	NRT 1500/1750
Silver Symmetric	802.1p	7	NRT 1000/1150	7	NRT 1000/1150
Bronze Symmetric	802.1p	7	NRT 750/850	7	NRT 750/850

Table 4-14: Pre-Configured QoS Profiles for Data Services

Name	Type	CIR (Kbps)	MIR (Kbps)	CT
BE 96	Best Effort	NA	96	Medium
BE 750	Best Effort	NA	750	Medium
NRT 96/128	Non Real Time	96	128	Medium

Table 4-14: Pre-Configured QoS Profiles for Data Services

Name	Type	CIR (Kbps)	MIR (Kbps)	CT
NRT 128/192	Non Real Time	128	192	Medium
NRT 750/850	Non Real Time	750	850	Medium
NRT 1000/1150	Non Real Time	1000	1150	Medium
NRT 1500/1750	Non Real Time	1500	1750	Medium

Table 4-15: Pre-Configured Voice Service Profiles (for DRAP-based Gateways)

Name	Service Type	VPL ID*	Priority Marking Mode	Maximum Number of Voice Calls**	Forwarding Rule
VoIP 1V	Voice	18	Transparent	2	VoIP
VoIP 2V	Voice	18	Transparent	4	VoIP

* VPL IDs are assigned arbitrary values and should be configured in accordance with specific network implementation, taking into account the considerations described in Section 4.10.1.6.

** To properly support Call Waiting, an additional connection must be available. Thus, the Maximum Number of Voice Calls is twice the maximum expected number of actual voice sessions.

Table 4-16: Pre-Configured Service Profiles for Generic (non-DRAP) VoIP Services

Name	Service Type	VPL ID*	Forwarding Rule	Priority Classifier
1 POTS Basic VoIP G.729	L2	19	VoIP	1 POTS Basic VoIP G.729
1 POTS Advanced VoIP G.729	L2	19	VoIP	1 POTS Advanced VoIP G.729
1 POTS Basic VoIP G.711	L2	19	VoIP	1 POTS Basic VoIP G.711
1 POTS Advanced VoIP G.711	L2	19	VoIP	1 POTS Advanced VoIP G.711

In all pre-configured Service Profiles for generic VoIP services, the Priority Marking Mode is set to Transparent and the Maximum Number of Voice Calls is 0.

* VPL IDs are assigned arbitrary values and should be configured in accordance with specific network implementation, taking into account the considerations described in Section 4.10.1.6.

Table 4-17: Pre-Configured Forwarding Rule for Voice Services

Name	Service Type	Unicast Relaying	Broadcast Relaying	Unknown forwarding Policy	Multicast QoS	Multicast VLAN*
VoIP	Voice	Enable (hard coded)	Enable (hard coded)	Forward (hard coded)	BE 128	Null

* Multicast VLANs are assigned arbitrary values and should be configured in accordance with specific network implementation, taking into account the considerations described in Section 4.10.1.6.

All pre-configured Service profiles for VoIP (DRAP-based Voice Services and Generic (3rd party) VoIP Services share the same pre-configured Forwarding Rule, to enable direct communication between all users of VoIP Services, regardless of the gateway type and other possible differences in the Service Profiles.

Table 4-18: Pre-Configured Priority Classifiers for Generic (non-DRAP) VoIP Service

Name	Type	Uplink Priority Ranges	Uplink QoS Profiles	Downlink Priority Ranges	Downlink QoS Profiles
1 POTS Basic VoIP G.729	DSCP	63	CG 47	63	CG 47
1 POTS Advanced VoIP G.729	DSCP	0	BE 64	0	BE 64
		26	RT 6	26	RT 6
		63	CG 38	63	CG 38
1 POTS Basic VoIP G.711	DSCP	63	CG 108	63	CG 108
1 POTS Advanced VoIP G.711	DSCP	0	BE 64	0	BE 64
		26	RT 11	26	RT 11
		63	CG 88	63	CG 88

Table 4-19: Pre-Configured BE and RT QoS Profile for Voice Services

Name	Type	CIR (Kbps)	MIR (Kbps)	CT
BE 64	Best Effort	NA	64	Medium
BE 128	Best Effort	NA	128	Medium
RT 6	Real Time	6	NA	Short
RT 11	Real Time	11	NA	Short

Table 4-20: Pre-Configured CG QoS Profile for Generic (non-DRAP) VoIP Services

Name	Type	Packet Size (Bytes)	Sample Interval (msec)
CG 38	Continuous Grant	94	20
CG 47	Continuous Grant	117	20
CG 88	Continuous Grant	218	20
CG 108	Continuous Grant	270	20

The following tables provide details on the pre-configured Profiles used for Transparent Services (VLAN Transparency Mode is ON):

Table 4-21: Pre-Configured Forwarding Rule for Transparent Services

Name	Service Type	Unicast Relaying	Broadcast Relaying	Unknown forwarding Policy	Multicast QoS	Multicast VLAN
@@Transparent@@	L2	Enable	Enable	Forward	@@Transparent@@	Null

NOTE

The name of the Transparent Forwarding Rule cannot be edited.

Table 4-22: Pre-Configured QoS Profile for Transparent Services

Name	Type	CIR (Kbps)	MIR (Kbps)	CT
@@Transparent@@	Best Effort	NA	128	Long

4.11 NPU Parameters Summary

Table 4-23: NPU Monitor Parameters Summary

Parameter	Range	Default	Run-Time Updated
Base Station Configuration Parameters			
Device Name	Up to 255 printable characters	Null	Yes
Device Location	Up to 255 printable characters	Null	Yes
ATPC Enable/Disable	1 - Disable 2 - Enable Disable is temporary until next reset of the AUs	Enable	Yes
Optimal Uplink RSSI (dBm)	-103 to -50	-69	Yes
Operator ID	X.X.X X: 0-255	186.190.0	No
Cell ID	X.X X: 0-255	0.250	No
Duplex Mode	FDD, TDD	TDD	No
DL-UL Ratio	1: 65-35 2: 60-40 3: 55-45 4: 50-50 5: 45-55 6: 40-60 7: 35-65	65-35	No
External 1PPS Clock	1 - Disable 2 - Enable	Enable	No
External 16MHz Clock	1 - Disable 2 - Enable	Disable	No
Base Station Alarms and Traps			

Table 4-23: NPU Monitor Parameters Summary

Parameter	Range	Default	Run-Time Updated
Traps Display Filter-Minimum Severity	1 - Critical 2 - Major 3 - Minor 4 - Warning 5 - Info	Info	Yes
Traps Display Filter-Days	1 - 31 days	31 days	Yes
Traps Configuration-Admin Status	1 - Disable 2 - Enable	Enable	Yes
Trap Configuration-Severity	1 - Critical 2 - Major 3 - Minor 4 - Warning 5 - Info	Depends on trap	Yes
Trap Configuration-Suppression Interval	0 - 86,400 (seconds). 0 means no suppression	0 (no suppression)	Yes
RADIUS General Parameters			
Shared Secret	Up to 16 printable characters, case sensitive	null (must be defined)	Yes
Retry Interval (sec)	1-5 (seconds)	5 (seconds)	Yes
Maximum Number of Retries	0-5	5	Yes
Keep Alive Timeout (sec)	60-180 (seconds)	60 (seconds)	Yes
RADIUS Authentication (up to two servers)			
IP Address	IP address	null	Yes
UDP Port	1-65535	1812	Yes
Server Status	1 - Primary 2 - Secondary (Only one server can be Primary)		Yes
RADIUS Accounting (up to two servers)			
IP Address	IP address	null	Yes
UDP Port	1-65535	1813	Yes

Table 4-23: NPU Monitor Parameters Summary

Parameter	Range	Default	Run-Time Updated
Server Status	1 - Primary 2 - Secondary (Only one server can be Primary)		Yes
Chain			
Chain Number	1 - 1500	0 (not defined yet-must be defined)	No
GPS Protocol	0 - None 1 - Trimble 2 - Symmetricom	Timble	No
Time Zone Offset From UTC	-12:00 to +13:00	+02:00	Yes
Stop Tx After Hold Over Timeout	1 - Disable 2 - Enable	Disable	Yes
Hold Over Passed Timeout	0 - 2880 (minutes)	30 (minutes)	Yes
NPU Parameters			
Administrator Password	Up to 16 printable characters, case sensitive	admin	Yes
Installer Password	Up to 16 printable characters, case sensitive	installer	Yes
Monitor Password	Up to 16 printable characters, case sensitive	monitor	Yes
Monitor Inactivity Timeout	0 - 60 minutes (0 means no timeout)	10 minutes	Yes
Management Port Parameters			
Management Port IP Address	IP address	10.0.0.1	No
Management Port Subnet Mask	IP address	255.255.255.0	No
Management Port Gateway	IP address	0.0.0.0	No
Management Port Destination Subnet	IP address	0.0.0.0	No
Management Port Destination Subnet Mask	IP address	0.0.0.0	No

Table 4-23: NPU Monitor Parameters Summary

Parameter	Range	Default	Run-Time Updated
Management Port Management Traffic Enable/Disable	1 - Disable 2 - Enable	Enable	No
Data Port Parameters			
Data Port IP Address	IP address	1.1.1.3	No
Data Port Subnet Mask	IP address	255.255.255.0	No
Data Port Gateway	IP address	0.0.0.0	No
Data Port Management VLAN ID	0-4094 or Null for No VLAN	Null	No
Data Port Speed	1 - 100 Mbps 2 - 1 Gbps	100 Mbps	No
Data Port Management Traffic Enable/Disable	1 - Disable 2 - Enable	Enable	No
Authorized Managers			
Authorized Manager IP Address	IP address	NA	Yes
Authorized Manager Send Traps	1 - Disable 2 - Enable	NA	Yes
Authorized Manager Read Community	Up to 23 printable characters, case sensitive	NA	Yes
Authorized Manager Write Community	Up to 23 printable characters, case sensitive	NA	Yes
Bridge			
Bridge Aging Time	1 - 1440 minutes or 0 for no aging	10 minutes	Yes
Voice			
DRAP TTL Retries	1 - 100	4	Yes
Radio Cluster Parameters			
Radio Cluster ID	1 - 6		Yes
Name	Up to 32 printable characters	Null	Yes
Location	0 to 255 printable characters		Yes
Sector Heading	0 - 359 (degrees)	0	Yes
Sector Beam Width	0 - 359 (degrees)	90	Yes
ODU Parameters			

Table 4-23: NPU Monitor Parameters Summary

Parameter	Range	Default	Run-Time Updated
ODU ID	1 - 24		Yes
Associated Radio Cluster	1 - 6 (must be a defined Radio cluster ID)		Yes
Configured ODU Frequency Band	According to loaded Frequency Bands file	0 (Not Defined)	Yes
Tx Power (dBm)	13 - 50 (dBm, in increments of 0.25) Actual value depending on ODU Type	28	Yes
Admin Status	1 - Disable 2 - Enable	Disable	Yes
AU - SW Files in NPU - Default SW File (Standard) Not applicable for current release.			
Name	A name of an AU SW File that exist in the NPU		Yes
Action	0 - None 1 - Load 2 - Run from Shadow 3 - Set as Main		Yes
AU - SW Files in NPU - Default SW File (Advanced Si)			
Name	A name of an AU SW File that exist in the NPU		Yes
Action	0 - None 1 - Load 2 - Run from Shadow 3 - Set as Main		Yes
AU - Unit Control - SW Versions Control			
SW File: Name	A name of an AU SW File that exist in the NPU		Yes
SW File: Action	0 - None 1 - Load 2 - Run from Shadow 3 - Set as Main		Yes

Table 4-23: NPU Monitor Parameters Summary

Parameter	Range	Default	Run-Time Updated
SU SW File: Name	A name of an SU SW File that exist in the NPU		Yes
SU SW File: Action	0 - None 1 - Load 2 - Run from Shadow 3 - Set as Main		Yes
AU MAC Parameters			
Sector ID	0-255	206	No
ARQ Enable/Disable	1 - Disable 2 - Enable	Disable	No
Maximum Cell Radius (km)	Bandwidth 3.5 MHz: 10 -50 km Bandwidth 5 MHz: 7 - 45 km	20 km	No
AU Phy Parameters			
Bandwidth (MHz)	1 - 1.75 2 - 3.5 3 - 5 4 - 7 5 - 10	3.5	No
AU Multi Channel Parameters			
Diversity Mode	1 - No Diversity 2 - Second Order Diversity 3 - Fourth Order Diversity	No Diversity	Yes
Channel ID	1 - 4 (1 - 2 in version 2.0)		
Associated ODU	1 - 24 (must be a defined ODU ID)		No
Downlink (Tx) Frequency (MHz)	According to the Configured ODU Frequency Band and AU Bandwidth		No
Admin Status	1 - Disable 2 - Enable	Disable	No
AU Multirate Parameters			

Table 4-23: NPU Monitor Parameters Summary

Parameter	Range	Default	Run-Time Updated
Multirate Enable/Disable	1 - Disable 2 - Enable Disable is temporary until next reset	Enable	Yes
Uplink Basic Rate	1 - BPSK 1/2 2 - BPSK 3/4 3 - QPSK 1/2 4 - QPSK 3/4 5 - QAM16 1/2 6 - QAM16 3/4 7 - QAM64 2/3 8 - QAM64 3/4	BPSK 1/2	Yes
Downlink Basic Rate	1 - BPSK 1/2 2 - BPSK 3/4 3 - QPSK 1/2 4 - QPSK 3/4 5 - QAM16 1/2 6 - QAM16 3/4 7 - QAM64 2/3 8 - QAM64 3/4	BPSK 1/2	Yes
AU Voice Parameters			
Maximum Number of Voice Calls	0 - 300	50	Yes
SU - SW Files in NPU - Default SW File (Standard) Not applicable for current release.			
Name	A name of an SU SW File that exist in the NPU		Yes
Action	0 - None 1 - Load 2 - Run from Shadow 3 - Set as Main		Yes
SU - SW Files in NPU - Default SW File (Advanced Si)			

Table 4-23: NPU Monitor Parameters Summary

Parameter	Range	Default	Run-Time Updated
Name	A name of an SU SW File that exist in the NPU		Yes
Action	0 - None 1 - Load 2 - Run from Shadow 3 - Set as Main		Yes
SU - Unit Control Parameters			
SU Status	1 - Permanent 2 - Temporary	Permanent	Yes
SW File: Name	A name of an SU SW File that exist in the NPU		Yes
SW File: Action	0 - None 1 - Load 2 - Run from Shadow 3 - Set as Main		Yes
SU Registration Parameters			
Name	Read-only (User Name)		NA
Organization Name	Read-only		NA
Address	Read-only		NA
Country	Read-only		NA
SU MAC Parameters			
Base Station ID	X.X.X.X.X.X X: 0 - 255		No
Base Station ID Mask	X.X.X.X.X.X X: 0 - 255		No
SU Phy Parameters			

Table 4-23: NPU Monitor Parameters Summary

Parameter	Range	Default	Run-Time Updated
Bandwidth (MHz)	1 - 1.75 2 - 3.5 3 - 5 4 - 7 5 - 10		No
Uplink (Tx) Frequency (MHz)	Not applicable for current release. Depends on Frequency Bands Group available for the AU, and the Bandwidth.		No
SU Multirate and ATPC Parameters			
Uplink Rate	Applicable only if Multirate in AU is disabled: 1 - BPSK 1/2 2 - BPSK 3/4 3 - QPSK 1/2 4 - QPSK 3/4 5 - QAM16 1/2 6 - QAM16 3/4 7 - QAM64 2/3 8 - QAM64 3/4	New SU: Uplink Basic Rate. Connected SU: Last used rate.	Yes
Downlink Rate	Applicable only if Multirate in AU is disabled: 1 - BPSK 1/2 2 - BPSK 3/4 3 - QPSK 1/2 4 - QPSK 3/4 5 - QAM16 1/2 6 - QAM16 3/4 7 - QAM64 2/3 8 - QAM64 3/4	New SU: Downlink Basic Rate. Connected SU: Last used rate.	Yes
SU Ethernet Port Parameters			

Table 4-23: NPU Monitor Parameters Summary

Parameter	Range	Default	Run-Time Updated
Ethernet Port Configuration	1 - 10 Mbps Half Duplex 2 - 10 Mbps Full duplex 3 - 100 Mbps Half Duplex 4 - 100 Mbps Full Duplex 5 - Auto Negotiation		No
SU Password			
Password	Up to 20 printable characters, case sensitive		Yes
SU Bridging Parameters			
Enable/Disable Limit on Number of Supported Devices	1 - Disable 2 - Enable	Disable	Yes
Maximum Number of Supported Devices	1 - 512	512	Yes
Bridge Aging Time	1 - 1440 minutes	3 minutes	Yes
Best BST/AU Parameters			
Best BST/AU Support	1 - Disable 2 - Enable		No
Preferred BST/AU ID	X.X.X.X.X.X X: 0 - 255		No
Preferred BST/AU ID Mask	X.X.X.X.X.X X: 0 - 255		No
Frequency Scanning Parameters			
Start Rx Frequency (MHz)	Depends on Frequency Bands Group available for the AU, and the Bandwidth.		No
End Rx Frequency (MHz)	Depends on Frequency Bands Group available for the AU, and the Bandwidth.		No
Scanning Main Step (KHz)	Bandwidth 3.5 MHz: 125 to 1750 in steps of 125 Bandwidth 5 MHz: 125 to 5000 in steps of 125		No
Scan Step Mask	Up to 8 numbers (1-8) separated by commas, or null		No

Table 4-23: NPU Monitor Parameters Summary

Parameter	Range	Default	Run-Time Updated
Services - General Parameters			
Service Mode	1 - Advanced 2 - Quick	Quick	Yes
Default L2/Voice Service Profile	Name of an existing L2 or Voice Service Profile, or None.	Internet Access L2	Yes
Default PPPoE Service Profile	Name of an existing PPPoE Service Profile, or None.	None	Yes
Services - Subscribers Parameters			
Subscriber Name	Up to 32 printable characters. Must be unique in the network.		Yes
First Name	Up to 50 printable characters.		Yes
Last Name	Up to 50 printable characters.		Yes
Description	Up to 50 printable characters.		Yes
Admin Status	1 - Disabled 2 - Enabled		Yes
Services - Services Parameters			
Service Name	Up to 32 printable characters.		Yes
Subscriber Name	A Subscriber Name (up to 32 printable characters) that exists in the database		Yes
SU MAC Address	MAC Address of an SU that exists in the database		Yes
Service Profile Name	A Service Profile Name (up to 32 printable characters) that exists in the database		Yes
VLAN List	A list of different numbers separated by commas where each entry is from 1 to 4094. Null is for No VLAN. Up to 16 entries when Hybrid VLAN Mode is Off. Up to 15 entries when Hybrid VLAN Mode is On.		Yes
Hybrid VLAN Mode	1 - Off 2 - On		Yes
VLAN Classification Mode	1 - Off 2 - On		Yes

Table 4-23: NPU Monitor Parameters Summary

Parameter	Range	Default	Run-Time Updated
Access VLAN	1-4094		Yes
Admin Status	1 - Disabled 2 - Enabled		Yes
Services - Service Profiles Parameters			
Service Profile Name	Up to 32 printable characters.		Yes
Service Type	Applicable only for new Service Profiles (Add): 1 - L2 2 - PPPoE 3 - Voice		Yes
VLAN Transparency Mode	1 - Off 2 - On		Yes
VPL ID	0 - 4094 or null for No VPL ID.		Yes
Priority Marking Mode	1 - Transparent 2 - 802.1p 3 - DSCP		Yes
Priority Marking Value	802.1p: 0 - 7 DSCP: 0 - 63		Yes
Forwarding Rule	A Forwarding Rule Name (up to 32 printable characters) that exists in the database		Yes
Priority Classifier	A Priority Classifier Name (up to 32 printable characters) that exists in the database		Yes
Maximum Number of Voice Calls	0 - 50		Yes
Services - Forwarding Rule Parameters			
Forwarding Rule Name	Up to 32 printable characters		Yes
Service Type	Applicable only for new Service Profiles (Add): 1 - L2 2 - PPPoE		Yes

Table 4-23: NPU Monitor Parameters Summary

Parameter	Range	Default	Run-Time Updated
Unicast Relaying	Applicable only for L2 Service type: 1 - Disabled 2 - Enabled		Yes
Broadcast Relaying	Applicable only for L2 Service type: 1 - Disabled 2 - Enabled		Yes
Unknown Forwarding Policy	Applicable only for L2 Service type: 1 - Reject 2 - Forward		Yes
Multicast VLAN ID	0 - 4094 or null for No Multicast VLAN. Applicable only for Services assigned to SUs with SW version below 2.0.		Yes
Multicast QoS Profile	A QoS Profile Name (up to 32 printable characters) that exists in the database		Yes
Services - Priority Classifiers Parameters			
Priority Classifier Name	Up to 32 printable characters		Yes
Priority Type	1 - DSCP 2 - 802.1p		Yes
Uplink Priority Ranges	Up to 4 numbers separated by commas, where each number must be higher than its predecessor and the last number must be the highest available for the applicable priority type (7 for 802.1p, 63 for DSCP).		Yes
Uplink QoS Profiles	Up to four QoS Profile Names separated by commas, where each name (up to 32 printable characters) is a name of a QoS Profile that exists in the database. The number of entries in the list must be identical to number of entries in Uplink Priority Ranges list.		Yes
Downlink Priority Ranges	Up to 4 numbers separated by commas, where each number must be higher than its predecessor and the last number must be the highest available for the applicable priority type (7 for 802.1p, 63 for DSCP).		Yes

Table 4-23: NPU Monitor Parameters Summary

Parameter	Range	Default	Run-Time Updated
Downlink QoS Profiles	Up to four QoS Profile Names separated by commas, where each name (up to 32 printable characters) is a name of a QoS Profile that exists in the database. The number of entries in the list must be identical to number of entries in Downlink Priority Ranges list.		Yes
Services - QoS Profiles Parameters			
QoS Profile Name	Up to 32 printable characters		Yes
QoS Type	2 - RT 3 - NRT 4 - BE		Yes
CT	1 - Short 2 - Medium 3 - Long		Yes
CIR (Kbps)	Applicable to RT and NRT: 0 - 12,000		Yes
MIR (Kbps)	Applicable to NRT and BE: 1 - 12,000. MIR cannot be lower than CIR (NRT)		Yes
Packet Size (Bytes)	Applicable to CG 64 - 1550 (Bytes)		Yes
Sample Interval (msec)	Applicable to CG 5 - 100 (milliseconds)		Yes
L2 Filtering Rules Parameters			
L2 Filtering Rule Name	Up to 32 printable characters		Yes
MAC Address	MAC address or null for Any		Yes
MAC Address Mask	MAC address		Yes
MAC Address Direction	1 - Source 2 - Destination		Yes
Ethertype	4 hexadecimal digits or null for Any		Yes
L3/L4 Filtering Rules Parameters			

Table 4-23: NPU Monitor Parameters Summary

Parameter	Range	Default	Run-Time Updated
L3/L4 Filtering Rule Name	Up to 32 printable characters		Yes
IP Address	IP address or null for Any		Yes
IP Address Mask	IP address		Yes
IP Address Direction	1 - Source 2 - Destination		Yes
Protocol	0-254 or null for Any		Yes
Port	0-65534 or null for Any		Yes
Port Direction	1 - Source 2 - Destination		Yes
From Wireless Filtering/From Network Filtering Parameters			
L2 Filtering Rules List - Add	L2 Filtering Rule ID		Yes
L3/L4 Filtering Rules List - Add	L3/L4 Filtering Rule ID		Yes
Active Filtering Rule Type	1 - Layer 2 2 - Layer 3/4	Layer 2	Yes
Admin Status	1 - Disabled 2 - Enabled	Disabled	Yes
Default Action	1 - Deny 2 - Allow	Deny	Yes
MAC Address Deny List			
Add	MAC address (of a device behind SU)		Yes

A

Appendix A - Software Upgrade

In This Appendix:

- “Before you Start” on page 232
- “File Loading Procedure” on page 233
- “Completing the Software Upgrade (Switching Versions)” on page 235

A.1 Before you Start

NOTE

This section describes software upgrades using the Monitor program. The upgrade procedure can also be performed using AlvariSTAR. For instructions on using AlvariSTAR for software upgrade, refer to "The Software Upgrade Manager" section in the AlvariSTAR User Manual.

Loading of new SW files to the unit's FLASH memory can be performed by a simple loading procedure using a TFTP application. Upgrade packages can be obtained from the Technical Support section of Alvarion's web site, http://www.alvarion.com/.

Before performing an upgrade procedure, be sure you have the most recent instructions, and that the correct SW files are available in your computer.

If you are loading new SU/AU SW files, verify that no more than two SU/AU SW files exist in the NPU/µBST. If there are three SU/AU SW files in the unit, one of them must be deleted before loading a new SU/AU SW file.

To view the current SU/AU SW files in NPU/µBST:

Select SU/AU > SW Files in NPU/µBST > Show Files.

To delete an SU/AU SW file from NPU/µBST:

Select SU/AU > SW Files in NPU/µBST > Delete a File and enter the name of the file to be deleted.

A.2 File Loading Procedure

To load software files:

1. Verify that you have IP connectivity from your computer to the NPU/µBST (either the MGMT or the DATA port). To verify the connection, ping the unit's IP address and verify that PING replies are being received.
2. To perform the upgrade, use a DOS TFTP utility with the following syntax:
   tftp i hostaddress put sourcefile

   where *-i* stands for binary mode and *hostaddress* is the IP address of the unit to be upgraded (NPU/µBST). The *put* command instructs the PC client to send a file to the *hostaddress*. *sourcefile* is the name of the SW file in the PC Client.

   For example, to load the file npu_2_0_1_15 to the NPU whose IP address is 172.17.31.215, use the following command:

   tftp -i 172.17.31.215 put npu_2_0_1_15

NOTE

It is recommended to upgrade all system elements with the latest software version. Nevertheless, it is possible to upgrade each unit separately and independently.

3. Following a successful completion of the file loading process, the Transfer successful DOS message is displayed.
4. The unit decompresses the loaded file and checks the integrity of the new version. The new version replaces the previous shadow version only after verification. If verification tests fail, the loaded version will be rejected. The unit will reject a file if either the file name or the version number matches the current Main versions.
5. Check that the loaded versions exist in the unit:

To view the current NPU/µBST SW Versions in the unit:

Select *Unit Control* > *SW Versions Control* > *Show Versions*.

To view the current NPU/μBST SW Versions in the unit:

Select *SU/AU* > *SW Files in NPU/μBST* > *Show Files*.

A.3 Completing the Software Upgrade (Switching Versions)

After verifying successful upload of all software files, set the new version as the main version in each one of the upgraded system elements:

- SU(s): Select the SU that should be upgraded. Select *Unit Control* > *SW Versions Control* > *Set as Main*, and enter the name of the new SU SW file. The unit will reset automatically and will use the new version after power-up. Repeat the process for all SUs that should be upgraded.

- AU(s): Select the AU that should be upgraded. Select *Unit Control* > *SW Versions Control* > *Set as Main*, and enter the name of the new AU SW file. The unit will reset automatically. After power-up, the unit will use the new version. Repeat the process for all AUs that should be upgraded.

- NPU/µBST: Select *Unit Control* > *SW Versions Control* > *Run from Shadow*. The system will reset automatically. After power-up, the NPU/µBST will run from the new version, that at this stage is still marked as the Shadow Version. To switch versions, select *Unit Control* > *SW Versions Control* > *Set as Main*.

B

Appendix B - Defining Service Profiles for Generic VoIP Gateways

In This Appendix:

- "Introduction" on page B-238
- "1 POTS Basic VoIP G.729 Service Profile" on page B-240
- "1 POTS Advanced VoIP G.729 Service Profile" on page B-242
- "1 POTS Basic VoIP G.711 Service Profile" on page B-244
- "1 POTS Advanced VoIP G.711 Service Profile" on page B-246

B.1 Introduction

This section describes the method used for defining the pre-configured Service Profiles for Generic (3rd party) VoIP devices that do not use the DRAP protocol. The same principles can be used for modifying the pre-configured profiles or creating new ones for VoIP services that have different characteristics.

B.1.1 Priority Marking

We distinguish between two types of Service Profiles for Generic VoIP devices:

- **Marking is not used:** This scenario is applicable when the VoIP device behind the SU does not support either DSCP or 802.1p marking to distinguish between different VoIP related traffic types, or when such marking is not used for any reason. The implication is that a single Continuous Grant connection should be used for all VoIP traffic.

- **Marking is used:** This scenario is applicable when the VoIP device is capable of marking the different VoIP related traffic types. The assumption is that 3 different priority marks are used: One for RTP traffic, the second for RTCP and VoIP Signaling, and a third one for Data (Device Management).

B.1.2 General Assumptions

- **Protocol Header:** 18 bytes for Ethernet L2 header (including 4 bytes for VLAN), plus 40 bytes of IP/UDP/RTP headers. A total of 58 bytes.

- **RTCP bandwidth:** RFC 3556, Session Description Protocol (SDP) Bandwidth Modifiers for RTP Control Protocol (RTCP) Bandwidth, states that normally, the amount of bandwidth allocated to RTCP in an RTP session is 5% of the session bandwidth. To be on the safe side allocate 10% of the RTP bandwidth to RTCP.

- **VoIP Signaling:** Cisco states that its IP Phones generate approximately 150 bps signaling traffic (without L2 overhead). To be on the safe side assume 2 Kbps of VoIP Signaling traffic for each POTS interface.

- **Fax:** Fax services are assumed to be based on T.38 Fax Relay. Protocol Header is assumed to be 58 bytes (same as for RTP).

- **Data:** Data traffic may include ARP, DHCP, TFTP, SNMP, HTTP and other management protocols. The recommended default bandwidth value is up to 64

Kbps if a Best Effort connection is used for this traffic. If a Continuous Grant service is used for all VoIP related traffic, a lower bandwidth will be allocated to Data traffic. Note that the use of bandwidth consuming protocols when an active call is present should be avoided.

B.2 1 POTS Basic VoIP G.729 Service Profile

B.2.1 Service Characteristics

- G.729 codec, 20msec sample interval
- 1 POTS
- No Fax
- Priority marking behind the SU is not used: All VoIP related traffic is classified onto a single Continuous Grant (CG) connection.
- Multiple media streams to support Call-Waiting: If the traffic exceeds the BW allocated to the CG connection, the SU may request to double the allocated BW.

B.2.2 RTP BW Calculation

The required bandwidth for a G.729 call (8 Kbps codec bit rate) with RTP and 20 bytes of voice payload is:

Total packet size (bytes) = (Ethernet of 18 bytes) + (IP/UDP/RTP header of 40 bytes) + (voice payload of 20 bytes) = 78 bytes

Total packet size (bits) = (78 bytes) * 8 bits per byte = 624 bits

PPS (Packets Per Second) = (8 Kbps codec bit rate) / (160 bits) = 50 pps

Note: 160 bits = 20 bytes (voice payload) * 8 bits per byte

Bandwidth per call = Total packet size (624 bits) * 50 pps = 31.2 Kbps

B.2.3 RTCP BW Calculation

RTCP BW is 10% of RTP: 10% of 31.2 Kbps is 3.12 Kbps.

B.2.4 QoS Profile

The calculated bandwidth required for RTP traffic is 31.2 Kbps. To accommodate for other traffic types, such as RTCP (up to 3.1 Kbps), Voice Signaling (up to 2 Kbps) and Data (Device Management), we allocate to it a total bandwidth of 31.2 x 1.5=46.8 Kbps (equivalent to a Packet Size of 936 bits, or 117 bytes). The SU may

request twice this BW so it will be allocated with up to approximately 94 Kbps. This is assumed to be sufficient for all traffic scenarios, including Call Waiting.

Thus, the CG 47 QoS Profile parameters are:

- Packet Size: 117 bytes
- Sample Interval: 20 msec

B.3 1 POTS Advanced VoIP G.729 Service Profile

B.3.1 Service Characteristics

- G.729 codec, 20msec sample interval
- 1 POTS
- T.38 Fax
- DSCP priority marking behind the SU is used, with the following values:
  - 63: RTP traffic
  - 26: RTCP and VoIP traffic
  - 0: Data traffic
- Single media stream to support Call-Waiting

B.3.2 Voice RTP BW Calculation

The required bandwidth for a G.729 call (8 Kbps codec bit rate) with RTP and 20 bytes of voice payload is:

Total packet size (bytes) = (Ethernet of 18 bytes) + (IP/UDP/RTP header of 40 bytes) + (voice payload of 20 bytes) = 78 bytes

Total packet size (bits) = (78 bytes) * 8 bits per byte = 624 bits

PPS (Packets Per Second) = (8 Kbps codec bit rate) / (160 bits) = 50 pps

Note: 160 bits = 20 bytes (voice payload) * 8 bits per byte

Bandwidth per call = Total packet size (624 bits) * 50 pps = 31.2 Kbps

B.3.3 Voice RTCP BW Calculation

RTCP BW is 10% of RTP: 10% of 31.2 Kbps is 3.12 Kbps.

B.3.4 T.38 14,400 Kbps Fax RTP BW Calculation

The required bandwidth with a 20 msec sample interval is as follows:

Total packet size (bytes) = (Ethernet of 18 bytes) + (IP/UDP/RTP header of 40 bytes) + (voice payload of 36 bytes) = 94 bytes

Total packet size (bits) = (94bytes) * 8 bits per byte = 752 bits

PPS = (14.4 Kbps bit rate) / (288 bits) = 50 pps

Note: 288 bits = 36 bytes (voice payload) * 8 bits per byte

Bandwidth per call = total packet size (752bits) * 50 pps = 37.6 Kbps

Since Fax BW is higher than Voice BW, the Fax BW requirement mandates the CG connection's attributes. This is true for all G.729 and G.723 codecs.

B.3.5 FAX RTCP BW Calculation

RTCP BW is 10% of RTP: 10% of 37.6 Kbps is 3.76 Kbps.

B.3.6 QoS Profiles

B.3.6.1 CG QoS for RTP Traffic

The calculated bandwidth required for RTP traffic is 37.6 Kbps (equivalent to a Packet Size of 752 bits, or 94 bytes). Thus, the CG 38 QoS Profile parameters are:

- Packet Size: 117 bytes
- Sample Interval: 20 msec

B.3.6.2 RT QoS for RTCP and VoIP Signaling

The required bandwidth is 5.76 Kbps (3.76 Kbps for Fax RTCP plus 2 Kbps for VoIP Signaling). We round it up to 6 Kbps. Thus, the required RT 6 QoS Profile parameters are:

- CIR: 6 Kbps
- CT: Short

B.3.6.3 BE QoS for Data

As stated, the recommended QoS Profile for Data is BE 64, with the following parameters:

- MIR: 64 Kbps
- CT: Medium

B.4 1 POTS Basic VoIP G.711 Service Profile

B.4.1 Service Characteristics

- G.711 codec, 20msec sample interval
- 1 POTS
- No Fax
- Priority marking behind the SU is not used: All VoIP related traffic is classified onto a single Continuous Grant (CG) connection.
- Multiple media streams to support Call-Waiting: If the traffic exceeds the BW allocated to the CG connection, the SU may request to double the allocated BW.

B.4.2 RTP BW Calculation

The required bandwidth for a G.711 call (64 Kbps codec bit rate) with RTP and 160 bytes of voice payload is:

Total packet size (bytes) = (Ethernet of 18 bytes) + (IP/UDP/RTP header of 40 bytes) + (voice payload of 160 bytes) = 218 bytes

Total packet size (bits) = (218 bytes) * 8 bits per byte = 1744 bits

PPS = (64 Kbps codec bit rate) / (1280 bits) = 50 pps

Note: 1280 bits = 160 bytes (voice payload) * 8 bits per byte

Bandwidth per call = total packet size (1744 bits) * 50 pps = 87.2Kbps

B.4.3 RTCP BW Calculation

RTCP BW is 10% of RTP: 10% of 87.2 Kbps is 8.72 Kbps.

B.4.4 QoS Profile

The calculated bandwidth required for RTP traffic is approximately 88 Kbps. To accommodate for other traffic types, such as RTCP (up to 8.7 Kbps), Voice Signaling (up to 2 Kbps) and Data (Device Management), we allocate to it a total bandwidth of 108 Kbps (equivalent to a Packet Size of 2160 bits, or 270 bytes). The SU may request twice this BW so it will be allocated with up to approximately

216 Kbps. This is assumed to be sufficient for all traffic scenarios, including Call Waiting.

Thus, the CG 108 QoS Profile parameters are:

- Packet Size: 270 bytes
- Sample Interval: 20 msec

B.5 1 POTS Advanced VoIP G.711 Service Profile

B.5.1 Service Characteristics

- G.729 codec, 20msec sample interval
- 1 POTS
- T.38 Fax
- DSCP priority marking behind the SU is used, with the following values:
  - 63: RTP traffic
  - 26: RTCP and VoIP traffic
  - 0: Data traffic
- Single media stream to support Call-Waiting

B.5.2 Voice RTP BW Calculation

The required bandwidth for a G.711 call (64 Kbps codec bit rate) with RTP and 160 bytes of voice payload is:

Total packet size (bytes) = (Ethernet of 18 bytes) + (IP/UDP/RTP header of 40 bytes) + (voice payload of 160 bytes) = 218 bytes

Total packet size (bits) = (218 bytes) * 8 bits per byte = 1744 bits

PPS = (64 Kbps codec bit rate) / (1280 bits) = 50 pps

Note: 1280 bits = 160 bytes (voice payload) * 8 bits per byte

Bandwidth per call = total packet size (1744 bits) * 50 pps = 87.2Kbps

B.5.3 Voice RTCP BW Calculation

RTCP BW is 10% of RTP: 10% of 87.2 Kbps is 8.72 Kbps.

B.5.4 T.38 14,400 Kbps Fax RTP BW Calculation

The required bandwidth with a 20 msec sample interval is as follows:

Total packet size (bytes) = (Ethernet of 18 bytes) + (IP/UDP/RTP header of 40 bytes) + (voice payload of 36 bytes) = 94 bytes

Total packet size (bits) = (94bytes) * 8 bits per byte = 752 bits

PPS = (14.4 Kbps bit rate) / (288 bits) = 50 pps

Note: 288 bits = 36 bytes (voice payload) * 8 bits per byte

Bandwidth per call = total packet size (752bits) * 50 pps = 37.6 Kbps

As Fax BW is lower than Voice BW, the Voice BW requirement mandates the CG connection's attributes. This is true for all G.711 codecs.

B.5.5 FAX RTCP BW Calculation

RTCP BW is 10% of RTP: 10% of 37.6 Kbps is 3.76 Kbps.

B.5.6 QoS Profiles

B.5.6.1 CG QoS for RTP Traffic

The calculated bandwidth required for RTP traffic is 87.2 Kbps (equivalent to a Packet Size of 1744 bits, or 218 bytes). Thus, the CG 88 QoS Profile parameters are:

- Packet Size: 218 bytes
- Sample Interval: 20 msec

B.5.6.2 RT QoS for RTCP and VoIP Signaling

The required bandwidth is 10.72 Kbps (8.72 Kbps for Voice RTCP plus 2 Kbps for VoIP Signaling). We round it up to 611 Kbps. Thus, the required RT 11 QoS Profile parameters are:

- CIR: 11 Kbps
- CT: Short

B.5.6.3 BE QoS for Data

As stated, the recommended QoS Profile for Data is BE 64, with the following parameters:

- MIR: 64 Kbps
- CT: Medium

Glossary

AAA Authentication, Authorization, and Accounting (Pronounced "triple a."). A system (or several systems) that controls what resources users have access to, and keeps track of the activity of users over the network.

ANSI American National Standards Institute. A voluntary organization composed of corporate, government, and other members that coordinates standards-related activities, approves U.S. national standards, and develops positions for the United States in international standards organizations.

ARP Address Resolution Protocol. Internet protocol used to map an IP address to a MAC address. Defined in RFC 826.

ARQ Automatic Repeat reQuest. A communication technique in which the receiving device detects errors and requests retransmissions.

ASCII American Standard Code for Information Interchange. A code for representing English characters as numbers, with each letter assigned a number from 0 to 127.

ATM Asynchronous Transfer Mode. A network technology that dynamically allocates bandwidth. ATM uses fixed-size data packets and a fixed channel between two points for data transfer. ATM was designed to support multiple services such as voice, graphics, data, and full-motion video. It allows service providers to dynamically assign bandwidth to individual customers.

ATPC Automatic Transmit Power Control

AU Access Unit

AVU Air Ventilation Unit

BE Best effort. A service where neither throughput nor delay guarantees are provided. The subscriber unit sends requests for bandwidth in either random access slots or dedicated transmission opportunities. The occurrence of dedicated opportunities is subject to network load, and the subscriber unit cannot rely on their presence. Service parameters include Committed Time (CT) and Maximum Information Rate (MIR).

BER	Bit Error Rate. In a digital transmission, BER is the percentage of bits with errors divided by the total number of bits that have been transmitted, received or processed over a given time period.
BPSK	Binary Phase-Shift Keying. A data transfer technique. BPSK transmits data using two phase modulation signals, one phase representing a binary one, and the other representing a binary zero. The signal is divided into bits; their status is determined by the preceding wave. If the wave changes, for example, the signal is reversed.
BST	Base Station
BW	Bandwidth
BWA	Broadband Wireless Access
CBR	Constant Bit-Rate
CG	Continuous Grant. Also known as Unsolicited Grant Services (UGS), is tailored for carrying constant bit- rate (CBR) real-time services characterized by fixed size data packets on a periodic basis such as VoIP or E1/T1. Service parameters include unsolicited grant size (packet size) and normal grant interval (sample interval).
CIR	Committed Information Rate. The rate (in bits per second) at which a network guarantees to transfer information under normal conditions, averaged over a minimum increment of time.
cPCI	Compact Peripheral Component Interface. a new standard for computer backplane architecture and peripheral integration, defined and developed by the peripheral component interconnect (PCI) industrial computers manufacturers group (PICMG). Designed to provide rugged, high-density systems.
CPE	Customer Premise Equipment. Communications equipment that resides on the customer's premises.
CPLD	Complex Programmable Logic Device
CRC	Cyclical Redundancy Check. A common technique for detecting data transmission errors, in which the frame recipient calculates a remainder by dividing frame contents by a prime binary divisor and compares the calculated remainder to a value stored in the frame by the sending equipment.

CSMA/CD	Carrier Sense Multiple Access with Collision Detection. Media-access mechanisms wherein devices ready to transmit data first check the channel for a carrier. If no carrier is sensed for a specific period of time, a device can transmit. If two devices transmit at once, a collision occurs and is detected by all colliding devices. This collision subsequently delays retransmissions from those devices for some random length of time. Ethernet and IEEE 802.3 use CSMA/CD access.
CT	Committed Time. The time interval used for measuring average information transfer rates.
DHCP	Dynamic Host Configuration Protocol. A protocol for dynamically assigning IP addresses from a pre-defined list to nodes on a network. Using DHCP to manage IP addresses simplifies client configuration and efficiently utilizes IP addresses.
DIP Switch	A group of subminiature switches mounted in a Dual Inline Package compatible with standard integrated-circuit sockets.
DL	Down Link
DOS	Disk Operating System
DRAP	Dynamic Resources Allocation Protocol
DSCP	Differentiated Service Code Point, AKA DiffServ: An alternate use for the ToS byte in IP packets. Six bits of this byte are being reallocated for use as the DSCP field where each DSCP specifies a particular per-hop behavior that is applied to the packet.
DiffServ	See DSCP
DLI	Data Loss Indicator
EIR	Excess Information Rate. Specifies the excess rate (above the committed rate) of information that can be available to a user. The EIR is used by the traffic policing mechanism to prevent users from sending excess traffic to the network. (EIR = MIR-CIR).
EIRP	Equavalent Isotropic Radiated Power. The apparent power transmitted towards the receiver, if it is assumed that the signal is radiated equally in all directions. The EIRP is equal to the power (in dBm) at the antenna port, plus the power gained from the directivity of the antenna (in dBi).

EMC	Electro-Magnetic Compatibility. The capability of equipment or systems to be used in their intended environment within designed efficiency levels without causing or receiving degradation due to unintentional EMI (Electro Magnetic Interference). EMC generally encompasses all of the electromagnetic disciplines.
ETSI	European Telecommunications Standards Institute. A non-profit organization producing voluntary telecommunications standards used throughout Europe, some of which have been adopted by the EC as the technical base for Directives or Regulations.
FCC	Federal Communications Commission. A U.S. government agency that supervises, licenses, and controls electronic and electromagnetic transmission standards.
FDD	Frequency Division Duplex. Full duplex operation by using a pair of frequencies, one for transmission and one for reception.
FEC	Forward Error Correction. A method of communicating data that can corrects errors in transmission on the receiving end. Prior to transmission, the data is put through a predetermined algorithm that adds extra bits specifically for error correction to any character or code block. If the transmission is received in error, the correction bits are used to check and repair the data.
FFT	Fast Fourier Transform. An algorithm for converting data from the time domain to the frequency domain; often used in signal processing.
FTP	File Transfer Protocol. A protocol for exchanging files over the Internet. FTP uses the Internet's TCP/IP protocols to enable data transfer.
G.711	A 64 Kbps PCM voice-coding technique. Described in the ITU-T standard in its G-series recommendations.
G.723.1	A compression technique that can be used for compressing speech or audio signal components at a very low bit rate as part of the H.324 family of standards. This codec has two bit rates associated with it: 5.3 and 6.3 Kbps. The higher bit rate provides a somewhat higher quality of sound. The lower bit rate provides system designers with additional flexibility. Described in the ITU-T standard in its G-series recommendations.

G.729	A compression technique where voice is coded into 8 Kbps streams. There are two variations of this standard (G.729 and G.729 Annex A) that differ mainly in computational complexity; both provide speech quality similar to 32-kbps ADPCM. Described in the ITU-T standard in its G-series recommendations.
GPS	Global Positioning System. A system that uses satellites, receivers and software to allow users to determine their precise geographic position.
H.323	A protocol suite defined by ITU-T for voice transmission over internet (Voice over IP or VoIP). In addition to voice applications, H.323 provides mechanisms for video communication and data collaboration, in combination with the ITU-T T.120 series standards.
IB	In-Band
IDU	Indoor Unit
IEEE	Institute of Electrical and Electronics Engineers. IEEE (pronounced I-triple-E) is an organization composed of engineers, scientists, and students. The IEEE is best known for developing standards for the computer and electronics industry. In particular, the IEEE 802 standards for local-area networks are widely followed.
IEEE 802.1p	A QoS method - A three-bit value that can be placed inside an 802.1Q frame tag.
IEEE 802.16	Also known as WIMAX. A group of broadband wireless communications standards for metropolitan area networks (MANs) developed by a working group of the IEEE.
IEEE 802.16a	An extension of IEEE 802.16. 802.16a operates in the 2-11GHz frequency band over a theoretical maximum range of 31 miles with a theoretical maximum data transfer rate of 70Mbps.
IEEE 802.1Q	The IEEE 802.1Q standard defines the operation of VLAN Bridges that permit the definition, operation and administration of Virtual LAN topologies within a Bridged LAN infrastructure. The 802.1Q specification establishes a standard method for inserting VLAN membership information into Ethernet frames. A tag field containing VLAN (and/or 802.1p priority) information can be inserted into an Ethernet frame, carrying VLAN membership information.

IEEE 802.3 A Local Area Network protocol suite commonly known as Ethernet. Ethernet uses Carrier Sense Multiple Access bus with Collision Detection CSMA/CD. This method allows users to share the network cable. However, only one station can use the cable at a time. A variety of physical medium dependent protocols are supported.

IEEE 802.11b The IEEE 802.11b (also referred to as 802.11 High Rate or Wi-Fi). An extension to 802.11 standard for wireless Ethernet networks, that applies to wireless LANS and provides 11 Mbps transmission (with a fallback to 5.5, 2 and 1 Mbps) in the 2.4 GHz band.

IEEE 802.11g An extension to 802.11 standard for wireless Ethernet networks, that applies to wireless LANs and provides 20+ Mbps in the 2.4 GHz band.

IETF Internet Engineering Task Force. One of the task forces of the IAB (Internet Architecture Board), formally called the Internet Activities Board, which is the technical body that oversees the development of the Internet suite of protocols (commonly referred to as "TCP/IP").The IETF is responsible for solving short-term engineering needs of the Internet.

IF Intermediate Frequency. Radio communications systems modulate a carrier frequency with a baseband signal in order to achieve radio transmission. In many cases, the carrier is not modulated directly. Instead, a lower IF signal is modulated and processed. At a later circuit stage, the IF signal is converted up to the transmission frequency band.

IP Internet Protocol. The standard that defines how data is transmitted over the Internet. IP bundles data, including e-mail, faxes, voice calls and messages, and other types, into "packets", in order to transmit it over public and private networks.

IPsec Security Architecture for IP Network. IP Control Protocol (IPCP) and IPv6 Control Protocol IPsec provides security services at the IP layer by enabling a system to select required security protocols, determine the algorithm(s) to use for the service(s), and put in place any cryptographic keys required to provide the requested services. IPsec can be used to protect one or more "paths" between a pair of hosts, between a pair of security gateways, or between a security gateway and a host.

ISP Internet Service Provider

ITU-T	International Telecommunication Union - Telecommunications. An intergovernmental organization through which public and private organizations develop telecommunications. The ITU was founded in 1865 and became a United Nations agency in 1947. It is responsible for adopting international treaties, regulations and standards governing telecommunications. The standardization functions were formerly performed by a group within the ITU called CCITT, but after a 1992 reorganization the CCITT no longer exists as a separate entity.
LAN	Local area Network. A computer network limited to a small geographical area, such as a single building. The network typically links PCs as well as shared resources such as printers.
LED	Light Emitting Diode.
μBST	Micro Base Station
MAC	Media Access Control. The lower of the two sub-layers of the data link layer defined by the IEEE. The MAC sub-layer handles access to shared media, such as whether token passing or contention will be used.
MAC Address	Standardized data link layer address that is required for every port or device that connects to a LAN. Other devices in the network use these addresses to locate specific ports in the network and to create and update routing tables and data structures. MAC addresses are 6bytes long and are controlled by the IEEE.
MAN	Metropolitan Area Network. A data network designed for a town or city. In terms of geographic breadth, MANs are larger than local-area networks (LANs), but smaller than wide-area networks (WANs).
MCS	Multipoint Communications Systems. Applications licensed at 2500 MHz in Canada. A wide variety of applications are possible, including one-way and two-way transmission and a diversity of distribution capacities.
MD5	A Message-Digest algorithm developed by RSA Laboratories used for creating unforgeable digital signatures. MD5 produces an 128-bit (16 byte) message digest. Most existing software applications that handle certificates only support MD5.
MIB	Management Information Base. A database of objects that can be monitored by a network management system. SNMP uses standardized MIB formats that allow any SNMP tools to monitor any device defined by a MIB.

MIR Maximum Information Rate. Specifies the maximum rate of information that can be available to a user. The MIR is used by the traffic policing mechanism to prevent users from sending excess traffic to the network.

MMDS Multichannel Multipoint Distribution Service. MMDS is a licensed wireless service that has the capability to provide broadband access. MMDS operates in several parts of the 2 GHz spectrum.

MRRC Maximum Receive Ratio Combining.

NA Not Available or Not Applicable

NAS Network Access Server. A Network Access Server operates as a client of RADIUS. The client is responsible for passing user information to designated RADIUS server(s(, and then acting on the response.

NAT Network Address Translation. Basic Network Address Translation (Basic NAT) is a method by which IP addresses are mapped from one group to another, transparent to end users. Network Address Port Translation, or NAPT is a method by which many network addresses and their TCP/UDP ports are translated into a single network address and its TCP/UDP ports. Together, these two operations, referred to as traditional NAT, provide a mechanism to connect a realm with private addresses to an external realm with globally unique registered addresses.

NIC Network Interface Card. An expansion board you insert into a computer (or a built-in component) that enables the computer to connect to a network. Most NICs are designed for a particular type of network, protocol, and media, although some can serve multiple networks.

NIU Network Interface Unit

NLOS Non Line Of Sight. A term referring to wireless services which don't require a clear open path between sites.

NMS Network Management System. A system responsible for managing at least part of a network. An NMS is generally a reasonably powerful and well-equipped computer, such as an engineering workstation. NMSs communicate with agents to help keep track of network statistics and resources.

NOC Network Operations Center. The physical space from which a typically large telecommunications network is managed, monitored and supervised.

NPU Network Processing Unit

NRT Non Real Time. is very similar to the Real-Time polling service except that connections may utilize random access transmit opportunities for sending bandwidth requests. These Non Real Time Variable Bit Rate (NRT-VBR) services, such as file transfer and Internet access with a minimum guaranteed rate, are characterized by requirement for a guaranteed rate, but can tolerate longer delays and are rather insensitive to jitter. Service parameters include CIR, Committed Time (CT), and MIR that limit the rate as otherwise bandwidth intensive services may expand to occupy full bandwidth.

OA&M Operation, Administration & Maintenance. Provides the facilities and the personnel required to manage a network.

ODU Outdoor Unit

OFDM Orthogonal Frequency Division Multiplexing: A method for multiplexing signals, which divides the available bandwidth into a series of frequencies known as tones. Orthogonal tones do not interfere with each other when the peak of one tone corresponds with the null. The rapid switching, frequency-hopping technique is intended to allow more robust data service.

OFDMA Orthogonal Frequency Division Multiple Access. It's a logical extension of OFDM and a modulation/multiple access technique. OFDMA divides a signal into sub-channels (i.e. groups of carriers), with each sub-channel (or several sub-channels) being allocated to a different subscriber.

OOB Out-Of-Band

PAP Password Authentication Protocol. A means of authenticating passwords which is defined in RFC 1334. PAP uses a two-way handshaking procedure. The validity of the password is checked at login.

PER Packet Error Rate. In a digital transmission, PER is the percentage of packets with errors divided by the total number of packets that have been transmitted, received or processed over a given time period.

PHY PHYsical Layer. The physical, or lowest, layer of the OSI Network Model. In a wireless network, the PHY defines parameters such as data rates, modulation method, signaling parameters, transmitter/receiver synchronization, etc. Within an actual radio implementation, the PHY corresponds to the radio front end and baseband signal processing sections.

PIU	Power Interface Unit
POTS	Plain Old Telephone System. A basic analog telephone equipment.
PSU	Power Supply Unit
PPPoE	Point-to-Point Protocol over Ethernet. PPPoE relies on two widely accepted standards: PPP and Ethernet. PPPoE is a specification for connecting the users on an Ethernet to the Internet through a common broadband medium, such as a single DSL line, wireless device or cable modem. All the users over the Ethernet share a common connection, so the Ethernet principles supporting multiple users in a LAN combines with the principles of PPP, which apply to serial connections.
QAM	Quadrature Amplitude Modulation. A technique used in wireless applications to double the available bandwidth by combining two amplitude-modulated signals. The two combined signals differ in phase by 90 degrees; this technique doubles the bandwidth by combining the two signals at the source before transmission, transmitting digital data at a rate of 4 bits per signal change.
QoS	Quality of Service. Measure of performance for a transmission system that reflects its transmission quality and service availability.
QPSK	Quadrature Phase Shift Keying. A data transfer technique used in coaxial cable networks that sends data using modulating signals. Four different phases represent data, with each signal's information determined by the signal before it. For example, if a phase stays the same from one signal to the other, the information has not changed.
RADIUS	Remote Authentication Dial-In User Service, an authentication and accounting system used by many Internet Service Providers (ISPs). When you connect to the system you must enter your username and password. This information is passed to a RADIUS server, which checks that the information is correct, and then authorizes access to the system.
RF	Radio frequency. An AC signal of high enough frequency to be used for wireless communications.
RFC	Request For Comments. The name of the result and the process for creating a standard on the Internet. New standards are proposed and published on the Internet, as a Request For Comments. The proposal is reviewed by the Internet Engineering Task Force.

RoHS Restriction of the use of certain Hazardous Substances in electrical and electronic equipment, reference EC Directive 2002/95/EC of 27 January 2003.

RSA A public-key encryption technology developed by RSA Data Security, Inc. The acronym stands for Rivest, Shamir, and Adelman, the inventors of the technique. The RSA algorithm is based on the fact that there is no efficient way to factor very large numbers. Deducing an RSA key, therefore, requires an extraordinary amount of computer processing power and time. The RSA algorithm has become the de facto standard for industrial-strength encryption, especially for data sent over the Internet.

RSSI Received Signal Strength Indicator. A signal or circuit that indicates the strength of the incoming (received) signal in a receiver.

R&TTE Radio & Telecommunications Terminal Equipment. The R&TTE Directive 1999/5/EC governs the marketing and use of R&TTE equipment. With the exception of a few categories of equipment, the Directive covers all equipment, which uses the radio frequency spectrum. It also covers all terminal equipment attached to public telecommunication networks.

RT Real Time. Real Time service is designed to meet the needs of Real Time Variable Bit Rate (RT-VBR) like services characterized by requirements for guaranteed rate and delay such as streaming video or audio. These services are dynamic in nature, but offer periodic dedicated requests opportunities to meet real-time requirements. Because the subscriber equipment issues explicit requests, the protocol overhead and latency is increased, but capacity is granted only according to the real needs of the connection. Service parameters include CIR and CT.

RTCP RTP Control Protocol. A protocol that monitors the QoS of an RTP connection and conveys information about the on-going session.

RTP Real Time Protocol. An Internet protocol for transmitting real-time data such as audio and video. RTP itself does not guarantee real-time delivery of data, but it does provide mechanisms for the sending and receiving applications to support streaming data. Typically, RTP runs on top of the UDP protocol, although the specification is general enough to support other transport protocols.

Rx Receive

SIP Session Initiation Protocol. An application-layer control IETF protocol that can establish, modify, and terminate multimedia sessions such as Internet telephony calls (VoIP). SIP can also invite participants to already existing sessions, such as multicast conferences. Media can be added to (and removed from) an existing session. SIP transparently supports name mapping and redirection services, which supports personal mobility - users can maintain a single externally visible identifier regardless of their network location.

SLA Service Level Agreement. A contract between a service provider and the end user, which stipulates and commits the service provider to a required level of service. An SLA relates to issues such as specified level of service, support options, enforcement or penalty provisions for services not provided, a guaranteed level of system performance as relates to downtime or uptime, a specified level of customer support and what software or hardware will be provided and for what fee.

SME Small and Medium-sized Enterprises. SMEs are small-scale entrepreneurial private enterprises: they are usually defined as having less than 250 employees, but most have far fewer.

SNAP Sub Network Access Protocol

SNMP Simple Network Management Protocol. A network management protocol that provides a means to monitor and control network devices, and to manage configurations, statistics collection, performance, and security. SNMP works by sending messages, called protocol data units (PDUs), to different parts of a network. SNMP-compliant devices, called agents, store data about themselves in Management Information Bases (MIBs) and return this data to the SNMP requesters.

SNR Signal to Noise Ratio. The ratio of the amplitude of a desired analog or digital data signal to the amplitude of noise in a transmission channel at a specific point in time. SNR is typically expressed logarithmically in decibels (dB). SNR measures the quality of a transmission channel or a signal over a network channel. The greater the ratio, the easier it is to identify and subsequently isolate and eliminate the effects of noise. SNR also is abbreviated as S/N.

SOHO	Small Office Home Office. A term that refers to the small or home office environment and the business culture that surrounds it. Typically it refers to an office or business with ten or fewer computers and/or employees.
SRC	Source
SU	Subscriber Unit
TCP	Transmission Control Protocol. Connection-oriented transport layer protocol that provides reliable full-duplex data transmission. TCP is the part of the TCP/IP suite of protocols that is responsible for forming data connections between nodes that are reliable, as opposed to IP, which is connectionless and unreliable.
TCP/IP	Transmission Control Protocol/Internet Protocol. A set of protocols developed by the U.S. Department of Defense to allow communication between dissimilar networks and systems over long distances. TCP/IP is the de facto standard for data transmission over networks, including the Internet.
TDD	Time Division Duplex is a duplexing technique dividing a radio channel in time to allow downlink operation during part of the frame period and uplink operation in the remainder of the frame period.
TDM	Time Division Multiplexing. Technique in which information from multiple channels can be allocated bandwidth on a single link based on pre-assigned time slots. Bandwidth is allocated to each channel regardless of whether the station has data to transmit.
TFTP	Trivial File Transfer Protocol. Simplified version of FTP that allows files to be transferred from one computer to another over a network, usually without the use of client authentication.
TTL	Time To Live
Tx	Transmit
U	A unit for measuring the height in rack cabinets. 1U = 1.75 inches.
UDP	User Datagram Protocol. Connectionless transport layer protocol in the TCP/IP protocol stack. UDP is a simple protocol that exchanges datagrams without acknowledgments or guaranteed delivery, requiring that error processing and retransmission be handled by other protocols. UDP is defined in RFC 768.
UL	Up Link

UTC Coordinated Universal Time. The reference for the official time used by all countries in the world, and it is independent from the time zones. The modern implementation of Greenwich Mean Time.

VLAN Virtual Local Area Network. A group of devices on one or more LANs that are configured with the same VLAN ID so that they can communicate as if they were attached to the same wire, when in fact they are located on a number of different LAN segments. Used also to create separation between different user groups.

VLSI Very Large Scale Integration. The process of placing thousands (or hundreds of thousands) of electronic components on a single chip.

VoIP Voice over Internet Protocol. Provides an advanced digital communications network that bypasses the traditional public switched telephone system and uses the Internet to transmit voice communication. VoIP enables people to use the Internet as the transmission medium for telephone calls by sending voice data in packets using IP rather than by traditional circuit switched transmissions of the PSTN.

VPL Virtual Private Link. A virtual connection between two points on the network, such as a base station and a service provider or corporate network. Identified by the VPL ID, with functionality that is similar to VLAN ID (VLAN on the backbone network).

VPN Virtual Private Network. A private network of computers that's at least partially connected by public lines. A good example would be a private office LAN that allows users to log in remotely over the Internet (an open, public system). VPNs use encryption and secure protocols like PPTP to ensure that data transmissions are not intercepted by unauthorized parties.

WAN Wide Area Network. A computer network that spans a relatively large geographical area. Wide area networks can be made up of interconnected smaller networks spread throughout a building, a state, or the entire globe.

WCS Wireless Communications Services. The variety of services available using frequencies in the 2.3 GHz band for general fixed wireless use.

WEEE Waste Electronic and Electrical Equipment. The purpose of Directive 2002/96/EC on waste electrical and electronic equipment (WEEE) is, as a first priority, the prevention of waste electrical and electronic equipment (WEEE), and in addition, the reuse, recycling and other forms of recovery of such wastes so as to reduce the disposal of waste. It also seeks to improve the environmental performance of all operators involved in the life cycle of electrical and electronic equipment, e.g. producers, distributors and consumers and in particular those operators directly involved in the treatment of waste electrical and electronic equipment.

WIMAX The name commonly given to the IEEE 802.16 standard. Specifications for fixed broadband wireless metropolitan access networks (MANs) that use a point-to-multipoint architecture. WIMAX supports very high bit rates in both uploading to and downloading from a base station up to a distance of 30 miles.

Index

Numerics

1 POTS Advanced VoIP G.711 Pre-Configured Profile, 211
1 POTS Advanced VoIP G.729 Pre-Configured Profile, 211
1 POTS Basic VoIP G.711 Pre-Configured Profile, 211
1 POTS Basic VoIP G.729 Pre-Configured Profile, 210
802.1p Marking Mode, 194

A

Access Unit Indoor Module, 44
Access VLAN, 188
Accounting
    Activity Status, 100
    Add Server, 100
    Delete Selected Server, 101
    IP Address, 100
    Operation Status, 100
    Select Server, 100
    Server Status, 100
    Show All, 100
    Show Selected Server, 101
    Statistics, 101
    UDP Port, 100
Accounting Parameters, 99
Action
    SU SW File, 159
Active Alarms
    Show, 91
Active Rule Type, 206
Active Voice Calls, 133
Activity Status
    Accounting, 100
    Authentication, 97
Add
    Accounting Server, 100
    Authentication Server, 97
    Authorized Manager, 119
    New SU, 172
    ODU, 129
    Radio Cluster, 125
Add New SU, 172
Add Server
    Accounting, 100
    Authentication, 97
Address, 161
Admin Status
    Channel, 145
    Interface Filtering, 206
    ODU, 130
    Service, 188
    Subscriber, 185
    Trap Configuration, 93
Administrator Password, 109
Advanced Service Mode, 176, 177
Air Ventilation Unit, 52
Alarms and Traps, 91
Altitude, 106
Antenna Selection, 157
ARQ Enable/Disable, 141
Associated ODU, 144
Associated Radio Cluster, 129
ATPC Enable/Disable, 88
ATPC Parameters, 88
AU
    Bandwidth, 142
    Base Station ID Parameters, 141
    Configuration Menu, 140
    Configured Operation, 132
    Configured SU Operation, 133
    Configured SU SW File Name, 132

Configured SU SW Version, 133
Configured SW File Name, 132
Configured SW Version, 132
Default SW File (Adv-Si), 135
Default SW File (Std), 134
IDU Type, 133
MAC Parameters, 141
Maximum Number of Voice Calls, 147
Menu, 132
Multirate Parameters, 146
Operation Mode, 133
Performance Monitoring, 148
Phy Parameters, 142
Reset Unit, 138
Select, 135
Set Factory Defaults, 138
Show Summary, 132
SU SW File, 140
SW Download Status, 132
SW File, 139
SW Files in NPU, 134
SW Versions Control, 138
Unit Control, 138
Voice Parameters, 147
AU IDU Type, 133
AU Slot #
Menu, 136
Show, 136
AU Wireless Port Counters, 148
AU-IDU, 44
Ejecting, 49
Inserting, 48
LEDs, 45
AU-ODU
Connectors, 34
Installation, 28
LEDs, 34
Authentication
Activity Status, 97
Add Server, 97
Delete Selected Server, 98
IP Address, 97
Operation Status, 97
Select Server, 98
Server Status, 98
Show All, 97
Show Selected Server, 98
Statistics, 98
UDP Port, 98
Authentication Parameters, 97
Authorized Managers
Add, 119
IP Address, 119
Parameters, 119
Read Community, 119
Select, 119
Send Traps, 119
Show All, 119
Write Community, 120
AVU, 52
LEDs, 52
Replacing, 52

B

Back Panel Port Counters, 148
Backup File
Creating, 112
Filtering, 112
Full, 112
Profiles, 112
Profiles and Services, 112
Traps, 112
Upload/Download, 113
Bandwidth
AU, 142
SU, 162
Base Station
Chassis, 38
Chassis Slot Assignment, 87
Configuration Menu, 87
Installation, 37
Power Cable, 41
Power Requirements, 39
Show, 86

Base Station ID
AU, 141
SU, 162
Base Station ID Mask, 162
Base Station Licenses, 103
Basic Parameters, 64
BE, 200
Best BST/AU Parameters, 166
Best BST/AU Support, 167
Best BST/AU Table, 167
Best Effort (BE) Qos Profile, 200
Bridge Aging Time
NPU, 120
SU, 165
Bridging Parameters (SU), 165
Broadcast Relaying, 197
Bronze LAN-to-LAN Pre-Configured Profile, 210
Bronze Teleworking Pre-Configured Profile, 210
Burst Error Rate Counters
AU, 149
SU, 171

C

Calculated Local Date and Time, 106
Cell ID, 89
Cell Parameters, 88
CG, 200
Chain Number, 104
Chain Parameters, 104
Change Password, 109
Channel
Admin Status, 145
Associated ODU, 144
Associated Radio Cluster, 145
Downlink (Tx) Frequency, 144
Frequency Band, 146
Select, 144
Tx Power, 145
Uplink (Rx) Frequency, 146
Chassis, 38
Slot Assignment, 87
CIR, 202
Clear All Configured AU SW Files, 135
Clear All Configured SU SW Files for this AU, 140
Clock Parameters, 90
Committed Information Rate, 202
Committed Time, 201
Configuration
AU, 140
Base Station Parameters, 87
NPU, 114
SU, 160
Configured Operation
AU, 132
SU, 151
Configured SU Operation
AU, 133
Configured SU SW File Name
AU, 132
Configured SU SW Version
AU, 133
Configured SW File Name
AU, 132
SU, 150
Configured SW Version
AU, 132
SU, 150
Connectors
AU-ODU, 34
GPS Adapter, 59
NPU, 47
ODU Power Feeder, 55
Continuous Grant (CG) QoS Profile, 200
Counters
AU Ports, 148
Back Panel Port, 148
Burst Error Rate (AU), 149
Burst Error Rate (SU), 171
Data Port, 121
Management Port, 123
Service, 188
SU Ethernet Port, 170
SU Port, 170
Wireless Port (AU), 148

Wireless Port (SU), 170
Country, 161
CPEs License Bank, 102
Create Backup, 112
CT, 201

D

Data Port
Auto Negotiation Option, 118
Gateway, 117
IP Address, 117
Management Traffic Enable/Disable, 118
Management VLAN, 117
Parameters, 117
Speed, 118
Subnet Mask, 117
Data Port Counters, 121
Days, 92
DC Power Cable
ODU Power Feeder, 56
Debug Stream, 120
Default Action
Interface Filtering, 206
Default L2/Voice Service Profile, 184
Default PPPoE Service Profile, 184
Default SW File (Adv-Si)
AU, 135
SU, 153
Default SW File (Std)
AU, 134
SU, 153
Defining Local Service Profiles, 208
Defining Local Services, 209
Delete
Accounting Server, 101
AU SW File (in NPU), 135
Authentication Server, 98
ODU, 129
SU, 172
SU SW File, 154
Dest Subnet, 115
Dest Subnet Mask, 115
Device Location, 88
Device Name, 87
Discrete Frequencies, 169
DL-UL Ratio, 90
Downlink (Tx) Frequency (Channel), 144
Downlink Basic Rate (AU), 147
Downlink QoS Profiles, 199
Downlink Upper Priority Limits, 199
DRAP
Description, 175
DRAP TTL Retries, 120
DSCP Marking Mode, 194
Duplex Mode, 89
Duplex Parameters, 89
Duplicate Sessions, 178
Duplicate SU Name, 151

E

Eject
AU-IDU, 49
NPU, 49
PIU (with HOT SWAP), 49
PIU (without HOT SWAP), 49
PSU, 49
Enable/Disable Limit on Number of Supported Devices (SU), 165
Ethernet Port (SU), 164
Ethertype (L2 Filtering Rule), 203
External 16MHz Clock, 91
External 1PPS Clock, 90

F

File Loading Procedure, 233
Filtering Rules
Menu, 202
First Name, 185
Forwarding Rule
Broadcast Relaying, 197
Definition, 173
Menu, 196
Multicast QoS Profile, 198
Multicast VLAN ID, 197

Name, 196
Service Type, 196
Unicast Relaying, 196
Unknown Forwarding Policy, 197
Forwarding Rule Class, 198
Forwarding Rule Name, 196
Frequency Bands File, 130
Frequency Bands Groups, 130
Frequency Scanning Parameters, 167
From Network Filtering, 205
From Wireless Filtering, 205

G

Gateway
Data Port, 117
Management Port, 115
General Service Parameters
Default L2/Voice Service Profile, 184
Default PPPoE Service Profile, 184
Menu, 184
Service Mode, 184
Show, 184
Update, 184
Global Profiles, 176
Gold LAN-to-LAN Pre-Configured Profile, 210
Gold Teleworking Pre-Configured Profile, 210
GPS Adapter
Connectors, 59
Installation, 58
LEDs, 60, 74
GPS Info, 105
GPS Protocol, 104
GPS Supported, 104
Grace Licenses, 103

H

Hold Over Passed Timeout, 105
HOT SWAP, 39
Hybrid VLAN Mode, 187

I

IDU Type, 151
IF Cables, 30
Insert
AU-IDU, 48
PIU (with HOT SWAP), 48
PIU (without HOT SWAP), 49
PSU, 49
Inserting
NPU, 48
Installation, 27
AU-ODU, 28
Base Station, 37
GPS Adapter, 58
ODU Power Feeder, 54
Installer Password
NPU, 109
SU, 165
Interface Filtering
Active Rule Type, 206
Admin Status, 206
Default Action, 206
From Network Filtering, 205
From Wireless Filtering, 205
L2 Filtering Rules List, 205
L3/L4 Filtering Rules List, 205
Menu, 205
Interface Type, 157
Internet Access L2 Pre-Configured Profile, 210
Internet Access PPPoE Pre-Configured Profile, 210
IP Address
Accounting Server, 100
Authentication Server, 97
Authorized Managers, 119
Data Port, 117
L3/L4 Filtering Rule, 204
Management Port, 115
IP Address Direction (L3/L4 Filtering Rule), 204
IP Address Mask (L3/L4 Filtering Rule), 204

K

Keep Alive Timeout, 96

L

L2 Filtering Rules
- Ethertype, 203
- MAC Address, 203
- MAC Address Direction, 203
- MAC Address Mask, 203
- Menu, 203
- Rule Name, 203

L2 Filtering Rules List, 205
L2 Service, 174
L3/L4 Filtering Rules
- IP Address, 204
- IP Address Direction, 204
- IP Address Mask, 204
- Menu, 204
- Port, 205
- Port Direction, 205
- Protocol, 204
- Rule Name, 204

L3/L4 Filtering Rules List, 205
Last Name, 185
Latitude, 106
LEDs
- AU-IDU, 45
- AU-ODU, 34
- AVU, 52
- GPS Adapter, 60, 74
- NPU, 47
- ODU Power Feeder, 56, 74
- PIU, 41
- PSU, 43

Local Profiles, 176
Longitude, 105
Loop, 151

M

MAC Address (L2 Filtering Rule), 203
MAC Address Direction (L2 Filtering Rule), 203
MAC Address Mask (L2 Filtering Rule), 203
MAC Addresses Deny List, 208
MAC Parameters
- AU, 141
- SU, 161

Management Port
- Dest Subnet, 115
- Dest Subnet Mask, 115
- Gateway, 115
- IP Address, 115
- Management Traffic Enable/Disable, 116
- Parameters, 115
- Subnet Mask, 115

Management Port Counters, 123
Management Traffic Enable/Disable
- Data Port, 118
- Management Port, 116

Management VLAN (Data Port), 117
Marking Mode
- 802.1p, 194
- DSCP, 194
- Transparent, 193

Max Tx Power, 128
Maximum Cell Radius, 141
Maximum Information Rate, 202
Maximum Number of Retries, 96
Maximum Number of Supported Devices
- SU, 165

Maximum Number of Voice Calls
- AU, 147
- Service Profile, 195

Minimum Severity, 91
MIR, 202
Monitor
- Via Telnet, 81
- Via the MON Port, 80

Monitor Inactivity Timeout, 113
Monitor Password, 109
Multi Channel
- Show Summary, 143

Multi Channel Parameters, 143
Multicast QoS Profile, 198

Multicast VLAN ID, 197
Multirate Algorithm, 146
Multirate and ATPC Parameters (SU), 163
Multirate Enable/Disable (AU), 147
Multirate Parameters
    AU, 146

N

Navigation Processor SW Version, 106
Network Processing Unit, 46
Non Real Time (NRT) QoS Profile, 200
NPU, 46
    Bridge Aging Time, 120
    Configuration Menu, 114
    Connectors, 47
    Ejecting, 49
    Inserting, 48
    LEDs, 47
    Menu, 107
    Performance Monitoring, 121
    Replacing, 53
    Reset Unit, 110
    Run from Shadow, 112
    Set as Main, 112
    Set Factory Defaults, 110
    Show, 107
    SW Versions Control, 110
    Unit Control, 109
NRT, 200
Number of Gateways, 151
Number Of Received Satellites, 105

O

ODU
    Add, 129
    Admin Status, 130
    Associated Radio Cluster, 129
    Configured ODU Frequency Band, 129
    Delete, 129
    ID, 129
    Menu, 127
    Parameters, 129
    Select, 128
    Show, 128
    Show Summary, 127
    Tx Power, 129
    Update, 128
ODU Power Feeder
    Connectors, 55
    Installation, 54
    LEDs, 56, 74
Operation Mode, 133
    SU, 155
Operation Status
    Accounting, 100
    Authentication Server, 97
    Service, 188
Operator ID, 89
Optimal Uplink RSSI, 88
Organization Name, 161

P

Packet Size, 202
Password
    Defaults (NPU), 110
    NPU, 109
Performance
    Service, 188
Performance Monitoring
    AU, 148
    NPU, 121
    SU, 170
Permanent, 177
Permanent SU
    Definition, 176
Phy Parameters
    AU, 142
    SU, 162
PIU, 39
    LEDs, 41
PIU (with HOT SWAP)
    Ejecting, 49
    Inserting, 48
PIU (without HOT SWAP)

Ejecting, 49
Inserting, 49
Port (L3/L4 Filtering Rule), 205
Port Direction (L3/L4 Filtering Rule), 205
Ports Counters
AU, 148
Power Cable, 41
Power Interface Unit, 39
Power Requirements, 39
Power Supply Unit, 42
PPPoE Service, 174
Pre-configured Profiles, 210
Preferred BST/AU ID, 167
Preferred BST/AU ID Mask, 167
Priority Classifier
Definition, 173
Downlink QoS Profiles, 199
Downlink Upper Priority Limits, 199
Menu, 198
Name, 198
Priority Type, 198
Uplink QoS Profiles, 199
Uplink Upper Priority Limits, 199
Priority Classifier Name, 198
Priority Marking Mode, 192
Priority Marking Value, 195
Priority Type, 198
Profiles
Pre-configured, 210
Protocol (L3/L4 Filtering Rule), 204
PSU, 42
Ejecting, 49
Inserting, 49
LEDs, 43

Q

QoS Profile
Best Effort (BE) Service Type, 200
CIR, 202
Continuous Grant (CG) Service Type, 200
CT, 201
Menu, 200
MIR, 202
Name, 201
Non Real Time (NRT) Service Type, 200
Packet Size, 202
QoS Type, 201
Real Time (RT) Service Type, 200
Sample Interval, 202
QoS Profile Class, 202
QoS Profile Name, 201
QoS Type, 201
Quick Service Mode, 176, 177
quickynikinyoky, 177

R

Radio Cluster
Add, 125
ID, 125
Location, 125
Menu, 124
Name, 125
Parameters, 125
Sector Beam Width, 126
Sector Heading, 126
Select, 125
Show Summary, 124
RADIUS General Parameters, 95
RADIUS Parameters, 94
Read Community (Authorized Manager), 119
Real Time (RT) Qos Profile, 200
Registration Parameters
SU, 161
Replace
AVU, 52
NPU, 53
Reset Unit
AU, 138
NPU, 110
SU, 158
Retry Interval, 96
RT, 200
Run from Shadow
AU, 139

NPU, 112
SU, 160

S

Sample Interval, 202
Sector Heading, 126
Sector ID, 141
Select
AU, 135
Authorized Managers, 119
Channel, 144
ODU, 128
Radio Cluster, 125
Select by MAC Address
SU, 154
Select by Name
SU, 154
Select Server
Accounting, 100
Authentication, 98
Send Traps (Authorized Manager), 119
Server Status
Accounting, 100
Authentication, 98
Service
Access VLAN, 188
Admin Status, 188
Best Effort, 200
Continuous Grant, 200
Definition, 173
General Parameters, 184
Generic VoIP (non DRAP-based), 176
Hybrid VLAN Mode, 187
L2, 174
Menu, 185
Name, 186
Non Real Time, 200
Operation Status, 188
Performance, 188
PPPoE, 174
Real Time, 200
SU MAC Address, 186
Types, 174
VLAN Classification Mode, 187
VLAN List, 186
Service Fault Status, 151
Service Mode, 184
Service Profile
Definition, 173
Maximum Number of Voice Calls, 195
Menu, 190
Name, 190
Priority Marking Mode, 192
Priority Marking Value, 195
Service Type, 191
VLAN Transparency Mode, 191
VPL ID, 192
Service Profile Class, 196, 199
Service Profile Name, 190
Service Profiles
Defining Local Service Profiles, 208
Service Type
L2, 174
PPPoE, 174
Voice, 175
Services
Defining Local Services, 209
Voice (DRAP-based), 175
Session Timeout, 178
Set as Main
AU, 140
NPU, 112
SU, 160
Set Factory Defaults
AU, 138
NPU, 110
SU, 158
Set Rates, 164
Severity
Trap Configuration, 93
Shared Secret, 96
Show
Accounting Server, 101
AU Slot #, 136

Authentication Server, 98
Base Station Licenses, 103
Base Station Parameters, 86
CPEs License Bank Status, 102
Files in NPU, 134
General Service Parameters, 184
Grace Licenses, 103
NPU Parameters, 107
ODU, 128
SU #, 154
Temporary Grace Licenses, 103
Show Active Alarms, 91
Show All
Accounting Servers, 100
Authentication Servers, 97
Authorized Managers, 119
Show MAC Addresses Behind SU, 172
Show Summary
AU, 132
Multi Channel, 143
ODU, 127
Radio Cluster, 124
SU, 150
SUs by AU, 152
Show Traps Log, 92
Signal Processor SW Version, 106
Silver LAN-to-LAN Pre-Configured Profile, 210
Silver Teleworking Pre-Configured Profile, 210
Smart Card Status, 157
Software Upgrade, 231
Speed
Data Port, 118
Statistics
Accounting, 101
Authentication, 98
Stop Tx After Hold Over Timeout, 105
SU
Add New SU, 172
Address, 161
Bandwidth, 162
Base Station ID, 162
Base Station ID Mask, 162
Bridge Aging Time, 165
Bridging Parameters, 165
Configuration Menu, 160
Configured Operation, 151
Configured SW File Name, 150
Configured SW Version, 150
Country, 161
Default SW File (Adv-Si), 153
Default SW File (Std), 153
Delete, 172
Delete SW File, 154
Duplicate SU Name, 151
Ethernet Port, 164
IDU Type, 151
Installer Password, 165
Loop, 151
MAC Parameters, 161
Menu, 150
Multirate and ATPC Parameters, 163
Number of Gateways, 151
Operation Mode, 155
Organization Name, 161
Performance Monitoring, 170
Phy Parameters, 162
Registration Parameters, 161
Reset Unit, 158
Select by MAC Address, 154
Select by Name, 154
Service Fault Status, 151
Set Factory Defaults, 158
Set Rates, 164
Show Summary, 150
Status, 158
SU Name, 161
SW Download Status, 151
SW Files in NPU, 152
SW Versions Control, 158
Unit Control, 157
Uplink (Tx) Frequency, 163
Voice/Networking Gateways, 164
SU #
Menu, 154

Show, 154
SU Ethernet Port Counters, 170
SU MAC Address
Service, 186
SU MAC Control Number, 155
SU Name, 161
SU Ports Counters, 170
SU Status, 158
SU SW File
AU, 140
SU Wireless Port Counters, 170
Subnet Mask
Data Port, 117
Management Port, 115
Subscriber
Admin Status, 185
Definition, 173
Description, 185
First Name, 185
Last Name, 185
Menu, 184
Name, 184
Subscriber Name, 185
SUID, 150
Suppression Interval, 93
SW Download Status
AU, 132
SU, 151
SW File
AU, 139
SU, 159
SW Files in NPU
AU, 134
SU, 152
SW Versions Control
AU, 138
NPU, 110
SU, 158

T

Temporary, 177
Temporary Grace Licenses, 103
Temporary SU
Definition, 176
Termination Action, 178
Time Zone Offset From UTC, 105
Transparent Marking Mode, 193
Trap Configuration, 92
Admin Status, 93
Severity, 93
Suppression Interval, 93
Traps
Display Filter, 91
Log, 92
Traps Display Filter
Days, 92
Minimum Severity, 91
Tx Power (ODU), 129

U

UDP Port
Accounting Server, 100
Authentication, 98
Unicast Relaying, 196
Unit Control
AU, 138
NPU, 109
SU, 157
Unknown Forwarding Policy, 197
Update
General Service Parameters, 184
ODU, 128
Uplink (Tx) Frequency
SU, 163
Uplink Basic Rate (AU), 147
Uplink QoS Profiles, 199
Uplink Upper Priority Limits, 199

V

VLAN Classification Mode, 187
VLAN List, 186
VLAN Transparency Mode, 191
Voice Parameters (AU), 147
Voice Service, 175

Voice/Networking Gateways (SU), 164
VoIP 1V Pre-Configured Profile, 210
VoIP 2V Pre-Configured Profile, 210
VPL ID, 192

W

Write Community (Authorized Manager), 120