Evaluation of Compliance with FCC-Specified Guidelines for Human Exposure to Radio Frequency Electromagnetic Fields

on the

4 Watts CDPD Modem
Model: MP210V-GPS
for
Sierra Wireless, Inc.

Date of Test: December 17-18, 1999

Job # J99032362

Total No. of Pages Contained in this Report: 9 + data pages

All services undertaken are subject to the following general policy: Reports are submitted for exclusive use of the client to whom they are addressed. Their significance is subject to the adequacy and representative character of the samples and to the comprehensiveness of the tests, examinations or surveys made. No quotations from reports or use of Intertek Testing Services' name is permitted except as expressly authorized by Intertek Testing Services in writing.

FCC 2.1091 & ANSI 95.1-1992

VERIFICATION OF COMPLIANCE
No. J99032362

Verification is hereby issued to the named APPLICANT and is VALID ONLY for the Equipment identified hereon for use under the rules and regulations listed below.

Equipment Under Test:	4 Watts CDPD Modem (capable of AMPS operation And equipped with GPS receiver)
Trade Name:	Sierra Wireless
Model No.:	MP210V-GPS
Serial No.:	206-00094808
Applicant:	Sierra Wireless, Inc.
Contact:	Mr. Hugo LeBlanc
Address:	13575 Commerce Parkway, Suite 150 Richmond, BC V6V 2L1
Tel. number:	(604) 232-1421
Fax number:	(604) 231-1109
Applicable Regulation:	FCC 2.1091 & ANSI C95.1:1992
Equipment Class:	Uncontrolled Environments
Date of Test:	December 17-18, 1999

We attest to the accuracy of this report:

For Xi-Ming Yang
Test Engineer

David Chernomordik
EMC Manager

Table of Contents

1.0 **Introduction** 1

2.0 **Description of Equipment** 1

3.0 **Test Summary** 1

4.0 **System Test Configuration** 2
- 4.1 Support Equipment 2
- 4.2 Block Diagram of Test Setup 2
- 4.3 Justification 3
- 4.4 Software Exercise Program 3
- 4.5 Mode of Operation During Test 3
- 4.6 Modifications Required for Compliance 3

5.0 **Radiated Emissions** 4
- 5.1 Radiated Emission Limits 4
- 5.2 Site Description and List of Test Equipment 5
- 5.3 Test Procedure 5
- 5.4 Field Strength Calculation 5
- 5.5 Configuration Photographs 6
- 5.6 Test Data 7

6.0 **Miscellaneous Information or Other Comments** 9

1.0 Introduction

This report is designed to show compliance with the FCC Part 2.1091 Radio Frequency Radiation Exposure Evaluation for mobile and unlicensed devices. The test procedures and limits, as described in American National Standards Institute C95.1-1992, were employed. A description of the product and operating configuration, the various provisions of the rules, the methods for determining compliance, and a detailed summary of the results are included within this test report.

2.0 Description of Equipment

The Sierra Wireless, Inc. Model MP210V is a 4 watts CDPD modem with transmit frequency range of 824 – 849 MHz.

The amplifier is used with the following antennas:

1. Allgon Model PM-BF42, 3.0 dBd gain.
2. Larsen Model NMO-800, 3.0 dBd gain.
3. Antenna World Model MST-855, 3.0 dBd gain.
4. Antenna World Model CLR-877, 3.0 dBd gain.
5. Antenna World Model CLR-8247, 3.0 dBd gain.

3.0 Test Summary

The CDPD modem was tested by Intertek Testing Services as documented herein, and the energy emitted by the EUT was found to be below the recommended levels of Maximum Permissible Exposure for Uncontrolled Environments in FCC 1.1310 (ANSI C95.1: 1992).

Therefore, in reference to the limits set forth in FCC 1.1310 use of the equipment is deemed to be safe with respect to human exposure to Radio Frequency Electromagnetic Fields, when used in a normal fashion.

4.0 System Test Configuration

4.1 Support Equipment

Item #	Description	Model No.	Serial No.	FCC ID
1	IBM Computer	ThinkPad	N/A	JRUANB-5
2	GW DC Power Supply	GPR-6030	N/A	N/A
3	Trimble Antenna GPS	28367-00	21D70081	NA

4.2 Block Diagram of Test Setup

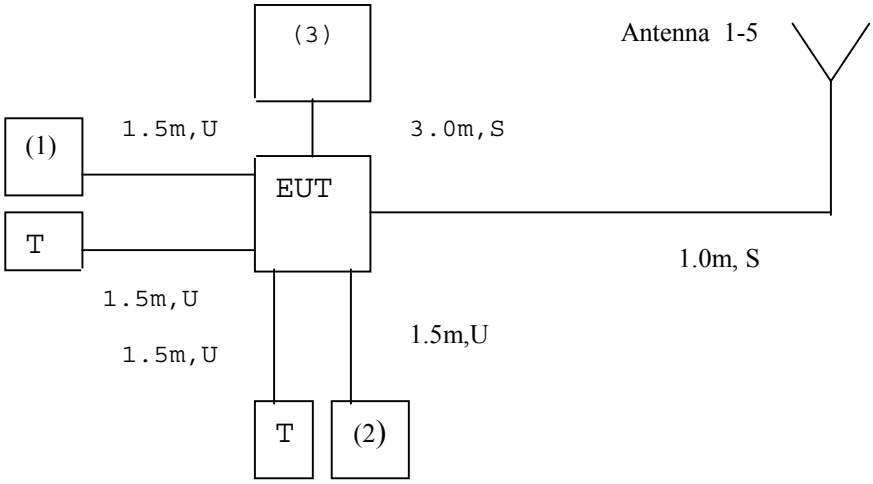

* = EUT ** = No ferrites on video cable	**S** = Shielded; **U** = Unshielded	**F** = With Ferrite **T** = Temination

4.3 Justification

The system was configured for testing in a typical fashion (as a customer would normally use it).

4.4 Software Exercise Program

No special software was used during the tests.

4.5 Mode of Operation During Test

Transmitting full power (4W).

4.6 Modifications Required for Compliance

The following modifications were installed during compliance testing in order to bring the product into compliance (Please note that this list does not include changes made specifically by Sierra Wireless prior to compliance testing):

No modifications were installed by Intertek Testing Services.

5.0 Radiated Emissions

5.1 Radiated Emission Limits, FCC 1.1310

The following exposure limits apply to equipment use in Uncontrolled Environments:

Maximum Permissible Exposure for Uncontrolled Environments

Frequency Range (MHZ)	Electric Field Strength (E) (V/m)	Magnetic Field Strength (H) (A/m)	Power Density (S) E-field, H-field (mW/cm^2)	Averaging Time (Minutes)
0.3 - 1.34	614	1.63	*100	30
1.34 - 30	824/f	2.19/f	$*180/f^2$	30
30 - 300	27.5	0.073	0.2	30
300 - 1500	-	-	f/1500	30
1500 - 100,000	-	-	1.0	30

* = Plane-wave equivalent power density.
Dashes "-" are used to indicate that there is no limit under the guideline.

5.2 Site Description and List of Test Equipment.

All tests were performed on Open Area Test Site.

Measurement equipment used for radiated emission compliance testing utilized some of the equipment on the following list:

Manufacturer	Equipment	Model Number	Calibration Due
IFI	Field Strength Meter	EFS-5	6/23/00

5.3 Test Procedure

The test was performed at 836 MHz. The antenna was placed on a 0.8m wooden table on open site. The antenna was connected to the EUT. EUT output power was measured at RF output connector. EUT has 36.0 dBm power output.

The sensor of the field strength meter was moved around the antenna to obtain the maximum reading of the field strength meter. The measurements were performed at the distance 0.2m and 0.3m from the antenna.

5.4 Field Strength Calculation

The field strength was measured directly from the meter. The power density (PD in $W.m^2$) was calculated using the following formula:

$$Pd = E^2/120\pi$$

Where E is Field Strength in V/m

5.5 Configuration Photographs

Radiated Emission

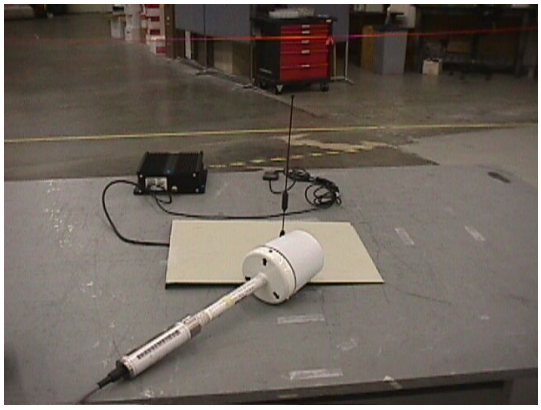

Antenna #1

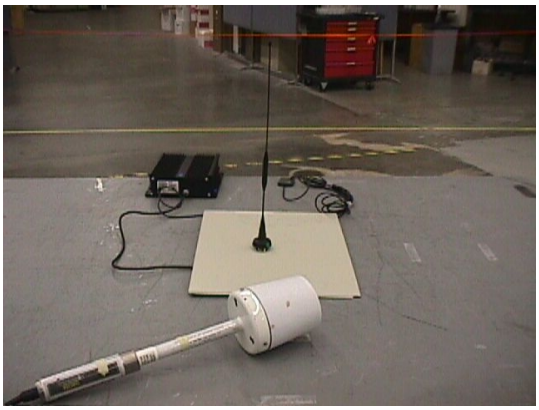

Antenna #2

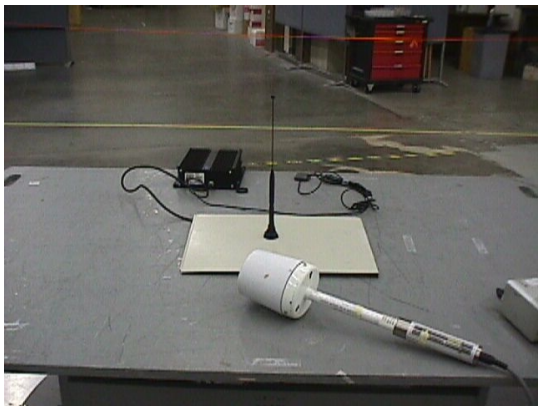

Antenna #3

Antenna #4

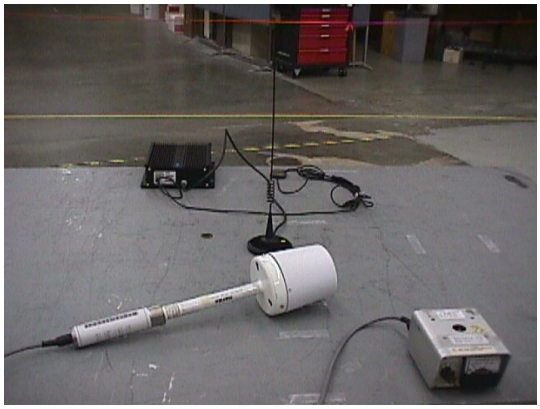

Antenna #5

5.6 Test Data

The results on the following page(s) were obtained when the device was tested in the condition described in section 4.

Antenna #1			
Test Distance m	**Maximum Field Strength Reading V/m**	**Calculated Power Density mW/cm^2**	**FCC Limit mW/cm^2**
0.1	25	0.17	0.54
0.2	23	0.14	0.54
0.3	21	0.12	0.54
0.5	15	0.06	0.54

Antenna #2			
Test Distance m	**Maximum Field Strength Reading V/m**	**Calculated Power Density mW/cm^2**	**FCC Limit mW/cm^2**
0.1	24	0.15	0.54
0.2	22	0.13	0.54
0.3	20	0.11	0.54
0.5	15	0.06	0.54

Antenna #3			
Test Distance m	**Maximum Field Strength Reading V/m**	**Calculated Power Density mW/cm^2**	**FCC Limit mW/cm^2**
0.1	23	0.14	0.54
0.2	21	0.12	0.54
0.3	18	0.09	0.54
0.5	14	0.05	0.54

Antenna #4			
Test Distance m	**Maximum Field Strength Reading V/m**	**Calculated Power Density mW/cm^2**	**FCC Limit mW/cm^2**
0.1	23	0.14	0.54
0.2	22	0.13	0.54
0.3	18	0.09	0.54
0.5	14	0.05	0.54

Antenna #5			
Test Distance m	**Maximum Field Strength Reading V/m**	**Calculated Power Density mW/cm^2**	**FCC Limit mW/cm^2**
0.1	23.5	0.15	0.54
0.2	22	0.13	0.54
0.3	19	0.10	0.54
0.5	15	0.06	0.54

Judgment: The EUT will pass FCC limit at a distance 0.2m or longer from EUT

6.0 Miscellaneous Information or Other Comments

None.