Aclara RF Electric I-210+c

User Guide

Y21030-TUM
Revision A
www.Aclara.com

Proprietary Notice
This document contains information that is private to Aclara Technologies LLC, an Ohio limited liability company, and/or that is private to Aclara Meters LLC, a Delaware limited liability company (individually or collectively "Aclara"). This information may not be published, reproduced, or otherwise disseminated without the express written authorization of Aclara.

Any software or firmware described in this document is furnished under a license and may be used or copied only in accordance with the terms of such license.

Disclaimer
The information in this document is subject to change without notice and should not be construed as a commitment by Aclara. Aclara assumes no responsibility for any errors that may appear in this document.

No responsibility is assumed for the use or reliability of software on equipment that is not supplied by Aclara.

Metrum Cellular, STAR, Synergize, and TWACS are registered trademarks of Aclara Technologies LLC.

Aclara Technologies LLC
Confidential and Proprietary
Copyright 2021-2022. All Rights Reserved.

Table of Contents

Chapter 1: Introduction 1

Purpose . . . 1
Audience . . . 1
Scope . . . 1
Applicable Industry Standards . . . 1
Tools Required . . . 2
Optional Tools . . . 2
System Overview . . . 2
Meter Components . . . 3
Support . . . 3
Aclara Connect . . . 3
Aclara University . . . 3
Technical Support . . . 3

Chapter 2: Safety Guidelines 5

Shock Hazard Warning . . . 5
RF Exposure Hazard . . . 5
ESD Caution . . . 5
Replacement Parts . . . 6
Inspect Antenna Clearance . . . 6

Chapter 3: Regulatory Guidelines 7

FCC/IC Compliance . . . 7
FCC/IC RF Exposure Guide . . . 8
Field Calibration Procedure . . . 8
Conformité FCC/IC . . . 8
Guide d'exposition aux RF FCC/IC . . . 9
Procédure de calibration sur place . . . 9
Licensing . . . 9
Installation on Buildings . . . 9
Pole Mount Installations . . . 10

Chapter 4: Product Specifications 11

Compliance Declarations . . . 13
FCC Part 15 Compliance . . . 13
FCC Part 90 Certification . . . 13
RSS-GEN Compliance . . . 13
ISED Certification . . . 14
RF Exposure . . . 14
Listing . . . 14
Meter Accommodations . . . 14
Supported Meter Forms . . . 14

Chapter 5: Features 17

Supported Messages . . . 17
Daily Shifted and Interval Messages . . . 18
Demand Reset . . . 19
End Device Events . . . 20
New Meter . . . 21
On Request Reading . . . 22
Power Outage and Restoration . . . 23
Remote Connect / Disconnect . . . 24
Trace Route . . . 26
Other Messages . . . 27
Traffic Classification . . . 27
Phase Detection . . . 27
Supported Modes of Operation . . . 34
NIC Modes . . . 34
Meter Softswitches . . . 34
Supported Measurements . . . 36
LP Data . . . 36
Daily Shifted (DS), On-Request (OR), and Demand Reset (DR) Quantities . . . 42
Reading Notes . . . 59
Supported Quality Codes . . . 60
Supported Alarms . . . 62
Tamper Detection . . . 66
Alarm Notes . . . 67
Meter Features Not Supported . . . 68
Configuration Management . . . 69
Recommended Meter Configurations . . . 71
Restrictions . . . 71
Meter Modes . . . 72
Diagnostics . . . 72
Display . . . 73
Recommended Endpoint NIC Configurations . . . 73
Opt-Out . . . 74
Meter Passwords . . . 74
Meter Firmware . . . 75
Softswitch Management . . . 75

Chapter 6: Inside the Meter 77

Equipment Layouts . . . 77
LEDs . . . 78

Chapter 7: Inspecting the Site for Anomalies 81

Observe All Safety Precautions . . . 81
Antenna Clearance . . . 81

Chapter 8: Installing the Meter 83

Meter Installation Procedure . . . 83

Chapter 9: Testing NIC Communications in the Field **85**

Network Status 85
Self-Test Status 85
Operating Mode 87
Trace Route 87
Testing Communication with a Meter in the Field 87
Site Testing. 88
Testing Communication with a Meter in the Meter Shop 88
Interferer Test 89

Chapter 10: Updates and Repairs **91**

Replacing a NIC 91

CHAPTER

1

INTRODUCTION

Purpose

This document intends to lay groundwork for the installation, use, and maintenance of the eRF I-210+c NIC.

Audience

This document is intended for Aclara customers that have signed a Non-Disclosure Agreement.

Scope

This document identifies the capabilities of the I-210+c meter when outfitted with an Aclara eRF I-210+c Network Interface Card (NIC). The document will discuss installation, use, and maintenance of the product.

Applicable Industry Standards

The product is required to comply with the following industry specifications as listed in *Applicable Industry Specifications & Standards* on page 1.

Table 1.1 Applicable Industry Specifications & Standards

Reference	Document Title	Document Number
CEC	Canadian Electrical Code	CSA C22.1
FCC OET Bulletin 65	Evaluating Compliance with FCC Guidelines for Human Exposure to Radio Frequency Electromagnetic Fields	OET Bulletin 65, Edition 97-01, August 1997
NEC	National Electrical Code	NFPA 70
Safety Code 6	Limits of Human Exposure to Radio Frequency Electromagnetic Energy in the Frequency Range from 3 kHz to 300 GHz. (Consumer and Clinical Radiation Protection Bureau, Environmental and Radiation Health Sciences Directorate, Healthy Environments and Consumer Safety Branch, Health Canada.)	Safety Code 6 (2015)

Tools Required

- Volt Ohm Milliampmeter (VOM)

Optional Tools

- Spectrum Analyzer

System Overview

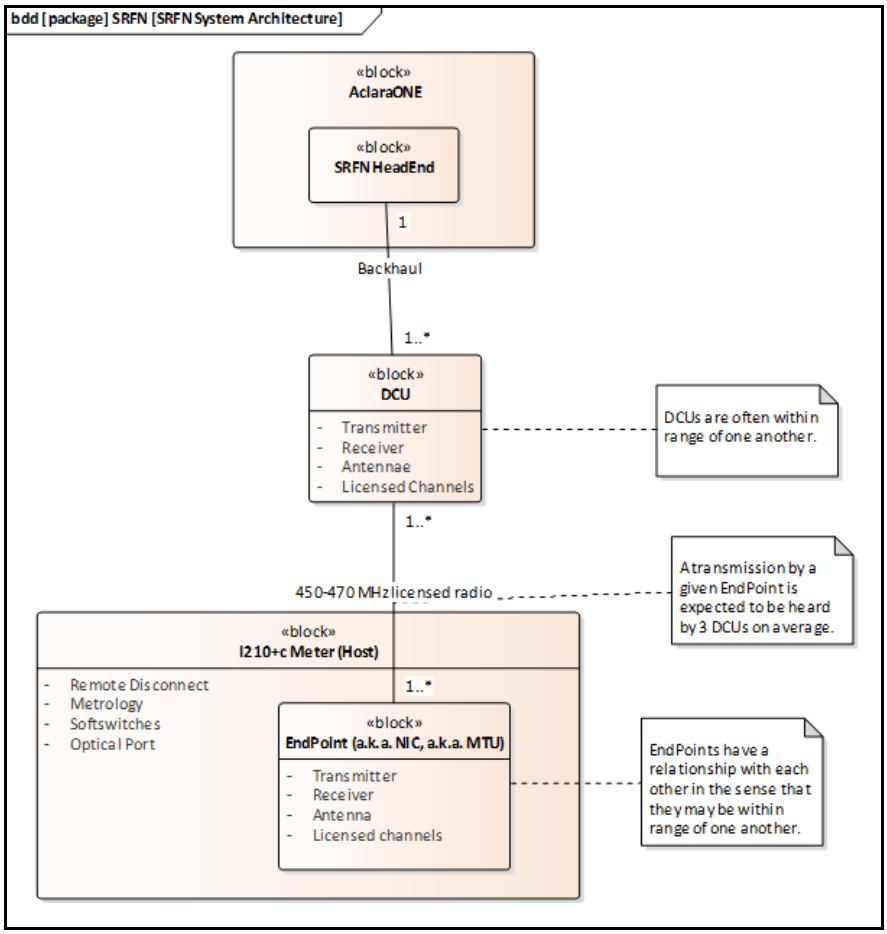

Figure 1.1 Aclara RF Network (SysML Block Definition Diagram)

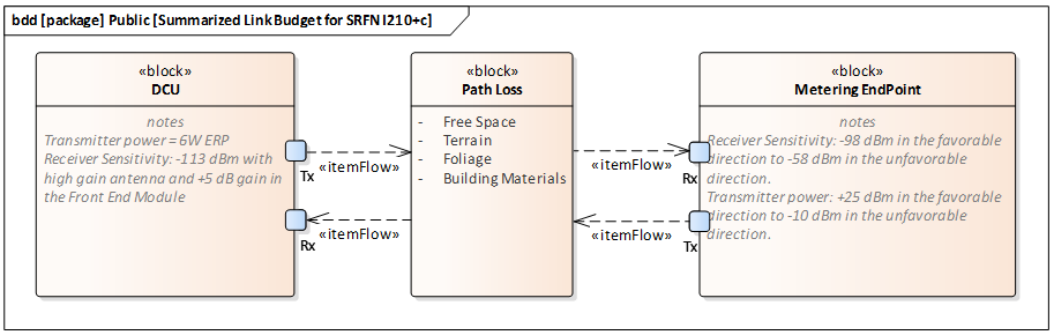

Figure 1.2 Link Budget for the Aclara RF Network I-210+c

Meter Components

- The I-210+c or I-210+c RD meter with Gen 5 hardware and firmware 6.0 (or later)
- An Aclara RF Network Interface Card (NIC), otherwise known as the eRF I-210+c NIC
- A flexible antenna which connects to the NIC and wraps around the meter "under the glass"

Support

Aclara Connect

Aclara's customer portal (https://connect.aclara.com) enables you to access our frequently-updated knowledge database, easily access product documentation, submit and track your Support cases and RMAs, access Aclara University's Online Learning Center (OLC) and learning library, track your orders, join communities and groups, join in discussions with other Aclara customers and Aclara personnel, and much more. If you do not have access to Aclara Connect, email AclaraSupport@Hubbell.com and request access.

Aclara University

Aclara's on-demand training makes content available to you in a convenient, cost-effective online environment. The OLC has recordings of several webinars, streaming educational videos, software simulations, and short videos which walk you through a specific task. Access the OLC by going to Aclara Connect and clicking the Aclara University link.

Technical Support

Email AclaraSupport@Hubbell.com or call 1-800-892-9008 to speak with an Aclara representative.

CHAPTER

2

SAFETY GUIDELINES

Shock Hazard Warning

DANGER Shock hazard

Electricity can cause burns and interfere with the operation of the heart.

Working with electricity can be hazardous. Wear appropriate PPE and observe all applicable safety procedures. The PPE should include insulating gloves, safety glasses, and any other equipment required by the utility or the circumstances of the installation.

RF Exposure Hazard

NOTICE RF exposure hazard

The equipment will begin communicating once it powers up. This will expose people nearby to RF energy, however an analysis of the power levels finds that the levels are safe per FCC and Health Canada recommendations.

Users are advised to maintain a distance of 20 cm or more from the meter, or a bank of meters, in order to minimize exposure levels.

ESD Caution

NOTICE Electrostatic discharge may damage equipment.

Repairs to the meter should only occur in the meter shop. Wear suitable ESD protective gear, such as grounding straps, when servicing equipment, or return the equipment to the factory for repair.

Replacement Parts

NOTICE Incorrect repair parts may result in equipment damage or create an unsafe condition.

Return the equipment to the factory for repair.

Inspect Antenna Clearance

NOTICE Risk of performance issues

RF energy can be shielded by nearby materials. Proximity to metal walls or fences can inhibit the transmission of RF energy and affect system performance. If the meter is surrounded by metal or in a basement, make note. Further attention may be required at this location.

NOTES Section 4 indicates the directivity of the antenna. The directivity of an installed meter's antenna may be somewhat different than the published value depending on nearby metals.

A portable spectrum analyzer may be used to determine the power received at a given location at that moment in time.

CHAPTER

3

REGULATORY GUIDELINES

It is important that the installer follow all applicable national, regional, and local codes. Failure to do so could result in an unsafe condition or injury. It may also create a situation in which interference is created by the operation of the equipment.

This manual will provide examples which are meant to be examples only. Local and regional codes may require a different practice.

FCC/IC Compliance

NOTE This equipment has been tested and found to comply with the limits for a Class B digital device, pursuant to part 15 of the FCC Rules. These limits are designed to provide reasonable protection against harmful interference in a residential installation. This equipment generates, uses and can radiate radio frequency energy and, if not installed and used in accordance with the instructions, may cause harmful interference to radio communications. However, there is no guarantee that interference will not occur in a particular installation. If this equipment does cause harmful interference to radio or television reception, which can be determined by turning the equipment off and on, the user is encouraged to try to correct the interference by one or more of the following measures:

- Reorient or relocate the receiving antenna.
- Increase the separation between the equipment and receiver.
- Connect the equipment into an outlet on a circuit different from that to which the receiver is connected.
- Consult the dealer or an experienced radio/TV technician for help.

If receiving antenna needs to reoriented or relocated, it must be done by an installer.

CAUTION Any changes or modification made to this device without the expressed, written approval of Aclara Technologies LLC may void the user's authority to operate this device.

FCC/IC RF Exposure Guide

Aclara Technologies LLC low power RF devices and their antennas must be fixed-mounted on indoor or outdoor permanent structure(s) providing a separation distance of at least 1 meter from all persons during normal operation. This device is not designed to operate in conjunction with any other antennas or transmitters. No other operating instructions for satisfying RF exposure compliance are needed.

Holding the antenna in one’s hands while it is transmitting, or standing near a transmitting antenna for a prolonged period of time, could result in RF exposure that exceeds FCC and Health Canada recommendations.

This device has been tested for exposure of humans to RF energy. It satisfies OSHA, FCC, and Health Canada requirements provided it is installed in a manner described in this manual and operated in accordance with the user guide.

Field Calibration Procedure

Aclara Technologies LLC low power RF devices have passed through extensive testing and calibration procedures while in the factory. Therefore, no additional calibration or adjustment is required in the field.

Conformité FCC/IC

Cet équipement a été testé et il est conforme aux limites pour un appareil numérique de Classe B, en vertu de l'article 15 des règlements de la FCC. Ces limites sont conçues pour offrir une protection raisonnable contre l'interférence nuisible dans une installation résidentielle. Cet équipement génère, utilise et peut émettre de l'énergie de fréquences radio et, s'il n'est pas installé ou utilisé conformément aux instructions, il peut causer une interférence nuisible aux communications radio. Il n'existe toutefois aucune garantie que de telles interférences ne se produiront pas dans une installation particulière. Si cet appareil cause des interférences nuisibles à la réception des signaux de radio ou de télévision, ce qui peut être détecté en mettant l'appareil sous et hors tension, l'utilisateur peut tenter de neutraliser l'interférence de l'une ou l'autre des façons suivantes :

- Réorienter ou repositionner l'antenne de réception.
- Augmenter la distance séparant l'équipement du récepteur.
- Brancher l'appareil dans une prise sur un circuit électrique différent de celui sur lequel le récepteur est branché.

MISE EN GARDE Tout changement ou toute modification à cet appareil sans l'approbation écrite expresse d'Aclara Technologies LLC peut annuler l'autorisation de l'utilisateur d'utiliser cet appareil.

Ce produit est conforme à la norme FCC et aux limites d'exposition au rayonnement RSS-102 d'Industrie Canada définies pour un environnement non contrôlé.

Cet appareil est conforme à des règlements Innovation, Sciences et Développement économique Canada exempts de licence standard RSS (s). Son fonctionnement est soumis aux deux conditions suivantes: (1) Ce dispositif ne doit pas causer d'interférences nuisibles, et (2) cet appareil doit accepter toute interférence reçue, y compris les interférences pouvant entraîner un fonctionnement indésirable.

Guide d'exposition aux RF FCC/IC

Les appareils RF à faible puissance Aclara Technologies LLC ainsi que leurs antennes doivent être montés de manière fixe sur des structures intérieures ou extérieures permanentes qui se trouvent à au moins 1 metrè des personnes pendant le fonctionnement normal. Cet appareil n'est pas conçu (et il n'a aucun branchement externe) pour être utilisé en association avec toute autre antenne ou tout transmetteur. Aucune autre instruction d'utilisation n'est requise pour assurer la conformité aux règles d'exposition aux RF.

Procédure de calibration sur place

Les appareils RF à faible puissance Aclara Technologies LLC ont été soumis à des tests étendus et multi-tâches et à des procédures de calibration complexes en usine. Par conséquent, ils ne requièrent pas de calibration ni d'ajustement supplémentaire sur place.

Licensing

The equipment you are installing has received a grant from the FCC (US) and from the ISEC (Canada) to operate. Its FCC ID and IC ID numbers are printed on the equipment label. It is expected that this equipment will be licensed to operate in the country in which it is installed as mobile equipment (even though it is stationary). US CFR 47.90 and other regulations restrict the elevation of the antenna and restrict the power transmitted. It is expected that the utility has worked with Aclara to obtain the necessary license for the frequencies for which the equipment will be programmed to operate.

Installation on Buildings

If the meter is being mounted in or on a building, then fire protection codes will likely apply. In the US, NFPA 70 (the NEC) will likely be required. In Canada, C22.1 (the CEC) will likely be required.

Pole Mount Installations

When mounting a meter on a power pole, it is important that the safety requirements of the NESC be satisfied. Different regions and utilities may impose additional safety requirements in addition to this North American standard. Local codes and pole owner best practices will be in addition to the NESC and NEC rules. All applicable requirements must be understood and followed by the installer.

CHAPTER

4

PRODUCT SPECIFICATIONS

Table 4.1 Product Specifications

Specification	Description
Meter Hardware Version	I-210+c and I-210+c RD Gen 5 platform
Meter Firmware Version	6.0.4.1
eRF I-210+c NIC (EndPoint) Hardware Version	Y84092-1
Aclara RF NIC (EndPoint) Firmware Version	1.74
AclaraONE Release	1.10
MeterMate	6.10.0.166
EndPoint quiescent power consumption	1.5W
450 MHz Band antenna port output power	+30.3 dBm (conducted)
450-470 MHz band receiver sensitivity	-98 dBm maximum receiver sensitivity at 10^{-5} BER @ 4800 BAUD with 4GFSK modulation having 1kHz tone separation; directed in the most favorable heading
Frequency Band	450-470 MHz
Note: The radio is configurable to operate in numerous specific 12.5 kHz channels within the 450-470 MHz band.	
Transmission Rate	4800 BAUD (which, when operated with 4GFSK modulation, provides 9600 bps).
Antenna Impedance	50 Ohms
Antenna Gain	The antenna gain averages -6 dBi (or higher) across the front half of the meter, averages -13.1 dBi (or higher) across the back half of the meter, with a minimum gain of -16 dBi (or better) along any azimuth.
Note: Mounting the meter in an environment near metal will affect the antenna pattern.	
Altitude	Operation to 5000 ft. elevation above sea level
NIC Operating Temperature Range	-40° to +85°C (inside the meter), 0 to 95% relative humidity (non-condensing)
Note: Refer to the Meter User Guide, Chapter 2, Operating Range and Ratings for the I-210+c meter ratings.	
Last Gasp repetition	Up to 6 messages over the course of 20 minutes when starting with fully charged super capacitors (supercaps)
Real Time Clock power ride-through capability	24 hours
Daily Shift Message Capacity	32 measurements
On-request Read message Capacity	4 measurements
Demand Reset Message Capacity	32 measurements

Table 4.1 Product Specifications

Specification	Description
LP Channel Capacity	4 channels
Notes: The storage duration varies as a function of the way LP data collection is defined. Refer to the Meter User Guide, Chapter 5, Section R_2 for more information on LP storage duration. The choice of Interval data transmission rates will have a profound impact on system bandwidth utilization when large quantities of meters are deployed. The baseline system will be designed to handle 4 channels of 15-minute interval data transmitted every 15 minutes. Configurations which increase the number of channels, decrease the interval size and transmission rate, or both, can increase the bandwidth requirements for the system beyond its baseline capability. Such configurations must be limited to be a small percentage of the overall population, or the infrastructure hardware capacity must be increased above baseline levels, in order to deliver large amounts of fine resolution LP data.	

Figure 4.1 shows that a field of invisible RF energy is pushed outward from the RF transmitter located inside the meter canopy. Due to antenna directivity, more energy will propagate out the face of the meter than the back of the meter. The energy is directed primarily in the horizontal plane at the same elevation as the meter, but some energy is directed a few degrees above and below the horizontal.

Figure 4.1 RF propagation concept

Ideally there is line of sight between the meter and the DCU. However, there are quite often building materials, foliage, vehicles, terrain, and/or the curvature of the Earth in the way. The RF will transmit through many building materials, be absorbed by some, and bounce off others. If a sufficiently strong, vertically polarized signal reaches the receiver, the message will be received. This is true of RF transmissions from the meter to the DCU, and from the DCU to the meter.

Compliance Declarations

FCC Part 15 Compliance

This device complies with Part 15 of the FCC Rules.

Operation is subject to the following two conditions:

1. This device may not cause harmful interference, and
2. This device must accept any interference received, including interference that may cause undesired operation.

FCC Part 90 Certification

This device has been certified as a Part 90 compliant device. The AMI label on the face of the meter will list the various certified components located within the enclosure by their FCC ID.

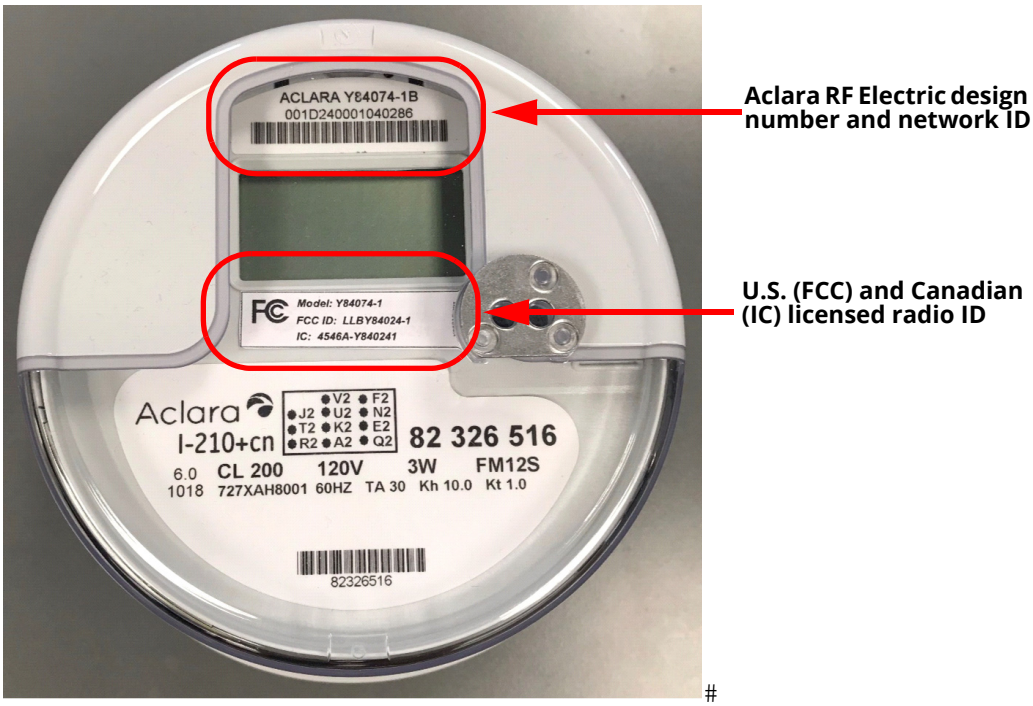

#

Figure 4.2 AMI label locations

RSS-GEN Compliance

This device contains license-exempt transmitter(s)/receiver(s) that comply with Innovation, Science and Economic Development Canada's license-exempt RSS(s). Operation is subject to the following two conditions:

1. This device may not cause interference.

2. This device must accept any interference, including interference that may cause undesired operation of the device.

ISED Certification

This device has been ISED certified. The meter AMI label (ref. Figure 4.2) will list the various certified components located within the enclosure by their IC ID.

RF Exposure

This device has been tested for exposure of humans to RF energy. It satisfies OSHA, FCC, and Health Canada requirements provided it is installed in a manner described in this manual and operated in accordance with the user guide.

Listing

This device may be UL listed. The meter nameplate will display the UL logo if this is the case.

Meter Accommodations

The Aclara RF Network I-210+c may be configured for demand-only, demand/load profile, Time of Use (TOU), TOU/demand metering, or TOU/demand meter with load profile metering.

Number of TOU tiers supported: 4

Timekeeping Battery: Optional; the NIC will determine if a functional battery is present and accommodate accordingly.

The NIC will discover the meter's LP configuration and report all enabled channels.

The NIC will discover how the meter measures demand and normalize the reported value to be in kW or kVAr (as appropriate).

Supported Meter Forms

Table 4.2 Supported meter forms

ANSI Meter Form
1S, CL100, 120V (both with and without a Remote Disconnect switch)
2S, CL200, 240V (both with and without a Remote Disconnect switch)
2S, CL320, 120/240V
3S, CL20, 240V
3CS, CL20, 240V
4S, CL20, 240V
12S, CL200, 120V (both with and without a Remote Disconnect switch)

Table 4.2 Supported meter forms

ANSI Meter Form
12S, CL320, 120V
25S, CL200, 240V

CHAPTER

5

FEATURES

Supported Messages

The Aclara RF Electric Network I-210+c customer configuration worksheet describes several types of messages:

- Daily Shifted (DS)
- Demand Reset (DR)
- Interval Data
- On-Request Read (OR)

The Aclara RF Electric Network I-210+c customer configuration worksheet has been used at the factory in conjunction with the I-210+c meter configuration worksheet to configure the boards in the meter. This section will describe how the messages flow through the system, while *Configuration Management* on page 69 will talk about how configurations may be changed and managed.

Daily Shifted and Interval Messages

The following image shows a typical day in the life of a meter. (However, other messages are possible. These are shown in separate drawings.)

Figure 5.1 Daily Shift and Interval Data Messages

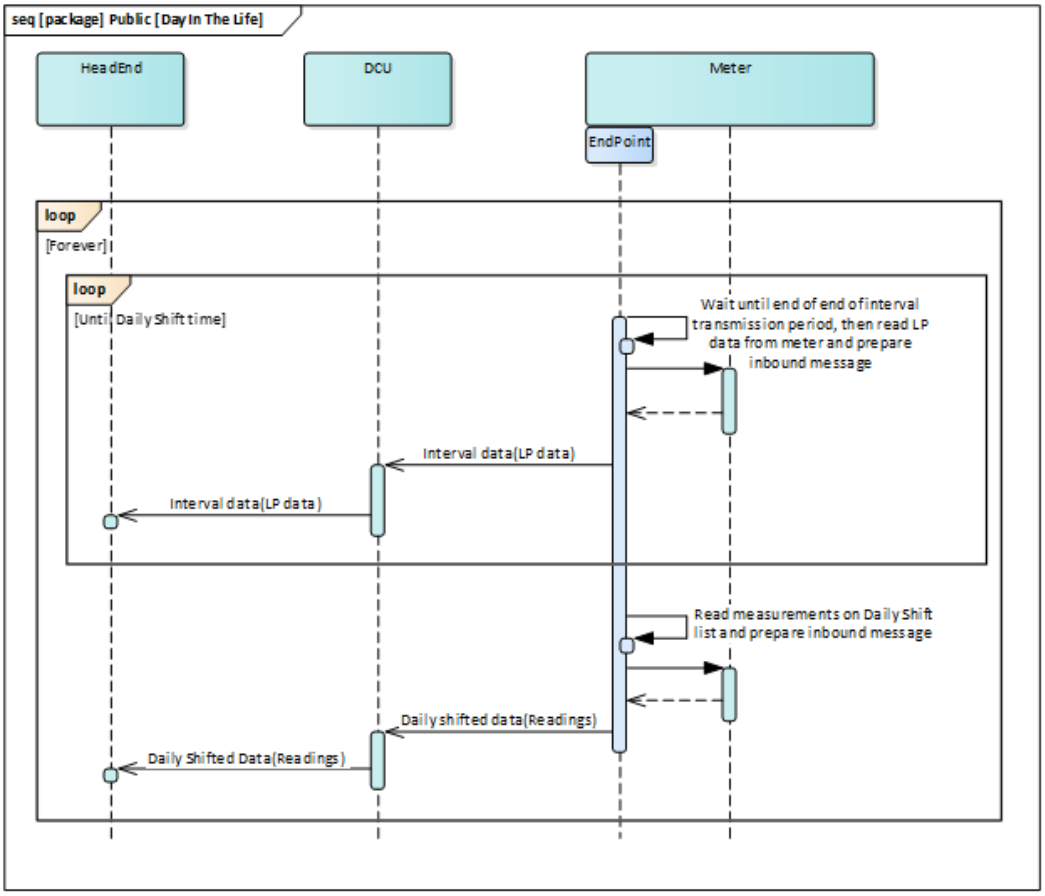

Typically, every day at midnight (the default daily shift time) the day begins with a series of “daily shifted” readings. These readings are described on the customer configuration worksheet with the “DS” designation.

All throughout the day the meter is collecting LP data. In the Aclara RF Network I-210+c, the LP data collected is specified by the meter program. The Aclara RF Network NIC will discover how the meter is programmed and send every programmed channel up to the headend in periodic intervals. By default, 15-minute interval data is collected and transmitted every 15 minutes. However, it is possible to batch the data into larger groups and send the interval data less frequently. Intervals of energy readings are typically reported as incremental (delta) values, while channels of temperature and voltage are reported as absolute values. Generally speaking, it is a good idea to ensure that every channel of delta data sent in as interval data has a corresponding absolute value which is transmitted in the Daily Shifted data message.

Measurements are transmitted with full meter resolution.

Demand Reset

Demand may be reset several different ways. The more common approach is to form a group of meters to be reset at the headend using the job scheduler, then issue the commands over the air to individual meters. The retry process can be rather complex and is not depicted in the following image.

Figure 5.2 Demand Reset Message

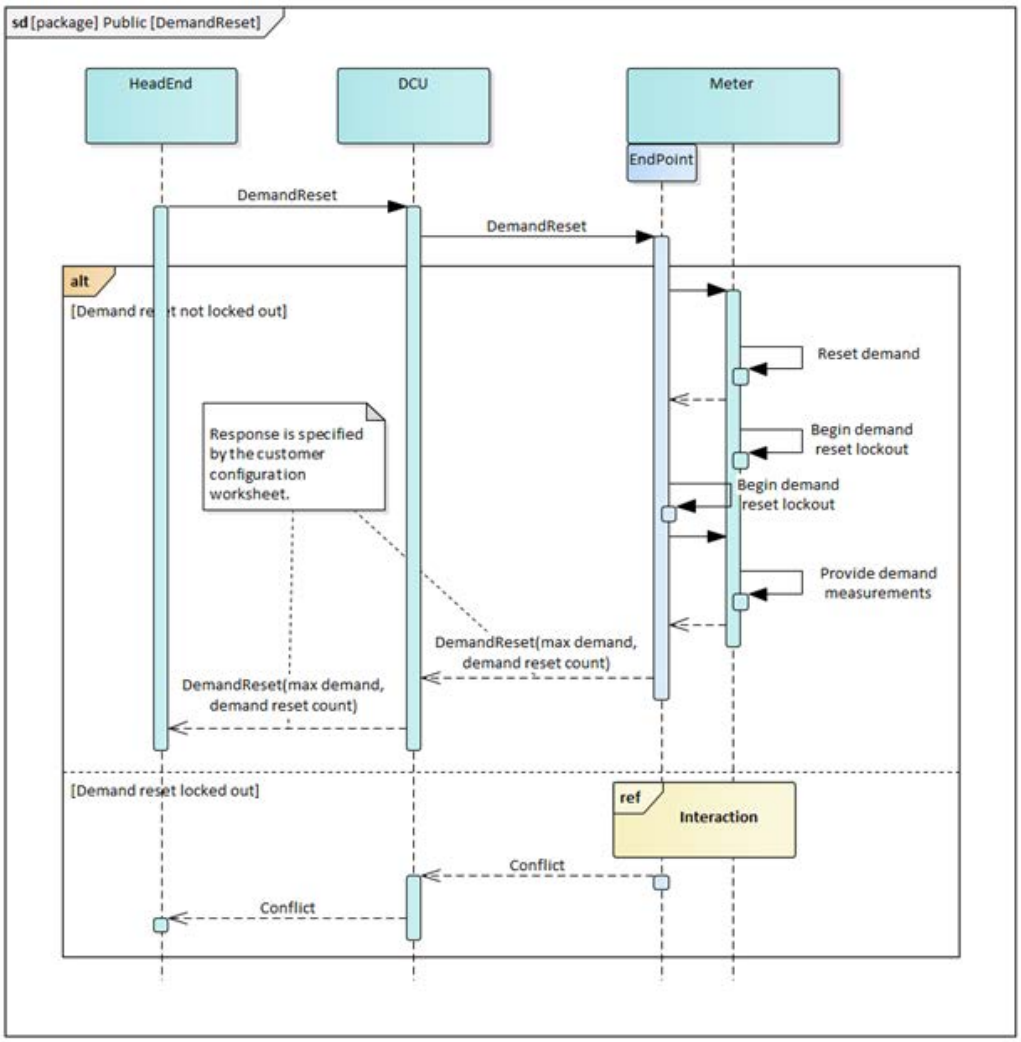

It might be noted that there are two demand reset lockout periods. One is enforced by the NIC (and prevents remote demand resets from occurring.) Another lockout is enforced by the metering platform. It prevents lockouts from occurring locally. Aclara recommends that present and previous demand values be reported via the daily shift mechanism to maximize the availability of this critical billing data. To prevent accidental double resets, we recommend that the demandResetLockoutPeriod parameter in the module be set to 24 hours.

The Aclara RF Electric I-210+c customer configuration worksheet will describe which Reading Types are to be returned to the headend in the DR message response.

End Device Events

The Aclara RF Network system supports the notion of real time and opportunistic alarms.

Figure 5.3 EndDeviceEvent Messaging (SysML Sequence Diagram)

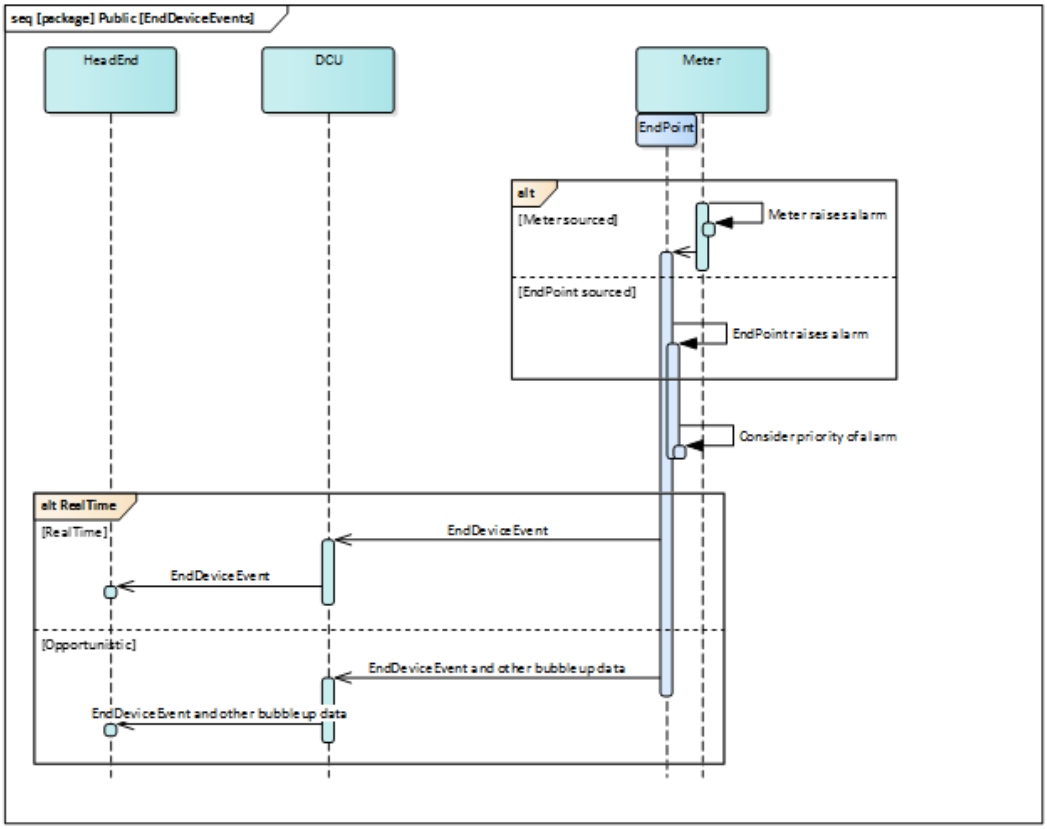

New Meter

When a new meter is installed, the meter and its NIC power up and begin to communicate with nearby DCUs. Once the NIC learns that it can communicate on the network, it sends a message to the headend and a durable DTLS security session is created. Once the session is established the NIC will begin sending up registration data as well as other messages that are due.

Figure 5.4 Meter Installation and Registration (SysML Sequence Diagram)

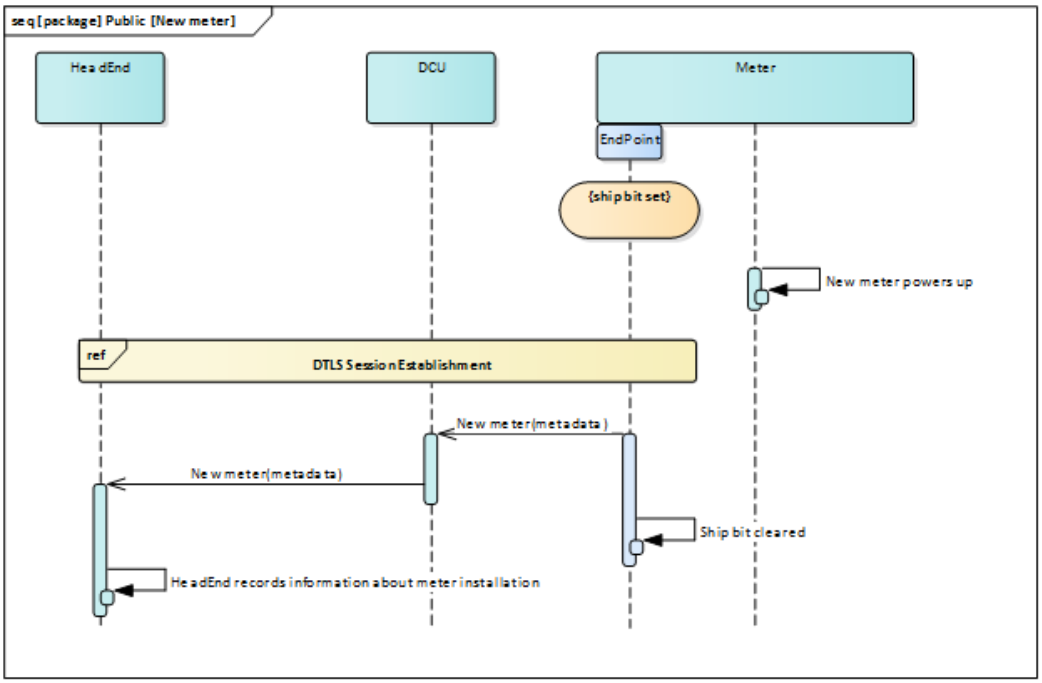

On Request Reading

The customer configuration worksheet defines what the NIC will generate in response to an on-request read. (This is done by placing “OR” in the cells which indicate the desired readings.) The following image describes how a message is issued by the user at the headend to a DCU near the NIC.

Figure 5.5 On Request Read Sequence

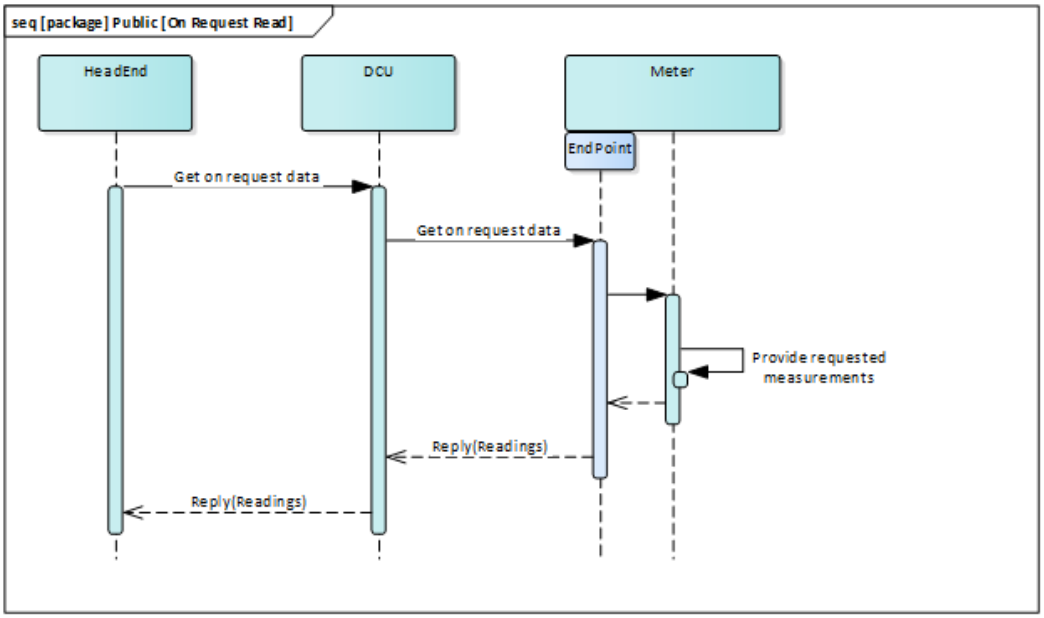

The DCU converts the message to RF and transmits it to the NIC. The NIC processes the request by fetching fresh readings from the meter. It transmits the response to the DCU. The DCU buffers and sends the message over the backhaul to the headend.

Power Outage and Restoration

When a power outage begins, a timer starts counting in the NIC. The NIC will wait until the Outage Declaration Period has lapsed to ensure that the outage is a not a momentary interruption. If the interruption is sustained, a “last gasp” message will be sent to the headend. As the outage continues, additional messages will be sent. As many as 6 messages may be sent within the first 20 minutes of the outage. Refer to the following image.

Figure 5.6 Last Gasp and Power Restoration Messages

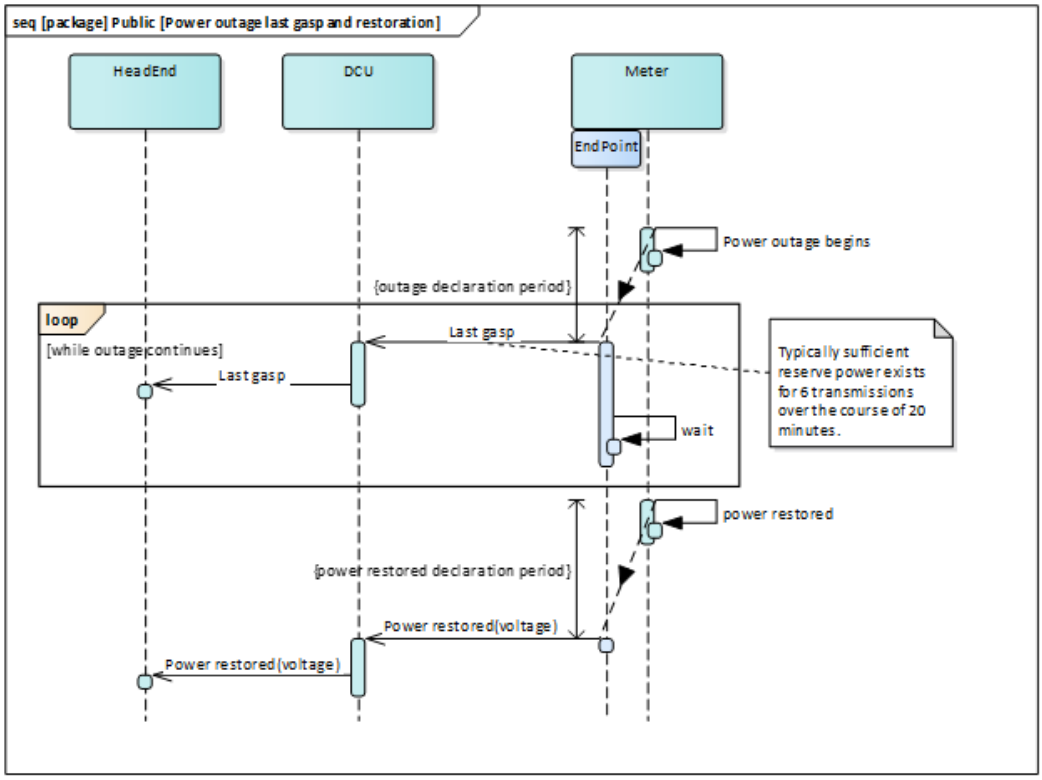

When power is restored, a “power restored” message is sent to the headend.

Remote Connect / Disconnect

The Aclara RF Network I-210+c supports remote connection and disconnection of the service.

Figure 5.7 Remote Connect/Disconnect Command (SysML Sequence Diagram)

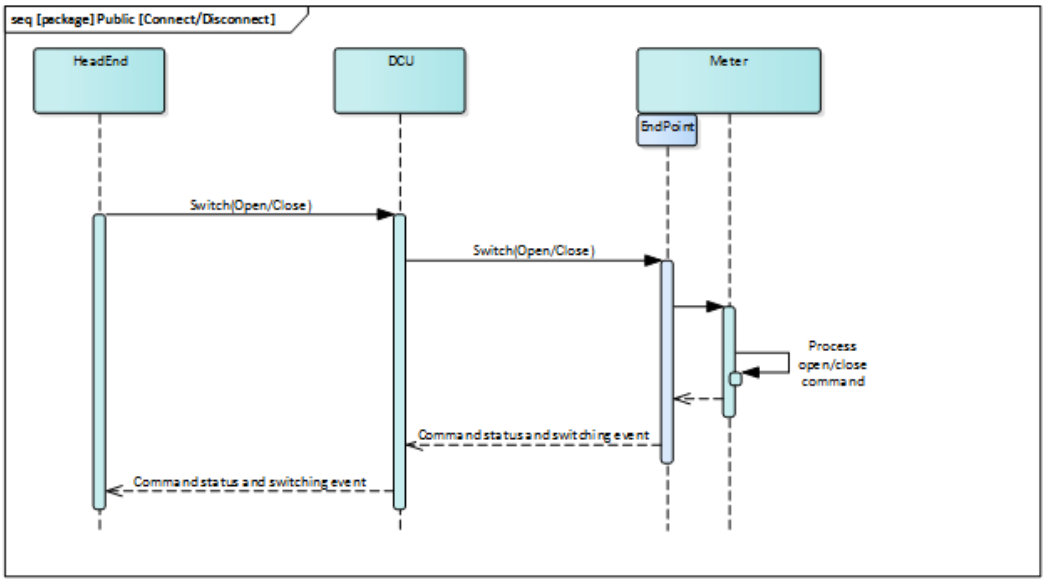

If the switch opens because of a local command over the optical port, or because some threshold tripped, an EndDeviceEvent message will be generated and carry the alarm to the headend.

The following RD commands are supported over the air and over the optical port:

- Open (resulting in a meter mode of “Opened and held open”)
- Close (resulting in a meter mode of “Closed with service connected”).

The following RD commands are supported over the optical port but not over the air:

- Lock open
- Lock closed
- Arm for manual closure

If the consumer presses the (optional) close button on the face of the meter while it is armed, the switch will close and the NIC reports the “RCD Closed” EndDeviceEvent to the headend.

The following preprogrammed conditions may cause the RD switch to move:

- Open due to outage management
- Open due to load control service disconnect

Over the air commands are not available in the initial firmware release to operate the switch for direct load control.

If a command is given to close the meter, but the meter detects load-side voltage, it will refuse to close in and the response message will indicate the reason why. At some point later, if the load-side voltage is taken away, the meter will automatically respond to the previous command and close the switch. The NIC will report the change in switch position.

Refer to the I-210+c Meter User Guide for more information on the various Remote Disconnect modes of operation.

Aclara recommends that a measurement of the switch position be brought back as a daily read. A backoffice software application can then be used to confirm that the switch position agrees with the account status. If a customer calls with questions about the quality of his or her service, the customer service representative (CSR) may issue a command to the meter to retrieve a measurement of the voltage(s) being provided, e.g., “indicating electricitySecondaryMetered voltage phaseA (V)”. However, if a meter has the RCD switch opened, this measurement will only indicate the (line side) voltage supplied to the meter. There is a way to sense if there is voltage on the load side. The “electricitySecondaryMetered energizationLoadSide (status)” measurement will indicate TRUE (1) if voltage is present and FALSE (0) if it is not. Sometimes when the RCD is opened, customers connect their own generator to power appliances in their house. If they fail to also open the main circuit breaker at their house, the generator voltage will backfeed up to the meter. The load side voltage status measurement will sense this voltage. If a command is then given to close the RCD, the meter will reject the command and return an event saying that the command failed. It will also supply the loadside voltage status measurement as a clue to indicate the cause.

There is also the case that when the RCD switch is opened, some customers bypass their meter and steal energy. The load side voltage status measurement will indicate that voltage is present, much like the case of customer supplied generation, but no distinction is made as to whether this measurement is synchronous or asynchronous. The meter will likewise reject a command to close it when lineside voltage is present. In addition to the RCD switch position, the user may also want to retrieve the load side voltage status in a daily or on-request reading.

Trace Route

Users at the headend may ping a meter by using the Traceroute command. As the command travels through the system, it will accumulate a history of timestamps when it arrived and departed each piece of equipment. It will also, for the radio portions, collect Received Signal Strength Indications (RSSI) in dBm. When the signal strength approaches the lower limits described in the specifications, communication will become unreliable.

Figure 5.8 Trace Route (Ping) Messaging (SysML Sequence Diagram)

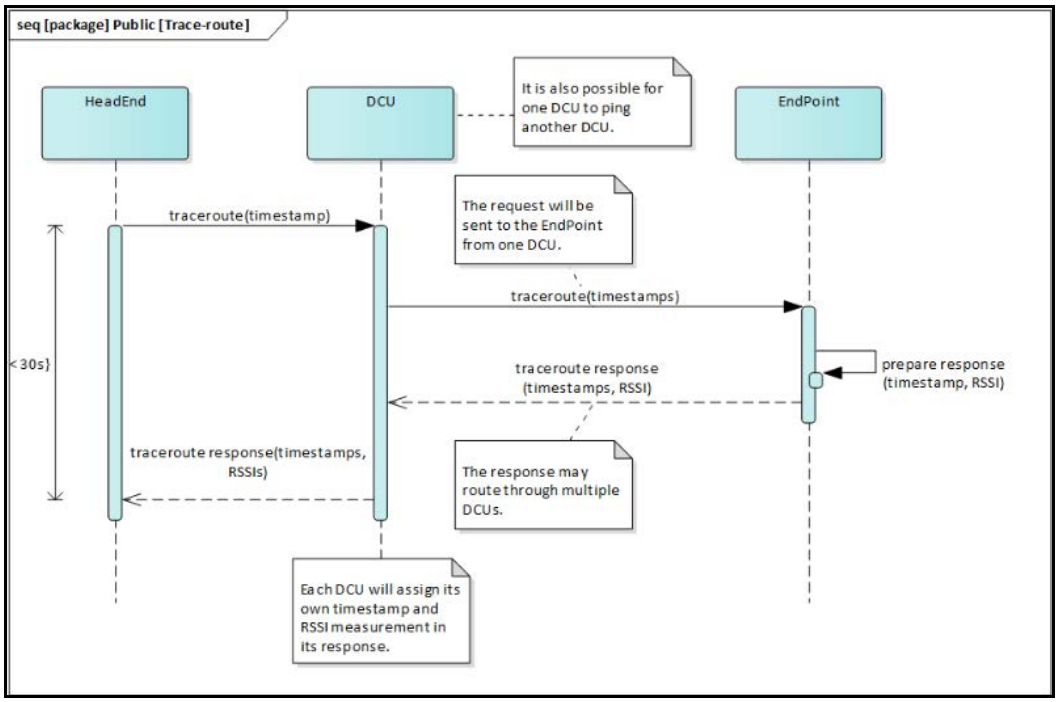

Other Messages

Other messages are sent over the network beyond the ones depicted here. These activities include:

- NIC firmware downloads
- NIC reconfiguration
- Historical recovery of daily shifted data
- Historical recovery of interval (LP) data
- Historical recovery of end device events (alarms)
- Meter firmware patch
- Meter reconfiguration (meter programming)
- Publication of engineering statistics
- Security certificate updates

Traffic Classification

The Aclara RF Network utilizes the concept of a traffic class to categorize the priority and urgency of a message. Messages from the headend that are deemed “high reliability” will be repeated multiple times by a given DCU and may be transmitted by more than one DCU. High priority messages will take precedence over lower priority messages in the DCU queues.

Phase Detection

With the proliferation of rooftop solar panels and electric vehicle charging stations, it is becoming increasingly important for the utility to know (with certainty) the names of the phases that each service transformer primary is connected to. Furthermore, distribution networks may employ polyphase delta-wye transformers at any point in the network, but particularly at substations. At some utilities, given the many storms and age of the lines, the quality of the maps can be found to be less than perfect. Therefore the labeling of the conductors may also be less than perfect. The purpose of the phase detection feature is to determine the phase of each meter relative to the source of power.

Generators create, and transmission lines carry, three phases. Most parts of the country call these A, B, and C. The rotation of the phases may be defined to be clockwise ABCABC… or counterclockwise CBACBA… Each of the three phases are displaced in time by 120° as depicted in the following image.

Figure 5.9 Phases A, B, and C

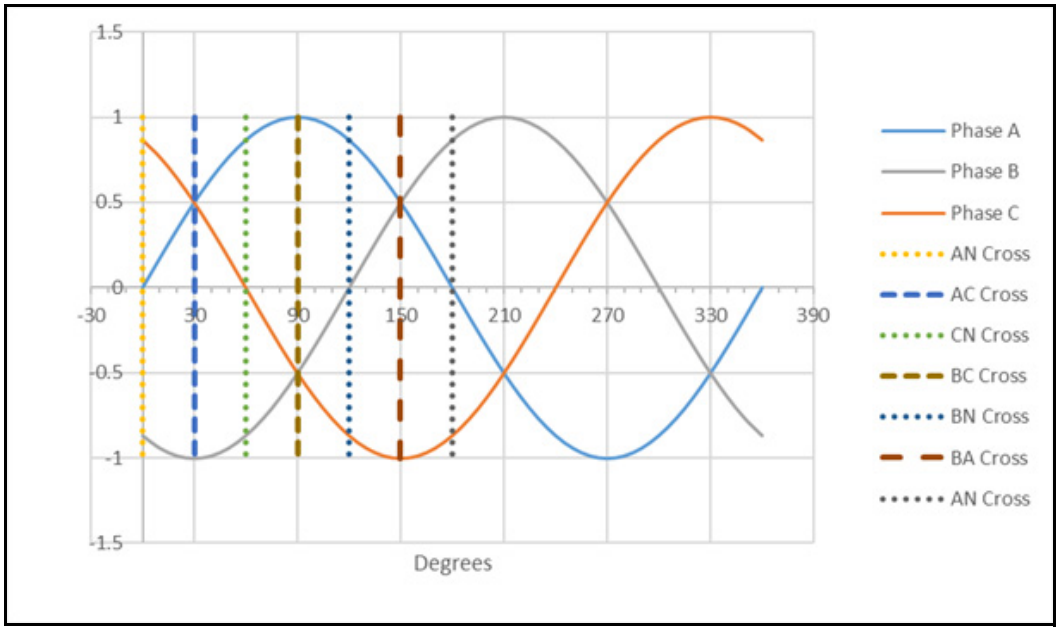

Transformer connections are able to shift the phase relationship. A single-phase transformer with its primary connection across A and B will cause the timing observed at the secondary to be AB. It will follow the BA waveform in the preceding image rather than AN or BN. In this way, an LV electrical service can be shifted to a different phase, or phasor than the source. In a similar manner, a polyphase delta-wye transformer will by its construction, shift power at the secondary by either +30° or -30°. Thus, a simple measurement of the phases delivered to a service can be transformed to be different than the phases that originate at power source. The phase detection feature will measure the phasor delivered to each service location relative to the phasor at the power source.

For the phase detection feature to work, at least one meter must be placed in or near a substation yard somewhere in the service territory, where the phase connection is known with good authority. This meter is known as a reference meter. The installer must note the connection of the reference meter, and this configuration must be entered into the headend. The reference meter must be within radio range of a DCU, and the same DCU must be within range of other meters in the network. There may be more than one reference meter installed at the utility, but they should all be on the same phasor. An AN connection is preferable. Once the system is activated, the headend will issue a phase detect beacon message to each DCU. Each DCU will broadcast the message to all meters within range.

Ordinarily a single reference meter is sufficient for a deployment. Imagine that the large blue circles in the following image represent the area that a DCU can cover.

Figure 5.10 DCU Coverage

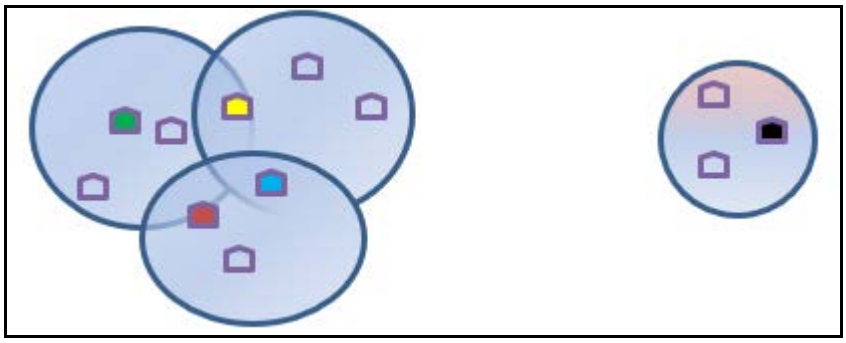

Ordinarily, RF infrastructure is deployed so that multiple DCUs cover the communication to each meter on each house. This DCU overlap is used to relate the findings within one survey to the findings of other surveys. For example, if the reference meter is at the green house, a single survey can determine the relationship of all of the other houses served by the same DCU to the reference meter. However, there must exist a house such as the yellow house and blue house, so that the surveys occurring at those DCUs can be joined with the original survey containing the (green) reference meter.

If the service infrastructure is not contiguous, or if overlapping units are not found, the results from the original reference survey cannot be joined with the results from the isolated locations. One or more additional reference meters must be installed and identified at these other locations (such as the black house on the right in the preceding image).

The installer must take careful notes as to the serial number of the reference meters and their phasor connections. This information must then be entered into a configuration table at the headend. The pieces will then be in place to allow the system to run surveys, collect measurements, analyze them, join surveys, filter noise, and ultimately determine the phase connections of the meters.

NOTE There is nothing special about the reference meters. The hardware is not different than any other meter. The installer's notes, and the claim by the installer to know the phase connection with good authority, is what makes a reference meter different from any other meter.

Phase detection surveys begin at the headend as depicted in the following image.

Figure 5.11 Phase Detection Messages

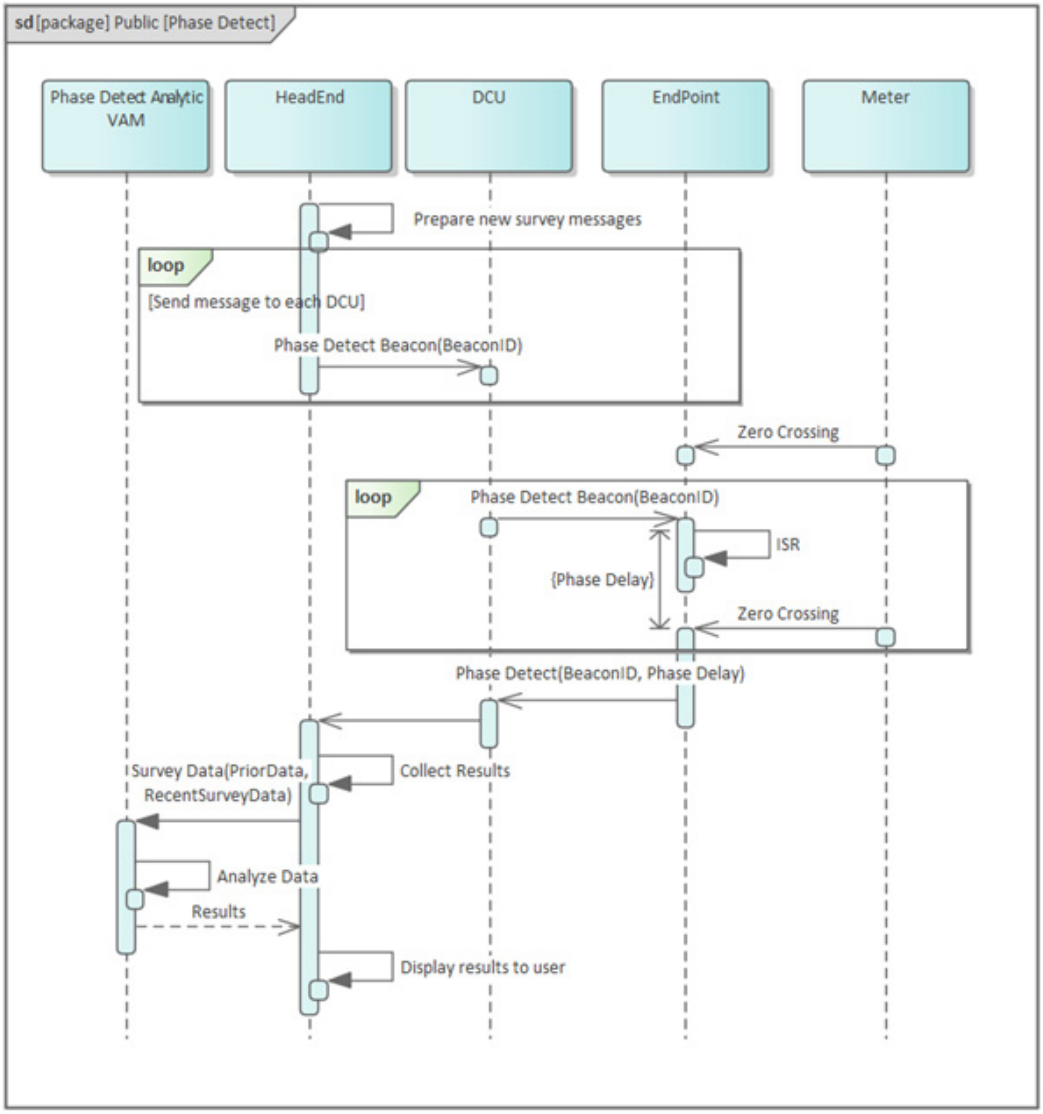

The headend will generate a unique ID number for each survey at each DCU. It will send the survey (beacon) command to the DCU for broadcast to all radios within range. The NICs within the meters will use the phase detect message broadcast to trigger a time measurement between the arrival of the message until the next voltage zero cross. This measurement, called phase delay, is reported back to the headend. A meter will likely hear multiple phase detect beacon messages from different DCUs all within the same survey period. The NICs send these messages back to DCUs, which in turn forward them to the headend. The headend sends these measurements to an analytic algorithm which is hosted in the cloud for additional processing. The analytic algorithm filters any remaining noise in the data to arrive at a conclusion regarding the phase connection of every meter relative to the reference meter(s).

Once the analytic algorithm determines the appropriate phasor for each meter it will present its findings to the headend. If the reference meter is given a named phase, then the headend can also determine the names of the phases each meter is connected to.

If the reference meter is attributed to an offset of 0°, all of the other phasors will be displaced by 30° relative to the reference value as depicted in Table 5 1.

Table 5.1 Angle to Phasor Equivalence

Nominal Angle	Phasor Number	
	CW Rotation	CCW Rotation
0°	p0	p0
30°	p1	p11
60°	p2	p10
90°	p3	p9
120°	p4	p8
150°	p5	p7
180°	p6	p6
210°	p7	p5
240°	p8	p4
270°	p9	p3
300°	p10	p2
330°	p11	p1
360°	p0	p0

If, for example, the reference meter is connected AN, then labels can be assigned to each of the phasors as depicted in Table 5 2.

Table 5.2 Example Phasor Name to Number Mapping

Phasor Number	Phasor Name
p0	A
p1	AC
p2	C
p3	BC
p4	B
p5	BA
p6	-A
p7	CA
p8	-C
p9	CB

Table 5.2 Example Phasor Name to Number Mapping

Phasor Number	Phasor Name
p10	-B
p11	AB

The headend will offer a mapping configuration in which phasor names may be attributed to phasor numbers. The Phasor Name attributed to each Phasor Number is configurable at the headend for a number of reasons:

1. The reference meter(s) may be placed on any phase. The system must be configured to accommodate their location.
2. The utility may not wish to make the distinction between a phasor and its inversion, e.g., AB and BA.
3. The utility may not wish to use the letters ABC but XYZ or some other naming convention.

It is expected that multiple surveys will be required before sufficient data has been collected to render a result. With surveys issued once a day, it may take several days of data collection before sufficient data is available. As deployments roll out, one may also find that an inadequate number of meters have been deployed, or that sufficient DCU infrastructure has not been deployed. A full analysis will likely have to wait for a full deployment to occur, however, it is still possible to test the system in a small-scale setting or in the lab.

If one or more meters appears to not converge to a solution for the phase connection, there may be an underlying issue that is preventing it. The possible causes include:

- Incorrect headend or DCU configuration: The headend must have a traffic class selected to send the phase detect beacon (resource "/pd") as a low reliability message. It must only be transmitted one time by the DCU. The high reliability traffic class will cause the DCU to repeat the message. This will create multiple messages with the same beacon ID. Most (but not all) duplicate transmissions will be rejected by the endoint population. The end result will be disagreement in the data as to what the correct measurement is for every phase being measured, and poor results from the analyzer.
- Poor power quality at the service location: Poor power quality can disrupt all sorts of devices including the phase detect function in the meter. Customers may note that numerous other electronic devices misbehave. Locations with poor power quality will likely have high counts of momentary interruptions. Leading causes of poor power quality include:
  - failed components on the distribution network
  - high impedance faults
  - noisy loads
- Intermittent RF communication

- Fringe reception; this occurs when there is a great distance between the meter and the nearest DCU or hilly terrain between the meter and all DCUs
- Inadequate data collection due to incomplete infrastructure installation
- A large vehicle parked immediately in front of the meter blocking the communication path to the nearest DCU.
- Occasional RF spillover into the licensed band from other RF sources (which has not yet been reported to the FCC for investigation)

Sites that experience these problems will require more samples from the field equipment. The user at the head end should schedule additional surveys (or simply wait longer if surveys are being run periodically.) It may also help to perform phase detect surveys at various times during the day. Usually the level of noise in the distribution network is lower at off peak times of day. Vehicles which block the meter during off-peak times may be moved out of the way during peak times of day. It may also be necessary for some units to collect data when the wind is relatively calm and tree limbs are not slapping the line.

Supported Modes of Operation

NIC Modes

Figure 5.12 NIC Modes of Operation

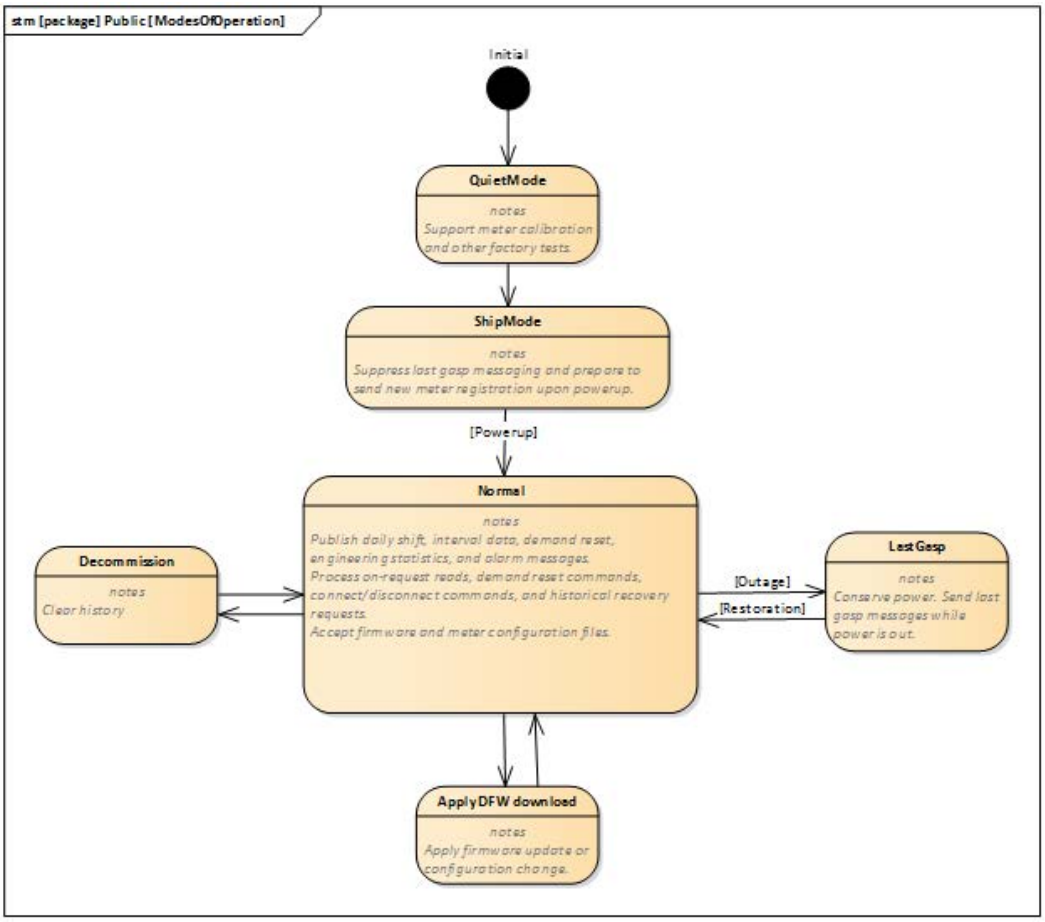

Once the NIC has powered up in the field, it may go into several different modes of operation. These are depicted in the preceding image. When an outage occurs, it stops reading the meter and publishing readings. Instead it goes into a power-conserving mode and sends last-gasp messages. When power is restored, it goes back into the normal mode and transmits a power restored alarm message. Similarly, while in the normal operating mode, it can accumulate firmware download packets and meter reconfiguration files. When the download is complete, they can be applied. A firmware upgrade causes the module to temporarily go offline and reboot.

Meter Softswitches

Meter softswitches are configured at the factory. A given switch must be enabled to unlock certain meter functionality. Once enabled by the meter, the NIC will support the feature as described in *Meter Softswitch Support* on page 35.

Table 5.3 Meter Softswitch Support

Softswitch	Description	NIC Support
A2	Alternate communication	This switch is required to enable communication between the NIC and the meter module.
E2	Event log	Supported
F2	Emergency Conservation Demand (ECD)	Supported, but requires meter reconfiguration to modify.
J2	Demand Limiting Function	Supported, but requires meter reconfiguration to modify.
K2	KVA and kvar measures	Supported
N2	Billing demands	Supported
Q2	Instrumentation measurements	Supported
R2	Load profile recording	Supported as described in sections 5.6 and 5.3.1.
T2	Time of Use recording	Supported
U2	Pre-payment metering	Not supported
V2	Sag/swell event log recording	Supported

Supported Measurements

It should be noted that the meter supports a wide variety of measurements, but the particular measurements available at any given time will be governed by the meter programming. An I-210+c is considered to be a demand meter, demand / load profile meter, or time of use / load profile meter depending on its softswitch enablements. The meter supports 8 Data Accumulations. From this it can support 4 billing measures and 2 demand measures. The values programmed in the meter as billing measures can be used for DS, OR, or DR messages. The values programmed as demand measures can be used in DR messages.

The choice of daily demand is done at the expense of monthly demand. They are mutually exclusive. MeterMate allows the meter to perform an Automatic Demand Reset at a user-specified period. If this is set to a Reset interval of 1 day, the meter will synthesize daily demand. Then, with the meter resetting demand every day, the NIC must be configured to collect previous demand values with the Daily Shift message.

It should be noted that when demand is enabled, both maximum demand and a cumulative demand will be captured by the meter and either or both may be reported.

Since a demand reset causes present maximum demand to be zeroed, and the timestamp for the maximum to be made invalid, it is recommended to not configure the module to report present maximum demand as part of a DR message. It could however be useful as a DS message for the CSR who wants to monitor progress towards a monthly maximum demand. For utilities that instead desire information regarding a daily maximum, previous maximum demand values, and the demand reset counter, these should be placed in the DS message list.

LP Data

The measurements supported by NIC firmware version 1.70 are listed in *LP Measurements Supported with NIC Firmware Version 1.70* on page 37.

The Load Profile Interval Length selected for one channel of LP data in the Aclara RF Network I-210+c applies to energy measurements in all channels. Selecting one interval size is done at the exclusion of other sizes. The duration mentioned in the maximum, average, or minimum values of voltage, current, or temperature refers to the duration over which the study was made. Voltage (for example) is measured cycle-by-cycle to identify the largest, the smallest, and to gather data to compute the average. At the end of the interval, the smallest voltage (measured over one cycle), the largest voltage (measured over one cycle) and the average voltage (measured over the entire LP interval length) is determined and the results published to the meter's LP tables. The NIC will in turn harvest these entries (if configured to do so) and report them to the headend via an interval message.

Table 5.4 LP Measurements Supported with NIC Firmware Version 1.70

IEC 619689-6 Appenidx C Code	IEC 61968-9 Description	Required Softswitches
0.0.7.4.1.1.12.0.0.0.0.0.0.0.3.72.0	sixtyMinute deltaData forward electricitySecondaryMetered energy (kWh)	R2
0.0.5.4.1.1.12.0.0.0.0.0.0.0.3.72.0	thirtyMinute deltaData forward electricitySecondaryMetered energy (kWh)	R2
0.0.2.4.1.1.12.0.0.0.0.0.0.0.3.72.0	fifteenMinute deltaData forward electricitySecondaryMetered energy (kWh)	R2
0.0.6.4.1.1.12.0.0.0.0.0.0.0.3.72.0	fiveMinute deltaData forward electricitySecondaryMetered energy (kWh)	R2
0.0.7.4.19.1.12.0.0.0.0.0.0.0.3.72.0	sixtyMinute deltaData reverse electricitySecondaryMetered energy (kWh)	R2
0.0.5.4.19.1.12.0.0.0.0.0.0.0.3.72.0	thirtyMinute deltaData reverse electricitySecondaryMetered energy (kWh)	R2
0.0.2.4.19.1.12.0.0.0.0.0.0.0.3.72.0	fifteenMinute deltaData reverse electricitySecondaryMetered energy (kWh)	R2
0.0.6.4.19.1.12.0.0.0.0.0.0.0.3.72.0	fiveMinute deltaData reverse electricitySecondaryMetered energy (kWh)	R2
0.0.7.4.20.1.12.0.0.0.0.0.0.0.3.72.0	sixtyMinute deltaData total electricitySecondaryMetered energy (kWh)	R2
0.0.5.4.20.1.12.0.0.0.0.0.0.0.3.72.0	thirtyMinute deltaData total electricitySecondaryMetered energy (kWh)	R2
0.0.2.4.20.1.12.0.0.0.0.0.0.0.3.72.0	fifteenMinute deltaData total electricitySecondaryMetered energy (kWh)	R2
0.0.6.4.20.1.12.0.0.0.0.0.0.0.3.72.0	fiveMinute deltaData total electricitySecondaryMetered energy (kWh)	R2
0.0.7.4.4.1.12.0.0.0.0.0.0.0.3.72.0	sixtyMinute deltaData net electricitySecondaryMetered energy (kWh)	R2
0.0.5.4.4.1.12.0.0.0.0.0.0.0.3.72.0	thirtyMinute deltaData net electricitySecondaryMetered energy (kWh)	R2
0.0.2.4.4.1.12.0.0.0.0.0.0.0.3.72.0	fifteenMinute deltaData net electricitySecondaryMetered energy (kWh)	R2
0.0.6.4.4.1.12.0.0.0.0.0.0.0.3.72.0	fiveMinute deltaData net electricitySecondaryMetered energy (kWh)	R25
0.0.7.4.1.1.12.0.0.0.0.0.0.0.3.73.0	sixtyMinute deltaData forward electricitySecondaryMetered energy (kVArh)	R2, K2
0.0.5.4.1.1.12.0.0.0.0.0.0.0.3.73.0	thirtyMinute deltaData forward electricitySecondaryMetered energy (kVArh)	R2, K2
0.0.2.4.1.1.12.0.0.0.0.0.0.0.3.73.0	fifteenMinute deltaData forward electricitySecondaryMetered energy (kVArh)	R2, K2
0.0.6.4.1.1.12.0.0.0.0.0.0.0.3.73.0	fiveMinute deltaData forward electricitySecondaryMetered energy (kVArh)	R2, K2
0.0.7.4.19.1.12.0.0.0.0.0.0.0.3.73.0	sixtyMinute deltaData reverse electricitySecondaryMetered energy (kVArh)	R2, K2

Table 5.4 LP Measurements Supported with NIC Firmware Version 1.70

IEC 619689-6 Appenidx C Code	IEC 61968-9 Description	Required Softswitches
0.0.5.4.19.1.12.0.0.0.0.0.0.0.3.73.0	thirtyMinute deltaData reverse electricitySecondaryMetered energy (kVArh)	R2, K2
0.0.2.4.19.1.12.0.0.0.0.0.0.0.3.73.0	fifteenMinute deltaData reverse electricitySecondaryMetered energy (kVArh)	R2, K2
0.0.6.4.19.1.12.0.0.0.0.0.0.0.3.73.0	fiveMinute deltaData reverse electricitySecondaryMetered energy (kVArh)	R2, K2
0.0.7.4.20.1.12.0.0.0.0.0.0.0.3.73.0	sixtyMinute deltaData total electricitySecondaryMetered energy (kVArh)	R2, K2
0.0.5.4.20.1.12.0.0.0.0.0.0.0.3.73.0	thirtyMinute deltaData total electricitySecondaryMetered energy (kVArh)	R2, K2
0.0.2.4.20.1.12.0.0.0.0.0.0.0.3.73.0	fifteenMinute deltaData total electricitySecondaryMetered energy (kVArh)	R2, K2
0.0.6.4.20.1.12.0.0.0.0.0.0.0.3.73.0	fiveMinute deltaData total electricitySecondaryMetered energy (kVArh)	R2, K2
0.0.7.4.4.1.12.0.0.0.0.0.0.0.3.73.0	sixtyMinute deltaData net electricitySecondaryMetered energy (kVArh)	R2, K2
0.0.5.4.4.1.12.0.0.0.0.0.0.0.3.73.0	thirtyMinute deltaData net electricitySecondaryMetered energy (kVArh)	R2, K2
0.0.2.4.4.1.12.0.0.0.0.0.0.0.3.73.0	fifteenMinute deltaData net electricitySecondaryMetered energy (kVArh)	R2, K2
0.0.6.4.4.1.12.0.0.0.0.0.0.0.3.73.0	fiveMinute deltaData net electricitySecondaryMetered energy (kVArh)	R2, K2
0.0.7.4.20.1.12.0.0.0.0.0.0.0.3.71.0	sixtyMinute deltaData total electricitySecondaryMetered energy (kVAh)	R2, K2
0.0.5.4.20.1.12.0.0.0.0.0.0.0.3.71.0	thirtyMinute deltaData total electricitySecondaryMetered energy (kVAh)	R2, K2
0.0.2.4.20.1.12.0.0.0.0.0.0.0.3.71.0	fifteenMinute deltaData total electricitySecondaryMetered energy (kVAh)	R2, K2
0.0.6.4.20.1.12.0.0.0.0.0.0.0.3.71.0	fiveMinute deltaData total electricitySecondaryMetered energy (kVAh)	R2, K2
0.8.7.0.0.1.54.0.0.0.0.0.0.0.128.0.29.0	maximum sixtyMinute electricitySecondaryMetered voltage-rms phaseA (V)	R2, Q2
0.8.5.0.0.1.54.0.0.0.0.0.0.0.128.0.29.0	maximum thirtyMinute electricitySecondaryMetered voltage-rms phaseA (V)	R2, Q2

Table 5.4 LP Measurements Supported with NIC Firmware Version 1.70

IEC 619689-6 Appenidx C Code	IEC 61968-9 Description	Required Softswitches
0.8.2.0.0.1.54.0.0.0.0.0.0.0.128.0.29.0	maximum fifteenMinute electricitySecondaryMetered voltage-rms phaseA (V)	R2, Q2
0.8.6.0.0.1.54.0.0.0.0.0.0.0.128.0.29.0	maximum fiveMinute electricitySecondaryMetered voltage-rms phaseA (V)	R2, Q2
0.0.0.6.0.1.54.0.0.0.0.0.0.0.128.0.29.0	indicating electricitySecondaryMetered voltage-rms phaseA (V)	R2, Q2
0.9.7.0.0.1.54.0.0.0.0.0.0.0.128.0.29.0	minimum sixtyMinute electricitySecondaryMetered voltage-rms phaseA (V)	R2, Q2
0.9.5.0.0.1.54.0.0.0.0.0.0.0.128.0.29.0	minimum thirtyMinute electricitySecondaryMetered voltage-rms phaseA (V)	R2, Q2
0.9.2.0.0.1.54.0.0.0.0.0.0.0.128.0.29.0	minimum fifteenMinute electricitySecondaryMetered voltage-rms phaseA (V)	R2, Q2
0.9.6.0.0.1.54.0.0.0.0.0.0.0.128.0.29.0	minimum fiveMinute electricitySecondaryMetered voltage-rms phaseA (V)	R2, Q2
0.2.7.6.0.1.54.0.0.0.0.0.0.0.128.0.29.0	average sixtyMinute indicating electricitySecondaryMetered voltage-rms phaseA(V)	R2, Q2
0.2.5.6.0.1.54.0.0.0.0.0.0.0.128.0.29.0	average thirtyMinute indicating electricitySecondaryMetered voltage-rms phaseA (V)	R2, Q2
0.2.2.6.0.1.54.0.0.0.0.0.0.0.128.0.29.0	average fifteenMinute indicating electricitySecondaryMetered voltage-rms phaseA (V)	R2, Q2
0.2.6.6.0.1.54.0.0.0.0.0.0.0.128.0.29.0	average fiveMinute indicating electricitySecondaryMetered voltage-rms phaseA (V)	R2, Q2
0.8.7.6.0.1.46.0.0.0.0.0.0.0.0.0.23.0	maximum sixtyMinute indicating electricitySecondaryMetered temperature (°C)	R2
0.8.5.6.0.1.46.0.0.0.0.0.0.0.0.0.23.0	maximum thirtyMinute indicating electricitySecondaryMetered temperature (°C)	R2
0.8.2.6.0.1.46.0.0.0.0.0.0.0.0.0.23.0	maximum fifteenMinute indicating electricitySecondaryMetered temperature (°C)	R2
0.8.6.6.0.1.46.0.0.0.0.0.0.0.0.0.23.0	maximum fiveMinute indicating electricitySecondaryMetered temperature (°C)	R2
0.0.0.6.0.1.46.0.0.0.0.0.0.0.0.0.23.0	indicating electricitySecondaryMetered temperature (°C)	R2
0.9.7.6.0.1.46.0.0.0.0.0.0.0.0.0.23.0	minimum sixtyMinute indicating electricitySecondaryMetered temperature (°C)	R2
0.9.5.6.0.1.46.0.0.0.0.0.0.0.0.0.23.0	minimum thirtyMinute indicating electricitySecondaryMetered temperature (°C)	R2

Table 5.4 LP Measurements Supported with NIC Firmware Version 1.70

IEC 619689-6 Appenidx C Code	IEC 61968-9 Description	Required Softswitches
0.9.2.6.0.1.46.0.0.0.0.0.0.0.0.0.23.0	minimum fifteenMinute indicating electricitySecondaryMetered temperature (°C)	R2
0.9.6.6.0.1.46.0.0.0.0.0.0.0.0.0.23.0	minimum fiveMinute indicating electricitySecondaryMetered temperature (°C)	R2
0.8.7.0.0.1.4.0.0.0.0.0.0.0.128.0.5.0	maximum sixtyMinute electricitySecondaryMetered current phaseA (A)	R2
0.8.5.0.0.1.4.0.0.0.0.0.0.0.128.0.5.0	maximum thirtyMinute electricitySecondaryMetered current phaseA (A)	R2
0.8.2.0.0.1.4.0.0.0.0.0.0.0.128.0.5.0	maximum fifteenMinute electricitySecondaryMetered current phaseA (A)	R2
0.8.6.0.0.1.4.0.0.0.0.0.0.0.128.0.5.0	maximum fiveMinute electricitySecondaryMetered current phaseA (A)	R2
0.0.0.6.0.1.4.0.0.0.0.0.0.0.128.0.5.0	indicating electricitySecondaryMetered current phaseA (A)	R2
0.9.7.0.0.1.4.0.0.0.0.0.0.0.128.0.5.0	minimum sixtyMinute electricitySecondaryMetered current phaseA (A)	R2
0.9.5.0.0.1.4.0.0.0.0.0.0.0.128.0.5.0	minimum thirtyMinute electricitySecondaryMetered current phaseA (A)	R2
0.9.2.0.0.1.4.0.0.0.0.0.0.0.128.0.5.0	minimum fifteenMinute electricitySecondaryMetered current phaseA (A)	R2
0.9.6.0.0.1.4.0.0.0.0.0.0.0.128.0.5.0	minimum fiveMinute electricitySecondaryMetered current phaseA (A)	R2
0.2.7.6.0.1.4.0.0.0.0.0.0.0.128.0.5.0	average sixtyMinute indicating electricitySecondaryMetered current phaseA(A)	R2
0.2.5.6.0.1.4.0.0.0.0.0.0.0.128.0.5.0	average thirtyMinute indicating electricitySecondaryMetered current phaseA (A)	R2
0.2.2.6.0.1.4.0.0.0.0.0.0.0.128.0.5.0	average fifteenMinute indicating electricitySecondaryMetered current phaseA (A)	R2
0.2.6.6.0.1.4.0.0.0.0.0.0.0.128.0.5.0	average fiveMinute indicating electricitySecondaryMetered current phaseA (A)	R2
0.8.7.0.0.1.4.0.0.0.0.0.0.0.32.0.5.0	maximum sixtyMinute electricitySecondaryMetered current phaseC (A)	R2
0.8.5.0.0.1.4.0.0.0.0.0.0.0.32.0.5.0	maximum thirtyMinute electricitySecondaryMetered current phaseC (A)	R2
0.8.2.0.0.1.4.0.0.0.0.0.0.0.32.0.5.0	maximum fifteenMinute electricitySecondaryMetered current phaseC (A)	R2

Table 5.4 LP Measurements Supported with NIC Firmware Version 1.70

IEC 619689-6 Appenidx C Code	IEC 61968-9 Description	Required Softswitches
0.8.6.0.0.1.4.0.0.0.0.0.0.0.32.0.5.0	maximum fiveMinute electricitySecondaryMetered current phaseC (A)	R2
0.0.0.6.0.1.4.0.0.0.0.0.0.0.32.0.5.0	indicating electricitySecondaryMetered current phaseC (A)	R2
0.9.7.0.0.1.4.0.0.0.0.0.0.0.32.0.5.0	minimum sixtyMinute electricitySecondaryMetered current phaseC (A)	R2
0.9.5.0.0.1.4.0.0.0.0.0.0.0.32.0.5.0	minimum thirtyMinute electricitySecondaryMetered current phaseC (A)	R2
0.9.2.0.0.1.4.0.0.0.0.0.0.0.32.0.5.0	minimum fifteenMinute electricitySecondaryMetered current phaseC (A)	R2
0.9.6.0.0.1.4.0.0.0.0.0.0.0.32.0.5.0	minimum fiveMinute electricitySecondaryMetered current phaseC (A)	R2
0.2.7.6.0.1.4.0.0.0.0.0.0.0.32.0.5.0	average sixtyMinute indicating electricitySecondaryMetered current phaseC(A)	R2
0.2.5.6.0.1.4.0.0.0.0.0.0.0.32.0.5.0	average thirtyMinute indicating electricitySecondaryMetered current phaseC (A)	R2
0.2.2.6.0.1.4.0.0.0.0.0.0.0.32.0.5.0	average fifteenMinute indicating electricitySecondaryMetered current phaseC (A)	R2
0.2.6.6.0.1.4.0.0.0.0.0.0.0.32.0.5.0	average fiveMinute indicating electricitySecondaryMetered current phaseC (A)	R2
0.2.7.6.0.1.46.0.0.0.0.0.0.0.0.0.23.0	average sixtyMinute indicating electricitySecondaryMetered temperature (˚C)	R2
0.2.5.6.0.1.46.0.0.0.0.0.0.0.0.0.23.0	average thirtyMinute indicating electricitySecondaryMetered temperature (˚C)	R2
0.2.2.6.0.1.46.0.0.0.0.0.0.0.0.0.23.0	average fifteenMinute indicating electricitySecondaryMetered temperature (˚C)	R2
0.2.6.6.0.1.46.0.0.0.0.0.0.0.0.0.23.0	average fiveMinute indicating electricitySecondaryMetered temperature (˚C)	R2

NOTES Additional measurements may be supported in a future firmware release.

The I-210+c includes harmonics in its measurements. To obtain a “fundamental only” measurement of energy one must use a meter such as the KV2c.

Daily Shifted (DS), On-Request (OR), and Demand Reset (DR) Quantities

The DS, OR, and DR measurements supported by NIC firmware version 1.70 are listed in Table 5.5.

Table 5.5 Measurement Supported by NIC Firmware Version 1.70 within Daily Shifted and On-Request Messages

IEC 61968-9 Appendix C Code	IEC 61968-9 Description	Required Softswitches
0.0.0.1.1.1.12.0.0.0.0.0.0.0.3.72.0	bulkQuantity forward electricitySecondaryMetered energy (kWh)	
0.0.0.1.19.1.12.0.0.0.0.0.0.0.3.72.0	bulkQuantity reverse electricitySecondaryMetered energy (kWh)	
0.0.0.1.20.1.12.0.0.0.0.0.0.0.3.72.0	bulkQuantity total electricitySecondaryMetered energy (kWh)	
0.0.0.1.4.1.12.0.0.0.0.0.0.0.3.72.0	bulkQuantity net electricitySecondaryMetered energy (kWh)	
0.0.0.1.1.1.12.0.0.0.0.0.0.0.3.73.0	bulkQuantity forward electricitySecondaryMetered energy (kVArh)	K2
0.0.0.1.19.1.12.0.0.0.0.0.0.0.3.73.0	bulkQuantity reverse electricitySecondaryMetered energy (kVArh)	K2
0.0.0.1.20.1.12.0.0.0.0.0.0.0.3.73.0	bulkQuantity total electricitySecondaryMetered energy (kVArh)	K2
0.0.0.1.4.1.12.0.0.0.0.0.0.0.3.73.0	bulkQuantity net electricitySecondaryMetered energy (kVArh)	K2
0.0.0.1.20.1.12.0.0.0.0.0.0.0.3.71.0	bulkQuantity total electricitySecondaryMetered energy (kVAh)	K2
0.0.0.1.0.1.11.0.0.0.0.0.0.0.0.111.0	bulkQuantity electricitySecondaryMetered energization (count)	
0.0.0.1.0.1.122.0.0.0.0.0.0.0.0.111.0	bulkQuantity electricitySecondaryMetered demandReset (count)	
0.0.0.1.0.1.41.0.0.0.0.0.0.0.0.111.0	bulkQuantity electricitySecondaryMetered sag (count)	V2
0.0.0.1.0.1.42.0.0.0.0.0.0.0.0.111.0	bulkQuantity electricitySecondaryMetered swell (count)	V2
0.0.0.1.0.1.137.0.0.0.0.0.0.0.0.111.0	bulkQuantity electricitySecondaryMetered powerQuality (count)	

Table 5.5 Measurement Supported by NIC Firmware Version 1.70 within Daily Shifted and On-Request Messages

IEC 61968-9 Appendix C Code	IEC 61968-9 Description	Required Softswitches
0.0.0.1.0.1.43.0.0.0.0.0.0.0.0.0.111.0	bulkQuantity electricitySecondaryMetered switchPosition (count)	
0.0.0.9.1.1.12.0.0.0.0.1.0.0.0.3.72.0	summation forward electricitySecondaryMetered energy touA (kWh)	T2
0.0.0.9.19.1.12.0.0.0.0.1.0.0.0.3.72.0	summation reverse electricitySecondaryMetered energy touA (kWh)	T2
0.0.0.9.20.1.12.0.0.0.0.1.0.0.0.3.72.0	summation total electricitySecondaryMetered energy touA (kWh)	T2
0.0.0.9.4.1.12.0.0.0.0.1.0.0.0.3.72.0	summation net electricitySecondaryMetered energy touA (kWh)	T2
0.0.0.9.1.1.12.0.0.0.0.1.0.0.0.3.73.0	summation forward electricitySecondaryMetered energy touA (kVArh)	K2, T2
0.0.0.9.19.1.12.0.0.0.0.1.0.0.0.3.73.0	summation reverse electricitySecondaryMetered energy touA (kVArh)	K2, T2
0.0.0.9.20.1.12.0.0.0.0.1.0.0.0.3.73.0	summation total electricitySecondaryMetered energy touA (kVArh)	K2, T2
0.0.0.9.4.1.12.0.0.0.0.1.0.0.0.3.73.0	summation net electricitySecondaryMetered energy touA (kVArh)	K2, T2
0.0.0.9.20.1.12.0.0.0.0.1.0.0.0.3.71.0	summation total electricitySecondaryMetered energy touA (kVAh)	K2, T2
0.0.0.9.1.1.12.0.0.0.0.2.0.0.0.3.72.0	summation forward electricitySecondaryMetered energy touB (kWh)	T2
0.0.0.9.19.1.12.0.0.0.0.2.0.0.0.3.72.0	summation reverse electricitySecondaryMetered energy touB (kWh)	T2
0.0.0.9.20.1.12.0.0.0.0.2.0.0.0.3.72.0	summation total electricitySecondaryMetered energy touB (kWh)	T2
0.0.0.9.4.1.12.0.0.0.0.2.0.0.0.3.72.0	summation net electricitySecondaryMetered energy touB (kWh)	T2
0.0.0.9.1.1.12.0.0.0.0.2.0.0.0.3.73.0	summation forward electricitySecondaryMetered energy touB (kVArh)	K2, T2
0.0.0.9.19.1.12.0.0.0.0.2.0.0.0.3.73.0	summation reverse electricitySecondaryMetered energy touB (kVArh)	K2, T2
0.0.0.9.20.1.12.0.0.0.0.2.0.0.0.3.73.0	summation total electricitySecondaryMetered energy touB (kVArh)	K2, T2

Table 5.5 Measurement Supported by NIC Firmware Version 1.70 within Daily Shifted and On-Request Messages

IEC 61968-9 Appendix C Code	IEC 61968-9 Description	Required Softswitches
0.0.0.9.4.1.12.0.0.0.0.2.0.0.0.3.73.0	summation net electricitySecondaryMetered energy touB (kVArh)	K2, T2
0.0.0.9.20.1.12.0.0.0.0.2.0.0.0.3.71.0	summation total electricitySecondaryMetered energy touB (kVAh)	K2, T2
0.0.0.9.1.1.12.0.0.0.0.3.0.0.0.3.72.0	summation forward electricitySecondaryMetered energy touC (kWh)	T2
0.0.0.9.19.1.12.0.0.0.0.3.0.0.0.3.72.0	summation reverse electricitySecondaryMetered energy touC (kWh)	T2
0.0.0.9.20.1.12.0.0.0.0.3.0.0.0.3.72.0	summation total electricitySecondaryMetered energy touC (kWh)	T2
0.0.0.9.4.1.12.0.0.0.0.3.0.0.0.3.72.0	summation net electricitySecondaryMetered energy touC (kWh)	T2
0.0.0.9.1.1.12.0.0.0.0.3.0.0.0.3.73.0	summation forward electricitySecondaryMetered energy touC (kVArh)	K2, T2
0.0.0.9.19.1.12.0.0.0.0.3.0.0.0.3.73.0	summation reverse electricitySecondaryMetered energy touC (kVArh)	K2, T2
0.0.0.9.20.1.12.0.0.0.0.3.0.0.0.3.73.0	summation total electricitySecondaryMetered energy touC (kVArh)	K2, T2
0.0.0.9.4.1.12.0.0.0.0.3.0.0.0.3.73.0	summation net electricitySecondaryMetered energy touC (kVArh)	K2, T2
0.0.0.9.20.1.12.0.0.0.0.3.0.0.0.3.71.0	summation total electricitySecondaryMetered energy touC (kVAh)	K2, T2
0.0.0.9.1.1.12.0.0.0.0.4.0.0.0.3.72.0	summation forward electricitySecondaryMetered energy touD (kWh)	T2
0.0.0.9.19.1.12.0.0.0.0.4.0.0.0.3.72.0	summation reverse electricitySecondaryMetered energy touD (kWh)	T2
0.0.0.9.20.1.12.0.0.0.0.4.0.0.0.3.72.0	summation total electricitySecondaryMetered energy touD (kWh)	T2
0.0.0.9.4.1.12.0.0.0.0.4.0.0.0.3.72.0	summation net electricitySecondaryMetered energy touD (kWh)	T2
0.0.0.9.1.1.12.0.0.0.0.4.0.0.0.3.73.0	summation forward electricitySecondaryMetered energy touD (kVArh)	K2, T2
0.0.0.9.19.1.12.0.0.0.0.4.0.0.0.3.73.0	summation reverse electricitySecondaryMetered energy touD (kVArh)	K2, T2

Table 5.5 Measurement Supported by NIC Firmware Version 1.70 within Daily Shifted and On-Request Messages

IEC 61968-9 Appendix C Code	IEC 61968-9 Description	Required Softswitches
0.0.0.9.20.1.12.0.0.0.0.4.0.0.0.3.73.0	summation total electricitySecondaryMetered energy touD (kVArh)	K2, T2
0.0.0.9.4.1.12.0.0.0.0.4.0.0.0.3.73.0	summation net electricitySecondaryMetered energy touD (kVArh)	K2, T2
0.0.0.9.20.1.12.0.0.0.0.4.0.0.0.3.71.0	summation total electricitySecondaryMetered energy touD (kVAh)	K2, T2
0.0.0.6.4.1.37.0.0.0.0.0.0.0.0.3.38.0	indicating net electricitySecondaryMetered power (kW)	
0.0.0.6.0.1.54.0.0.0.0.0.0.0.128.0.29.0	indicating electricitySecondaryMetered voltage-rms phaseA (V)	Q2
0.0.0.6.0.1.54.0.0.0.0.0.0.0.32.0.29.0	indicating electricitySecondaryMetered voltage-rms phaseC (V)	Q2
0.0.0.6.0.1.38.0.0.0.0.0.0.0.0.0.65.0	indicating electricitySecondaryMetered powerFactor (cosΘ)	
0.0.0.6.0.1.46.0.0.0.0.0.0.0.0.0.23.0	indicating electricitySecondaryMetered temperature (°C)	
0.0.0.6.0.1.4.0.0.0.0.0.0.0.128.0.5.0	indicating electricitySecondaryMetered current phaseA (A)	
0.0.0.6.0.1.4.0.0.0.0.0.0.0.32.0.5.0	indicating electricitySecondaryMetered current phaseC (A)	
0.0.0.0.0.1.43.0.0.0.0.0.0.0.0.0.109.0	electricitySecondaryMetered switchPosition (status)	
0.11.0.0.0.1.43.0.0.0.0.0.0.0.0.0.109.0	nominal electricitySecondaryMetered switchPosition (status)	
0.0.0.0.0.1.13.0.0.0.0.0.0.0.0.0.109.0	electricitySecondaryMetered energizationLoadSide (status)	
0.0.0.6.0.41.7.0.0.0.0.0.0.0.0.0.108.0	indicating device date (timeStamp)	
0.8.15.6.1.1.8.0.0.0.0.0.0.0.0.3.38.0	maximum present indicating forward electricitySecondaryMetered demand (kW)	N2
0.8.15.6.19.1.8.0.0.0.0.0.0.0.0.3.38.0	maximum present indicating reverse electricitySecondaryMetered demand (kW)	N2
0.8.15.6.20.1.8.0.0.0.0.0.0.0.0.3.38.0	maximum present indicating total electricitySecondaryMetered demand (kW)	N2
0.8.15.6.4.1.8.0.0.0.0.0.0.0.0.3.38.0	maximum present indicating net electricitySecondaryMetered demand (kW)	N2
0.8.15.6.1.1.8.0.0.0.0.0.0.0.0.3.63.0	maximum present indicating forward electricitySecondaryMetered demand (kVAr)	K2, N2
0.8.15.6.19.1.8.0.0.0.0.0.0.0.0.3.63.0	maximum present indicating reverse electricitySecondaryMetered demand (kVAr)	K2, N2

Table 5.5 Measurement Supported by NIC Firmware Version 1.70 within Daily Shifted and On-Request Messages

IEC 61968-9 Appendix C Code	IEC 61968-9 Description	Required Softswitches
0.8.15.6.20.1.8.0.0.0.0.0.0.0.0.3.63.0	maximum present indicating total electricitySecondaryMetered demand (kVAr)	K2, N2
0.8.15.6.4.1.8.0.0.0.0.0.0.0.0.3.63.0	maximum present indicating net electricitySecondaryMetered demand (kVAr)	K2, N2
0.8.15.6.20.1.8.0.0.0.0.0.0.0.0.3.61.0	maximum present indicating total electricitySecondaryMetered demand (kVA)	K2, N2
0.8.15.6.1.1.8.0.0.0.0.1.0.0.0.3.38.0	Maximum present indicating forward electricitySecondaryMetered demand touA (kW)	N2
0.8.15.6.19.1.8.0.0.0.0.1.0.0.0.3.38.0	maximum present indicating reverse electricitySecondaryMetered demand touA (kW)	N2
0.8.15.6.20.1.8.0.0.0.0.1.0.0.0.3.38.0	maximum present indicating total electricitySecondaryMetered demand touA (kW)	N2, T2
0.8.15.6.4.1.8.0.0.0.0.1.0.0.0.3.38.0	maximum present indicating net electricitySecondaryMetered demand touA (kW)	N2, K2
0.8.15.6.1.1.8.0.0.0.0.1.0.0.0.3.63.0	maximum present indicating forward electricitySecondaryMetered demand touA (kVAr)	K2, N2, T2
0.8.15.6.19.1.8.0.0.0.0.1.0.0.0.3.63.0	maximum present indicating reverse electricitySecondaryMetered demand touA (kVAr)	K2, N2, T2
0.8.15.6.20.1.8.0.0.0.0.1.0.0.0.3.63.0	maximum present indicating total electricitySecondaryMetered demand touA (kVAr)	K2, N2, T2
0.8.15.6.4.1.8.0.0.0.0.1.0.0.0.3.63.0	maximum present indicating net electricitySecondaryMetered demand touA (kVAr)	K2, N2, T2
0.8.15.6.20.1.8.0.0.0.0.1.0.0.0.3.61.0	maximum present indicating total electricitySecondaryMetered demand touA (kVA)	K2, N2, T2
0.8.15.6.1.1.8.0.0.0.0.2.0.0.0.3.38.0	Maximum present indicating forward electricitySecondaryMetered demand touB (kW)	N2, T2
0.8.15.6.19.1.8.0.0.0.0.1.0.0.0.3.38.0	maximum present indicating reverse electricitySecondaryMetered demand touB (kW)	N2, T2
0.8.15.6.20.1.8.0.0.0.0.2.0.0.0.3.38.0	maximum present indicating total electricitySecondaryMetered demand touB (kW)	N2, T2
0.8.15.6.4.1.8.0.0.0.0.2.0.0.0.3.38.0	maximum present indicating net electricitySecondaryMetered demand touB (kW)	N2, T2
0.8.15.6.1.1.8.0.0.0.0.2.0.0.0.3.63.0	maximum present indicating forward electricitySecondaryMetered demand touB (kVAr)	K2, N2, T2

Table 5.5 Measurement Supported by NIC Firmware Version 1.70 within Daily Shifted and On-Request Messages

IEC 61968-9 Appendix C Code	IEC 61968-9 Description	Required Softswitches
0.8.15.6.19.1.8.0.0.0.0.2.0.0.0.3.63.0	maximum present indicating reverse electricitySecondaryMetered demand touB (kVAr)	K2, N2, T2
0.8.15.6.20.1.8.0.0.0.0.2.0.0.0.3.63.0	maximum present indicating total electricitySecondaryMetered demand touB (kVAr)	K2, N2, T2
0.8.15.6.4.1.8.0.0.0.0.2.0.0.0.3.63.0	maximum present indicating net electricitySecondaryMetered demand touB (kVAr)	K2, N2, T2
0.8.15.6.20.1.8.0.0.0.0.2.0.0.0.3.61.0	maximum present indicating total electricitySecondaryMetered demand touB (kVA)	K2, N2, T2
0.8.15.6.1.1.8.0.0.0.0.3.0.0.0.3.38.0	Maximum present indicating forward electricitySecondaryMetered demand touC (kW)	N2, T2
0.8.15.6.19.1.8.0.0.0.0.3.0.0.0.3.38.0	maximum present indicating reverse electricitySecondaryMetered demand touC (kW)	N2, T2
0.8.15.6.20.1.8.0.0.0.0.3.0.0.0.3.38.0	maximum present indicating total electricitySecondaryMetered demand touC (kW)	N2, T2
0.8.15.6.4.1.8.0.0.0.0.3.0.0.0.3.38.0	maximum present indicating net electricitySecondaryMetered demand touC (kW)	N2, T2
0.8.15.6.1.1.8.0.0.0.0.3.0.0.0.3.63.0	maximum present indicating forward electricitySecondaryMetered demand touC (kVAr)	K2, N2, T2
0.8.15.6.19.1.8.0.0.0.0.3.0.0.0.3.63.0	maximum present indicating reverse electricitySecondaryMetered demand touC (kVAr)	K2, N2, T2
0.8.15.6.20.1.8.0.0.0.0.3.0.0.0.3.63.0	maximum present indicating total electricitySecondaryMetered demand touC (kVAr)	K2, N2, T2
0.8.15.6.4.1.8.0.0.0.0.3.0.0.0.3.63.0	maximum present indicating net electricitySecondaryMetered demand touC (kVAr)	K2, N2, T2
0.8.15.6.20.1.8.0.0.0.0.3.0.0.0.3.61.0	maximum present indicating total electricitySecondaryMetered demand touC (kVA)	N2, T2
0.8.15.6.1.1.8.0.0.0.0.4.0.0.0.3.38.0	Maximum present indicating forward electricitySecondaryMetered demand touD (kW)	N2, T2
0.8.15.6.19.1.8.0.0.0.0.4.0.0.0.3.38.0	maximum present indicating reverse electricitySecondaryMetered demand touD (kW)	N2, T2
0.8.15.6.20.1.8.0.0.0.0.4.0.0.0.3.38.0	maximum present indicating total electricitySecondaryMetered demand touD (kW)	N2, T2
0.8.15.6.4.1.8.0.0.0.0.4.0.0.0.3.38.0	maximum present indicating net electricitySecondaryMetered demand touD (kW)	N2, T2

Table 5.5 Measurement Supported by NIC Firmware Version 1.70 within Daily Shifted and On-Request Messages

IEC 61968-9 Appendix C Code	IEC 61968-9 Description	Required Softswitches
0.8.15.6.1.1.8.0.0.0.0.4.0.0.0.3.63.0	maximum present indicating forward electricitySecondaryMetered demand touD (kVAr)	K2, N2, T2
0.8.15.6.19.1.8.0.0.0.0.4.0.0.0.3.63.0	maximum present indicating reverse electricitySecondaryMetered demand touD (kVAr)	K2, N2, T2
0.8.15.6.20.1.8.0.0.0.0.4.0.0.0.3.63.0	maximum present indicating total electricitySecondaryMetered demand touD (kVAr)	K2, N2, T2
0.8.15.6.4.1.8.0.0.0.0.4.0.0.0.3.63.0	maximum present indicating net electricitySecondaryMetered demand touD (kVAr)	K2, N2, T2
0.8.15.6.20.1.8.0.0.0.0.4.0.0.0.3.61.0	maximum present indicating total electricitySecondaryMetered demand touD (kVA)	K2, N2, T2
0.8.16.6.1.1.8.0.0.0.0.0.0.0.0.3.38.0	maximum previous indicating forward electricitySecondaryMetered demand (kW)	N2
0.8.16.6.19.1.8.0.0.0.0.0.0.0.0.3.38.0	maximum previous indicating reverse electricitySecondaryMetered demand (kW)	N2
0.8.16.6.20.1.8.0.0.0.0.0.0.0.0.3.38.0	maximum previous indicating total electricitySecondaryMetered demand (kW)	N2
0.8.16.6.4.1.8.0.0.0.0.0.0.0.0.3.38.0	maximum previous indicating net electricitySecondaryMetered demand (kW)	N2
0.8.16.6.1.1.8.0.0.0.0.0.0.0.0.3.63.0	maximum previous indicating forward electricitySecondaryMetered demand (kVAr)	K2, N2
0.8.16.6.19.1.8.0.0.0.0.0.0.0.0.3.63.0	maximum previous indicating reverse electricitySecondaryMetered demand (kVAr)	K2, N2
0.8.16.6.20.1.8.0.0.0.0.0.0.0.0.3.63.0	maximum previous indicating total electricitySecondaryMetered demand (kVAr)	K2, N2
0.8.16.6.4.1.8.0.0.0.0.0.0.0.0.3.63.0	maximum previous indicating net electricitySecondaryMetered demand (kVAr)	K2, N2
0.8.16.6.20.1.8.0.0.0.0.0.0.0.0.3.61.0	maximum previous indicating total electricitySecondaryMetered demand (kVA)	K2, N2
0.8.16.6.1.1.8.0.0.0.0.1.0.0.0.3.38.0	Maximum previous indicating forward electricitySecondaryMetered demand touA (kW)	N2
0.8.16.6.19.1.8.0.0.0.0.1.0.0.0.3.38.0	maximum previous indicating reverse electricitySecondaryMetered demand touA (kW)	N2
0.8.16.6.20.1.8.0.0.0.0.1.0.0.0.3.38.0	maximum previous indicating total electricitySecondaryMetered demand touA (kW)	N2, T2

Table 5.5 Measurement Supported by NIC Firmware Version 1.70 within Daily Shifted and On-Request Messages

IEC 61968-9 Appendix C Code	IEC 61968-9 Description	Required Softswitches
0.8.16.6.4.1.8.0.0.0.0.1.0.0.0.3.38.0	maximum previous indicating net electricitySecondaryMetered demand touA (kW)	N2, T2
0.8.16.6.1.1.8.0.0.0.0.1.0.0.0.3.63.0	maximum previous indicating forward electricitySecondaryMetered demand touA (kVAr)	K2, N2, T2
0.8.16.6.19.1.8.0.0.0.0.1.0.0.0.3.63.0	maximum previous indicating reverse electricitySecondaryMetered demand touA (kVAr)	K2, N2, T2
0.8.16.6.20.1.8.0.0.0.0.1.0.0.0.3.63.0	maximum previous indicating total electricitySecondaryMetered demand touA (kVAr)	K2, N2, T2
0.8.16.6.4.1.8.0.0.0.0.1.0.0.0.3.63.0	maximum previous indicating net electricitySecondaryMetered demand touA (kVAr)	K2, N2, T2
0.8.16.6.20.1.8.0.0.0.0.1.0.0.0.3.61.0	maximum previous indicating total electricitySecondaryMetered demand touA (kVA)	K2, N2, T2
0.8.16.6.1.1.8.0.0.0.0.2.0.0.0.3.38.0	Maximum previous indicating forward electricitySecondaryMetered demand touB (kW)	N2, T2
0.8.16.6.19.1.8.0.0.0.0.2.0.0.0.3.38.0	maximum previous indicating reverse electricitySecondaryMetered demand touB (kW)	N2, T2
0.8.16.6.20.1.8.0.0.0.0.2.0.0.0.3.38.0	maximum previous indicating total electricitySecondaryMetered demand touB (kW)	N2, T2
0.8.16.6.4.1.8.0.0.0.0.2.0.0.0.3.38.0	maximum previous indicating net electricitySecondaryMetered demand touB (kW)	N2, T2
0.8.16.6.1.1.8.0.0.0.0.2.0.0.0.3.63.0	maximum previous indicating forward electricitySecondaryMetered demand touB (kVAr)	K2, N2, T2
0.8.16.6.19.1.8.0.0.0.0.2.0.0.0.3.63.0	maximum previous indicating reverse electricitySecondaryMetered demand touB (kVAr)	K2, N2, T2
0.8.16.6.20.1.8.0.0.0.0.2.0.0.0.3.63.0	maximum previous indicating total electricitySecondaryMetered demand touB (kVAr)	K2, N2, T2
0.8.16.6.4.1.8.0.0.0.0.2.0.0.0.3.63.0	maximum previous indicating net electricitySecondaryMetered demand touB (kVAr)	K2, N2, T2
0.8.16.6.20.1.8.0.0.0.0.2.0.0.0.3.61.0	maximum previous indicating total electricitySecondaryMetered demand touB (kVA)	K2, N2, T2
0.8.16.6.1.1.8.0.0.0.0.3.0.0.0.3.38.0	Maximum previous indicating forward electricitySecondaryMetered demand touC (kW)	N2, T2
0.8.16.6.19.1.8.0.0.0.0.3.0.0.0.3.38.0	maximum previous indicating reverse electricitySecondaryMetered demand touC (kW)	N2, T2

Table 5.5 Measurement Supported by NIC Firmware Version 1.70 within Daily Shifted and On-Request Messages

IEC 61968-9 Appendix C Code	IEC 61968-9 Description	Required Softswitches
0.8.16.6.20.1.8.0.0.0.0.3.0.0.0.3.38.0	maximum previous indicating total electricitySecondaryMetered demand touC (kW)	N2, T2
0.8.16.6.4.1.8.0.0.0.0.3.0.0.0.3.38.0	maximum previous indicating net electricitySecondaryMetered demand touC (kW)	N2, T2
0.8.16.6.1.1.8.0.0.0.0.3.0.0.0.3.63.0	maximum previous indicating forward electricitySecondaryMetered demand touC (kVAr)	K2, N2, T2
0.8.16.6.19.1.8.0.0.0.0.3.0.0.0.3.63.0	maximum previous indicating reverse electricitySecondaryMetered demand touC (kVAr)	K2, N2, T2
0.8.16.6.20.1.8.0.0.0.0.3.0.0.0.3.63.0	maximum previous indicating total electricitySecondaryMetered demand touC (kVAr)	K2, N2, T2
0.8.16.6.4.1.8.0.0.0.0.3.0.0.0.3.63.0	maximum previous indicating net electricitySecondaryMetered demand touC (kVAr)	K2, N2, T2
0.8.16.6.20.1.8.0.0.0.0.3.0.0.0.3.61.0	maximum previous indicating total electricitySecondaryMetered demand touC (kVA)	K2, N2, T2
0.8.16.6.1.1.8.0.0.0.0.4.0.0.0.3.38.0	Maximum previous indicating forward electricitySecondaryMetered demand touD (kW)	N2, T2
0.8.16.6.19.1.8.0.0.0.0.4.0.0.0.3.38.0	maximum previous indicating reverse electricitySecondaryMetered demand touD (kW)	N2, T2
0.8.16.6.20.1.8.0.0.0.0.4.0.0.0.3.38.0	maximum previous indicating total electricitySecondaryMetered demand touD (kW)	N2, T2
0.8.16.6.4.1.8.0.0.0.0.4.0.0.0.3.38.0	maximum previous indicating net electricitySecondaryMetered demand touD (kW)	N2, T2
0.8.16.6.1.1.8.0.0.0.0.4.0.0.0.3.63.0	maximum previous indicating forward electricitySecondaryMetered demand touD (kVAr)	K2, N2, T2
0.8.16.6.19.1.8.0.0.0.0.4.0.0.0.3.63.0	maximum previous indicating reverse electricitySecondaryMetered demand touD (kVAr)	K2, N2, T2
0.8.16.6.20.1.8.0.0.0.0.4.0.0.0.3.63.0	maximum previous indicating total electricitySecondaryMetered demand touD (kVAr)	K2, N2, T2
0.8.16.6.4.1.8.0.0.0.0.4.0.0.0.3.63.0	maximum previous indicating net electricitySecondaryMetered demand touD (kVAr)	K2, N2, T2
0.8.16.6.20.1.8.0.0.0.0.4.0.0.0.3.61.0	maximum previous indicating total electricitySecondaryMetered demand touD (kVA)	K2, N2, T2
0.0.15.3.1.1.8.0.0.0.0.0.0.0.0.3.38.0	present cumulative forward electricitySecondaryMetered demand (kW)	N2

Table 5.5 Measurement Supported by NIC Firmware Version 1.70 within Daily Shifted and On-Request Messages

IEC 61968-9 Appendix C Code	IEC 61968-9 Description	Required Softswitches
0.0.15.3.19.1.8.0.0.0.0.0.0.0.0.3.38.0	present cumulative reverse electricitySecondaryMetered demand (kW)	N2
0.0.15.3.20.1.8.0.0.0.0.0.0.0.0.3.38.0	present cumulative total electricitySecondaryMetered demand (kW)	N2
0.0.15.3.4.1.8.0.0.0.0.0.0.0.0.3.38.0	present cumulative net electricitySecondaryMetered demand (kW)	N2
0.0.15.3.1.1.8.0.0.0.0.0.0.0.0.3.63.0	present cumulative forward electricitySecondaryMetered demand (kVAr)	K2, N2
0.0.15.3.19.1.8.0.0.0.0.0.0.0.0.3.63.0	present cumulative reverse electricitySecondaryMetered demand (kVAr)	K2, N2
0.0.15.3.20.1.8.0.0.0.0.0.0.0.0.3.63.0	present cumulative total electricitySecondaryMetered demand (kVAr)	K2, N2
0.0.15.3.4.1.8.0.0.0.0.0.0.0.0.3.63.0	present cumulative net electricitySecondaryMetered demand (kVAr)	K2, N2
0.0.15.3.20.1.8.0.0.0.0.0.0.0.0.3.61.0	present cumulative total electricitySecondaryMetered demand (kVA)	K2, N2
0.0.15.3.1.1.8.0.0.0.0.1.0.0.0.3.38.0	present cumulative forward electricitySecondaryMetered demand touA (kW)	N2, T2
0.0.15.3.19.1.8.0.0.0.0.1.0.0.0.3.38.0	present cumulative reverse electricitySecondaryMetered demand touA (kW)	N2, T2
0.0.15.3.20.1.8.0.0.0.0.1.0.0.0.3.38.0	present cumulative total electricitySecondaryMetered demand touA (kW)	N2, T2
0.0.15.3.4.1.8.0.0.0.0.1.0.0.0.3.38.0	present cumulative net electricitySecondaryMetered demand touA (kW)	N2, T2
0.0.15.3.1.1.8.0.0.0.0.1.0.0.0.3.63.0	present cumulative forward electricitySecondaryMetered demand touA (kVAr)	K2, N2, T2
0.0.15.3.19.1.8.0.0.0.0.1.0.0.0.3.63.0	present cumulative reverse electricitySecondaryMetered demand touA (kVAr)	K2, N2, T2
0.0.15.3.20.1.8.0.0.0.0.1.0.0.0.3.63.0	present cumulative total electricitySecondaryMetered demand touA (kVAr)	K2, N2, T2
0.0.15.3.4.1.8.0.0.0.0.1.0.0.0.3.63.0	present cumulative net electricitySecondaryMetered demand touA (kVAr)	K2, N2, T2
0.0.15.3.20.1.8.0.0.0.0.1.0.0.0.3.61.0	present cumulative total electricitySecondaryMetered demand touA (kVA)	K2, N2, T2

Table 5.5 Measurement Supported by NIC Firmware Version 1.70 within Daily Shifted and On-Request Messages

IEC 61968-9 Appendix C Code	IEC 61968-9 Description	Required Softswitches
0.0.15.3.1.1.8.0.0.0.0.2.0.0.0.3.38.0	present cumulative forward electricitySecondaryMetered demand touB (kW)	N2, T2
0.0.15.3.19.1.8.0.0.0.0.2.0.0.0.3.38.0	present cumulative reverse electricitySecondaryMetered demand touB (kW)	N2, T2
0.0.15.3.20.1.8.0.0.0.0.2.0.0.0.3.38.0	present cumulative total electricitySecondaryMetered demand touB (kW)	N2, T2
0.0.15.3.4.1.8.0.0.0.0.2.0.0.0.3.38.0	present cumulative net electricitySecondaryMetered demand touB (kW)	N2, T2
0.0.15.3.1.1.8.0.0.0.0.2.0.0.0.3.63.0	present cumulative forward electricitySecondaryMetered demand touB (kVAr)	K2, N2, T2
0.0.15.3.19.1.8.0.0.0.0.2.0.0.0.3.63.0	present cumulative reverse electricitySecondaryMetered demand touB (kVAr)	K2, N2, T2
0.0.15.3.20.1.8.0.0.0.0.2.0.0.0.3.63.0	present cumulative total electricitySecondaryMetered demand touB (kVAr)	K2, N2, T2
0.0.15.3.4.1.8.0.0.0.0.2.0.0.0.3.63.0	present cumulative net electricitySecondaryMetered demand touB (kVAr)	K2, N2, T2
0.0.15.3.20.1.8.0.0.0.0.2.0.0.0.3.61.0	present cumulative total electricitySecondaryMetered demand touB (kVA)	K2, N2, T2
0.0.15.3.1.1.8.0.0.0.0.3.0.0.0.3.38.0	present cumulative forward electricitySecondaryMetered demand touC (kW)	N2, T2
0.0.15.3.19.1.8.0.0.0.0.3.0.0.0.3.38.0	present cumulative reverse electricitySecondaryMetered demand touC (kW)	N2, T2
0.0.15.3.20.1.8.0.0.0.0.3.0.0.0.3.38.0	present cumulative total electricitySecondaryMetered demand touC (kW)	N2, T2
0.0.15.3.4.1.8.0.0.0.0.3.0.0.0.3.38.0	present cumulative net electricitySecondaryMetered demand touC (kW)	N2, T2
0.0.15.3.1.1.8.0.0.0.0.3.0.0.0.3.63.0	present cumulative forward electricitySecondaryMetered demand touC (kVAr)	K2, N2, T2
0.0.15.3.19.1.8.0.0.0.0.3.0.0.0.3.63.0	present cumulative reverse electricitySecondaryMetered demand touC (kVAr)	K2, N2, T2
0.0.15.3.20.1.8.0.0.0.0.3.0.0.0.3.63.0	present cumulative total electricitySecondaryMetered demand touC (kVAr)	K2, N2, T2
0.0.15.3.4.1.8.0.0.0.0.3.0.0.0.3.63.0	present cumulative net electricitySecondaryMetered demand touC (kVAr)	K2, N2, T2

Table 5.5 Measurement Supported by NIC Firmware Version 1.70 within Daily Shifted and On-Request Messages

IEC 61968-9 Appendix C Code	IEC 61968-9 Description	Required Softswitches
0.0.15.3.20.1.8.0.0.0.0.3.0.0.0.3.61.0	present cumulative total electricitySecondaryMetered demand touC (kVA)	K2, N2, T2
0.0.15.3.1.1.8.0.0.0.0.4.0.0.0.3.38.0	present cumulative forward electricitySecondaryMetered demand touD (kW)	N2, T2
0.0.15.3.19.1.8.0.0.0.0.4.0.0.0.3.38.0	present cumulative reverse electricitySecondaryMetered demand touD (kW)	N2, T2
0.0.15.3.20.1.8.0.0.0.0.4.0.0.0.3.38.0	present cumulative total electricitySecondaryMetered demand touD (kW)	N2, T2
0.0.15.3.4.1.8.0.0.0.0.4.0.0.0.3.38.0	present cumulative net electricitySecondaryMetered demand touD (kW)	N2, T2
0.0.15.3.1.1.8.0.0.0.0.4.0.0.0.3.63.0	present cumulative forward electricitySecondaryMetered demand touD (kVAr)	K2, N2, T2
0.0.15.3.19.1.8.0.0.0.0.4.0.0.0.3.63.0	present cumulative reverse electricitySecondaryMetered demand touD (kVAr)	K2, N2, T2
0.0.15.3.20.1.8.0.0.0.0.4.0.0.0.3.63.0	present cumulative total electricitySecondaryMetered demand touD (kVAr)	K2, N2, T2
0.0.15.3.4.1.8.0.0.0.0.4.0.0.0.3.63.0	present cumulative net electricitySecondaryMetered demand touD (kVAr)	K2, N2, T2
0.0.15.3.20.1.8.0.0.0.0.4.0.0.0.3.61.0	present cumulative total electricitySecondaryMetered demand touD (kVA)	K2, N2, T2
0.0.16.3.1.1.8.0.0.0.0.0.0.0.0.3.38.0	previous cumulative forward electricitySecondaryMetered demand (kW)	N2
0.0.16.3.19.1.8.0.0.0.0.0.0.0.0.3.38.0	previous cumulative reverse electricitySecondaryMetered demand (kW)	N2
0.0.16.3.20.1.8.0.0.0.0.0.0.0.0.3.38.0	previous cumulative total electricitySecondaryMetered demand (kW)	N2
0.0.16.3.4.1.8.0.0.0.0.0.0.0.0.3.38.0	previous cumulative net electricitySecondaryMetered demand (kW)	N2
0.0.16.3.1.1.8.0.0.0.0.0.0.0.0.3.63.0	previous cumulative forward electricitySecondaryMetered demand (kVAr)	K2, N2
0.0.16.3.19.1.8.0.0.0.0.0.0.0.0.3.63.0	previous cumulative reverse electricitySecondaryMetered demand (kVAr)	K2, N2
0.0.16.3.20.1.8.0.0.0.0.0.0.0.0.3.63.0	previous cumulative total electricitySecondaryMetered demand (kVAr)	K2, N2

Table 5.5 Measurement Supported by NIC Firmware Version 1.70 within Daily Shifted and On-Request Messages

IEC 61968-9 Appendix C Code	IEC 61968-9 Description	Required Softswitches
0.0.16.3.4.1.8.0.0.0.0.0.0.0.0.3.63.0	previous cumulative net electricitySecondaryMetered demand (kVAr)	K2, N2
0.0.16.3.20.1.8.0.0.0.0.0.0.0.0.3.61.0	previous cumulative total electricitySecondaryMetered demand (kVA)	K2, N2
0.0.16.3.1.1.8.0.0.0.0.1.0.0.0.3.38.0	previous cumulative forward electricitySecondaryMetered demand touA (kW)	N2, T2
0.0.16.3.19.1.8.0.0.0.0.1.0.0.0.3.38.0	previous cumulative reverse electricitySecondaryMetered demand touA (kW)	N2, T2
0.0.16.3.20.1.8.0.0.0.0.1.0.0.0.3.38.0	previous cumulative total electricitySecondaryMetered demand touA (kW)	N2, T2
0.0.16.3.4.1.8.0.0.0.0.1.0.0.0.3.38.0	previous cumulative net electricitySecondaryMetered demand touA (kW)	N2, T2
0.0.16.3.1.1.8.0.0.0.0.1.0.0.0.3.63.0	previous cumulative forward electricitySecondaryMetered demand touA (kVAr)	K2, N2, T2
0.0.16.3.19.1.8.0.0.0.0.1.0.0.0.3.63.0	previous cumulative reverse electricitySecondaryMetered demand touA (kVAr)	K2, N2, T2
0.0.16.3.20.1.8.0.0.0.0.1.0.0.0.3.63.0	previous cumulative total electricitySecondaryMetered demand touA (kVAr)	K2, N2, T2
0.0.16.3.4.1.8.0.0.0.0.1.0.0.0.3.63.0	previous cumulative net electricitySecondaryMetered demand touA (kVAr)	K2, N2, T2
0.0.16.3.20.1.8.0.0.0.0.1.0.0.0.3.61.0	previous cumulative total electricitySecondaryMetered demand touA (kVA)	K2, N2, T2
0.0.16.3.1.1.8.0.0.0.0.2.0.0.0.3.38.0	previous cumulative forward electricitySecondaryMetered demand touB (kW)	N2, T2
0.0.16.3.19.1.8.0.0.0.0.2.0.0.0.3.38.0	previous cumulative reverse electricitySecondaryMetered demand touB (kW)	N2, T2
0.0.16.3.20.1.8.0.0.0.0.2.0.0.0.3.38.0	previous cumulative total electricitySecondaryMetered demand touB (kW)	N2, T2
0.0.16.3.4.1.8.0.0.0.0.2.0.0.0.3.38.0	previous cumulative net electricitySecondaryMetered demand touB (kW)	N2, T2
0.0.16.3.1.1.8.0.0.0.0.2.0.0.0.3.63.0	previous cumulative forward electricitySecondaryMetered demand touB (kVAr)	K2, N2, T2
0.0.16.3.19.1.8.0.0.0.0.2.0.0.0.3.63.0	previous cumulative reverse electricitySecondaryMetered demand touB (kVAr)	K2, N2, T2

Table 5.5 Measurement Supported by NIC Firmware Version 1.70 within Daily Shifted and On-Request Messages

IEC 61968-9 Appendix C Code	IEC 61968-9 Description	Required Softswitches
0.0.16.3.20.1.8.0.0.0.0.2.0.0.0.3.63.0	previous cumulative total electricitySecondaryMetered demand touB (kVAr)	K2, N2, T2
0.0.16.3.4.1.8.0.0.0.0.2.0.0.0.3.63.0	previous cumulative net electricitySecondaryMetered demand touB (kVAr)	K2, N2, T2
0.0.16.3.20.1.8.0.0.0.0.2.0.0.0.3.61.0	previous cumulative total electricitySecondaryMetered demand touB (kVA)	K2, N2, T2
0.0.16.3.1.1.8.0.0.0.0.3.0.0.0.3.38.0	previous cumulative forward electricitySecondaryMetered demand touC (kW)	N2, T2
0.0.16.3.19.1.8.0.0.0.0.3.0.0.0.3.38.0	previous cumulative reverse electricitySecondaryMetered demand touC (kW)	N2, T2
0.0.16.3.20.1.8.0.0.0.0.3.0.0.0.3.38.0	previous cumulative total electricitySecondaryMetered demand touC (kW)	N2, T2
0.0.16.3.4.1.8.0.0.0.0.3.0.0.0.3.38.0	previous cumulative net electricitySecondaryMetered demand touC (kW)	N2, T2
0.0.16.3.1.1.8.0.0.0.0.3.0.0.0.3.63.0	previous cumulative forward electricitySecondaryMetered demand touC (kVAr)	K2, N2, T2
0.0.16.3.19.1.8.0.0.0.0.3.0.0.0.3.63.0	previous cumulative reverse electricitySecondaryMetered demand touC (kVAr)	K2, N2, T2
0.0.16.3.20.1.8.0.0.0.0.3.0.0.0.3.63.0	previous cumulative total electricitySecondaryMetered demand touC (kVAr)	K2, N2, T2
0.0.16.3.4.1.8.0.0.0.0.3.0.0.0.3.63.0	previous cumulative net electricitySecondaryMetered demand touC (kVAr)	K2, N2, T2
0.0.16.3.20.1.8.0.0.0.0.3.0.0.0.3.61.0	previous cumulative total electricitySecondaryMetered demand touC (kVA)	K2, N2, T2
0.0.16.3.1.1.8.0.0.0.0.4.0.0.0.3.38.0	previous cumulative forward electricitySecondaryMetered demand touD (kW)	N2, T2
0.0.16.3.19.1.8.0.0.0.0.4.0.0.0.3.38.0	previous cumulative reverse electricitySecondaryMetered demand touD (kW)	N2, T2
0.0.16.3.20.1.8.0.0.0.0.4.0.0.0.3.38.0	previous cumulative total electricitySecondaryMetered demand touD (kW)	N2, T2
0.0.16.3.4.1.8.0.0.0.0.4.0.0.0.3.38.0	previous cumulative net electricitySecondaryMetered demand touD (kW)	N2, T2
0.0.16.3.1.1.8.0.0.0.0.4.0.0.0.3.63.0	previous cumulative forward electricitySecondaryMetered demand touD (kVAr)	K2, N2, T2

Table 5.5 Measurement Supported by NIC Firmware Version 1.70 within Daily Shifted and On-Request Messages

IEC 61968-9 Appendix C Code	IEC 61968-9 Description	Required Softswitches
0.0.16.3.19.1.8.0.0.0.0.4.0.0.0.3.63.0	previous cumulative reverse electricitySecondaryMetered demand touD (kVAr)	K2, N2, T2
0.0.16.3.20.1.8.0.0.0.0.4.0.0.0.3.63.0	previous cumulative total electricitySecondaryMetered demand touD (kVAr)	K2, N2, T2
0.0.16.3.4.1.8.0.0.0.0.4.0.0.0.3.63.0	previous cumulative net electricitySecondaryMetered demand touD (kVAr)	K2, N2, T2
0.0.16.3.20.1.8.0.0.0.0.4.0.0.0.3.61.0	previous cumulative total electricitySecondaryMetered demand touD (kVA)	K2, N2, T2
0.0.16.1.1.1.12.0.0.0.0.0.0.0.0.3.72.0	previous bulkQuantity forward electricitySecondaryMetered energy (kWh)	
0.0.16.1.19.1.12.0.0.0.0.0.0.0.0.3.72.0	previous bulkQuantity reverse electricitySecondaryMetered energy (kWh)	
0.0.16.1.20.1.12.0.0.0.0.0.0.0.0.3.72.0	previous bulkQuantity total electricitySecondaryMetered energy (kWh)	
0.0.16.1.4.1.12.0.0.0.0.0.0.0.0.3.72.0	previous bulkQuantity net electricitySecondaryMetered energy (kWh)	
0.0.16.1.1.1.12.0.0.0.0.0.0.0.0.3.73.0	previous bulkQuantity forward electricitySecondaryMetered energy (kVArh)	K2
0.0.16.1.19.1.12.0.0.0.0.0.0.0.0.3.73.0	previous bulkQuantity reverse electricitySecondaryMetered energy (kVArh)	K2
0.0.16.1.20.1.12.0.0.0.0.0.0.0.0.3.73.0	previous bulkQuantity total electricitySecondaryMetered energy (kVArh)	K2
0.0.16.1.4.1.12.0.0.0.0.0.0.0.0.3.73.0	previous bulkQuantity net electricitySecondaryMetered energy (kVArh)	K2
0.0.16.1.20.1.12.0.0.0.0.0.0.0.0.3.71.0	previous bulkQuantity total electricitySecondaryMetered energy (kVAh)	K2
0.0.16.9.1.1.12.0.0.0.0.1.0.0.0.3.72.0	previous summation forward electricitySecondaryMetered energy touA (kWh)	T2
0.0.16.9.19.1.12.0.0.0.0.1.0.0.0.3.72.0	previous summation reverse electricitySecondaryMetered energy touA (kWh)	T2
0.0.16.9.20.1.12.0.0.0.0.1.0.0.0.3.72.0	previous summation total electricitySecondaryMetered energy touA (kWh)	T2
0.0.16.9.4.1.12.0.0.0.0.1.0.0.0.3.72.0	previous summation net electricitySecondaryMetered energy touA (kWh)	T2

Table 5.5 Measurement Supported by NIC Firmware Version 1.70 within Daily Shifted and On-Request Messages

IEC 61968-9 Appendix C Code	IEC 61968-9 Description	Required Softswitches
0.0.16.9.1.1.12.0.0.0.0.1.0.0.0.3.73.0	previous summation forward electricitySecondaryMetered energy touA (kVArh)	K2, T2
0.0.16.9.19.1.12.0.0.0.0.1.0.0.0.3.73.0	previous summation reverse electricitySecondaryMetered energy touA (kVArh)	K2, T2
0.0.16.9.20.1.12.0.0.0.0.1.0.0.0.3.73.0	previous summation total electricitySecondaryMetered energy touA (kVArh)	K2, T2
0.0.16.9.4.1.12.0.0.0.0.1.0.0.0.3.73.0	previous summation net electricitySecondaryMetered energy touA (kVArh)	K2, T2
0.0.16.9.20.1.12.0.0.0.0.1.0.0.0.3.71.0	previous summation total electricitySecondaryMetered energy touA (kVAh)	K2, T2
0.0.16.9.1.1.12.0.0.0.0.2.0.0.0.3.72.0	previous summation forward electricitySecondaryMetered energy touB (kWh)	T2
0.0.16.9.19.1.12.0.0.0.0.2.0.0.0.3.72.0	previous summation reverse electricitySecondaryMetered energy touB (kWh)	T2
0.0.16.9.20.1.12.0.0.0.0.2.0.0.0.3.72.0	previous summation total electricitySecondaryMetered energy touB (kWh)	T2
0.0.16.9.4.1.12.0.0.0.0.2.0.0.0.3.72.0	previous summation net electricitySecondaryMetered energy touB (kWh)	T2
0.0.16.9.1.1.12.0.0.0.0.2.0.0.0.3.73.0	previous summation forward electricitySecondaryMetered energy touB (kVArh)	K2, T2
0.0.16.9.19.1.12.0.0.0.0.2.0.0.0.3.73.0	previous summation reverse electricitySecondaryMetered energy touB (kVArh)	K2, T2
0.0.16.9.20.1.12.0.0.0.0.2.0.0.0.3.73.0	previous summation total electricitySecondaryMetered energy touB (kVArh)	K2, T2
0.0.16.9.4.1.12.0.0.0.0.2.0.0.0.3.73.0	previous summation net electricitySecondaryMetered energy touB (kVArh)	K2, T2
0.0.16.9.20.1.12.0.0.0.0.2.0.0.0.3.71.0	previous summation total electricitySecondaryMetered energy touB (kVAh)	K2, T2
0.0.16.9.1.1.12.0.0.0.0.3.0.0.0.3.72.0	previous summation forward electricitySecondaryMetered energy touC (kWh)	T2
0.0.16.9.19.1.12.0.0.0.0.3.0.0.0.3.72.0	previous summation reverse electricitySecondaryMetered energy touC (kWh)	T2
0.0.16.9.20.1.12.0.0.0.0.3.0.0.0.3.72.0	previous summation total electricitySecondaryMetered energy touC (kWh)	T2

Table 5.5 Measurement Supported by NIC Firmware Version 1.70 within Daily Shifted and On-Request Messages

IEC 61968-9 Appendix C Code	IEC 61968-9 Description	Required Softswitches
0.0.16.9.4.1.12.0.0.0.0.3.0.0.0.3.72.0	previous summation net electricitySecondaryMetered energy touC (kWh)	T2
0.0.16.9.1.1.12.0.0.0.0.3.0.0.0.3.73.0	previous summation forward electricitySecondaryMetered energy touC (kVArh)	K2, T2
0.0.16.9.19.1.12.0.0.0.0.3.0.0.0.3.73.0	previous summation reverse electricitySecondaryMetered energy touC (kVArh)	K2, T2
0.0.16.9.20.1.12.0.0.0.0.3.0.0.0.3.73.0	previous summation total electricitySecondaryMetered energy touC (kVArh)	K2, T2
0.0.16.9.4.1.12.0.0.0.0.3.0.0.0.3.73.0	previous summation net electricitySecondaryMetered energy touC (kVArh)	K2, T2
0.0.16.9.20.1.12.0.0.0.0.3.0.0.0.3.71.0	previous summation total electricitySecondaryMetered energy touC (kVAh)	K2, T2
0.0.16.9.1.1.12.0.0.0.0.4.0.0.0.3.72.0	previous summation forward electricitySecondaryMetered energy touD (kWh)	T2
0.0.16.9.19.1.12.0.0.0.0.4.0.0.0.3.72.0	previous summation reverse electricitySecondaryMetered energy touD (kWh)	T2
0.0.16.9.20.1.12.0.0.0.0.4.0.0.0.3.72.0	previous summation total electricitySecondaryMetered energy touD (kWh)	T2
0.0.16.9.4.1.12.0.0.0.0.4.0.0.0.3.72.0	previous summation net electricitySecondaryMetered energy touD (kWh)	T2
0.0.16.9.1.1.12.0.0.0.0.4.0.0.0.3.73.0	previous summation forward electricitySecondaryMetered energy touD (kVArh)	K2, T2
0.0.16.9.19.1.12.0.0.0.0.4.0.0.0.3.73.0	previous summation reverse electricitySecondaryMetered energy touD (kVArh)	K2, T2
0.0.16.9.20.1.12.0.0.0.0.4.0.0.0.3.73.0	previous summation total electricitySecondaryMetered energy touD (kVArh)	K2, T2
0.0.16.9.4.1.12.0.0.0.0.4.0.0.0.3.73.0	previous summation net electricitySecondaryMetered energy touD (kVArh)	K2, T2
0.0.16.9.20.1.12.0.0.0.0.4.0.0.0.3.71.0	previous summation total electricitySecondaryMetered energy touD (kVAh)	K2, T2
0.0.0.6.1.1.37.0.0.0.0.0.0.0.0.3.38.0	indicating forward electricitySecondaryMetered power (kW)	
0.0.0.6.19.1.37.0.0.0.0.0.0.0.0.3.38.0	indicating reverse electricitySecondaryMetered power (kW)	

Table 5.5 Measurement Supported by NIC Firmware Version 1.70 within Daily Shifted and On-Request Messages

IEC 61968-9 Appendix C Code	IEC 61968-9 Description	Required Softswitches
0.0.0.6.20.1.37.0.0.0.0.0.0.0.0.3.38.0	indicating total electricitySecondaryMetered power (kW)	
0.0.0.6.1.1.37.0.0.0.0.0.0.0.0.3.63.0	indicating forward electricitySecondaryMetered power (kVAr)	K2
0.0.0.6.19.1.37.0.0.0.0.0.0.0.0.3.63.0	indicating reverse electricitySecondaryMetered power (kVAr)	K2
0.0.0.6.20.1.37.0.0.0.0.0.0.0.0.3.63.4	indicating total electricitySecondaryMetered power (kVAr)	K2
0.0.0.6.4.1.37.0.0.0.0.0.0.0.0.3.63.0	indicating net electricitySecondaryMetered power (kVAr)	K2
0.0.0.6.20.1.37.0.0.0.0.0.0.0.0.3.61.0	indicating total electricitySecondaryMetered power (kVA)	K2

Reading Notes

Present demand values and present energy values are retrieved from ST23, whereas previous demand and energy values are obtained from ST25.

Maximum demand values ordinarily are accompanied by a timestamp that indicates when the maximum occurred. However, there are situations in which a present max demand timestamp will not be provided, or a zero value for time will be provided. These include:

- The meter is a demand only meter.
- The demand interval has not closed out since the last demand reset has occurred.
- The meter has not observed any usage for the specific unit of measure, e.g., kVAr, flow direction, e.g., reverse, and TOU tier (if any) combination since the last demand reset.

Zeroes that show up in present max demand can be transferred to the previous max demand with a demand reset.

If a zero value for time is sent from the meter, it will flow through the AMI system, and at AclaraONE be converted from UTC time to local time. This will cause occasional values for time to appear in the data representing sometime late in the day on Dec 31, 1969. The MDM and/or billing system must recognize that this timestamp is unreasonable and that with the zero value for the maximum, that no demand of the specified kind was registered by the meter since the last demand reset.

Supported Quality Codes

The Aclara RF I-210+c solution may provide any of the quality codes found in Table 5.6.

Table 5.6 Supported Quality Codes

Quality Code	Description	Definition	Severity
1.2.3	EndDevice.PowerQuality. ServiceDisconnectSwitching	Service Disconnect operated during this interval	1
1.2.32	EndDevice.PowerQuality. PowerFail	Outage during interval	1
1.4.1	EndDevice.DataCollectionRelated. OverflowConditionDetected	A numeric overflow condition for a reading value or pulse counter was detected in the meter.	3
1.4.2	EndDevice.DataCollectionRelated. ParitalInterval	Partial (short) interval due to clock change, power outage, or some similar event.	2
1.4.3	EndDevice.DataCollectionRelated. LongInterval	Long interval recorded due to a clock change or some similar event.	2
1.4.4	EndDevice.DataCollectionRelated. SkippedInterval	Skipped interval by the meter due to a clock change or similar event.	3
1.4.5	EndDevice.DataCollectionRelated. TestData	Data value was obtained while the equipment was in test mode.	3
1.4.6	EndDevice.DataCollectionRelated. ConfigurationChanged	The meter indicates that a configuration change has occurred that may affect the reading value or its interpretation.	3
1.4.9	EndDevice.DataCollectionRelated. ClockChanged	The meter reports that one or more changes to the clock time have occurred in this interval. (The clock change was metrologically significant for an interval of this size or it would not be reported.)	2
2.4.63	MeteringSystem.DataCollectionRelated. SignificantTimeBias	Time bias threshold exceeded during this reading. This value was captured at a time which differed from the target time by a metrologically significant amount.	2
2.5.257	MeteringSystem.unreasonable. errorCode	The EP has replaced the useful data with an error code. The <value> element, if present, represents an error code and not useful data. Note: The EP may supply a value simply because the protocol requires that a non-zero byte count be supplied in the message. The meter also sometimes substitutes values (such as 0x7fff) when it can't supply a measurement because the required hardware is missing. In either of these cases, whenever a placeholder code is supplied instead of an actual reading, the "knownMissingRead" error should also be supplied.	3
2.5.259	MeteringSystem.unreasonable. KnownMissingRead	Known missing read. (No amount of retries will allow the HE to retrieve such a reading.) Note: The value could be missing due to an internal error.	3
2.8.0	MeteringSystem.estimated. generic	Supplied value is an estimate.	2

Table 5.6 Supported Quality Codes

Quality Code	Description	Definition	Severity
1.10.0	EndDevice.Questionable.Indeterminate	Measurement was taken while meter hardware was operating outside its certified operating temperature range. The reading is therefore questionable. It is not necessarily wrong, but it can't be guaranteed to be right either.	2
2.6.1002	MeteringSystem.Validation. FailedRule1002	An attempt was made to write a value which was considered to be read-only, or to read a value which was considered to be write-only.	3
2.4.1	MeteringSystem.DataCollectionRelated. OverflowConditionDetected	An attempt was made to write a value into a space in EndPoint memory which was not large enough to hold it.	3
2.6.1001	MeteringSystem.Validation. FailedRule1001	An attempt was made to read from or write to an invalid or unknown ReadingTypeID	3
2.6.1003	MeteringSystem. Validation. FailedRule1003	An attempt was made to write to a value using a mistmatched typecast, and type conversion was not supported or allowed.	3

Table 5.7 Quality Code Severities

Severity	Name	Description
1	Notice	A noteworthy event has occurred, yet data is undamaged.
2	Warning	Data is damaged but potentially usable.
3	Severe	Data is damaged and believed to be unusable.

Supported Alarms

Alarms can come from many sources. These include:

- The meter event log (within the meter)
- The voltage event log (within the meter)
- Diagnostic indicators (within the meter and the NIC)
- Tamper indicators (within the meter)
- Last-gasp and power-restored messaging (from the NIC)

The NIC processes alarms by logging them and storing them in one of two messaging queues. One queue is for alarms published in real time, and the other for alarms which are published opportunistically (i.e. at the next opportunity - riding along with other data which is being published anyway.) Alarms have a default priority assigned to them. Alarms which have a priority above the real time alarm threshold (>170) are sent immediately in a dedicated alarm message. Alarms which have a priority which fall below the opportunistic alarm threshold (≤ 85) are discarded. Alarms between the two thresholds (85-170) are sent opportunistically.

To disable an alarm which originates in the meter, the meter must be programmed (configured) to not generate that alarm. In this way, unwanted (nuisance) alarms can be masked so that they are not communicated to the headend.

Table 5.8 Aclara RF Network I-210+c Supported Alarms

IEC 61968-9 Description	IEC 61968-9 Appendix E Code	Priority	Comment	Required Switches
electricMeter.temperature. threshold.maxLimitReached	3.35.261.93	254	Hot Socket alarm	
electricMeter.RCDswitch. Connected	3.31.0.42	250		
electricMeter.RCDswitch. Disconnected	3.31.0.68	250		
comDevice.temperature. threshold.maxLimitReached	26.35.261.93	205	Temperatures are so high that the radio transmitter is about to cease operation.	
comDevice.configuration. Corrupted	26.7.43	200	CRC calculation finds that CRC does not match expected value in one or more places of memory.	
comDevice.power.failed	26.26.0.85	200	Power failed	
comDevice.power.test.failed	26.26.111.85	200	This is a test version of alarm #119.	
electricMeter.RCDswitch. ConnectFailed	3.31.0.67	200		

Table 5.8 Aclara RF Network I-210+c Supported Alarms

IEC 61968-9 Description	IEC 61968-9 Appendix E Code	Priority	Comment	Required Switches
electricMeter.RCDswitch. DisconnectFailed	3.31.0.84	200		
ComDevice.Power.Restored	26.26.0.216	199	Last gasp restoration	
comDevice.Power.test. restored	26.26.111. 216	199	This is a test version of alarm #120	
comDevice.metrology.IO. error	26.21.60.79	195	Communication error occurred with host meter (raised after 5 retries have failed in succession)	
electricMeter.configuration. program.lossDetected	3.7.83.47	190	Loss of program	E2
electricMeter.configuration. program.re-established	3.7.83.49	190		E2
electricMeter.configuration. program.initialized	3.7.83.33	181	Meter programmed	E2
electricMeter.configuration. program.uninitialized	3.7.83.61	181	Meter unprogrammed	E2
comDevice.temperature. threshold.maxLimitCleared	26.35.261.73	180	Temperatures have cooled so that the radio transmitter may resume operation.	
electricMeter.temperature. threshold.maxLimitCleared	3.35.261.73	180	Hot socket alarm cleared	
electricMeter.demand. overflow	3.8.0.177	176	Demand Overload	E2
electricMeter..processor. error	3.0.82.79	173	Generic host meter error	
electricMeter.memory.nvram .failed	3.18.72.85	163	NV Memory Failure (where data is stored)	
electricMeter.memory.ram. failed	3.18.85.85	161	RAM Failure	
electricMeter.memory.ram. succeeded	3.18.85.58	161		
ElectricMeter.Demand.Reset Occurred	3.8.0.215	160	It is assumed that demand reset billing determinants will be part of the daily shift list, so they don't have to appear as name-value pairs here.	E2
electricMeter.memory.rom. failed	3.18.92.85	160	ROM Failure (where firmware is stored)	
electricMeter.memory.rom. succeeded	3.18.92.58	160		
electricMeter.loadControl.Em ergencySupplyCapacityLimit. EventStarted	3.15.138.287	130	Emergency Conservation Period (ECP) has started	E2

Table 5.8 Aclara RF Network I-210+c Supported Alarms

IEC 61968-9 Description	IEC 61968-9 Appendix E Code	Priority	Comment	Required Switches
comDevice.firmware. decryption.failed	26.11.36.85	120	Firmware payload failed decryption	
comDevice.firmware. signature.failed	26.11.103.85	120	DFW signature failed digital signature verification	
electricMeter.Configuration. Calibration.activated	3.7.18.4	120	Calibration mode activated	
ElectricMeter.RCDSwitch. PrepaymentCredit.Expired	3.31.81.64	120	Open due to prepayment exhaustion	
electricMeter.security.access .uploaded	3.12.1.25	120	Meter reports it was written	
electricMeter.metrology. readings.resetOccurred	3.21.87.215	113	Energy registers in the meter have been zeroed	
comDevice.security.session. failed	26.12.129.85	112	DTLS Handshake failure	
comDevice.firmware.status. replaced	26.11.17.52	111	New DFW image has been applied and is running	
comDevice.security.session. succeeded	26.12.129.58	110	DTLS Handshake success	
electricMeter.loadControl. EmergencySupplyCapacityLim it. EventStopped	3.15.138.288	110	Emergency Conservation Period (ECP) has stopped	E2
electricMeter.metrology.Test Mode.started	3.21.19.242	110	Meter reports test mode initiated	E2
electricMeter.metrology.Test Mode.stopped	3.21.19.243	110	Meter reports test mode exited	E2
electricMeter.power.voltage. frozen	3.26.38.88	110	DC bias detected	E2
ElectricMeter.RCDSwitch. Voltage.TamperDetected	3.31.38.257	110	synchronous load side voltage present	
electricMeter.power.voltage. minLimitCleared	3.26.38.292	109		Q2
electricMeter.power.voltage. minLimitReached	3.26.38.150	109	Low voltage	Q2
electricMeter.power.voltage. released	3.26.38.51	109	DC bias condition cleared	E2
ElectricMeter.RCDSwitch. SupplyCapacityLimit. Disconnected	3.31.139.68	108	Open due to demand limiting	E2
electricMeter.power.voltage. lossDetected	3.26.38.47	107	Loss potential alarm from revenue meter, i.e., a voltage so low that metrology accuracy has been compromised.	E2, Q2
electricMeter.loadControl.Su pplyCapacityLimit. EventStarted	3.15.139.287	105	Demand Limiting Period (DLP) has started	E2

Table 5.8 Aclara RF Network I-210+c Supported Alarms

IEC 61968-9 Description	IEC 61968-9 Appendix E Code	Priority	Comment	Required Switches
electricMeter.security.tilted	3.12.0.263	105	Tilt alarm (including inversion)	E2
electricMeter.Security. magneticSwitch. tamperCleared	3.12.66.291	105	High intensity magnetic field no longer detected	
electricMeter.Security. magneticSwitch. tamperDetected	3.12.66.257	105	High intensity magnetic field detected	
ElectricMeter.Power.Current. ImbalanceCleared	3.26.6.75	102	Current imbalance cleared	
ElectricMeter.Power.Current. Imbalanced	3.26.6.98	102	Current imbalance detected	
electricMeter.power.reactive Power.normal	3.26.294.37	102		E2
electricMeter.power.reactive Power.reversed	3.26.294.219	102	Leading kVArh	E2
ElectricMeter.Billing.RTP. Activated	3.20.94.4	100		E2
ElectricMeter.Billing.RTP. Deactivated	3.20.94.19	100		E2
electricMeter.clock.error	3.36.0.79	100	Clock error	
electricMeter.loadControl. SupplyCapacityLimit. EventStopped	3.15.139.288	100	Demand Limiting Period (DLP) has stopped	
electricMeter.power.current. MaxLimitCleared	3.26.6.73	100	Excessive current (above meter class amps) has ceased	E2
electricMeter.power.current. MaxLimitReached	3.26.6.93	100	Excessive current (above meter class amps) for more than 0.5 seconds	E2
electricMeter.power.rotation .normal	3.12.93.37	100		
ElectricMeter.RCDSwitch. Voltage.Charged	3.31.38.15	100	asynchronous load side voltage present	
ElectricMeter.Security.Access .Downloaded	3.12.1.60	100	Meter reports it was read	
ElectricMeter.Power.Error	3.26.0.79	95	Service Error Detected	
ElectricMeter.Power. ErrorCleared	3.26.0.279	95	Service Error Cleared	
ElectricMeter.security. password.invalid	3.12.24.35	92		
ElectricMeter.security. password.unlocked	3.12.24.62	92		
ElectricMeter.IO.Disabled	3.0.60.66	91		
ElectricMeter.IO.Enabled	3.0.60.76	91		
electricMeter.power.rotation .reversed	3.12.93.219	90	Received kWh, reverse flow	

Table 5.8 Aclara RF Network I-210+c Supported Alarms

IEC 61968-9 Description	IEC 61968-9 Appendix E Code	Priority	Comment	Required Switches
electricMeter…error	3.0.0.79	90	System error	
ElectricMeter.Power.Status. Disconnected	3.26.17.68	89	Open due to outage management	
electricMeter.battery.charge. minLimitCleared	3.2.22.73	88		
electricMeter.battery.charge. minLimitReached	3.2.22.150	88	Low battery	
electricMeter.clock.time. changed	3.36.114.24	88	Meter reports its time has changed	
electricMeter.power.failed	3.26.0.85	88	Meter power-down	
electricMeter.power.restored	3.26.0.216	88	Meter power-up	
electricMeter.power.phaseA. sagStopped	3.26.131.224	87		E2 or V2
electricMeter.power.phaseA. swellStopped	3.26.131.249	87		E2 or V2
electricMeter.power. phaseAVoltage.sagStarted	3.26.131.223	87	Diagnostic 6 -- Under Voltage Phase A	E2 or V2
electricMeter.power. phaseAVoltage.swellStarted	3.26.131.248	87	Diagnostic 7 -- Over Voltage, Phase A	E2 or V2
electricMeter.metrology. selfRead.succeeded	3.21.231.58	85	Meter reports it performed a self read	
electricMeter…errorCleared	3.0.0.279	80		
electricMeter.demand.normal	3.8.0.37	17		

Tamper Detection

The system offers a variety of means for tamper detection. The meter itself generates the following alarms:

- The tilted alarm during which a power outage and restoration occurs, immediately followed by a significant flow of reverse energy.
- The “meter bypassed” alarm is presented as ElectricMeter. RCDSwitch. Voltage. TamperDetected in which an RCD is remotely opened, the meter bypassed, and a CLOSE command issued to the meter.
- A large magnet is placed next to the meter in an effort to affect its ability to accurately measure electricity. An electricMeter. Security. magneticSwitch. tamperDetected alarm is issued.

AclarONE adds the following reports which can also be useful in building the case against energy thieves:

- Reverse rotation
- Consecutive days of zero consumption on active meters
- Positive consumption on supposedly inactive meters

It should be noted that any one of these by itself is not sufficient evidence to convict a person of stealing energy. There are quite often very valid reasons for zero energy use and reverse rotation. It should also be understood that the meter hardware which determines if the meter has been bypassed makes this determination based on the frequency difference between the line side and the load side voltages. This is a configurable parameter in MeterMate, but typically, if the line side and load side match within +/- 1 Hz, the meter concludes that the frequencies match and the meter has been bypassed. This might not always be the case in reality. It could be that the line side and load side frequencies just happen to match. These tamper detection mechanisms can be used to bring an account to the utility's attention, but physical evidence at the service location should be sought before pursuing any conviction.

Alarm Notes

Meters can be configured to automatically perform a self read. The AMI NIC will also frequently ask the meter to perform a self-read. Since self-reads are commonplace in an AMI environment, it is recommended that MeterMate be used to disable self-read alarms.

When a demand reset occurs, the NIC will generate an alarm. If the meter also has event logging enabled, it will also attempt to capture the same event in its log. The NIC will comb through the log and send up this form of the event as well. In order to prevent duplicate logs, it is recommended that MeterMate be used to disable demand reset alarms.

When power is lost NICs will periodically generate comDevice.power.failed alarm. Upon restoration the NIC will report a comDevice.power.restored alarm along with certain device data, such as voltage and start/stop timestamps. The I-210+c without a battery will most likely have lost its date and time during this power interruption. The NIC has special hardware to maintain a real time clock even in the absence of power for at least 24 hours. The NIC will supply the correct date and time to the meter after power-up. Since time is an important aspect of metering, the meter will alarm when its date is written. It will announce that it is being reprogrammed and issue an electricMeter.configuration.program.initialized alarm when time is written. This alarm won't be seen from meters that have a battery. Finally, when the meter event log is enabled, it is possible that electricMeter.power.failed and electricMeter.power.restored alarms will be logged and then reported by the meter. These alarms are the meter's account of the power outage and may have timestamps that differ by a few seconds relative to the NIC's account of the same outage.

Meter Features Not Supported

- The Aclara RF Network implementation does not support the retrieval of seasonal data from the meter. The AMI system will report readings throughout every season to the data warehouse. If seasonal data is wanted, it should be available from the data warehouse (MDMS).
- The Rolling Billing Period (RBP) Peak1 and Peak2 (a.k.a. Cycle Insensitive demand) supported by the meter is not necessary in an AMI environment. Furthermore, the use of daily maximums within the RBP feature is not recommended. Much better support for daily demand is available with the common demand feature and by programming the meter to automatically perform a demand reset every day.
- The I-210+c LP tables can be programmed to optionally capture End Values periodically in the tables themselves. The reporting of End Values is currently not supported. Instead the sources must be reported using the Daily Shift (DS) message.
- Using voltage as a source for a demand calculation is not supported. The back office systems lack a means of expressing its unit of measure.
- The reporting of the present demand value under construction is not supported. These are primarily useful to a technician standing in front of the meter. The billing system is interested in demand values after the demand interval has closed out.
- Real Time Price (RTP) messaging is not supported. If the relay opens, it will be reported, but the ability to broadcast a real time price is not currently supported by the AMI system.
- The use of the I-210+c relay for direct load control (in which a command is issued to a population of meters to cycle the relay for a specific duty cycle) is currently not supported. However, should the RD contact open for load control reasons, an alarm will be generated.
- Prepay metering within the I-210+c meter is currently not supported. However a prepay metering function can be supported in another fashion. The preferred approach is to leverage the 15-minute interval data (reported every 15 minutes) and feed it to a utility back-office application, which performs the prepay application and allocation of funds. This results in a funds remaining message to the user and connect/disconnect commands to the meter.
- The Aclara RF Network AMI system supports 5, 15, 30, and 60 minute LP interval sizes. It does not support 1, 2, 3, 4, 6, 12, and 20 minute LP interval sizes.

- The Aclara RF Network AMI system also supports 5, 15, 30, and 60 minute averaging for voltage measurements. Other values are not supported by the AMI system even though they may be supported by the meter.
- Seasons are not supported by the Aclara RF Network I-210+c. The AMI system is expected to report readings every day. The MDMS database may be mined to obtain seasonal data.
- The Rolling Status feature of the I-210+c is not directly supported by the Aclara RF I-210+c. Instead, all supported alarms (as described in *Supported Quality Codes* on page 60) will be reported to the MDMS. AclaraONE may be used to view the history of the most recent cautions and errors which have been reported by the meter.
- *Remote Connect / Disconnect* on page 24 describes a few remote disconnect commands that are not supported over the air.
- The ability to remotely place the meter in test mode is not supported.

Configuration Management

When an I-210+c meter is built at the factory and outfitted with an Aclara RF Network endpoint, it will be configured according to the customizations identified in the customer configuration worksheet(s). All the meters will be configured the same way. If the needs change, or if a service location has requirements that do not fit the norm, it is possible to reconfigure the meter and/or endpoint to a new configuration. These reconfigurations can be sent over the air.

The configuration management process assumes there are multiple stakeholders at the utility, as represented in the following image.

Figure 5.13 Meter Reconfiguration Scenario

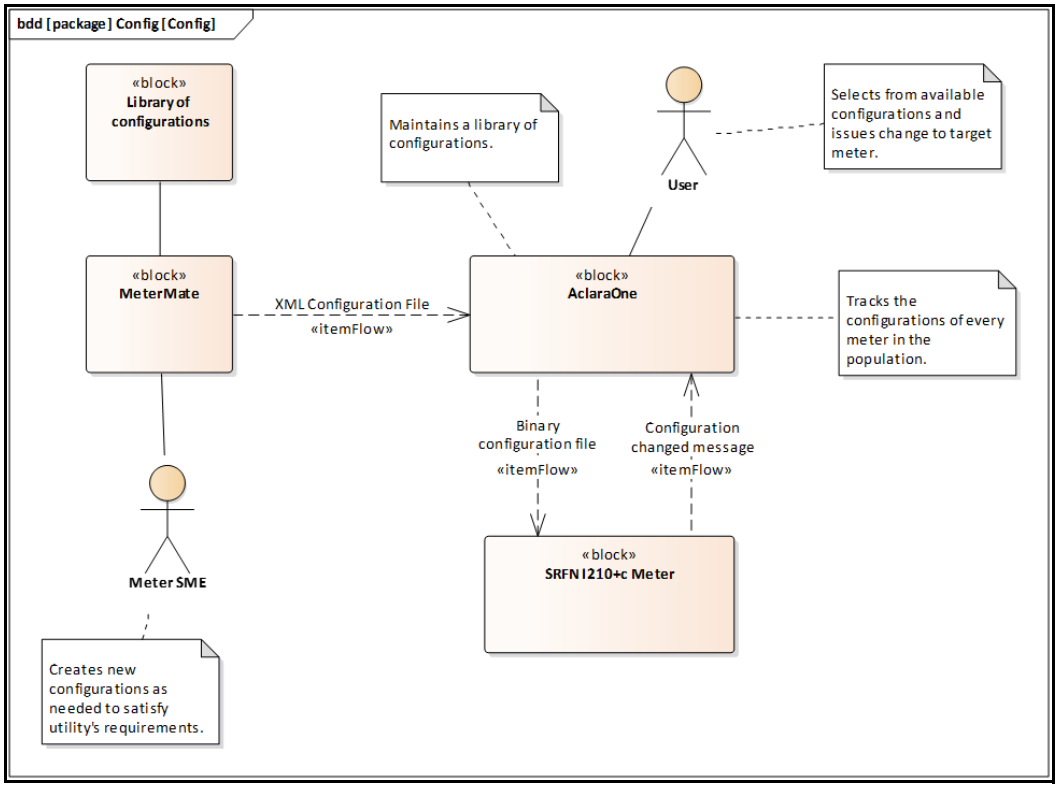

A meter subject matter expert (SME) knows how to use MeterMate to create new meter programs. A variety of meter programs might be created for the I-210+c to adapt it for use in various residential and commercial tariffs. The Engineering department may also desire certain measurements from the meter in order to qualify the soundness of the distribution system. The meter SME accepts input from numerous utility stakeholders to create a library of configurations to meet the various objectives. Ideally a small number of configurations would be able to satisfy a wide variety of tariffs.

In addition to directly interfacing with a meter via the optical port, MeterMate can produce two different types of programming files. The meter SME needs to export the new configuration file from MeterMate in an XML format with a name that everyone agrees is useful. The AclaraONE administrator can then import this XML file and generate a binary form of the file, which is transmitted over the air to the target NIC(s).

NOTES The Meter SME needs to be careful to not select a feature that the meter supports but the Aclara RF Network system does not, such as 2-minute interval sized LP data.

It is recommended that new meter programs be tested in the meter shop prior to being launched over the air to a large population of meters. Furthermore, it is advisable to try a small population of meters before attempting the entire

population of meters. This way, if a mistake in the programming is present, the problem is more easily remedied.

Nuisance alarms are disabled by (re)configuring the meter to not raise the unwanted alarm. Unprogramming the meter clears these settings. If the meter is ever unprogrammed and still connected to a configured NIC module, the meter will start to log and ultimately report table read notifications. Each meter will produce hundreds of these notifications every day that it remains powered and connected in this way. It is expected that this situation could easily occur in the meter shop. If a DCU is providing coverage to the meter shop area, these alarms may find their way to the headend before they can be cleared by the technician as the meter is returned to service.

There are features that the Aclara RF Network system supports which are not identified on the Customer Configuration Worksheet. These may be found by studying the list of supported measurements in *Supported Measurements* on page 36.

Recommended Meter Configurations

MeterMate is used to configure the meter. As an alternative to using the optical port on the meter, MeterMate can generate a configuration file which is processed and transmitted through AclaraONE over the air to the meter. Anything that can be configured with MeterMate over the optical port can also be configured over the air.

Restrictions

If the NIC is configured to send up specific measurements in a message (such as a daily shift message) and the meter is reprogrammed so that it no longer provides that measurement, it will cause the NIC to supply a known missing read in place of the required measurement in the message. The NIC should similarly be reconfigured (reprogrammed) so the message does not require the unavailable measurement.

The NIC Customer Configuration worksheet is used to establish new NIC configurations. The following messages are vulnerable to this type of failure:

- The daily shift message
- The demand reset response message
- The on-request read default

Other messages, including LP data, are not vulnerable to this type of failure caused by meter reprogramming.

Meter Modes

The I-210+c meter can operate in one of three modes. This effectively turns the I-210+c into three different meters. These modes determine what features are operational in the meter. The modes are formally known as:

- Demand only
- Demand / LP
- TOU

Users should know that the “demand only” works best for a once-a-month reading of demand in a non-AMI environment. Demand-only meters do not keep time. They are unable to provide a date/timestamp for the demand maximum. The meter hardware will provide a date/time value of 0 which represents midnight of January 1st, 1970. Demand-only meters will supply this timestamp for all meter events and voltage events. However, certain alarms originate within the NIC. The last-gasp message, the power-restored message, and the demand reset response message (indicating a demand reset event) will all have a demand reset date and time supplied by the NIC.

Customers that want a proper demand maximum date and time associated with demand values should configure their meters to operate as demand / LP or TOU meters.

Diagnostics

Cautions

A high temperature threshold of 70-75 degrees centigrade may be used. The MeterMate setting should not exceed 75 °C.

Events

The Event Log should only capture the items of interest to the utility.

The Self Read Event (21) will occur daily and should probably not be included in the list of reported items.

The Table Read Event (07) will occur every 5 minutes and will prove to be a nuisance alarm if it is enabled. This could have the effect of drowning out more important alarms that the utility cares about.

If Demand Reset is enabled as a logged event, the headend will receive alarms twice - one by the NIC when it performs the action, and one by the meter’s event log. If Demand Reset is not logged by the meter, the user must rely on demand data (reported daily) to determine if a demand reset has occurred (perhaps locally by a HandHeld MeterMate). The present max, previous max, and demand reset counts can all be monitored for the changes that result from the demand reset action.

If RCDC Switch Open and RCDC Switch Close are enabled, the headend will receive alarms twice - one reported by the NIC when it performs the action, and another by the meter in its event log. If a technician uses a HandHeld MeterMate to locally open or close the switch, and logging is disabled, the user at the headend (and MDMS and CIS) will discover the change by monitoring the value of the RCD switch position, which is reported daily by the NIC.

Display

When setting up items to display on the meter's LCD, be careful to note the Display Label you assign to the measurement. This will help set the context to the user.

Under the Normal Mode tab, the following should be included on the alternate display scroll list:

- Diagnostic Tools
  - Network Status Info 1 (Network status information)
- Remote Disconnect
  - Switch Status
- Diagnostic Tools
  - Network Status Info 2 (Self-test results to the user)
  - Network Status Info 3 (NIC operating mode information)

Recommended Endpoint NIC Configurations

The Customer Configuration Worksheet will allow certain network behaviors to be configured.

The bulk of the data transmitted through the network is the LP data from the meter. The I-210+c collects all channels at the same rate. However, they can be transmitted to the headend at a different rate than they are collected. If fresh data is required, intervals can be reported as soon as they are available by setting the LP Bubbleup Schedule parameter to the same size as the interval. If network efficiency is more desirable, you can set the LP Bubbleup Schedule parameter to be a larger size than the LP interval size, e.g., hourly reporting of 15-minute interval data. However queueing up too much data can be problematic too. No more than 4 intervals should be queued up in the message. On the other hand, going too small can create problems as well. The lpBubbleupSchedule parameter in the NIC should not be set to a smaller size than then LP interval size in the meter. The NIC can transmit 15-minute LP data every 15 minutes, but it should not be configured to send 15-minute LP data every 5 minutes.

If the meter is configured to not collect LP data (either configured with zero channels of LP data, or configured without the R2 softswitch) then LP Bubbleup Schedule should also be configured to zero. Opportunistic alarms commonly ride in on bubble up messages. With LP data disabled, this leaves daily shift data (and

engineering stats) as the means to move these messages. If these other messages are disabled for some reason, the user must also change the configuration of the opportunistic alarm threshold to turn all alarms into real time alarms, or opportunistic alarms will never be sent to the headend. (See *Aclara RF Network I-210+c Supported Alarms* on page 62 for default alarm priorities.)

The demandResetLockoutPeriod should be set to 24 hours, and MeterMate should have a demand reset lockout period of 4:15.

Opt-Out

Sometimes customers express concerns over RF energy. While entire banks of meters are deemed safe according to US and Canadian standards, some customers may still wish to opt out of the smart meter program.

- The most effective means of eliminating RF transmissions from the service location is to use a meter that lacks an RF NIC. A meter can be installed that has to be read physically once a month instead.
- If it is not necessary to completely eliminate RF transmissions, it is possible to configure an RF equipped meter to transmit only last-gasp and power-restored messages.
- If a bit more RF can be tolerated, the module can be configured to transmit only the daily shifted data.
- Finally, if only minor reductions are needed, a small decrease in RF traffic can be attained by configuring the endpoint for batch interval readings and transmitting them infrequently.

Meter Passwords

The meter contains multiple boards. Every meter contains a meter module assembly (MMA). This board contains the meter microprocessor and optical port interface. Purchasing the Aclara RF Network causes an Aclara RF Network NIC to also be added to the assembly. Both boards are provided with passwords when the meter is built at the factory. This allows the NIC to talk to the meter module.

If someone with a MeterMate handheld were to walk up to a meter installed in the field and connect it to the meter's optical port, it would be possible for such a person to interact with the meter. They could change the password in the meter module assembly. However, this action does not cause the NIC's password to be updated. It will cause the NIC to supply an obsolete password to the meter, and to have its requests for data rejected. The NIC will start to report comDevice metrology I/O error alarms to the headend. These will occur periodically until the issue is fixed.

To change the password in the NIC the user at the headend must use the Engineering Tool. Please contact Aclara Support for assistance in this matter.

Meter Firmware

Meters have two types of firmware: a base code, which fully operates the meter, and patches, which safely modify certain portions of the code. The I-210+c Gen 5 meter is able to accept patch updates but not base code updates. The Aclara RF Network is able to deliver patch updates over the air to the meter.

The initial meter that supports this feature has base code version 6.0.7. This can support any patch in the family. A document from Aclara Meters, 103X584 Firmware Patches for I-210+c Meters describes all of the available patches. Base code versions and patch code version numbers combine to form an overall version number for the firmware. The first two fields from the base code version join with the first two fields from the patchcode version to make a firmware version. For example, base code version 6.0.7 joins with patch code version 4.1.0 to make firmware version 6.0.4.1.

When Aclara Meters publishes a new firmware update for the meter that seems to be interesting, it should be tested out in the meter shop by programing the meter with MeterMate.

If the update proves worthwile, an equivalent file may be obtained for use with AclaraONE, which delivers the same patch. This file is digitally signed. When it is transferred to the directory at AclaraONE, the user may select it, and AclaraONE will identify suitable meters in the network and assist in the update process.

Softswitch Management

Over-the-air softswitch management is currently not supported.

CHAPTER

6

INSIDE THE METER

Equipment Layouts

The following image shows (in the background) a 12-pin connector between the NIC (lower board) and the metrology board. The photo also shows the NIC connected to the white antenna via a miniature coaxial cable.

Figure 6.1 Meter and NIC

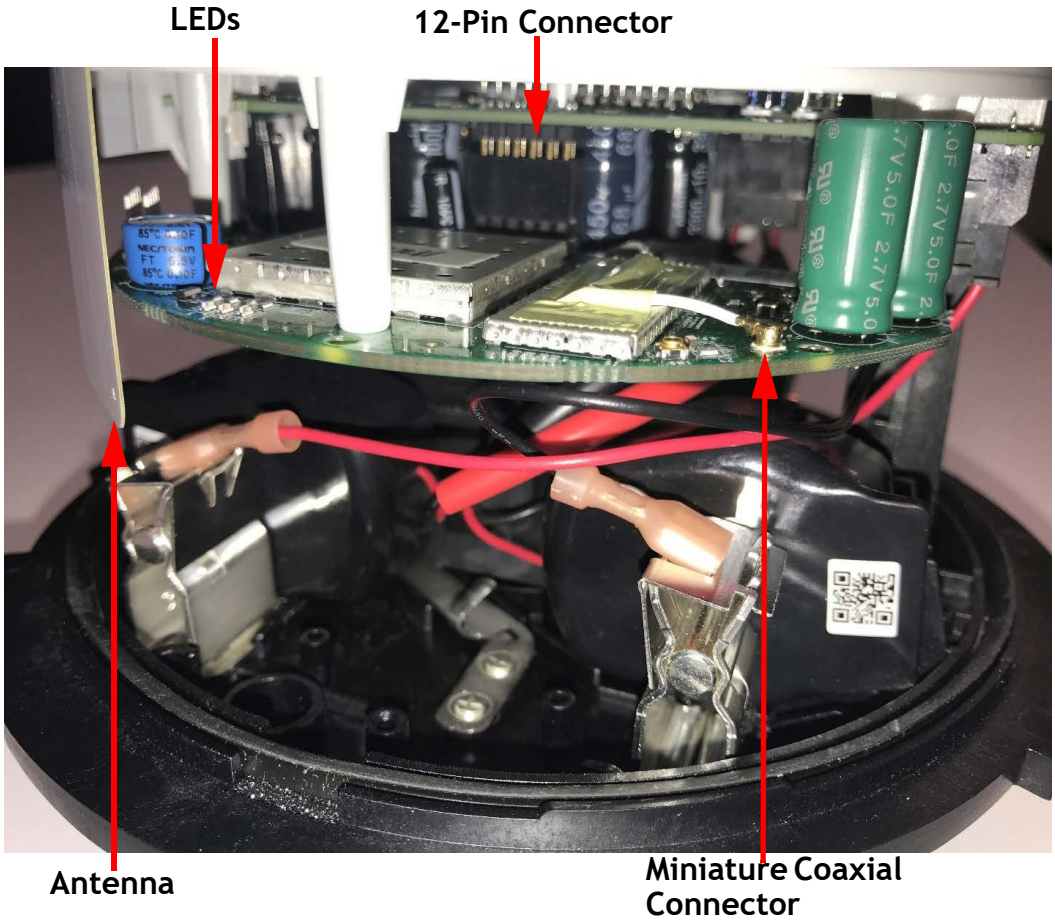

Also note the three surface mount LEDs at the bottom. The antenna connects with a UF.L miniature coaxial connector. The miniature coax is taped down and routed over a metal shield. It leads to the antenna mounted on the left side of the assembly. The antenna is also pictured in the following image.

Figure 6.2 Meter and Aclara RF Network Antenna

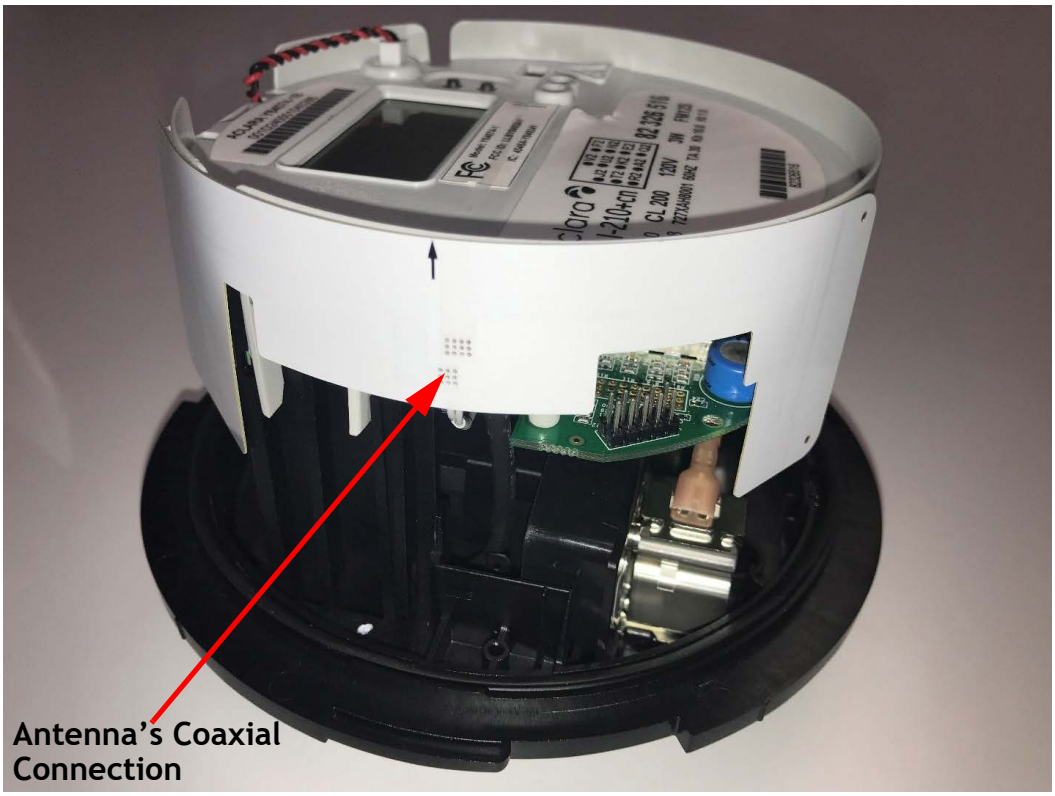

The Aclara RF Network antenna is pictured in Figure 6.2. It mounts on the left side of the meter assembly. The antenna looks like a thin piece of white plastic. It is a flexible printed circuit board laminated on FR4 material. The antenna's coaxial connection is permanent and occurs at the middle of the board. The miniature coax is routed through the middle of the meter -- just above the NIC board.

LEDs

The Y84074-1 NIC has three LEDs for communicating status to the user. The Y84090-1 NIC does not have these LEDs. It relies instead on messages to the meter LCD to communicate information to the user.

The three surface-mount LEDs pictured in Figure 6.1 are blue, red, and green (respectively) when lit. They should be visible through the bottom side of the fully assembled meter.

At power-up you may see the blue LED blink, illuminate steady on, then extinguish. The blinking blue LED indicates that the NIC needs time from the network. A steady-on LED indicates that it has obtained time. If the blue LED

illuminates without blinking it indicates that it has retained the correct time despite being powered down, and it doesn't need to obtain time from the network. The blue LED will extinguish 5 minutes after power-up.

The red LED indicates self-test outcomes. A rapidly blinking red LED indicates the self-test is running. A slow-blinking red LED indicates that the test has completed and the processor is running. The LED will extinguish after 30 seconds if no problems were found. A steady-on LED indicates that the self-test has found a problem with the hardware on the board. Such a board should be returned to Aclara for replacement or repair.

The board also contains a green LED. It is only used during manufacturing. It is used to show that the board is in a special mode and that the radio has been temporarily disabled.

CHAPTER

7

INSPECTING THE SITE FOR ANOMALIES

Observe All Safety Precautions

CAUTION Observe all appropriate safety precautions when visiting a service location and replacing a meter.

Antenna Clearance

NOTICE New construction (including fences) may cause metal objects to be installed near the antenna. This will affect the product's communication performance. The antenna must be mounted clear of metal objects for a distance of two feet. Any metal in the radiation area will result in a corresponding RF shadow on the map.

The headend may be used to test the communication path to NICs that may be affected by obstructions.

CHAPTER

8

INSTALLING THE METER

Meter Installation Procedure

Installing the meter is nothing more than a meter change out. Follow your company's guidelines for meter change outs.

1. Wear appropriate PPE, such as gloves.
2. Bring suitable test equipment, such as a VOM.
3. Follow all applicable safety guidelines.
4. Notify the home/business owner prior to interrupting power.
5. Document the old meter's serial number and final dial reading(s) prior to removal.
6. Remove the old meter.
7. Measure the various service voltages to ensure they are within specification.
8. Inspect the socket for serviceability. Make plans to replace it if one or more jaws show signs of age or corrosion.
9. If the socket is in good condition, install the new meter.
10. Upon power-up you may notice a blue blinking LED that transitions to remaining steadily on. The steady LED light indicates the NIC has communicated with a nearby DCU. A meter that has a red LED that remains steadily on should not be installed. Swap out such a meter and return it to Aclara for evaluation. Use a different meter instead.

    Alternatively, some designs use the meter LCD instead of the LEDs. If the meter is programmed to scroll a "NET---" message will appear after power-up. This indicates that the NIC needs to communicate with a nearby DCU. Upon hearing from a DCU, the message will be promoted to "NETREC" to indicate that it has received a message from the network.
11. Note any special conditions, such as if the meter appeared to fail to communicate with the network, and if the meter is inside a building or surrounded by nearby tall metal fencing.
12. The NIC will likely spend the next hour or two registering itself on the network and obtaining security credentials so that it may operate normally.
13. The headend is expected to reconfigure the module if it finds it to have a configuration inappropriate for the account.

CHAPTER

9

TESTING NIC COMMUNICATIONS IN THE FIELD

Network Status

The NIC will write messages to the meter LCD which indicate the network status. A message of “NET---” will be written at power-up and remain until some communication with a DCU occurs, as indicated in the following image.

Figure 9.1 Indication of No Communication

If the NIC is able to hear time sync broadcasts from the DCU, it will promote the message to “NETREC”, as indicated in the following image.

Figure 9.2 Indication of Communication received from a DCU

Five minutes after power-up the screen will change to all blanks.

Self-Test Status

The NIC will write messages to the meter LCD, which indicate the NIC self-test status. These messages are intended to appear on the ALT scroll list. One may place the meter in the ALT scroll mode by placing a magnet over the logo on the top right face of the meter.

When all is well, the user should see ST0000 on the display, as shown in the following image.

Figure 9.3 Indication of Successful Self-Test

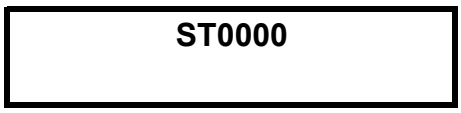

However, a nonzero number indicates a self-test failure.

Table 9.1 Self-Test Error Codes

Code	Meaning
0000	No failures
0001	External NV memory failure
0002	RTC failure
0003	Codes 1 and 2 are both present
0004	Security device not functioning
0005	Codes 1 and 4 are both present
0006	Codes 2 and 4 are both present
0007	Codes 1,2, and 4 are present
0008	Security device not fully operational
0009	Codes 1 and 8 are present
000A	Codes 2 and 8 are present
000B	Codes 1, 2, and 8 are present
000C	Codes 4 and 8 are present
000D	Codes 1, 4, and 8 are present
000E	Codes 2, 4, and 8 are present
000F	Codes 1, 2, 4, and 8 are present
0020	Initialization Failure
0021	Codes 1 and 20 are present
0022	Codes 2 and 20 are present
0023	Codes 1, 2, and 20 are present
0024	Codes 4 and 20 are present
0025	Codes 1, 4, and 20 are present
0026	Codes 2, 4, and 20 are present
0027	Codes 1, 2, 4, 20 are present
0028	Codes 8 and 20 are present
0029	Codes 1, 8, and 20 are present
002A	Codes 2, 8, and 20 are present
002B	Codes 1, 2, 8, and 20 are present
002C	Codes 4, 8, and 20 are present
002D	Codes 1, 4, 8, and 20 are present
002E	Codes 2, 4, 8, and 20 are present
002F	Codes 1, 2, 4, 8, and 20 are present

Operating Mode

The NIC will write messages to the meter LCD, which indicate the NIC operating mode. These messages are intended to appear on the ALT scroll list.

Table 9.2 NIC Operating Modes

Message	LCD Text	Meaning
Hot	HOT	The NIC has suspended any RF transmission because it sensed a high operating temperature. It can still receive messages, just not transmit them. The NIC will revert to another mode when it cools down.
Quiet	QUIET	The NIC has been placed in a radio-silent mode for the purposes of meter calibration.
Ship	SHIP	The NIC has been placed in a “ship mode” which will cause it to suppress last gasp and restoration messages, as well as register in the network after a power down / power up cycle.
Shop	SHOP	The NIC has been placed in a “meter shop mode” which will cause it clear certain histories, suppress last gasp messages, and register in the network after is power cycled.
Secure	SECURE	The NIC is operating normally and has security enabled.
Run	RUN	The NIC is operating normally and has security disabled.

Trace Route

With the new meter installed in the system, the ability of the system to interact with the NIC can be tested with the trace route command.

Testing Communication with a Meter in the Field

Use the headend software to select the NIC target and allow it to return a response along multiple DCU pathways. The system will report the message latencies along each path along with the signal strengths. Compare these signal strengths to the performance specifications in *Product Specifications* on page 11 and to the DCU receiver performance specifications. The strongest return pathway should be well above the DCU’s sensitivity limits described in the *DCU Maintenance and Operation Technical Manual*. Other pathways may be near the sensitivity limits. DCUs which do not appear in the report were too far away to hear the NIC’s response.

Site Testing

Tools Required:

- A portable spectrum analyzer with real-time signal capture

Procedure:

1. Tune the spectrum analyzer to filter all unlicensed channels in the 450-470 MHz spectrum.
2. Use the trace route command to ping the meter as described above.
3. Observe the blip that represents a power transmission from the DCU on the DCU Tx channel, and the blip that represents the response on one of the Rx channels.
4. Use the signal analyzer to record the signal strengths and your location.
5. Take measurements for this meter at other locations as desired.
6. If a communication problem is believed to exist at the location, some consultation with Aclara personnel may be necessary to identify a suitable course of action.

Testing Communication with a Meter in the Meter Shop

The Service And Diagnostic test Tool may be used to test a particular NIC with a particular DCU. This is particularly useful where the meter has been pulled from the field, and a dedicated DCU has been installed in the meter shop area. A utility may also wish to experiment with the product before deploying it in the field.

When experimenting with the TraceRoute feature in the meter shop, the response RSSI level reported by the DCU should fall within a normal range (as determined by experience) to indicate that the NIC antenna is properly connected inside the meter assembly.

Whenever a meter is powered up, powered down, and experimented with in the meter shop, the Service and Diagnostic Tool should be used to decommission the unit prior to deployment in the field. Failure to decommission the unit could cause alarms generated in the meter shop to be reported after the unit is placed in the field. It can also cause the subsequent installation of the meter to be reported by the hardware as an extended power failure and restoration event to the headend.

Interferer Test

The health of the network can be observed indirectly using commercial off-the-shelf test equipment.

Tools Required:

- A portable spectrum analyzer with real-time signal capture.

Procedure:

1. Tune the spectrum analyzer to filter all unlicensed channels in the 450-470 MHz spectrum,

   Or, place the spectrum analyzer in the waterfall mode and allow it to record across the licensed frequencies.
2. Aclara RF Network I-210+c units typically report interval data every 15 minutes. Inbound traffic should be detected on one of the inbound channels during this period.
3. Use the signal analyzer to record the signal strengths and your location.

   If a strong transmission occurs which is not on a licensed channel, but which bleeds over into the licensed area, this is evidence of a problem.
4. Take measurements for this meter at other locations as desired.
5. If a communication problem is believed to exist at the location, some consultation with Aclara personnel may be necessary to identify a suitable course of action.

   Interference in a licensed band from a 3rd party may also require FCC involvement (depending on the determination of the source of the problem.)

CHAPTER

10

UPDATES AND REPAIRS

The NIC firmware may be updated over-the-air from the headend. The NIC may be installed in a meter in the field or in the meter shop.

The meter firmware may be patched over-the-air from the headend. The meter may be in the field. If it is in the meter shop, it is preferable to use MeterMate to perform the firmware update.

Replacing a NIC

There are no user-serviceable parts inside of the meter, but it is possible to swap out NIC boards and exchange them between meters.

To replace a NIC board:

1. Connect an ESD grounding strap and observe ESD precautions when handling boards.
2. Remove the meter from its socket
3. Grab and rotate the front cover ¼ turn counter-clockwise until it releases (as described in the Meter User Guide).
4. Pinch the dual gray meter latches on the left side and right sides of the meter to release the meter module from the meter base.
5. Disconnect the NIC and remove it from the assembly.
6. Disconnect the antenna UFM connection from the board.
7. Attach the antenna wire to the new NIC.
8. Insert the new NIC in place of the old one.
9. Reattach the meter module to the meter base by pressing the module against the base until the dual latches spring open and catch on the black tabs. Ensure both the left and right sides are seated.
10. Replace the meter front cover.
11. Re-insert into test socket to power device.
12. At power-up you may see red and/or blue LEDs temporarily light then extinguish. The LEDs are described in *LEDs* on page 78.
13. Use the headend Service And Diagnostic Tool and a nearby DCU to reconfigure the NIC and ensure that it is functioning properly.

Index

A
Aclara University 3
Alarm Notes 67
Antenna Clearance 81
Applicable Industry Standards 1
Audience 1

C
Cautions 72
Compliance Declarations 13
Configuration Management 69

D
Daily Shifted and Interval Messages 18
Demand Reset 19
Diagnostics 72
Display 73

E
End Device Events 20
Equipment Layouts 77
ESD Caution 5
Events 72

F
FCC Part 15 Compliance 13
FCC Part 90 Certification 13
FCC/IC RF Exposure Guide 8
Features 17
Field Calibration Procedure 8

I
Inside the Meter 77
Inspect Antenna Clearance 6
Inspecting the Site for Anomalies 81
Installation on Buildings 9
Installing the Meter 83
Interferer Test 89
Introduction 1
ISED Certification 14

L
LEDs 78
Licensing 9
Listing 14
LP Data 36

M
Meter Accommodations 14
Meter Components 3
Meter Features Not Supported 68
Meter Firmware 75
Meter Installation Procedure 83
Meter Modes 72
Meter Passwords 74
Meter Softswitches 34

N
Network Status 85
New Meter 21
NIC Modes 34

O
Observe All Safety Precautions 81
On Request Reading 22
Operating Mode 87
Optional Tools 2
Opt-Out 74
Other Messages 27

P
Phase Detection 27
Pole Mount Installations 10
Power Outage and Restoration 23
Product Specifications 11
Purpose 1

R
Recommended Endpoint NIC Configurations 73
Recommended Meter Configurations 71
Regulatory Guidelines 7
Remote Connect / Disconnect 24
Replacement Parts 6
Replacing a NIC 91
RF Exposure 14
RF Exposure Hazard 5
RSS-GEN Compliance 13

S
Safety Guidelines 5
Scope 1
Self Test Status 85
SHOCK HAZARD WARNING 5
Shock Hazard Warning 5
Site Testing 88
Softswitch Management 75
Supported Alarms 62
Supported Messages 17
Supported Meter Forms 14
Supported Modes of Operation 34

System Overview 2

T

Tamper Detection 66
Technical Support 3
Testing Communication with a Meter in the Field 87
Testing Communication with a Meter in the Meter Shop 88
Testing NIC Communications in the Field 85
Tools Required 2
Trace Route 26, 87
Traffic Classification 27

U

Updates and Repairs 91