RADIO TEST REPORT
FCC ID: LNQRTL8812AUCG

Product:	ScreenBeam Smart Miracast module
Trade Name:	Actiontec
Model No.:	RTL8812AU-CG
Serial Model:	N/A
Report No.:	NTEK- 2016NT05246020F3
Issue Date:	06 Jun. 2016

Prepared for

ACTIONTEC ELECTRONICS INC
760 NORTH MARY AVE., SUNNYVALE, CALIFORNIA94086,
UNITED STATES

Prepared by

NTEK TESTING TECHNOLOGY CO., LTD.
1/F, Building E, Fenda Science Park, Sanwei Community,
Xixiang Street Bao'an District, Shenzhen, P.R. China
Tel.: +86-0755-61156588
Fax.: +86-0755-61156599
Website: www.ntek.org.cn

TABLE OF CONTENTS

1 TEST RESULT CERTIFICATION 3

2 SUMMARY OF TEST RESULTS 4

3 FACILITIES AND ACCREDITATIONS 5

3.1 FACILITIES 5
3.2 LABORATORY ACCREDITATIONS AND LISTINGS 5
3.3 MEASUREMENT UNCERTAINTY 5

4 GENERAL DESCRIPTION OF EUT 6

5 DESCRIPTION OF TEST MODES 9

6 SETUP OF EQUIPMENT UNDER TEST 10

6.1 BLOCK DIAGRAM CONFIGURATION OF TEST SYSTEM 10
6.2 SUPPORT EQUIPMENT 11
6.3 EQUIPMENTS LIST FOR ALL TEST ITEMS 12

7 TEST REQUIREMENTS 13

7.1 CONDUCTED EMISSIONS TEST 13
7.2 RADIATED SPURIOUS EMISSION 18
7.3 6DB BANDWIDTH 26
7.4 DUTY CYCLE 29
7.5 PEAK OUTPUT POWER 31
7.6 POWER SPECTRAL DENSITY 34
7.7 CONDUCTED BAND EDGE MEASUREMENT 38
7.8 ANTENNA APPLICATION 40

1 TEST RESULT CERTIFICATION

Applicant's name.....:	Actiontec Electronics Inc
Address .....:	760 North Mary Ave., Sunnyvale, California94086, United States
Manufacture's Name .....:	Actiontec Electronics Inc
Address .....:	760 North Mary Ave., Sunnyvale, California94086, United States
Product description	
Product name.....:	ScreenBeam Smart Miracast module
Model and/or type reference .....:	RTL8812AU-CG
Serial Model .....:	N/A

Measurement Procedure Used:

APPLICABLE STANDARDS	
APPLICABLE STANDARD/ TEST PROCEDURE	TEST RESULT
FCC 47 CFR Part 2, Subpart J:2015 FCC 47 CFR Part 15, Subpart C:2015 KDB 174176 D01 Line Conducted FAQ v01r01 ANSI C63.10-2013 FCC KDB 558074 D01 DTS Meas Guidance v03r04	Complied

This device described above has been tested by NTEK Testing Technology Co., Ltd., and the test results show that the equipment under test (EUT) is in compliance with the FCC requirements. And it is applicable only to the tested sample identified in the report.
This report shall not be reproduced except in full, without the written approval of NTEK Testing Technology Co., Ltd., this document may be altered or revised by NTEK Testing Technology Co., Ltd., personnel only, and shall be noted in the revision of the document.
The test results of this report relate only to the tested sample identified in this report.

Date of Test : 24 May. 2016 ~ 08 Jun. 2016

Testing Engineer : Eileen Liu.
(Eileen Liu)

Technical Manager : Jason chen
(Jason Chen)

Authorized Signatory : Sam . Chen
(Sam Chen)

2 SUMMARY OF TEST RESULTS

FCC Part15 (15.247), Subpart C			
Standard Section	**Test Item**	**Verdict**	**Remark**
15.207	Conducted Emission	PASS	
15.247 (a)(2)	6dB Bandwidth	PASS	
15.247 (b)	Peak Output Power	PASS	
15.247 (c)	Radiated Spurious Emission	PASS	
15.247 (d)	Power Spectral Density	PASS	
15.205	Band Edge Emission	PASS	
15.203	Antenna Requirement	PASS	

Remark:
1. "N/A" denotes test is not applicable in this Test Report.
2. All test items were verified and recorded according to the standards and without any deviation during the test.
3. This EUT has also been tested and complied with the requirements of FCC Part 15, Subpart B, recorded in a separate test report.

3 FACILITIES AND ACCREDITATIONS

3.1 FACILITIES

All measurement facilities used to collect the measurement data are located at
1/F, Building E, Fenda Science Park, Sanwei Community, Xixiang Street, Bao'an District, Shenzhen P.R. China.
The sites are constructed in conformance with the requirements of ANSI C63.7, ANSI C63.10 and CISPR Publication 22.

3.2 LABORATORY ACCREDITATIONS AND LISTINGS

Site Description

EMC Lab.	:	Accredited by CNAS, 2014.09.04 The certificate is valid until 2017.09.03 The Laboratory has been assessed and proved to be in compliance with CNAS-CL01:2006 (identical to ISO/IEC 17025:2005) The Certificate Registration Number is L5516. Accredited by Industry Canada, August 29, 2012 The Certificate Registration Number is 9270A-1. Accredited by FCC, September 6, 2013 The Certificate Registration Number is 238937.
Name of Firm	:	NTEK Testing Technology Co., Ltd
Site Location	:	1/F, Building E, Fenda Science Park, Sanwei Community, Xixiang Street, Bao'an District, Shenzhen P.R. China.

3.3 MEASUREMENT UNCERTAINTY

The reported uncertainty of measurement y±U, where expended uncertainty U is based on a standard uncertainty multiplied by a coverage factor of k=2, providing a level of confidence of approximately 95 %.

No.	Item	Uncertainty
1	Conducted Emission Test	±1.38dB
2	RF power, conducted	±0.16dB
3	Spurious emissions, conducted	±0.21dB
4	All emissions, radiated(<1G)	±4.68dB
5	All emissions, radiated(>1G)	±4.89dB
6	Temperature	±0.5°C
7	Humidity	±2%

4 GENERAL DESCRIPTION OF EUT

Product Feature and Specification	
Equipment	ScreenBeam Smart Miracast module
Trade Name	Actiontec
FCC ID	LNQRTL8812AUCG
Model No.	RTL8812AU-CG
Serial Model	N/A
Model Difference	N/A
Operating Frequency	2402MHz~2480MHz
Modulation	GFSK
Number of Channels	40 Channels
Antenna Type	PIFA Antenna
Antenna Gain	Tx1 Antenna Antenna | Antenna Type | Antenna Gain(dBi) A(main) | PIFA | 3.53
Power supply	☐DC supply:
	☒Adapter supply: Mode: WA-10P05R Input: 100-240V~, 50/60Hz, 0.3A MAX Output: 5.0V⎓, 2.0A
HW Version	N/A
SW Version	N/A

Note: Based on the application, features, or specification exhibited in User's Manual, the EUT is considered as an ITE/Computing Device. More details of EUT technical specification, please refer to the User's Manual.

Chain 1 (Connect to Ant B for WLAN 2.4G / 5G/BT) Chain 2 (Connect to Ant A for WLAN 2.4G / 5G)

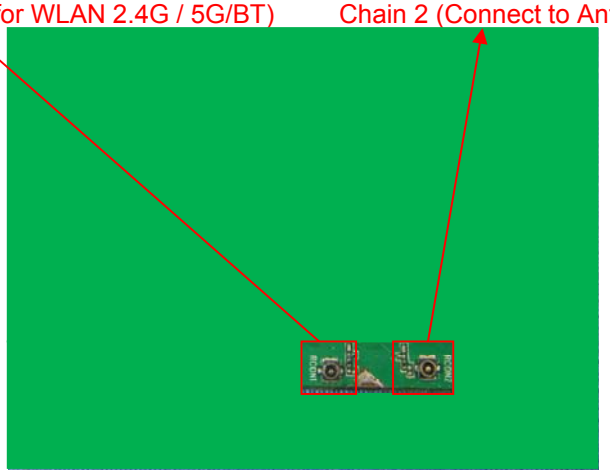

Revision History

Report No.	Version	Description	Issued Date
NTEK-2016NT05246020F3	Rev.01	Initial issue of report	Jun 06, 2016

5 DESCRIPTION OF TEST MODES

To investigate the maximum EMI emission characteristics generates from EUT, the test system was pre-scanning tested base on the consideration of following EUT operation mode or test configuration mode which possible have effect on EMI emission level. Each of these EUT operation mode(s) or test configuration mode(s) mentioned above was evaluated respectively.

The Transmitter was operated in the normal operating mode. The TX frequency was fixed which was for the purpose of the measurements.

Test of channel included the lowest and middle and highest frequency to perform the test, then record on this report.

Those data rates (1Mbps for GFSK modulation) were used for all test.

The EUT was pretested with 3 orientations placed on the table for the radiated emission measurement –X, Y, and Z-plane. The Y-plane results were found as the worst case and were shown in this report.

Carrier Frequency and Channel list:

Channel	Frequency(MHz)
0	2402
1	2404
…	…
19	2440
20	2442
…	…
38	2478
39	2480

Note: fc=2402MHz+k×2MHz k=0 to 39

The following summary table is showing all test modes to demonstrate in compliance with the standard.

Test Cases	
Test Item	Data Rate/ Modulation
	Bluetooth 4.0_LE / GFSK
AC Conducted Emission	Mode 4: normal link mode
Radiated Test Cases	Mode 1: Bluetooth Tx Ch00_2402MHz_1Mbps
	Mode 2: Bluetooth Tx Ch19_2440MHz_1Mbps
	Mode 3: Bluetooth Tx Ch39_2480MHz_1Mbps
Conducted Test Cases	Mode 1: Bluetooth Tx Ch00_2402MHz_1Mbps
	Mode 2: Bluetooth Tx Ch19_2440MHz_1Mbps
	Mode 3: Bluetooth Tx Ch39_2480MHz_1Mbps

Note:
1. The engineering test program was provided and the EUT was programmed to be in continuously transmitting mode.
2. AC power line Conducted Emission was tested under maximum output power.
3. For radiated test cases, the worst mode data rate 1Mbps was reported only, because this data rate has the highest RF output power at preliminary tests, and no other significantly frequencies found in conducted spurious emission.

6 SETUP OF EQUIPMENT UNDER TEST

6.1 BLOCK DIAGRAM CONFIGURATION OF TEST SYSTEM

For AC Conducted Emission Mode

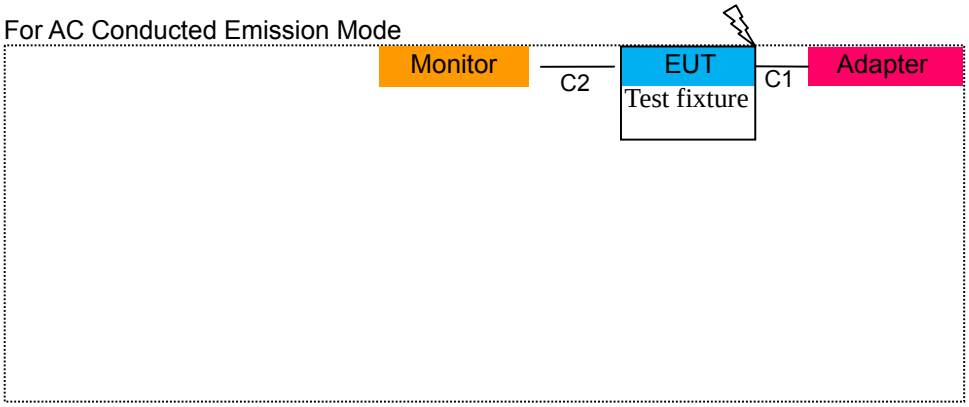

For Radiated Test Cases

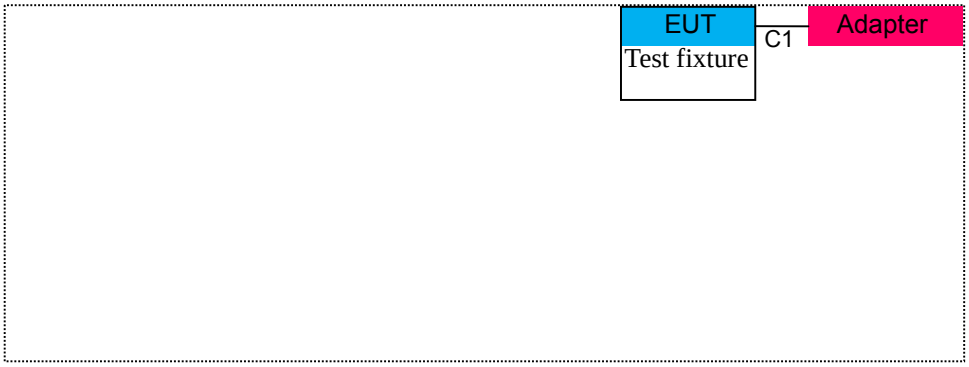

For Conducted Test Cases

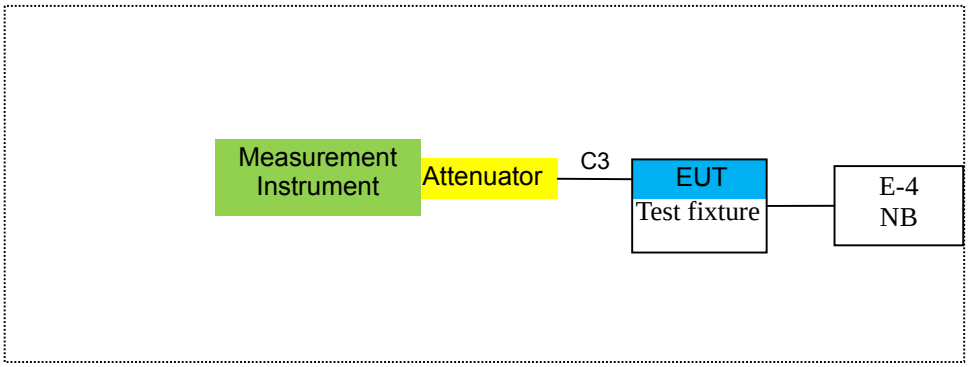

6.2 SUPPORT EQUIPMENT

The EUT has been tested as an independent unit together with other necessary accessories or support units. The following support units or accessories were used to form a representative test configuration during the tests.

Item	Equipment	Mfr/Brand	Model/Type No.	FCC ID	Note
E-1	ScreenBeam Smart Miracast module	Actiontec	RTL8812AU-CG	LNQRTL8812AUCG	EUT
E-2	Adapter	N/A	WA-10P05R	N/A	Peripherals
E-3	Monitor	SONY	KDL-24EX520	N/A	Peripherals
E-4	Notebook PC	LENOVO	E450	N/A	
	Test fixture	Actionect	SBWD70-C-2T	N/A	Test fixture

Item	Cable Type	Shielded Type	Ferrite Core	Length
C-1	USB Cable	NO	NO	1.0m
C-2	USB Cable	YES	YES	1.0m
C-3	RF Cable	NO	NO	0.5m

Notes:

(1) The support equipment was authorized by Declaration of Confirmation.
(2) For detachable type I/O cable should be specified the length in cm in『Length』column.
(3) “YES” is means “shielded” “with core”; “NO” is means “unshielded” “without core”.

6.3 EQUIPMENTS LIST FOR ALL TEST ITEMS

Radiation Test equipment

Item	Kind of Equipment	Manufacturer	Type No.	Serial No.	Last calibration	Calibrated until	Calibration period
1	Spectrum Analyzer	Agilent	E4407B	MY45108040	2015.07.06	2016.07.05	1 year
2	Test Receiver	R&S	ESPI	101318	2016.06.07	2017.06.06	1 year
3	Bilog Antenna	TESEQ	CBL6111D	31216	2015.07.06	2016.07.05	1 year
4	50Ω Coaxial Switch	Anritsu	MP59B	6200264416	2016.06.07	2017.06.06	1 year
5	Spectrum Analyzer	ADVANTEST	R3132	150900201	2016.06.07	2017.06.06	1 year
6	Horn Antenna	EM	EM-AH-10180	2011071402	2015.07.06	2016.07.05	1 year
7	Horn Ant	Schwarzbeck	BBHA 9170	9170-181	2015.07.06	2016.07.05	1 year
8	Amplifier	EM	EM-30180	060538	2015.12.22	2016.12.21	1 year
9	Loop Antenna	ARA	PLA-1030/B	1029	2015.06.08	2016.06.07	1 year
10	Power Meter	R&S	NRVS	100696	2015.07.06	2016.07.05	1 year
11	Power Sensor	R&S	URV5-Z4	0395.1619.05	2015.07.06	2016.07.05	1 year
12	Test Cable	N/A	R-01	N/A	2015.07.06	2016.07.05	1 year
13	Test Cable	N/A	R-02	N/A	2015.07.06	2016.07.05	1 year

Conduction Test equipment

Item	Kind of Equipment	Manufacturer	Type No.	Serial No.	Last calibration	Calibrated until	Calibration period
1	Test Receiver	R&S	ESCI	101160	2016.06.06	2017.06.05	1 year
2	LISN	R&S	ENV216	101313	2015.08.24	2016.08.23	1 year
3	LISN	EMCO	3816/2	00042990	2015.08.24	2016.08.23	1 year
4	50Ω Coaxial Switch	Anritsu	MP59B	6200264417	2015.06.07	2016.06.06	1 year
5	Passive Voltage Probe	R&S	ESH2-Z3	100196	2015.06.07	2016.06.06	1 year
6	Absorbing clamp	R&S	MOS-21	100423	2015.06.08	2016.06.07	1 year
7	Test Cable	N/A	C01	N/A	2015.06.08	2016.06.07	1 year
8	Test Cable	N/A	C02	N/A	2015.06.08	2016.06.07	1 year
9	Test Cable	N/A	C03	N/A	2015.06.08	2016.06.07	1 year

1	Attenuation	MCE	24-10-34	BN9258	2015.06.08	2016.06.07	1 year

Note: Each piece of equipment is scheduled for calibration once a year.

7 TEST REQUIREMENTS

7.1 CONDUCTED EMISSIONS TEST

7.1.1 Applicable Standard

According to FCC Part 15.207(a) and KDB 174176 D01 Line Conducted FAQ v01r01

7.1.2 Conformance Limit

Frequency(MHz)	Conducted Emission Limit	
	Quasi-peak	Average
0.15-0.5	66-56*	56-46*
0.5-5.0	56	46
5.0-30.0	60	50

Note: 1. *Decreases with the logarithm of the frequency
2. The lower limit shall apply at the transition frequencies
3. The limit decreases in line with the logarithm of the frequency in the range of 0.15 to 0.50MHz.

7.1.3 Measuring Instruments

The Measuring equipment is listed in the section 6.3 of this test report.

7.1.4 Test Configuration

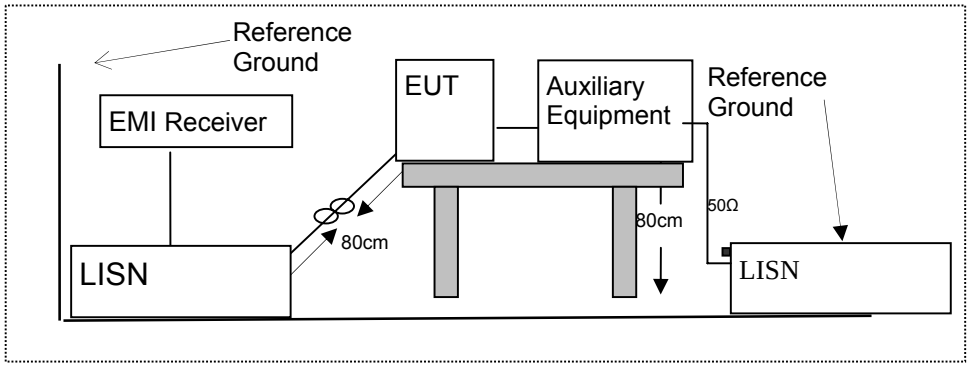

7.1.5 Test Procedure

According to the requirements in Section 13.1.4.1 of ANSI C63.10-2013 Conducted emissions the EUT measured in the frequency range between 0.15 MHz and 30 MHz using CISPR Quasi-Peak and average detector mode.

1. The EUT was placed 0.4 meter from the conducting wall of the shielding room.
2. The EUT was placed on a table which is 0.8m above ground plane.
3. Connect EUT to the power mains through a line impedance stabilization network (LISN). All other support equipments powered from additional LISN(s). The LISN provide 50 Ohm/ 50uH of coupling impedance for the measuring instrument.
4. Interconnecting cables that hang closer than 40 cm to the ground plane shall be folded back and forth in the center forming a bundle 30 to 40cm long.
5. I/O cables that are not connected to a peripheral shall be bundled in the center. The end of the cable may be terminated, if required, using the correct terminating impedance. The overall length shall not exceed 1 m.
6. LISN at least 80 cm from nearest part of EUT chassis.
7. The frequency range from 150KHz to 30MHz was searched.
8. Set the test-receiver system to Peak Detect Function and specified bandwidth(IF bandwidth=9KHz) with Maximum Hold Mode
9. For the actual test configuration, please refer to the related Item –EUT Test Photos.

7.1.6 Test Results

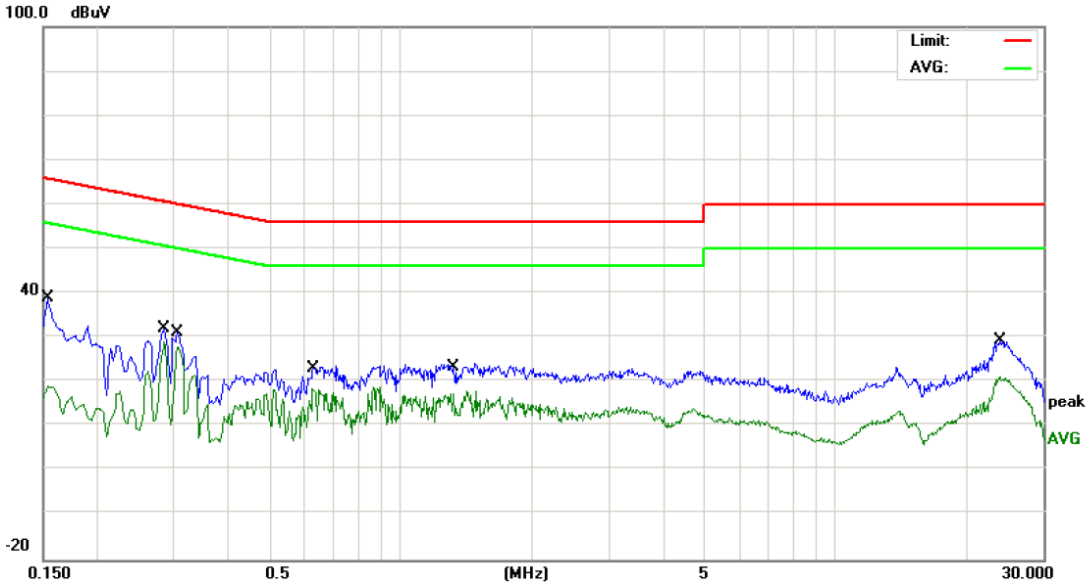

Site Phase: *L1* Temperature: 26

Limit: FCC Part 15B_(0.15-30MHz) _Main_QP Power: AC 120V/60Hz Humidity: 56 %

Mode: Mode 4

Note:

No.	Mk.	Freq.	Reading Level	Correct Factor	Measure-ment	Limit	Over		
		MHz	dBuV	dB	dBuV	dBuV	dB	Detector	Comment
1		0.1539	28.73	10.12	38.85	65.78	-26.93	QP	
2		0.1539	8.90	10.12	19.02	55.78	-36.76	AVG	
3		0.2859	21.78	10.14	31.92	60.64	-28.72	QP	
4	*	0.2859	18.88	10.14	29.02	50.64	-21.62	AVG	
5		0.3059	20.99	10.13	31.12	60.08	-28.96	QP	
6		0.3059	17.82	10.13	27.95	50.08	-22.13	AVG	
7		0.6260	13.91	9.79	23.70	56.00	-32.30	QP	
8		0.6260	8.83	9.79	18.62	46.00	-27.38	AVG	
9		1.3220	14.20	9.81	24.01	56.00	-31.99	QP	
10		1.3220	7.56	9.81	17.37	46.00	-28.63	AVG	
11		23.7979	19.31	9.97	29.28	60.00	-30.72	QP	
12		23.7979	11.23	9.97	21.20	50.00	-28.80	AVG	

*:Maximum data x:Over limit !:over margin

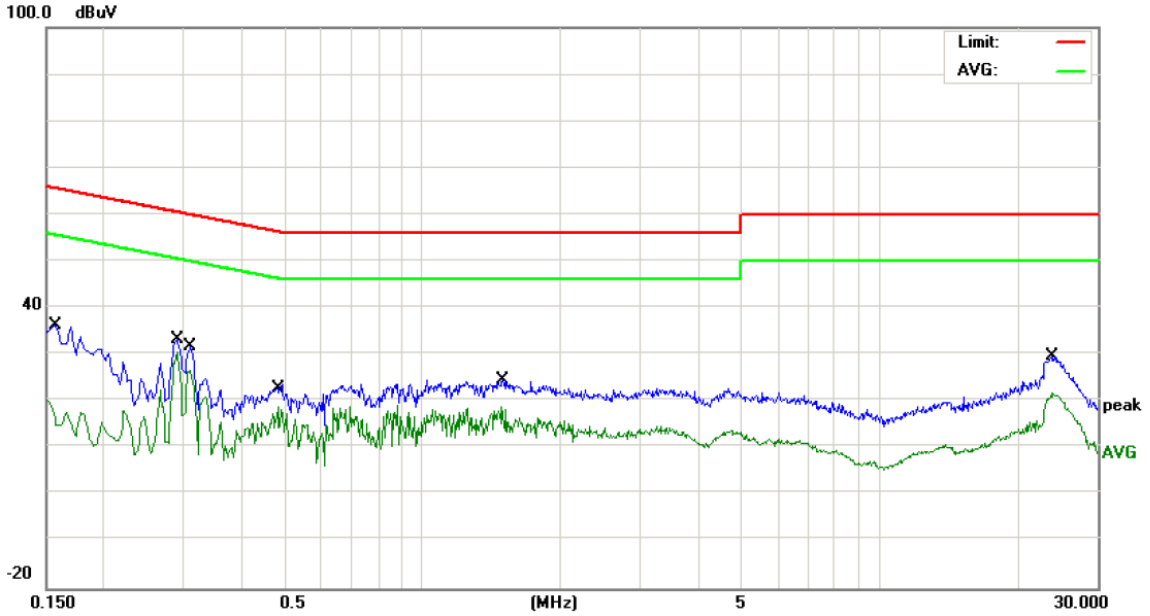

Site Phase: N Temperature: 26

Limit: FCC Part 15B_(0.15-30MHz) _Main_QP Power: AC 120V/60Hz Humidity: 56 %

Mode: Mode 4

Note:

No.	Mk.	Freq.	Reading Level	Correct Factor	Measure-ment	Limit	Over		
		MHz	dBuV	dB	dBuV	dBuV	dB	Detector	Comment
1		0.1580	26.30	10.07	36.37	65.56	-29.19	QP	
2		0.1580	10.39	10.07	20.46	55.56	-35.10	AVG	
3		0.2898	23.24	10.12	33.36	60.53	-27.17	QP	
4	*	0.2898	20.53	10.12	30.65	50.53	-19.88	AVG	
5		0.3099	21.51	10.12	31.63	59.97	-28.34	QP	
6		0.3099	16.58	10.12	26.70	49.97	-23.27	AVG	
7		0.4818	13.75	9.86	23.61	56.31	-32.70	QP	
8		0.4818	9.00	9.86	18.86	46.31	-27.45	AVG	
9		1.4899	14.87	9.81	24.68	56.00	-31.32	QP	
10		1.4899	8.97	9.81	18.78	46.00	-27.22	AVG	
11		23.8098	19.72	9.96	29.68	60.00	-30.32	QP	
12		23.8098	11.81	9.96	21.77	50.00	-28.23	AVG	

*:Maximum data x:Over limit !:over margin

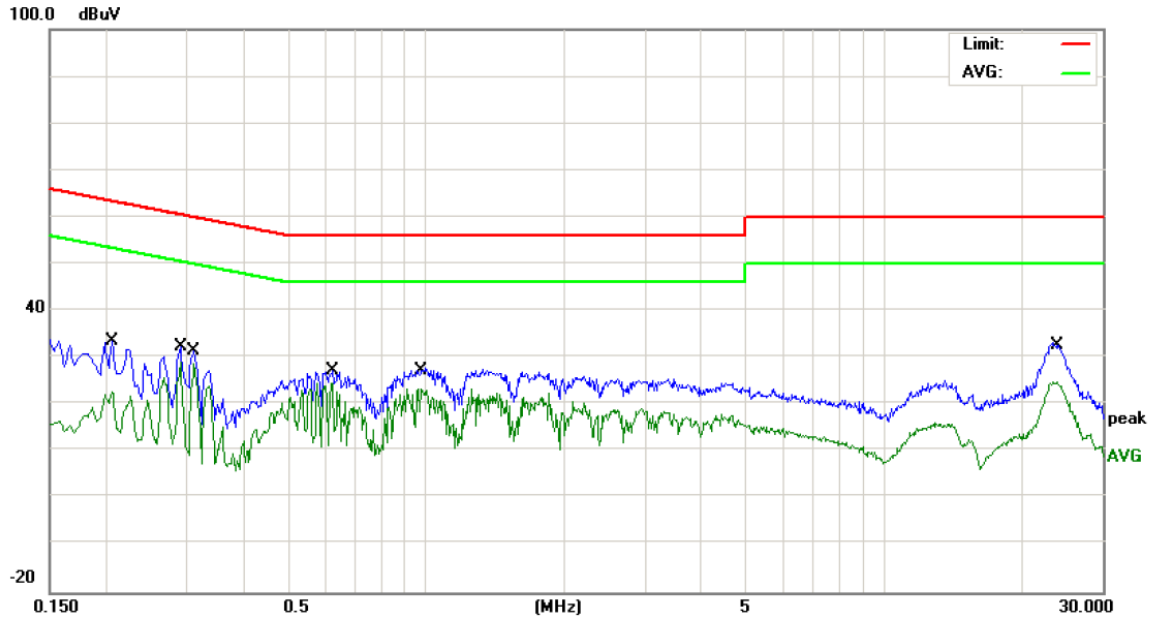

Site Phase: *L1* Temperature: 26

Limit: FCC Part 15B_(0.15-30MHz) _Main_QP Power: AC 240V/50Hz Humidity: 56 %

Mode: Mode 4

Note:

No.	Mk.	Freq.	Reading Level	Correct Factor	Measure-ment	Limit	Over		
		MHz	dBuV	dB	dBuV	dBuV	dB	Detector	Comment
1		0.2058	23.27	10.13	33.40	63.37	-29.97	QP	
2		0.2058	12.57	10.13	22.70	53.37	-30.67	AVG	
3		0.2898	22.30	10.14	32.44	60.53	-28.09	QP	
4		0.2898	18.79	10.14	28.93	50.53	-21.60	AVG	
5		0.3099	21.19	10.13	31.32	59.97	-28.65	QP	
6	*	0.3099	18.75	10.13	28.88	49.97	-21.09	AVG	
7		0.6260	17.39	9.79	27.18	56.00	-28.82	QP	
8		0.6260	14.88	9.79	24.67	46.00	-21.33	AVG	
9		0.9698	17.91	9.84	27.75	56.00	-28.25	QP	
10		0.9698	13.65	9.84	23.49	46.00	-22.51	AVG	
11		23.8338	23.31	9.97	33.28	60.00	-26.72	QP	
12		23.8338	14.90	9.97	24.87	50.00	-25.13	AVG	

*:Maximum data x:Over limit !:over margin

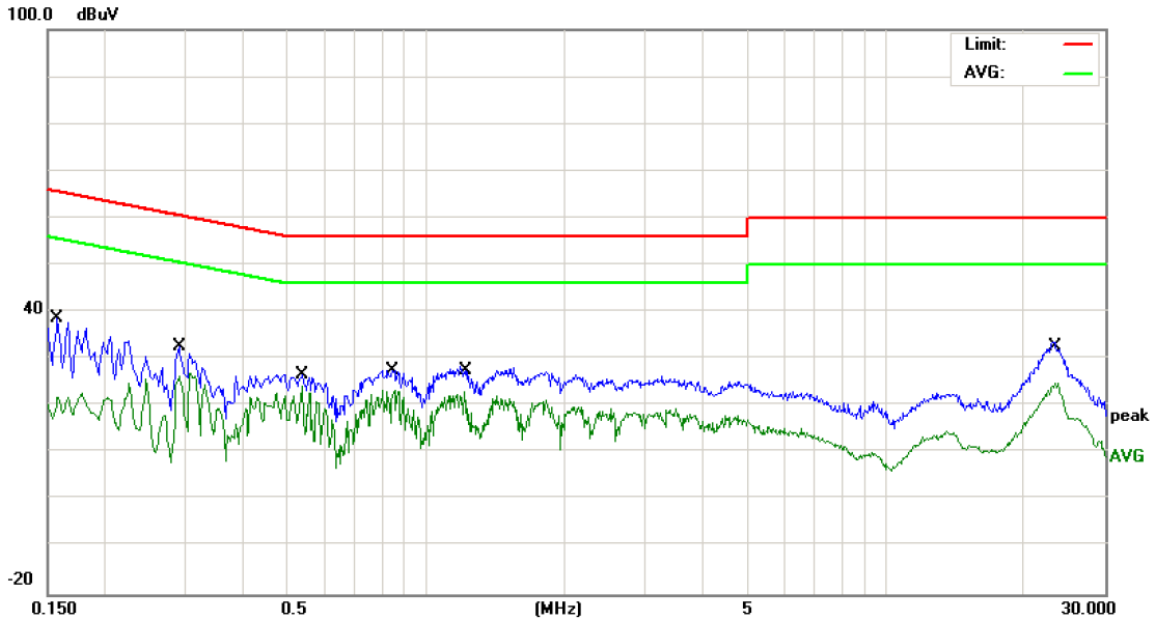

Site Phase: N Temperature: 26

Limit: FCC Part 15B_(0.15-30MHz) _Main_QP Power: AC 240V/50Hz Humidity: 56 %

Mode: Mode 4

Note:

No.	Mk.	Freq.	Reading Level	Correct Factor	Measure-ment	Limit	Over		
		MHz	dBuV	dB	dBuV	dBuV	dB	Detector	Comment
1		0.1580	28.45	10.07	38.52	65.56	-27.04	QP	
2		0.1580	12.65	10.07	22.72	55.56	-32.84	AVG	
3		0.2899	22.66	10.12	32.78	60.52	-27.74	QP	
4		0.2899	16.09	10.12	26.21	50.52	-24.31	AVG	
5		0.5380	16.95	9.82	26.77	56.00	-29.23	QP	
6	*	0.5380	14.33	9.82	24.15	46.00	-21.85	AVG	
7		0.8539	17.83	9.84	27.67	56.00	-28.33	QP	
8		0.8539	13.56	9.84	23.40	46.00	-22.60	AVG	
9		1.2099	18.52	9.84	28.36	56.00	-27.64	QP	
10		1.2099	13.17	9.84	23.01	46.00	-22.99	AVG	
11		23.7500	23.67	9.96	33.63	60.00	-26.37	QP	
12		23.7500	14.92	9.96	24.88	50.00	-25.12	AVG	

*:Maximum data x:Over limit !:over margin

7.2 RADIATED SPURIOUS EMISSION

7.2.1 Applicable Standard

According to FCC Part 15.247(d) and 15.209 and DA 00-705

7.2.2 Conformance Limit

According to FCC Part 15.247(d): radiated emissions which fall in the restricted bands, as defined in §15.205(a), must also comply with the radiated emission limits specified in §15.209(a) (see §15.205(c)).
According to FCC Part15.205, Restricted bands

MHz	MHz	MHz	GHz
0.090-0.110	16.42-16.423	399.9-410	4.5-5.15
10.495-0.505	16.69475-16.69525	608-614	5.35-5.46
2.1735-2.1905	16.80425-16.80475	960-1240	7.25-7.75
4.125-4.128	25.5-25.67	1300-1427	8.025-8.5
4.17725-4.17775	37.5-38.25	1435-1626.5	9.0-9.2
4.20725-4.20775	73-74.6	1645.5-1646.5	9.3-9.5
6.215-6.218	74.8-75.2	1660-1710	10.6-12.7
6.26775-6.26825	123-138	2200-2300	14.47-14.5
8.291-8.294	149.9-150.05	2310-2390	15.35-16.2
8.362-8.366	156.52475-156.52525	2483.5-2500	17.7-21.4
8.37625-8.38675	156.7-156.9	2690-2900	22.01-23.12
8.41425-8.41475	162.0125-167.17	3260-3267	23.6-24.0
12.29-12.293	167.72-173.2	3332-3339	31.2-31.8
12.51975-12.52025	240-285	3345.8-3358	36.43-36.5
12.57675-12.57725	322-335.4	3600-4400	(2)
13.36-13.41			

20dBc in any 100 kHz bandwidth outside the operating frequency band. In case the emission fall within the restricted band specified on 15.205(a), then the 15.209(a) limit in the table below has to be followed.

Restricted Frequency(MHz)	Field Strength (μV/m)	Field Strength (dBμV/m)	Measurement Distance
0.009~0.490	2400/F(KHz)	20 log (uV/m)	300
0.490~1.705	2400/F(KHz)	20 log (uV/m)	30
1.705~30.0	30	29.5	30
30-88	100	40	3
88-216	150	43.5	3
216-960	200	46	3
Above 960	500	54	3

Limits of Radiated Emission Measurement(Above 1000MHz)

Frequency(MHz)	Class B (dBuV/m) (at 3M)	
	PEAK	AVERAGE
Above 1000	74	54

Remark :1. Emission level in dBuV/m=20 log (uV/m)
2. Measurement was performed at an antenna to the closed point of EUT distance of meters.
3. Distance extrapolation factor =40log(Specific distance/ test distance)(dB);
Limit line=Specific limits(dBuV) + distance extrapolation factor.

7.2.3 Measuring Instruments

The Measuring equipment is listed in the section 6.3 of this test report.

7.2.4 Test Configuration

(a) For radiated emissions below 30MHz

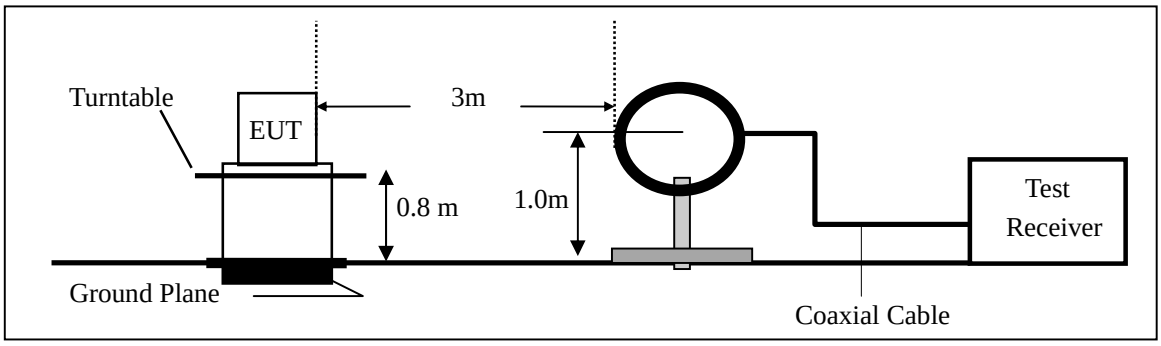

(b) For radiated emissions from 30MHz to 1000MHz

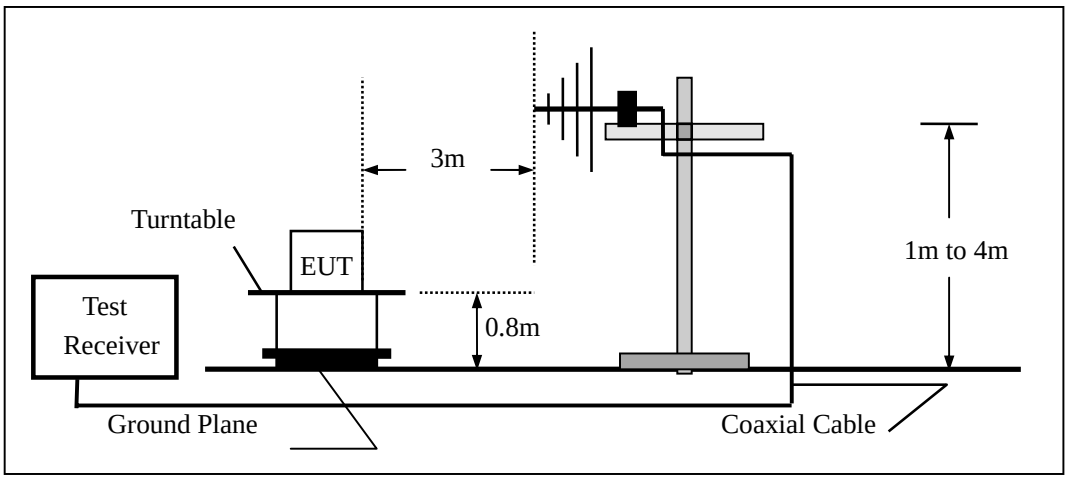

(c) For radiated emissions above 1000MHz

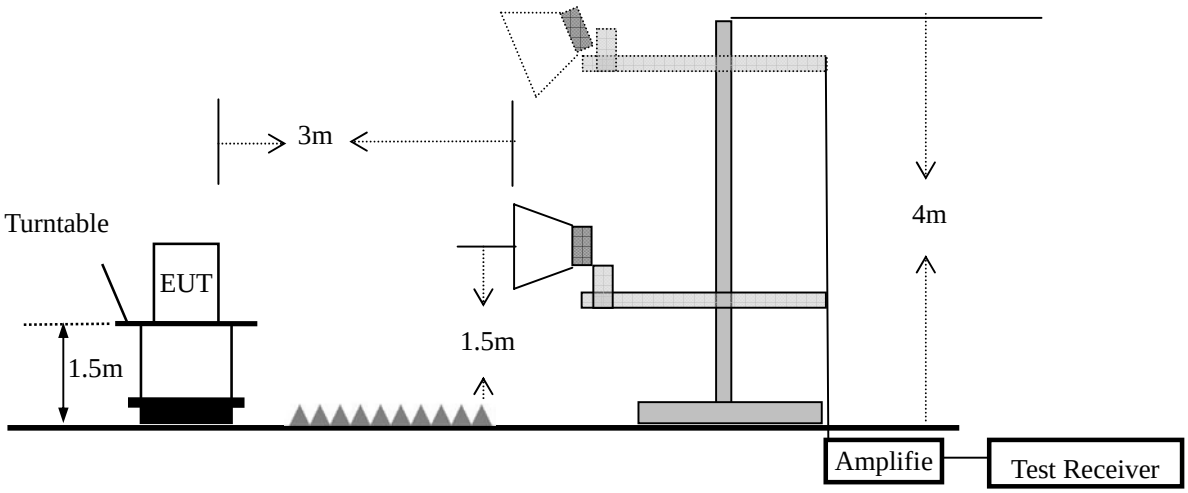

7.2.5 Test Procedure

The test site semi-anechoic chamber has met the requirement of NSA tolerance 4 dB according to the standards: ANSI C63.10-2013. The test distance is 3m.The setup is according to the requirements in Section 13.1.4.1 of ANSI C63.10-2013 and CAN/CSA-CEI/IEC CISPR 22.
This test is required for any spurious emission that falls in a Restricted Band, as defined in Section 15.205. It must be performed with the highest gain of each type of antenna proposed for use with the EUT.
Use the following spectrum analyzer settings:

Spectrum Parameter	Setting
Attenuation	Auto
Start Frequency	1000 MHz
Stop Frequency	10th carrier harmonic
RB / VB (emission in restricted band)	1 MHz / 1 MHz for Peak, 1 MHz / 10Hz for Average

Receiver Parameter	Setting
Attenuation	Auto
Start ~ Stop Frequency	9kHz~150kHz / RB 200Hz for QP
Start ~ Stop Frequency	150kHz~30MHz / RB 9kHz for QP
Start ~ Stop Frequency	30MHz~1000MHz / RB 120kHz for QP

a. The measuring distance of at 3 m shall be used for measurements at frequency up to 1GHz. For frequencies above 1GHz, any suitable measuring distance may be used.
b. The EUT was placed on the top of a rotating table 0.8 m for below 1GHz and 1.5m for above 1GHz the ground at a 3 meter. The table was rotated 360 degrees to determine the position of the highest radiation.
c. The height of the equipment or of the substitution antenna shall be 0.8 m for below 1GHz and 1.5m for above 1GHz; the height of the test antenna shall vary between 1 m to 4 m. Both horizontal and vertical polarizations of the antenna are set to make the measurement.
d. The initial step in collecting conducted emission data is a spectrum analyzer peak detector mode pre-scanning the measurement frequency range. Significant peaks are then marked and then Quasi Peak detector mode re-measured.
e. If the Peak Mode measured value compliance with and lower than Quasi Peak Mode Limit, the EUT shall be deemed to meet QP Limits and then no additional QP Mode measurement performed.
f. For the actual test configuration, please refer to the related Item –EUT Test Photos.

Note:

Both horizontal and vertical antenna polarities were tested
and performed pretest to three orthogonal axis. The worst case emissions were reported

During the radiated emission test, the Spectrum Analyzer was set with the following configurations:

Frequency Band (MHz)	Function	Resolution bandwidth	Video Bandwidth
30 to 1000	QP	120 kHz	300 kHz
Above 1000	Peak	1 MHz	1 MHz
	Average	1 MHz	10 Hz

Note: for the frequency ranges below 30 MHz, a narrower RBW is used for these ranges but the measured value should add a RBW correction factor (RBWCF) where RBWCF [dB] =10*lg(100 [kHz]/narrower RBW [kHz]). , the narrower RBW is 1 kHz and RBWCF is 20 dB for the frequency 9 kHz to 150 kHz, and the narrower RBW is 10 kHz and RBWCF is 10 dB for the frequency 150 kHz to 30 MHz.

7.2.6 Test Results

■ Spurious Emission below 30MHz (9KHz to 30MHz)

EUT:	ScreenBeam Smart Miracast module	Model No.:	RTL8812AU-CG
Temperature:	20 ℃	Relative Humidity:	48%
Test Mode:	Mode1/Mode2/Mode3	Test By:	Eileen Liu

Freq. (MHz)	Ant.Pol. H/V	Emission Level(dBuV/m)		Limit 3m(dBuV/m)		Over(dB)	
		PK	AV	PK	AV	PK	AV
--	--	--	--	--	--	--	--

Note: the amplitude of spurious emission that is attenuated by more than 20dB below the permissible limit has no need to be reported.
Distance extrapolation factor =20log(Specific distance/ test distance)(dB);
Limit line=Specific limits(dBuV) + distance extrapolation factor

■ Spurious Emission below 1GHz (30MHz to 1GHz)
All the modulation modes have been tested, and the worst result was report as below:

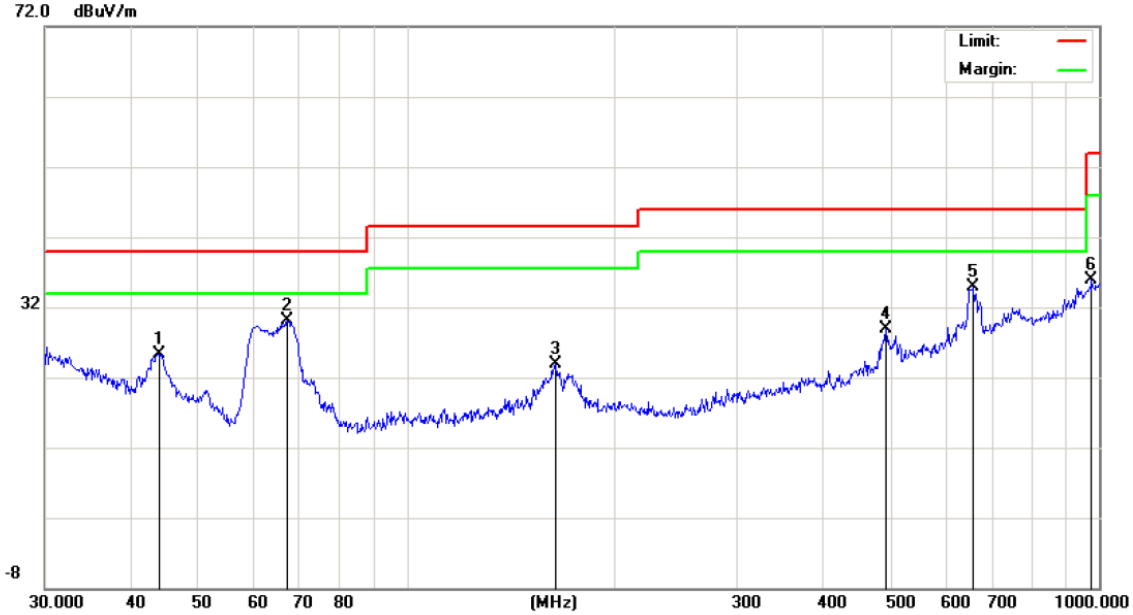

Site NTEK 9*6*6 Chamber #1 Polarization: *Vertical* Temperature: 24
Limit: FCC_PART15_B_03m_QP Power: AC 230V/50Hz Humidity: 50 %
Mode: High Channel
Note:

No.	Mk.	Freq.	Reading Level	Correct Factor	Measure-ment	Limit	Over		Antenna Height	Table Degree	
		MHz	dBuV	dB	dBuV/m	dBuV/m	dB	Detector	cm	degree	Comment
1		43.8119	11.83	13.45	25.28	40.00	-14.72	QP			
2	*	67.2022	21.81	8.23	30.04	40.00	-9.96	QP			
3		164.3301	11.16	12.75	23.91	43.50	-19.59	QP			
4		492.4685	10.36	18.64	29.00	46.00	-17.00	QP			
5		658.8361	13.07	21.82	34.89	46.00	-11.11	QP			
6		975.7527	7.50	28.43	35.93	54.00	-18.07	QP			

*:Maximum data x:Over limit !:over margin

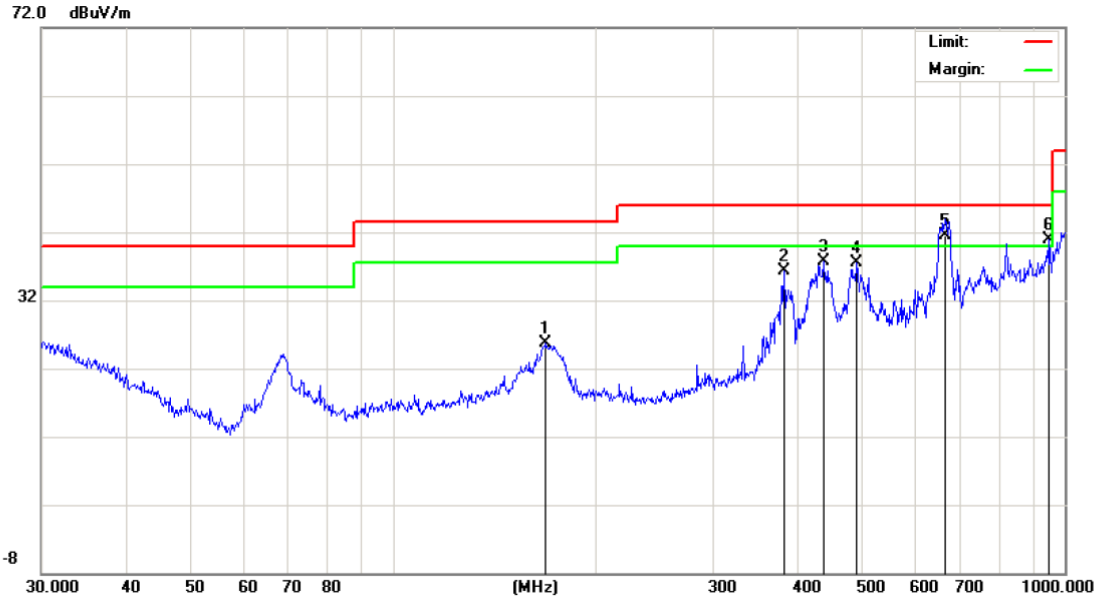

Site NTEK 9*6*6 Chamber #1 Polarization: ***Horizontal*** Temperature: 24

Limit: FCC_PART15_B_03m_QP Power: AC 230V/50Hz Humidity: 50 %

Mode: High Channel

Note:

No.	Mk.	Freq.	Reading Level	Correct Factor	Measure-ment	Limit	Over		Antenna Height	Table Degree	
		MHz	dBuV	dB	dBuV/m	dBuV/m	dB	Detector	cm	degree	Comment
1		169.0054	12.31	13.44	25.75	43.50	-17.75	QP			
2		382.5878	20.18	16.21	36.39	46.00	-9.61	QP			
3		437.1198	20.88	16.82	37.70	46.00	-8.30	QP			
4		490.7447	18.87	18.60	37.47	46.00	-8.53	QP			
5	*	663.4729	19.66	21.94	41.60	46.00	-4.40	QP			
6	!	948.7609	13.40	27.59	40.99	46.00	-5.01	QP			

*:Maximum data x:Over limit !:over margin

■ Spurious Emission Above 1GHz (1GHz to 25GHz)

EUT:	ScreenBeam Smart Miracast module	Model No.:	RTL8812AU-CG
Temperature:	20 ℃	Relative Humidity:	48%
Test Mode:	Mode1/Mode2/Mode3	Test By:	Eileen Liu

All the modulation modes have been tested, and the worst result was report as below:

Frequency (MHz)	Meter Reading (dBμV)	Factor (dB)	Emission Level (dBμV/m)	Limits (dBμV/m)	Margin (dB)	Remark	Comment
Low Channel (2402 MHz)-Above 1G							
4804.335	59.41	-3.64	55.77	74.00	-18.23	Pk	Vertical
4804.335	42.25	-3.64	38.61	54.00	-15.39	AV	Vertical
7206.119	59.68	-0.95	58.73	74.00	-15.27	Pk	Vertical
7206.119	43.31	-0.95	42.36	54.00	-11.64	AV	Vertical
4804.237	59.75	-3.64	56.11	74.00	-17.89	Pk	Horizontal
4804.237	42.21	-3.64	38.57	54.00	-15.43	AV	Horizontal
7206.264	58.93	-0.95	57.98	74.00	-16.02	Pk	Horizontal
7206.264	37.88	-0.95	36.93	54.00	-17.07	AV	Horizontal
Mid Channel (2441 MHz)-Above 1G							
4880.236	59.92	-3.68	56.24	74.00	-17.76	Pk	Vertical
4880.236	41.12	-3.68	37.44	54.00	-16.56	AV	Vertical
7320.114	59.63	-0.82	58.81	74.00	-15.19	Pk	Vertical
7320.114	40.02	-0.82	39.20	54.00	-14.80	AV	Vertical
4880.285	56.61	-3.68	52.93	74.00	-21.07	Pk	Horizontal
4880.285	38.86	-3.68	35.18	54.00	-18.82	AV	Horizontal
7320.367	59.67	-0.82	58.85	74.00	-15.15	Pk	Horizontal
7320.367	39.23	-0.82	38.41	54.00	-15.59	AV	Horizontal
High Channel (2480 MHz)- Above 1G							
4960.369	55.56	-3.59	51.97	74.00	-22.03	Pk	Vertical
4960.369	36.92	-3.59	33.33	54.00	-20.67	AV	Vertical
7440.097	59.57	-0.68	58.89	74.00	-15.11	Pk	Vertical
7440.097	41.14	-0.68	40.46	54.00	-13.54	AV	Vertical
4960.112	59.85	-3.59	56.26	74.00	-17.74	Pk	Horizontal
4960.112	39.26	-3.59	35.67	54.00	-18.33	AV	Horizontal
7440.268	60.03	-0.68	59.35	74.00	-14.65	Pk	Horizontal
7440.268	39.63	-0.68	38.95	54.00	-15.05	AV	Horizontal

Note: (1) All Readings are Peak Value (VBW=3MHz) and Peak Value (VBW=10Hz).
(2) Emission Level= Reading Level+Probe Factor +Cable Loss.
(3)All other emissions more than 20dB below the limit.

■ Spurious Emission in Restricted Band 2310-2390MHz and 2483.5-2500MHz

EUT:	ScreenBeam Smart Miracast module	Model No.:	RTL8812AU-CG
Temperature:	20 ℃	Relative Humidity:	48%
Test Mode:	Mode1/Mode2/Mode3	Test By:	Eileen Liu

All the modulation modes were tested, the data of the worst mode are described in the following table

Frequency (MHz)	Meter Reading (dBμV)	Factor (dB)	Emission Level (dBμV/m)	Limits (dBμV/m)	Margin (dB)	Detector Type	Comment
1Mbps							
2390	59.86	-13.06	46.8	74	-27.20	Pk	Vertical
2390	55.34	-13.06	42.28	54	-11.72	AV	Vertical
2483.5	60.72	-12.78	47.94	74	-26.06	Pk	Horizontal
2483.5	54.21	-12.78	41.43	54	-12.57	AV	Horizontal

7.3 6DB BANDWIDTH

7.3.1 Applicable Standard

According to FCC Part 15.247(a)(2) and KDB 558074 DTS 01 Meas. Guidance v03r04

7.3.2 Conformance Limit

The minimum permissible 6dB bandwidth is 500 kHz.

7.3.3 Measuring Instruments

The Measuring equipment is listed in the section 6.3 of this test report.

7.3.4 Test Setup

Please refer to Section 6.1 of this test report.

7.3.5 Test Procedure

The testing follows KDB 558074 DTS 01 Meas. Guidance v03r04
The RF output of EUT was connected to the spectrum analyzer by RF cable and attenuator.
The path loss was compensated to the results for each measurement.
Set to the maximum power setting and enable the EUT transmit continuously.
The EUT was operating in controlled its channel.
Use the following spectrum analyzer settings:
Span = the frequency band of operation
RBW = 100KHz
VBW ≥ 3*RBW
Sweep = auto
Detector function = peak
Trace = max hold

7.3.6 Test Results

EUT:	ScreenBeam Smart Miracast module	Model No.:	RTL8812AU-CG
Temperature:	20 ℃	Relative Humidity:	48%
Test Mode:	Mode1/Mode2/Mode3	Test By:	Eileen Liu

Channel	Frequency (MHz)	6dB bandwidth (kHz)	Limit (kHz)	Result
Low	2402	681.816	500	Pass
Middle	2440	706.845	500	Pass
High	2480	668.542	500	Pass

6dB Bandwidth plot on channel 00	1Mbps

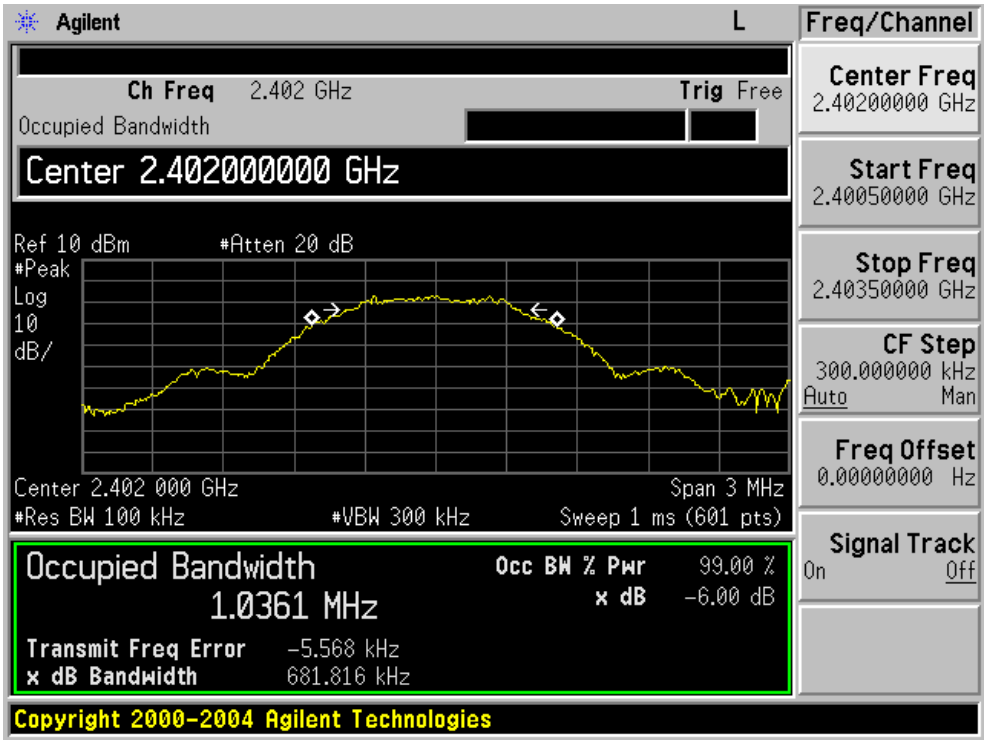

6dB Bandwidth plot on channel 19	1Mbps

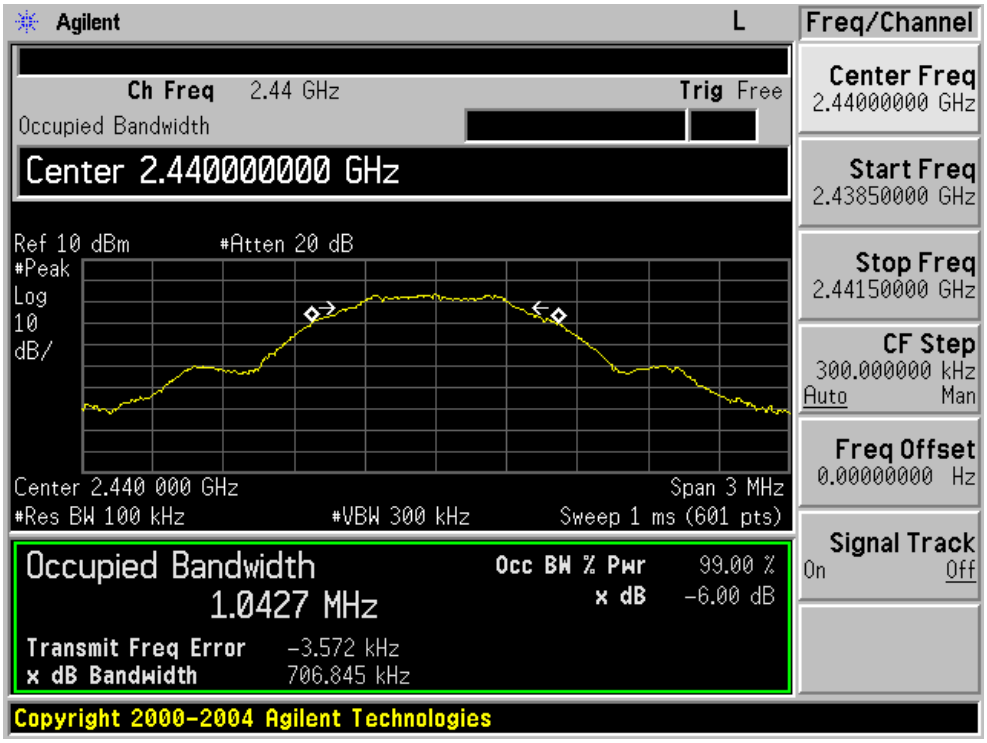

6dB Bandwidth plot on channel 39	1Mbps

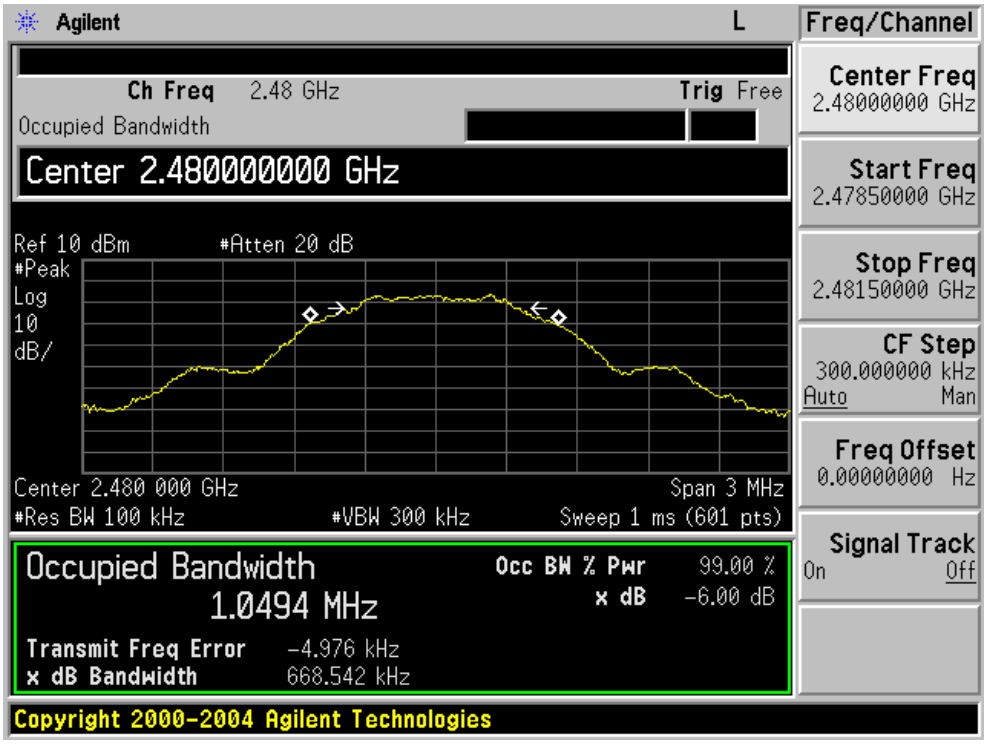

7.4 DUTY CYCLE

7.4.1 Applicable Standard

According to KDB 558074)6)b), issued 06/09/2015

7.4.2 Conformance Limit

No limit requirement.

7.4.3 Measuring Instruments

The Measuring equipment is listed in the section 6.3 of this test report.

7.4.4 Test Setup

Please refer to Section 6.1 of this test report.

7.4.5 Test Procedure

The zero-span mode on a spectrum analyzer or EMI receiver if the response time and spacing between bins on the sweep are sufficient to permit accurate measurements of the on and off times of the transmitted signal. Set the center frequency of the instrument to the center frequency of the transmission. Set RBW ⩾ OBW if possible; otherwise, set RBW to the largest available value. Set VBW ⩾ RBW. Set detector = peak or average. The zero-span measurement method shall not be used unless both RBW and VBW are > 50/T and the number of sweep points across duration T exceeds 100. (For example, if VBW and/or RBW are limited to 3 MHz, then the zero-span method of measuring duty cycle shall not be used if T ⩽ 16.7 microseconds.)

The transmitter output is connected to the Spectrum Analyzer. We tested accroding to the zero-span measurement method, 6.0)b) in KDB 558074(issued 06/09/2015)

The largest availble value of RBW is 8 MHz and VBW is 50 MHz. The zero-span method of measuring duty cycle shall not be used if T ⩽ 6.25 microseconds. (50/6.25 = 8)

The zero-span method was used because all measured T data are > 6.25 microseconds and both RBW and VBW are > 50/T.

The RF output of EUT was connected to the spectrum analyzer by RF cable and attenuator.
The path loss was compensated to the results for each measurement.
Set to the maximum power setting and enable the EUT transmit continuously.
The EUT was operating in controlled its channel.
Use the following spectrum analyzer settings:
Span = Zero Span
RBW = 8MHz(the largest available value)
VBW = 8MHz (≥ RBW)
Number of points in Sweep >100
Detector function = peak
Trace = Clear write
Measure T_{total} and T_{on}
Calculate Duty Cycle = T_{on} / T_{total} and Duty Cycle Factor=10*log(1/Duty Cycle)

7.4.6 Test Results

EUT:	ScreenBeam Smart Miracast module	Model No.:	RTL8812AU-CG
Temperature:	20 ℃	Relative Humidity:	48%
Test Mode:	Mode1/Mode2/Mode3	Test By:	Eileen Liu

Modulation Mode	Data rate	T_{on}	T_{total}	Duty Cycle	Duty Cycle Factor (dB)
GFSK	1Mbps	-	-	100%	0

Duty Cycle plot on channel 19	1Mbps

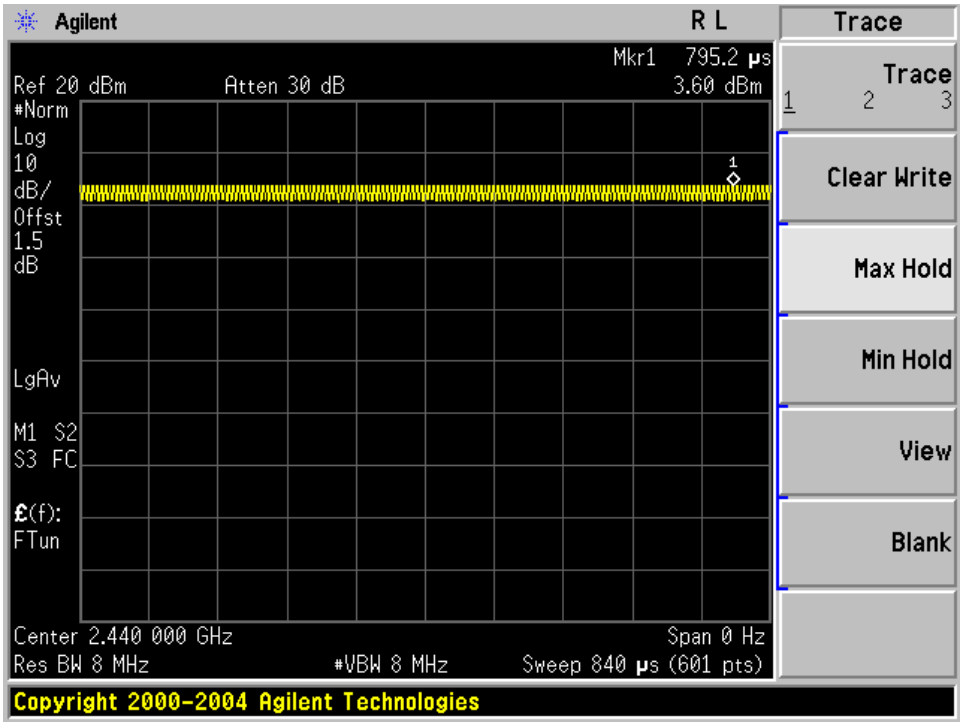

7.5 PEAK OUTPUT POWER

7.5.1 Applicable Standard

According to FCC Part 15.247(b)(3) and KDB 558074 DTS 01 Meas. Guidance v03r04

7.5.2 Conformance Limit

The maximum peak conducted output power of the intentional radiator for systems using digital modulation in the 2400 - 2483.5 MHz bands shall not exceed: 1 Watt (30dBm). If transmitting antenna of directional gain greater than 6dBi is used, the peak output power from the intentional radiator shall be reduced below the above stated value by the amount in dB that the directional gain of the antenna exceeds 6 dBi. In case of point-to-point operation, the limit has to be reduced by 1dB for every 3dB that the directional gain of the antenna exceeds 6dBi.

7.5.3 Measuring Instruments

The Measuring equipment is listed in the section 6.3 of this test report.

7.5.4 Test Setup

Please refer to Section 6.1 of this test report.

7.5.5 Test Procedure

The testing follows KDB 558074 DTS 01 Meas. Guidance v03r04
The RF output of EUT was connected to the spectrum analyzer by RF cable and attenuator.
The path loss was compensated to the results for each measurement.
Set to the maximum power setting and enable the EUT transmit continuously.
The EUT was operating in controlled its channel.
Use the following spectrum analyzer settings:
Set the RBW ≧DTS bandwidth(about 1MHz).
Set VBW =3*RBW(about 3MHz)
Set the span ≧3*RBW
Set Sweep time = auto couple.
Set Detector = peak.
Set Trace mode = max hold.
Allow trace to fully stabilize.
Use peak marker function to determine the peak amplitude level.

7.5.6 Test Results

EUT:	ScreenBeam Smart Miracast module	Model No.:	RTL8812AU-CG
Temperature:	20 ℃	Relative Humidity:	48%
Test Mode:	Mode1/Mode2/Mode3	Test By:	Eileen Liu

Test Channel	Frequency (MHz)	Power Setting	Peak Output Power (dBm)	LIMIT (dBm)	Verdict
1Mbps					
00	2402	Default	4.32	30	PASS
19	2440	Default	5.22	30	PASS
39	2480	Default	5.12	30	PASS

Peak output Power plot on channel 00	1Mbps

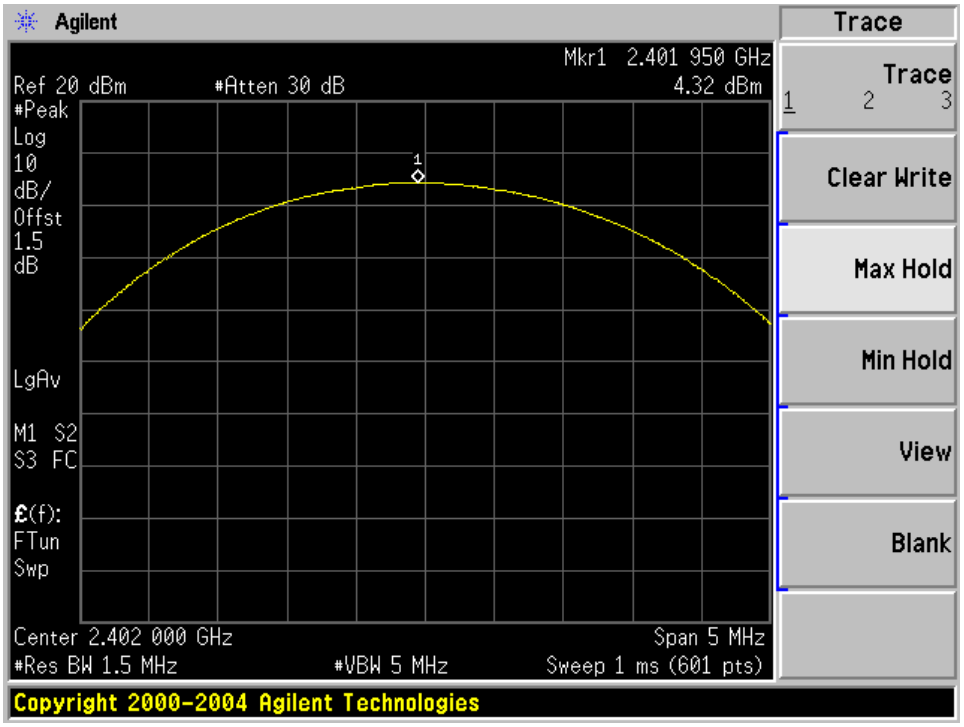

Peak output Power plot on channel 19	1Mbps

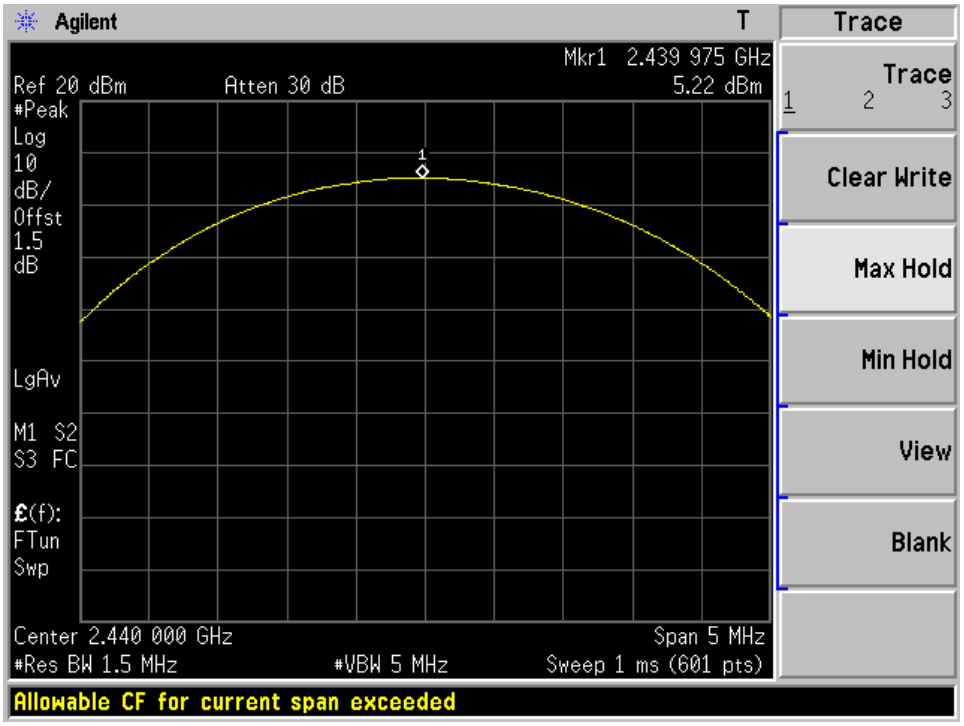

Peak output Power plot on channel 39	1Mbps

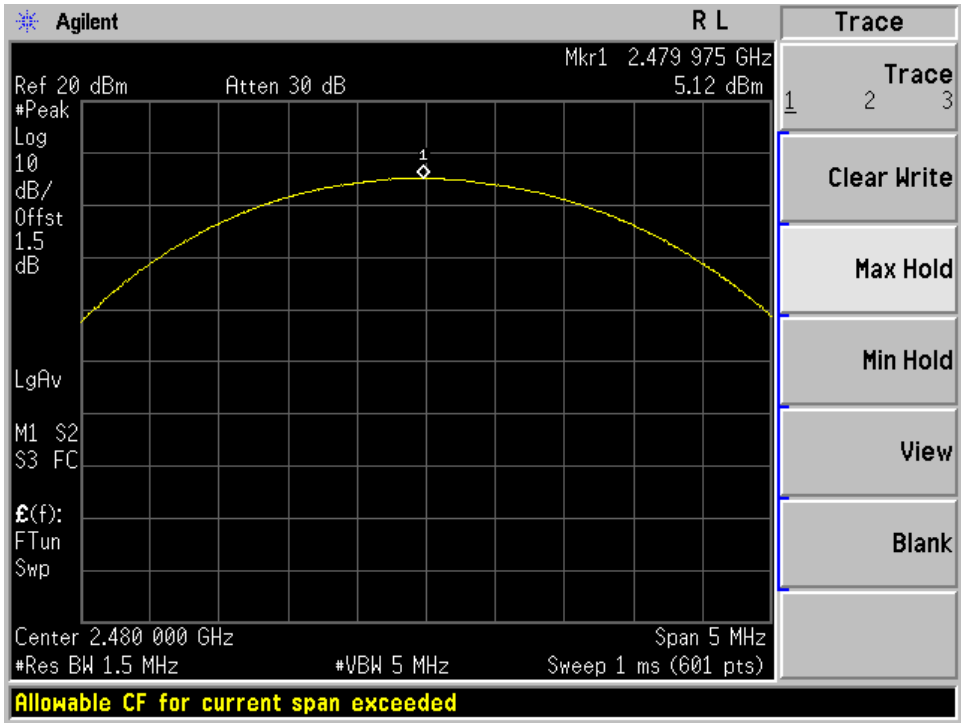

7.6 POWER SPECTRAL DENSITY

7.6.1 Applicable Standard

According to FCC Part 15.247(e) and KDB 558074 DTS 01 Meas. Guidance v03r04

7.6.2 Conformance Limit

The transmitter power spectral density conducted from the transmitter to the antenna shall not be greater than 8 dBm in any 3 kHz band during any time interval of continuous transmission.

7.6.3 Measuring Instruments

The Measuring equipment is listed in the section 6.3 of this test report.

7.6.4 Test Setup

Please refer to Section 6.1 of this test report.

7.6.5 Test Procedure

The testing follows Measurement Procedure 10.3 Method AVGPSD of FCC KDB Publication No. 558074 D01 DTS Meas. Guidance v03r04
This procedure may be used when the maximum (average) conducted output power was used to demonstrate compliance to the output power limit. This is the baseline method for determining the maximum (average) conducted PSD level. If the instrument has an RMS power averaging detector, it must be used; otherwise, use the sample detector. The EUT must be configured to transmit continuously (duty cycle ≥ 98%); otherwise sweep triggering/signal gating must be implemented to ensure that measurements are made only when the EUT is transmitting at its maximum power control level (no transmitter off time is to be considered).
The RF output of EUT was connected to the spectrum analyzer by RF cable and attenuator.
The path loss was compensated to the results for each measurement.
Set to the maximum power setting and enable the EUT transmit continuously.
The EUT was operating in controlled its channel.
a) Set instrument center frequency to DTS channel center frequency.
b) Set span to at least 1.5 times the OBW.
c) Set RBW to: 3 kHz ≤ RBW ≤ 100 kHz. .
d) Set VBW ≥3 x RBW.
e) Detector = power averaging (RMS) or sample detector (when RMS not available).
f) Ensure that the number of measurement points in the sweep ≥ 2 x span/RBW.
g) Sweep time = auto couple.
h) Employ trace averaging (RMS) mode over a minimum of 100 traces.
i) Use the peak marker function to determine the maximum amplitude level.
j) If measured value exceeds limit, reduce RBW (no less than 3 kHz) and repeat (note that this may require zooming in on the emission of interest and reducing

7.6.6 Test Results

EUT:	ScreenBeam Smart Miracast module	Model No.:	RTL8812AU-CG
Temperature:	20 ℃	Relative Humidity:	48%
Test Mode:	Mode1/Mode2/Mode3	Test By:	Eileen Liu

Test Channel	Frequency (MHz)	Power Density (dBm/3KHz)	Limit (dBm/3KHz)	Verdict
1Mbps				
00	2402	-13.26	8	PASS
19	2440	-11.80	8	PASS
39	2480	-11.00	8	PASS

Power spectral density plot on channel 00	1Mbps

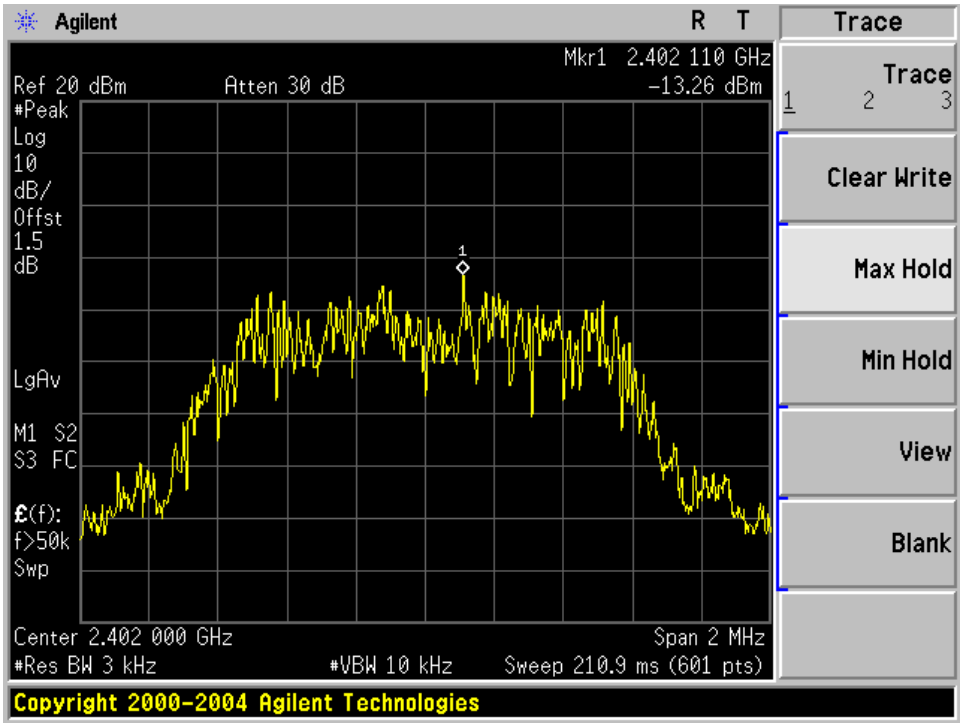

Power spectral density plot on channel 19	1Mbps

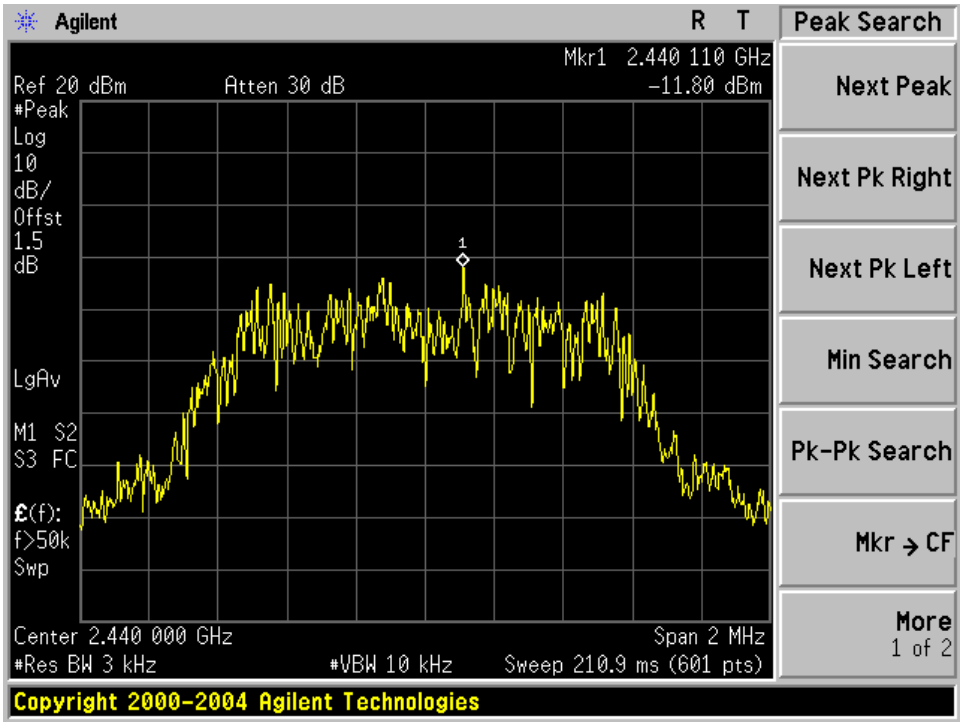

Power spectral density plot on channel 39	1Mbps

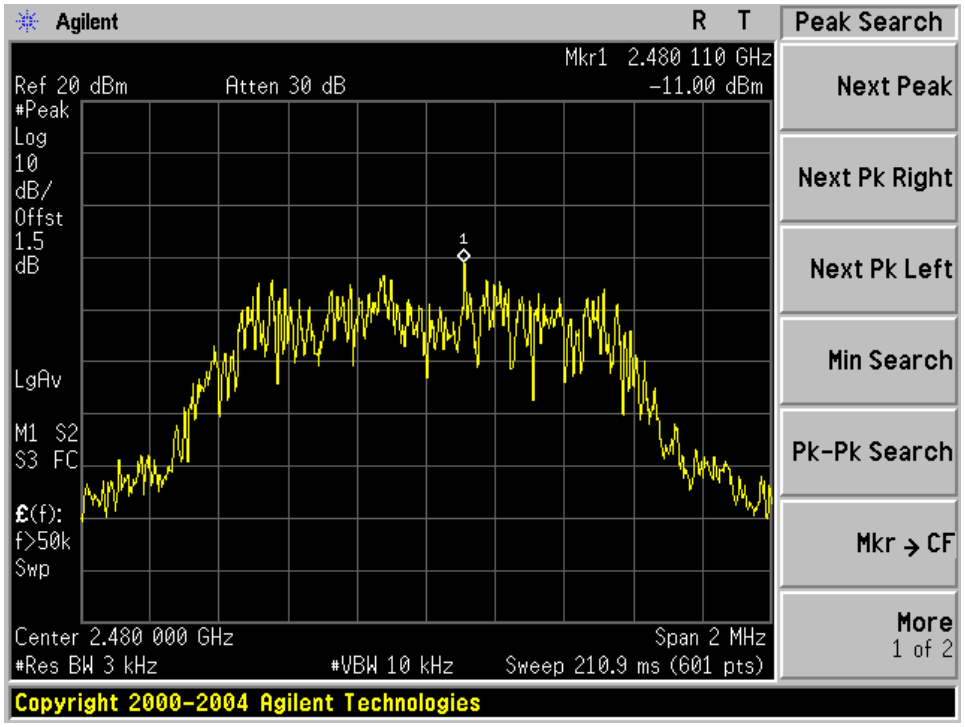

7.7 CONDUCTED BAND EDGE MEASUREMENT

7.7.1 Applicable Standard

According to FCC Part 15.247(d) and KDB 558074 DTS 01 Meas. Guidance v03r04

7.7.2 Conformance Limit

In any 100 kHz bandwidth outside the frequency band in which the spread spectrum or digitally modulated intentional radiator is operating, the radio frequency power that is produced by the intentional radiator shall be at least 20 dB below that in the 100 kHz bandwidth within the band that contains the highest level of the desired power, based on either an RF conducted or a radiated measurement, provided the transmitter demonstrates compliance with the peak conducted power limits. If the transmitter complies with the conducted power limits based on the use of RMS averaging over a time interval, as permitted under paragraph (b)(3) of this section, the attenuation required under this paragraph shall be 30 dB instead of 20 dB.

7.7.3 Measuring Instruments

The Measuring equipment is listed in the section 6.3 of this test report.

7.7.4 Test Setup

Please refer to Section 6.1 of this test report.

7.7.5 Test Procedure

The testing follows FCC KDB Publication No. 558074 D01 DTS Meas. Guidance v03r04.
The RF output of EUT was connected to the spectrum analyzer by RF cable and attenuator.
The path loss was compensated to the results for each measurement.
Set to the maximum power setting and enable the EUT transmit continuously.
The EUT was operating in controlled its channel.
Set RBW to 100 kHz and VBW of spectrum analyzer to 300 kHz with a convenient frequency span including 100 kHz bandwidth from band edge.
Measure the highest amplitude appearing on spectral display and set it as a reference level. Plot the graph with marking the highest point and edge frequency.
Repeat above procedures until all measured frequencies were complete.

7.7.6 Test Results

EUT:	ScreenBeam Smart Miracast module	Model No.:	RTL8812AU-CG
Temperature:	20 ℃	Relative Humidity:	48%
Test Mode:	Mode5/Mode7	Test By:	Eileen Liu

GFSK mode: Band Edge-Low Channel

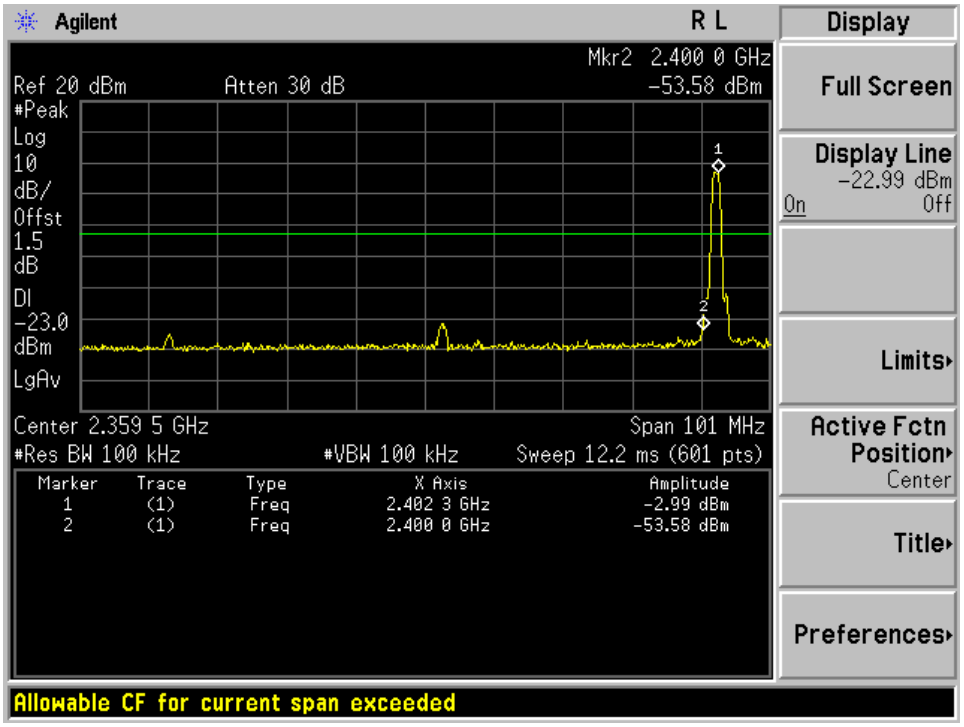

GFSK mode: Band Edge-High Channel

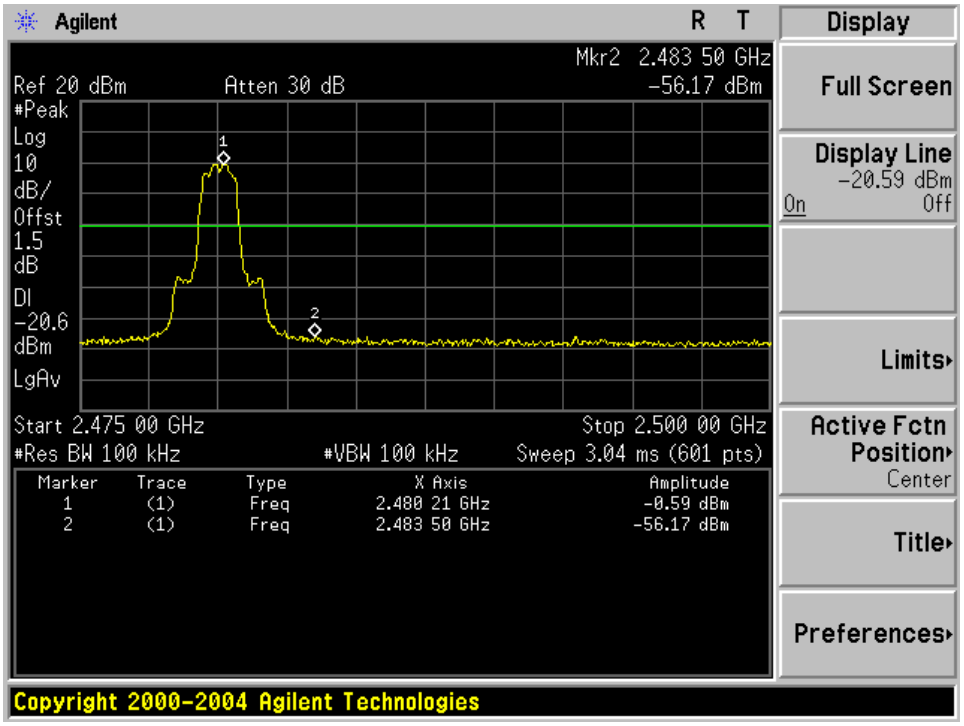

7.8 ANTENNA APPLICATION

7.8.1 Antenna Requirement

15.203 requirement: For intentional device, according to 15.203: an intentional radiator shall be designed to ensure that no antenna other than that furnished by the responsible party shall be used with the device.

7.8.2 Result

The EUT antenna is permanent attached antenna. It comply with the standard requirement.

END OF REPORT