PRODUCT SPECIFICATION

Version 1.1

ScreenBeam 802.11 a/b/g/n/ac WiFi Module

Model Number: SBRT8812AU

2.4G channel：1-11
5G channel：36-48 ;149-165

Custom Approval Section		
Custom Name		
Department		
Approval		Date：

DESIGN	CHECK	APPROVAL

Actiontec Electronics, Inc.

760 North Mary Ave., Sunnyvale, California 94086 United States

Document revision history

Revision	Date	Approved by	Remarks
Version 1.0	2015-02-27		Draft
Version 1.1	2015-04-17		Adding statement

1. General Description

This document is to specify the product requirements for 802.11a/b/g/n/ac USB Module. This Card is based on Realtek RTL8812AU chipset that complied with IEEE 802.11b/g/n/ac Draft 3.0 compatible WLAN ,and it is also backward complied with IEEE 802.11a standard from 5.15~5.825GHz wideband and IEEE 802.11b/g standard from 2.4~2.5GHz. It can be used to provide up to 54Mbps for IEEE 802.11a and IEEE 802.11g,11Mbps for IEEE 802.11b and 150Mbps for IEEE 802.11n and 433.3Mbps for IEEE 802.11ac to connect your wireless LAN.

With seamless roaming, fully interoperability and advanced security with WEP standard, 802.11 a/b/g/n/ac USB Module offers absolute interoperability with different vendors 802.11a/b/g/n/ac.Access Points through the wireless LAN.

2. Features

- Compatible with IEEE 802.11b standard to provide wireless 11Mbps date rate.
- Compatible with IEEE 802.11g standard to provide wireless 54Mbps date rate.
- Compatible with IEEE 802.11n standard to provide wireless 150Mbps date rate.
- Compatible with IEEE 802.11ac standard to provide wireless 433.3Mbps date rate.
- Operation at 2.4~2.5GHz and 5.15~5.825GHz frequency band to meet worldwide regulations
- Provides simple legacy and 20MHz/40MHz/80MHz co-existence mechanisms to ensure backward and network compatibility.
- Supports infrastructure networks via Access Point and ad-hoc network via peer-to-peer communication
- Supports IEEE 802.11i(WPA and WPA2),WAPI,. enhanced security
- Friendly user configuration and diagnostic utilities
- Drivers support Windows XP,Vista.Win7
- High speed USB 2.0 interface
- ROHS compliant

3. Application Diagrams

3.1 Functional Block Diagram

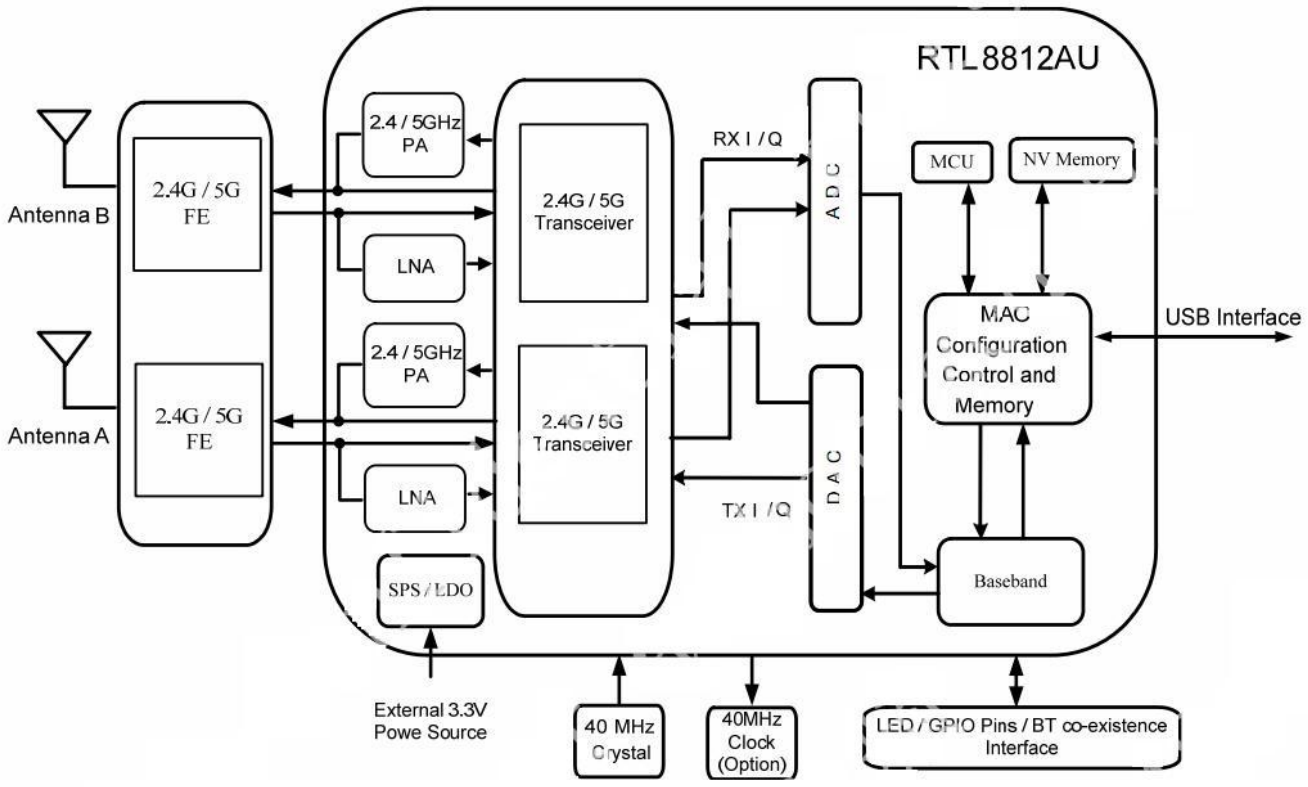

3.2 General Requirements

3.2.1 IEEE 802.11b Section

	Feature	Detailed Description
3.2.1.1	Standard	● IEEE 802.11b
3.2.1.2	Radio and Modulation Schemes	● DQPSK , DBPSK , DSSS , and CCK
3.2.1.3	Operating Frequency	● 2412 ～ 2472MHz ISM band
3.2.1.4	Channel Numbers	● 11 channels for United States ● 13 channels for Europe Countries ● 14 channels for Japan
3.2.1.5	Data Rate	● 11,5.5,2,and 1Mbps
3.2.1.6	Media Access Protocol	● CSMA/CA with ACK
3.2.1.7	Transmitter Output Power at Antenna Connector	● Typical RF Output Power at each RF chain,Data Rate and at room Temp. 25℃ ● 17dBm(±2dB) at 1,2,5.5,11Mbps
3.2.1.8	Receiver Sensitivity at Antenna Connector	● Typical Sensitivity at Which Frame(1000-byte PDUs)Error Rate=8% ● -76 dBm at 2Mbps ● -76 dBm for 11Mbps

3.2.2 IEEE 802.11g Section

	Feature	Detailed Description
3.2.2.1	Standard	● IEEE 802.11g
3.2.2.2	Radio and Modulation Type	● QPSK , BPSK , 16QAM ,64QAM with OFDM
3.2.2.3	Operating Frequency	● 2412 ～ 2472MHz ISM band
3.2.2.4	Channel Numbers	● 11 channels for United States ● 13 channels for Europe Countries ● 13 channels for Japan
3.2.2.5	Data Rate	● 6,9,12,18,24,36,48,54Mbps
3.2.2.6	Media Access Protocol	● CSMA/CA with ACK
3.2.2.7	Transmitter Output Power at Antenna Connector	● Typical RF Output Power(tolerance±2dB) at each RF chain, Data Rate and at roomTemp. 25℃ ● +17 dBm at 6,9Mbps ● +16 dBm at 12,18Mbps ● +15 dBm at 24,36Mbps ● +14 dBm at 48,54Mbps
3.2.2.8	Receiver Sensitivity at Antenna Connector	● Typical Sensitivity at each RF chain. Frame(1000-byte PDUs)Error Rate<10% at room Temp 25℃ ● -82 dBm at 6Mbps ● -81 dBm at 9Mbps ● -79 dBm at 12Mbps ● -77 dBm at 18Mbps ● -74 dBm at 24Mbps ● -70 dBm at 36Mbps ● -66 dBm at 48Mbps ● -65 dBm at 54Mbps

3.2.3 IEEE 802.11a Section

	Feature	Detailed Description
3.2.3.1	Standard	● IEEE 802.11a
3.2.3.2	Radio and Modulation Type	● QPSK , BPSK , 16QAM ,64QAM with OFDM
3.2.3.3	Operating Frequency	● 5.18 ~ 5.24GHZ, 5.745~5.825GHz for US and Canada ● 5.18 ~ 5.24GHZ, 5.745~5.825GHz for Japan ● 5.18 ~ 5.24GHZ, 5.745~5.825GHz Hz for Europe ● 5.18 ~ 5.24GHZ, 5.745~5.825GHz for China
3.2.3.4	Channel Numbers	● 12 non-overlapping channels for US and Canada ● 8 non-overlapping channels for Japan ● 19 non-overlapping channels for Europe ● 4 non-overlapping channels for China
3.2.3.5	Data Rate	● 6,9,12,18,24,36,48,54Mbps
3.2.3.6	Media Access Protocol	● CSMA/CA with ACK
3.2.3.7	Transmitter Output Power at Antenna Connector	● Typical RF Output Power(tolerance±2dB) at each RF chain, Data Rate and at roomTemp. 25℃ ● +14 dBm at 6,9Mbps ● +13 dBm at 12,18Mbps ● +12 dBm at 24,36Mbps ● +11 dBm at 48,54Mbps
3.2.3.8	Receiver Sensitivity at Antenna Connector	● Typical Sensitivity at each RF chain. Frame(1000-byte PDUs)Error Rate<10% at room Temp 25℃ ● -82 dBm at 6Mbps ● -81 dBm at 9Mbps ● -79 dBm at 12Mbps ● -77 dBm at 18Mbps ● -74 dBm at 24Mbps ● -70 dBm at 36Mbps ● -66 dBm at 48Mbps ● -65 dBm at 54Mbps

3.2.4 IEEE 802.11n Section

<table>
<tr><th></th><th>Feature</th><th>Detailed Description</th></tr>
<tr><td>3.2.4.1</td><td>Standard</td><td>● IEEE 802.11n</td></tr>
<tr><td>3.2.4.2</td><td>Radio and Modulation Type</td><td>● BPSK , QPSK , 16QAM ,64QAM with OFDM</td></tr>
<tr><td>3.2.4.3</td><td>Operating Frequency</td><td>● 2.4GHz band:2412 ~ 2472MHz 2412 ~ 2462MHz (for FCC)
● 5GHz and:5.18 ~ 5.24GHZ, 5.745~5.825GHz</td></tr>
<tr><td>3.2.4.4</td><td>Data Rate</td><td>
<table>
<tr><td rowspan="2">MCS</td><td colspan="2">GI=800ns</td><td colspan="2">GI=400ns</td></tr>
<tr><td>20MHz</td><td>40MH</td><td>20MHz</td><td>40MHz</td></tr>
<tr><td>0</td><td>6.5</td><td>13.5</td><td>7.2</td><td>15</td></tr>
<tr><td>1</td><td>13</td><td>27</td><td>14.4</td><td>30</td></tr>
<tr><td>2</td><td>19.5</td><td>40.5</td><td>21.7</td><td>45</td></tr>
<tr><td>3</td><td>26</td><td>54</td><td>28.9</td><td>60</td></tr>
<tr><td>4</td><td>39</td><td>81</td><td>43.3</td><td>90</td></tr>
<tr><td>5</td><td>52</td><td>108</td><td>57.8</td><td>120</td></tr>
<tr><td>6</td><td>58.5</td><td>121.5</td><td>65.0</td><td>135</td></tr>
<tr><td>7</td><td>65</td><td>135</td><td>72.2</td><td>150</td></tr>
</table>
</td></tr>
<tr><td>3.2.4.5</td><td>Media Access Protocol</td><td>● CSMA/CA with ACK</td></tr>
<tr><td rowspan="3">3.2.4.6</td><td rowspan="3">Transmitter Output Power at Antenna Connector</td><td colspan="2">● Typical RF Output Power(tolerance±2dB) at each RF chain,Data Rate and at roomTemp. 25℃</td></tr>
<tr><td>● 2.4GHz Band/HT20
+14dBm at MCS0~7</td><td>● 2.4GHz Band/HT40
+14dBm at MCS0~7</td></tr>
<tr><td>● 5GHz Band/HT20
+11dBm at MCS0~7</td><td>● 5GHz Band/HT40
+11dBm at MCS0~7</td></tr>
<tr><td rowspan="3">3.2.4.7</td><td rowspan="3">Receiver Sensitivity at Antenna Connector</td><td colspan="2">Typical Sensitivity at each RF chain at Which Frame(1000-byte PDUs)Error Rate=10% and at room Temp. 25℃</td></tr>
<tr><td>2.4GHz Band/HT20
● -82dBm at MCS0
● -79dBm at MCS1
● -77dBm at MCS2
● -74dBm at MCS3
● -70dBm at MCS4
● -66dBm at MCS5
● -65dBm at MCS6
● -64dBm at MCS7</td><td>2.4GHz Band/HT40
● -79dBm at MCS0
● -76dBm at MCS1
● -74dBm at MCS2
● -71dBm at MCS3
● -67dBm at MCS4
● -63dBm at MCS5
● -62dBm at MCS6
● -61dBm at MCS7</td></tr>
<tr><td>5GHz Band/HT20
● -82dBm at MCS0
● -79dBm at MCS1
● -77dBm at MCS2
● -74dBm at MCS3
● -70dBm at MCS4
● -66dBm at MCS5
● -65dBm at MCS6
● -64dBm at MCS7</td><td>5GHz Band/HT40
● -79dBm at MCS0
● -76dBm at MCS1
● -74dBm at MCS2
● -71dBm at MCS3
● -67dBm at MCS4
● -63dBm at MCS5
● -62dBm at MCS6
● -61dBm at MCS7</td></tr>
</table>

3.2.5 IEEE 802.11ac Section

	Feature	Detailed Description
3.2.5.1	Standard	● IEEE 802.11ac
3.2.5.2	Radio and Modulation Type	● QPSK , BPSK , 16QAM ,64QAM,256QAM with OFDM
3.2.5.3	Operating Frequency	● 5.18 ~ 5.24GHZ, 5.745~5.825GHz for US and Canada ● 5.15~5.35GHz and 5.47~5.725GHz for Japan ● 5.15~5.35GHz and 5.47~5.725GHz for Europe ● 5.725~5.825GHz for China
3.2.5.4	Channel Numbers	● 12 non-overlapping channels for US and Canada ● 8 non-overlapping channels for Japan ● 19 non-overlapping channels for Europe ● 4 non-overlapping channels for China
3.2.5.5	Data Rate	● at most 433.3 Mbps
3.2.5.6	Media Access Protocol	● CSMA/CA with ACK
3.2.5.7	Transmitter Output Power at Antenna Connector	● Typical RF Output Power(tolerance±2dB) at each RF chain, Data Rate and at roomTemp. 25℃ ● +11 dBm at HT20 / HT40
3.2.5.8	Receiver Sensitivity at Antenna Connector	● Typical Sensitivity at each RF chain. Frame(1000-byte PDUs)Error Rate<10% at room Temp 25℃ 5GHz Band / HT20 ● -82dBm at MCS0 ● -79dBm at MCS1 ● -77dBm at MCS2 ● -74dBm at MCS3 ● -70dBm at MCS4 ● -66dBm at MCS5 ● -65dBm at MCS6 ● -64dBm at MCS7 ● -59dBm at MCS8 ● -57dBm at MCS9 5GHz Band / HT40 ● -79dBm at MCS0 ● -76dBm at MCS1 ● -74dBm at MCS2 ● -71dBm at MCS3 ● -67dBm at MCS4 ● -63dBm at MCS5 ● -62dBm at MCS6 ● -61dBm at MCS7 ● -56dBm at MCS8 ● -54dBm at MCS9 5GHz Band / HT80 ● -76dBm at MCS0 ● -73dBm at MCS1 ● -71dBm at MCS2 ● -68dBm at MCS3 ● -64dBm at MCS4 ● -60dBm at MCS5 ● -59dBm at MCS6 ● -58dBm at MCS7 ● -55dBm at MCS8 ● -51dBm at MCS9

4. Electrical and Thermal Characteristics

4.1 Temperature Limit Ratings

Parameter	Minimum	Maximum	Units
Storage Temperature	-40	+80	℃
Ambient Operating Temperature	0	60	℃
Junction Temperature	0	125	℃

4.2 General Section

	Feature	Detailed Description
5.2.1	Antenna Type	● Integrated antenna
5.2.2	Operating Voltage	● 5V±10%
5.2.3	Current Consumption	● ＜900mA
5.2.4	Form Factor and Interface	● High Speed USB2.0 Interface

4.3 Software

Driver	Windows XP/ WinCE/ Vista,/ Win7, Linux, MAC
Security	64/128-bits WEP, WPA, WPA2

5 Connector Definition

5-Pin 1.25 mm PAD

Pin	1	2	3	4	5
Definition	Power_EN	GND	D+	D-	VDD (+5V)

6 Mechanical Dimensions

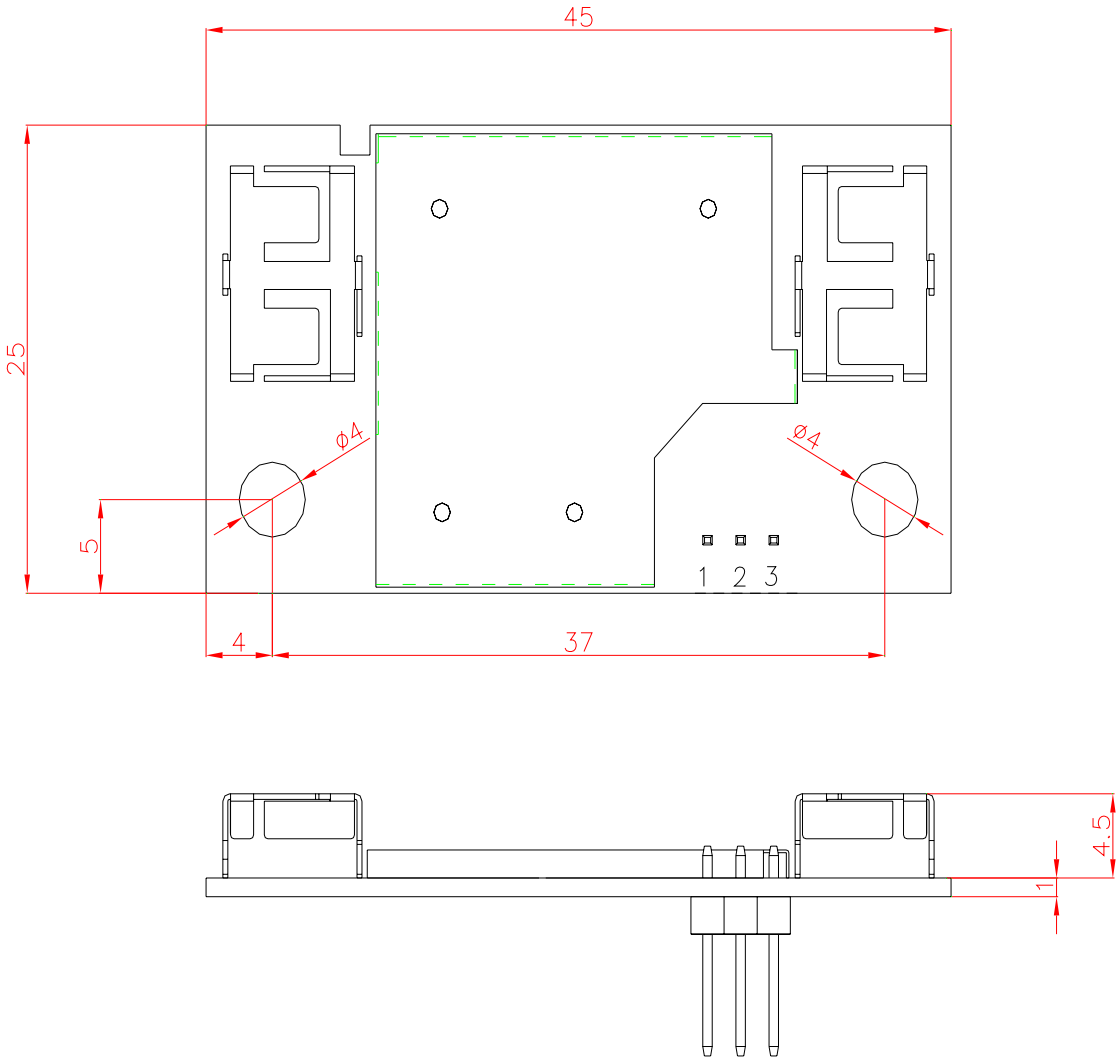

*TLERANCES ARE +/-0.5mm UNLESS OTHERWISE SPECIFIED
*UNIT:mm

Appendix 1 : Schematic

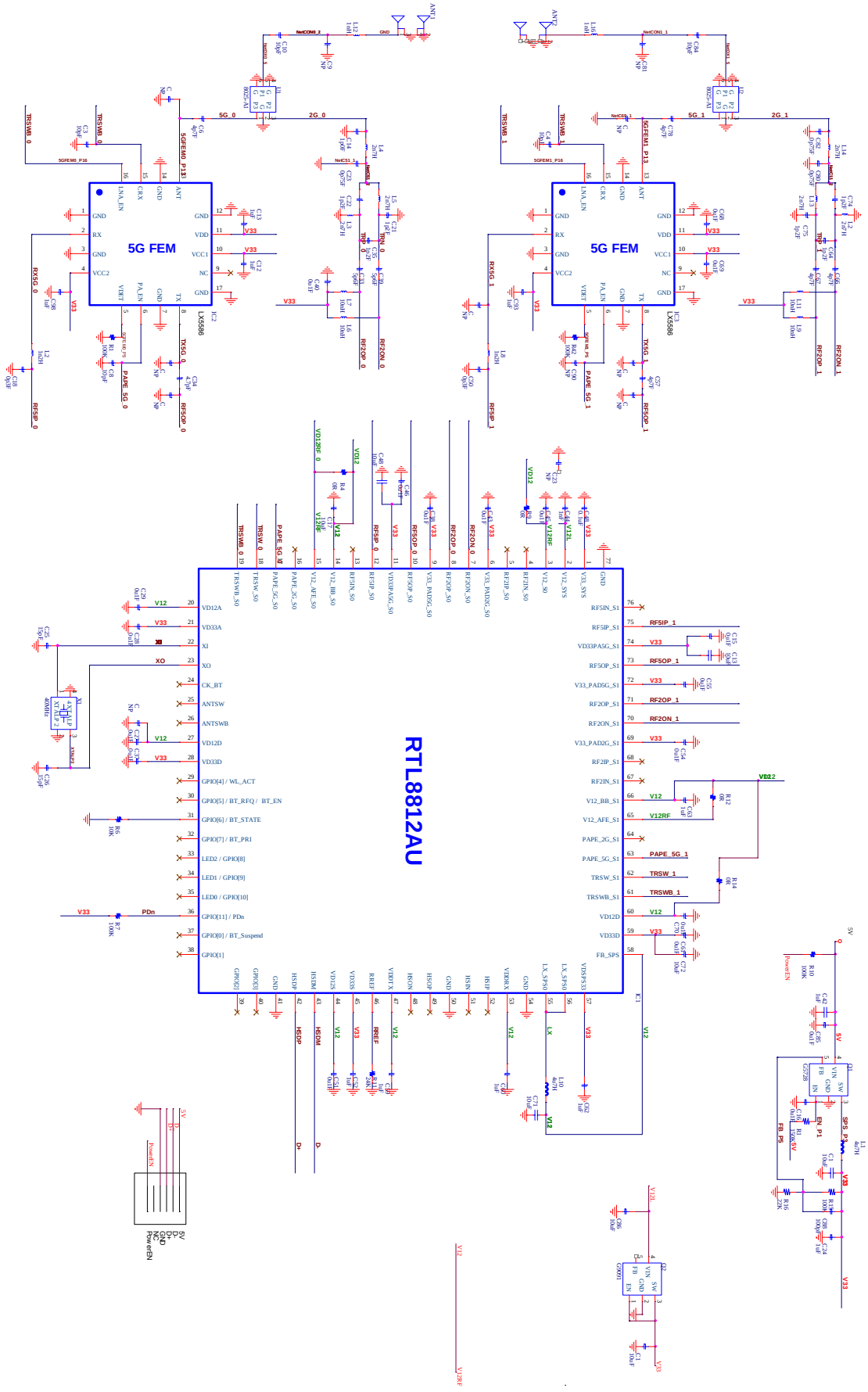

Appendix 2 : Statement

FCC Important Notes:

(1)

FCC Statement

This equipment complies with FCC RF radiation exposure limits set forth for an uncontrolled environment. This transmitter must not be co-located or operating in conjunction with any other antenna or transmitter.
This equipment complies with Part 15 of the FCC Rules. Operation is subject to the following two conditions:
(1) This device may not cause harmful interference, and
(2) This device must accept any interference received, including interference that may cause undesired operation.

The devices must be installed and used in strict accordance with the manufacturer's instructions as described in the user documentation that comes with the product. Modular could be only used in mobile or fix device, and could not be used in any portable device.

Caution!
The manufacturer is not responsible for any radio or TV interference caused by unauthorized modifications to this equipment. Such modifications could void the user authority to operate the equipment.

FCC Radiation Exposure Statement

This equipment complies with FCC radiation exposure limits set forth for an uncontrolled environment. This equipment should be installed and operated with minimum distance 20cm between the radiator and your body.
This device and it's antennas(s) must not be co-located or operating in conjunction with any other antenna or transmitter except in accordance with FCC multi-transmitter product procedures.

(2)

Co-location Warning:

This device and its antenna(s) must not be co-located or operating in conjunction with any other antenna or transmitter.

(3)

OEM integration instructions:

This device is intended only for OEM integrators under the following conditions:
The transmitter module may not be co-located with any other transmitter or antenna. The module shall be only used with the integral antenna(s) that has been originally tested and certified with this module.

As long as 3 conditions above are met, further transmitter test will not be required. However, the OEM integrator is still responsible for testing their end-product for any additional compliance requirements required with this module installed (for example, digital device emissions, PC peripheral requirements, etc.).

(4)

Validity of using the module certification:

In the event that these conditions cannot be met (for example certain laptop configurations or co-location with another transmitter), then the FCC authorization for this module in combination with the host equipment is no longer considered valid and the FCC ID of the module cannot be used on the final product. In these circumstances, the OEM integrator will be responsible for re-evaluating the end product (including the transmitter) and obtaining a separate FCC authorization.

(5)

End product labeling:

The final end product must be labeled in a visible area with the following:
"Contains Transmitter Module FCC ID: LNQSBRT8812AU".

(6)

Information that must be placed in the end user manual:

The OEM integrator has to be aware not to provide information to the end user regarding how to install or remove this RF module in the user's manual of the end product which integrates this module. The end user manual shall include all required regulatory information/warning as show in this manual.

FCC Caution: Any changes or modifications not expressly approved by the party responsible for compliance could void the user's authority to operate this equipment.
IEEE 802.11b or 802.11g operation of this product in the USA is firmware-limited to channels 1 through 11.
The device for the band 5150-5250 MHz is only for indoor usage to reduce the potential for harmful interference to co-channel mobile satellite systems.