Company: Actiontec Electronics Inc

Test of: T3200BV, C2300A

To: FCC 15.407 (DFS Bands)

Report No.: ATEC23-U10_Master Rev A

MASTER TEST REPORT

MiCOM Labs

opening wireless markets

MASTER TEST REPORT

FROM

Test of: Actiontec Electronics Inc T3200BV, C2300A

To: FCC CFR 47 Part 15 Subpart E 15.407 (DFS Bands)

Test Report Serial No.: ATEC23-U10 Master Rev A

This report supersedes: NONE

As a result of the 6 Mbyte FCC file size limitation potentially large test reports require to be split into smaller components. This document is the Master document controlling Addendum reports as listed below. This Master document combined with the Addendums demonstrate compliance with the standard

Master Document Number	Addendum Reports
ATEC23-U10_Master	ATEC23-U10_Conducted
	ATEC23-U10_Radiated
	ATEC23-U10_DFS
	ATEC23-U2 (FCC Part 15B & ICES-003)

Applicant: Actiontec Electronics Inc
760 N Mary Avenue
Sunnyvale, California 94085
USA

Product Function: Bonded VDSL2/G.fast Wireless AC Gateway Router

Issue Date: 17th April 2017

This Test Report is Issued Under the Authority of:

MiCOM Labs, Inc.
575 Boulder Court
Pleasanton California 94566
USA
Phone: +1 (925) 462-0304
Fax: +1 (925) 462-0306
www.micomlabs.com

ACCREDITED
TESTING CERT #2381.01

MiCOM Labs is an ISO 17025 Accredited Testing Laboratory

Table of Contents

1. ACCREDITATION, LISTINGS & RECOGNITION....4
1.1. TESTING ACCREDITATION....4
1.2. RECOGNITION....5
1.3. PRODUCT CERTIFICATION....6
2. DOCUMENT HISTORY....7
3. TEST RESULT CERTIFICATE....8
4. REFERENCES AND MEASUREMENT UNCERTAINTY....9
4.1. Normative References....9
4.2. Test and Uncertainty Procedure....10
5. PRODUCT DETAILS AND TEST CONFIGURATIONS....11
5.1. Technical Details....11
5.2. Scope Of Test Program....12
5.3. Equipment Model(s) and Serial Number(s)....13
5.4. Antenna Details....13
5.5. Cabling and I/O Ports....13
5.6. Test Configurations....14
5.7. Equipment Modifications....14
5.8. Deviations from the Test Standard....14
6. TEST SUMMARY....15
7. TEST EQUIPMENT CONFIGURATION(S)....16
7.1. Conducted RF Emission Test Set-up(s)....16
7.2. Radiated Spurious Emission Test Set-up > 1 GHz....18
7.3. DFS - Conducted....21
8. MEASUREMENT AND PRESENTATION OF TEST DATA....23

This test report may be reproduced in full only. The document may only be updated by MiCOM Labs personnel. All changes will be noted in the Document History section of the report.

1. ACCREDITATION, LISTINGS & RECOGNITION

1.1. TESTING ACCREDITATION

MiCOM Labs, Inc. is an accredited Electrical testing laboratory per the international standard ISO/IEC 17025:2005. The company is accredited by the American Association for Laboratory Accreditation (A2LA) www.a2la.org test laboratory number 2381.01. MiCOM Labs test schedule is available at the following URL; http://www.a2la.org/scopepdf/2381-01.pdf

Accredited Laboratory

A2LA has accredited

MICOM LABS

Pleasanton, CA

for technical competence in the field of

Electrical Testing

This laboratory is accredited in accordance with the recognized International Standard ISO/IEC 17025:2005 *General requirements for the competence of testing and calibration laboratories*. This accreditation demonstrates technical competence for a defined scope and the operation of a laboratory quality management system (*refer to joint ISO-ILAC-IAF Communiqué dated 8 January 2009*).

Presented this 4th day of February 2016.

Senior Director of Quality & Communications
For the Accreditation Council
Certificate Number 2381.01
Valid to November 30, 2017

For the tests or types of tests to which this accreditation applies, please refer to the laboratory's Electrical Scope of Accreditation.

1.2. RECOGNITION

MiCOM Labs, Inc has widely recognized wireless testing capabilities. Our international recognition includes Conformity Assessment Body designation by APEC MRA countries. MiCOM Labs test reports are accepted globally.

Country	Recognition Body	Status	Phase	Identification No.
USA	Federal Communications Commission (FCC)	TCB	-	US0159 Listing #: 102167
Canada	Industry Canada (IC)	FCB	APEC MRA 2	US0159 Listing #: 4143A-2 4143A-3
Japan	MIC (Ministry of Internal Affairs and Communication)	CAB	APEC MRA 2	RCB 210
	VCCI	--	--	A-0012
Europe	European Commission	NB	EU MRA	NB 2280
Australia	Australian Communications and Media Authority (ACMA)	CAB	APEC MRA 1	US0159
Hong Kong	Office of the Telecommunication Authority (OFTA)	CAB	APEC MRA 1	
Korea	Ministry of Information and Communication Radio Research Laboratory (RRL)	CAB	APEC MRA 1	
Singapore	Infocomm Development Authority (IDA)	CAB	APEC MRA 1	
Taiwan	National Communications Commission (NCC) Bureau of Standards, Metrology and Inspection (BSMI)	CAB	APEC MRA 1	
Vietnam	Ministry of Communication (MIC)	CAB	APEC MRA 1	

EU MRA – European Union Mutual Recognition Agreement.

NB – Notified Body

APEC MRA – Asia Pacific Economic Community Mutual Recognition Agreement. Recognition agreement under which test lab is accredited to regulatory standards of the APEC member countries.

Phase I - recognition for product testing
Phase II – recognition for both product testing and certification

1.3. PRODUCT CERTIFICATION

MiCOM Labs, Inc. is an accredited Product Certification Body per the international standard ISO/IEC 17065:2012. The company is accredited by the American Association for Laboratory Accreditation (A2LA) www.a2la.org test laboratory number 2381.02. MiCOM Labs test schedule is available at the following URL; http://www.a2la.org/scopepdf/2381-02.pdf

Accredited Product Certification Body

A2LA has accredited

MICOM LABS

Pleasanton, CA

This product certification body is accredited in accordance with the recognized International Standard ISO/IEC 17065:2012 *Requirements for bodies certifying products, processes and services*. This accreditation demonstrates technical competence for a defined scope and the operation of a management system.

Presented this 4th day of February 2016.

Senior Director of Quality & Communications
For the Accreditation Council
Certificate Number 2381.02
Valid to November 30, 2017

For the product certification schemes to which this accreditation applies, please refer to the organization's Product Certification Scope of Accreditation.

United States of America – Telecommunication Certification Body (TCB)
Industry Canada – Certification Body, CAB Identifier – US0159
Europe – Notified Body (NB), NB Identifier - 2280
Japan – Recognized Certification Body (RCB), RCB Identifier - 210

2. DOCUMENT HISTORY

Draft History			
Master Draft Date	Addendum Draft	Date	Comments
13th April 2017	Conducted	13th April 2017	
	Radiated	13th April 2017	
	DFS	13th April 2017	

Released Document History			
Master Rev A Date	Addendum	Date	Comments
17th April 2017	Conducted	17th April 2017	Initial release
	Radiated	17th April 2017	Initial release
	DFS	17th April 2017	Initial release

In the above table the latest report revision will replace all earlier versions.

3. TEST RESULT CERTIFICATE

Manufacturer:	Actiontec Electronics Inc 760 N Mary Avenue Sunnyvale California 94085 USA	**Tested By:**	MiCOM Labs, Inc. 575 Boulder Court Pleasanton California 94566 USA
Model:	T3200BV, C2300A	**Telephone:**	+1 925 462 0304
Type of Equipment:	Bonded VDSL2/G fast Wireless AC Gateway Router	**Fax:**	+1 925 462 0306
S/N's:	GATT6280300064, GATT703040001 (DFS), GATT5490900014 (DFS)		
Test Date(s):	2nd – 15th February 2017 7th – 11th April 2017	**Website:**	www.micomlabs.com

STANDARD(S)	TEST RESULTS
FCC CFR 47 Part 15 Subpart E 15.407 (DFS Bands)	**EQUIPMENT COMPLIES**

MiCOM Labs, Inc. tested the equipment mentioned in accordance with the requirements set forth in the above standards. Test results indicate that the equipment tested is capable of demonstrating compliance with the requirements as documented within this report.

Notes:

1. This document reports conditions under which testing was conducted and the results of testing performed.

2. Details of test methods used have been recorded and kept on file by the laboratory.

3. Test results apply only to the item(s) tested.

ACCREDITED
TESTING CERT #2381.01

Approved & Released for MiCOM Labs, Inc. by:

Graeme Grieve
Quality Manager MiCOM Labs, Inc.

Gordon Hurst
President & CEO MiCOM Labs, Inc.

This test report may be reproduced in full only. The document may only be updated by MiCOM Labs personnel. All changes will be noted in the Document History section of the report.

4. REFERENCES AND MEASUREMENT UNCERTAINTY

4.1. Normative References

REF.	PUBLICATION	YEAR	TITLE
I	KDB 662911 D01 & D02	Oct 31 2013	Guidance for measurement of output emission of devices that employ single transmitter with multiple outputs or systems with multiple transmitters operating simultaneously in the same frequency band
II	KDB 905462 D07 v02	22nd August 2016	Test guidance to demonstrate compliance for U-NII devices subject to DFS requirements.
III	KDB 926956 D01 v02	22nd August 2016	U-NII Device Transition Plan
IV	KDB 789033 D02 v01r03	22nd August 2016	General UNII Test Procedures New Rules
V	A2LA	June 2015	R105 - Requirement's When Making Reference to A2LA Accreditation Status
VI	ANSI C63.10	2013	American National Standard for Testing Unlicensed Wireless Devices
VII	ANSI C63.4	2014	American National Standards for Methods of Measurement of Radio-Noise Emissions from Low-Voltage Electrical and Electronic Equipment in the Range of 9 kHz to 40 GHz
VIII	CISPR 22	2008	Information technology equipment - Radio disturbance characteristics - Limits and methods of measurement
IX	ETSI TR 100 028	2001-12	Parts 1 and 2 Electromagnetic compatibility and Radio Spectrum Matters (ERM); Uncertainties in the measurement of mobile radio equipment characteristics
X	FCC 06-96	Jun 30 2006	Memorandum Opinion and Order
XI	FCC 47 CFR Part 15.407	2016	Radio Frequency Devices; Subpart E –Unlicensed National Information Infrastructure Devices
XII	ICES-003	Issue 6 Jan 2016	Spectrum Management and Telecommunications; Interference-Causing Equipment Standard. Information Technology Equipment (Including Digital Apparatus) – Limits and methods of measurement.
XIII	M 3003	Edition 3 Nov.2012	Expression of Uncertainty and Confidence in Measurements
XIV	RSS-247 Issue 1	May 2015	Digital Transmission Systems (DTSs), Frequency Hopping System (FHSs) and License-Exempt Local Area Network (LE-LEN) Devices
XV	RSS-Gen Issue 4	November 2014	General Requirements and Information for the Certification of Radiocommunication Equipment
XVI	KDB 644545 D03 v01	August 14th 2014	Guidance for IEEE 802.11ac New Rules
XVII	FCC 47 CFR Part 2.1033	2016	FCC requirements and rules regarding photographs and test setup diagrams.

This test report may be reproduced in full only. The document may only be updated by MiCOM Labs personnel. All changes will be noted in the Document History section of the report.

4.2. Test and Uncertainty Procedure

Conducted and radiated emission measurements were conducted in accordance with American National Standards Institute ANSI C63.4, listed in the Normative References section of this report.

Measurement uncertainty figures are calculated in accordance with ETSI TR 100 028 Parts 1 and 2.

Measurement uncertainties stated are based on a standard uncertainty multiplied by a coverage factor k = 2, providing a level of confidence of approximately 95 % in accordance with UKAS document M 3003 listed in the Normative References section of this report.

This test report may be reproduced in full only. The document may only be updated by MiCOM Labs personnel. All changes will be noted in the Document History section of the report.

5. PRODUCT DETAILS AND TEST CONFIGURATIONS

5.1. Technical Details

Details	Description
Purpose:	Test of the Actiontec Electronics Inc Actiontec T3200BV, C2300A to FCC CFR 47 Part 15 Subpart E 15.407 (DFS Bands). Radio Frequency Devices; Subpart E –Unlicensed National Information Infrastructure Devices
Applicant:	Actiontec Electronics Inc 760 N Mary Avenue Sunnyvale California 94085 USA
Manufacturer:	Actiontec Electronics Inc
Laboratory performing the tests:	MiCOM Labs, Inc. 575 Boulder Court Pleasanton California 94566 USA
Test report reference number:	ATEC23-U10_Master
Date EUT received:	2nd February 2017
Standard(s) applied:	FCC CFR 47 Part 15 Subpart E 15.407
Dates of test (from - to):	2nd – 15th February 2017 7th – 11th April 2017
No of Units Tested:	3
Product Family Name:	Bonded VDSL2/G.fast Wireless AC Gateway Router
Model(s):	T3200BV, C2300A, Note: The T3200BV was tested in this program.
Location for use:	Indoors
Declared Frequency Range(s):	5250 - 5350 MHz; 5470 - 5725 MHz.
Type of Modulation:	OFDM
EUT Modes of Operation:	802.11a; 802.11n HT-20; 802.11n HT-40; 802.11ac-80;
Declared Nominal Output Power:	24 dBm
Transmit/Receive Operation:	Transceiver – Half duplex
Rated Input Voltage and Current:	AC/ DC adaptor (adaptor sold with unit) 12Vdc – 3.0 A
Operating Temperature Range:	Declared Range 0°C to 40°C
ITU Emission Designator:	802.11a: 16M8D1D 802.11n HT-20: 18M1D1D 802.11n HT-40: 36M7D1D 802.11n AC-80: 75M7D1D
Equipment Dimensions:	2.25 X 9.5 X 7.25 in
Weight:	0.95 lb.
Hardware Rev:	AM1
Software Rev:	CAS001-31.165L.1C (RF Testing) CAS001-31.165L.1C-F (DFS)

This test report may be reproduced in full only. The document may only be updated by MiCOM Labs personnel. All changes will be noted in the Document History section of the report.

5.2. Scope Of Test Program

Actiontec Electronics Inc T3200BV, C2300A

The scope of the test program was to test the Actiontec Electronics Inc T3200BV, C2300A, Bonded VDSL2/G fast Wireless AC Gateway Router configurations in the frequency ranges 5250 - 5350 MHz; 5470 - 5725 MHz for compliance against the following specification:

FCC CFR 47 Part 15 Subpart E 15.407
Radio Frequency Devices; Subpart E – Unlicensed National Information Infrastructure Devices

EUT is labelled C2150A, however that is customer assigned model number. ActionTec Electronics Inc. declares Model Number is T3200BV.

Actiontec Electronics IncT3200BV, C2300A

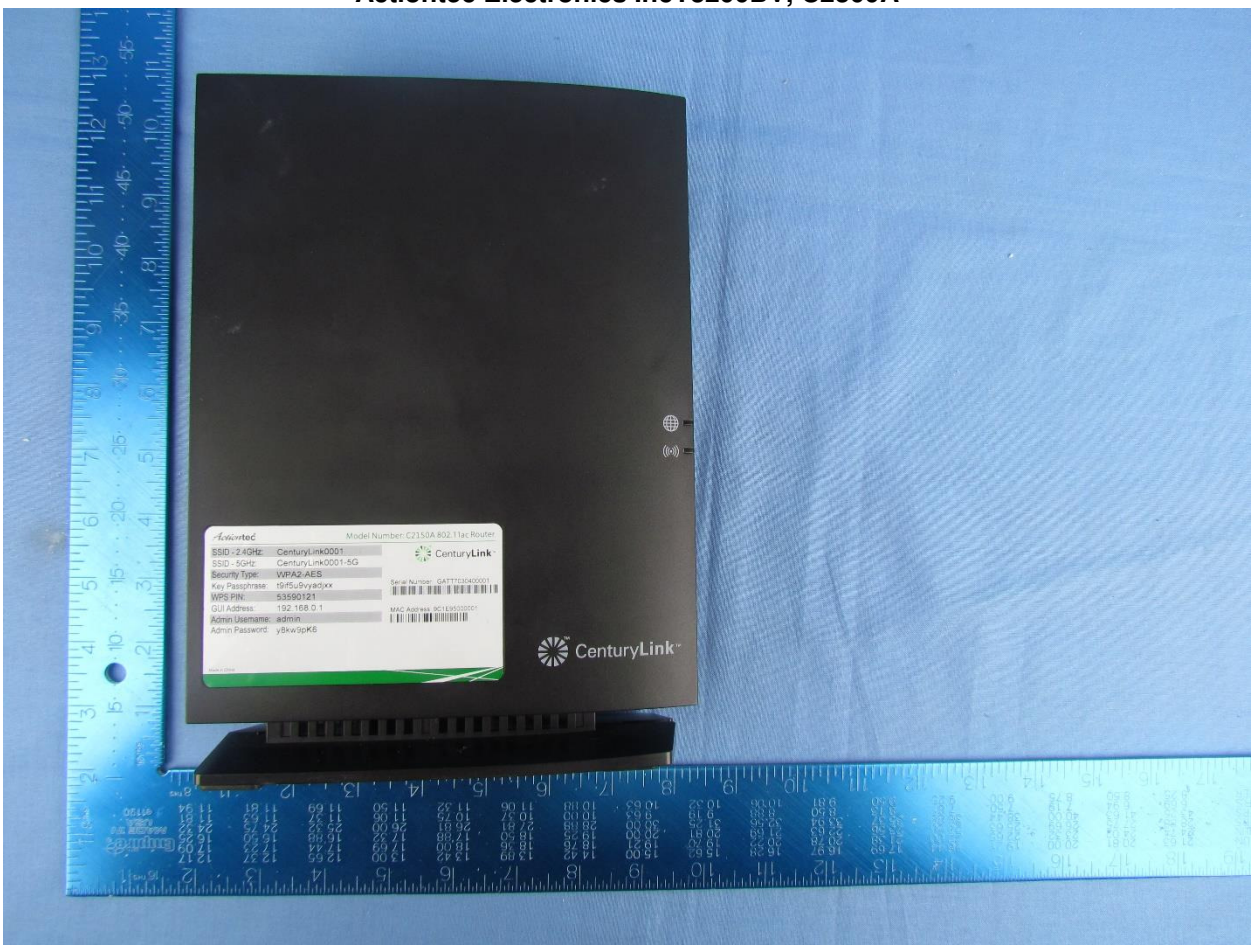

5.3. Equipment Model(s) and Serial Number(s)

Type	Description	Manufacturer	Model	Serial no.	Delivery Date
EUT	Wireless 11ac Bonded VDSL2	ActionTec Electronics Inc.	T3200BV	GATT6280300064	2nd February 2017
EUT	Wireless 11ac Bonded VDSL2	ActionTec Electronics Inc.	T3200BV	GATT703040001	2nd February 2017
EUT	Wireless 11ac Bonded VDSL2	ActionTec Electronics Inc.	T3200BV	GATT5490900014	7th April 2017
Support Equipment	12vdc 3A ACDC adapter	ActionTec Electronics Inc.	CDS036-W120U	55206925	2nd February 2017
Support Equipment	12vdc 3A ACDC adapter	ActionTec Electronics Inc.	CDS036-W120U	55202055	2nd February 2017

5.4. Antenna Details

Type	Manufacturer	Model	Family	Gain (dBi)	Dir BW	X-Pol	Frequency Band (MHz)
integral	Galtronic	HB	Stamp	5.7	360	-	5150 - 5250 5250 - 5350
integral	Galtronic	HB	Stamp	5.6	360	-	5470 - 5725 5725 - 5850
integral	Galtronic	LB	Stamp	2.7	360	-	2400 - 2483.5

5.5. Cabling and I/O Ports

Port Type	Max Cable Length	# Of Ports	Screened	Conn Type	Data Type
Ethernet LAN	100m	4	N	RJ-45	Packet Data
Ethernet WLAN	100m	1	N	RJ-45	Packet Data
USB 3.0	15m	2	Y	USB	Data
RJ14	-	1	N	RJ14	-
RJ11	-	2	N	RJ11	Analog
SFP	-	1	N	SFP	Fiber

This test report may be reproduced in full only. The document may only be updated by MiCOM Labs personnel. All changes will be noted in the Document History section of the report.

5.6. Test Configurations

Results for the following configurations are provided in this report:

Operational Mode(s) (802.11a/b/g/n/ac)	Data Rate with Highest Power MBit/s	Channel Frequency (MHz)		
		Low	Mid	High
5250 - 5350 MHz				
802.11a	6.00	5260.00	5300.00	5320.00
802.11ac-80	29.30	--	--	5290.00
802.11n HT-20	6.50	5260.00	5300.00	5320.00
802.11n HT-40	13.50	5270.00	--	5310.00
5470 - 5725 MHz				
802.11a	6.00	5500.00	5580.00	5720.00
802.11ac-80	29.30	5530.00	5610.00	5690.00
802.11n HT-20	6.50	5500.00	5580.00	5720.00
802.11n HT-40	13.50	5510.00	5550.00	5710.00

5.7. Equipment Modifications

The following modifications were required to bring the equipment into compliance:

1. Software updated from CA S001-31.165L.1C to CA S001-31.165L-1C-F in order to pass Probability of Detection (ATEC23-U10_DFS section 4.1.4) and Channel Close / Transmission Time (ATEC23-U10_DFS section 4.1.2) DFS tests.

5.8. Deviations from the Test Standard

The following deviations from the test standard were required in order to complete the test program:
1. NONE

This test report may be reproduced in full only. The document may only be updated by MiCOM Labs personnel. All changes will be noted in the Document History section of the report.

6. TEST SUMMARY

List of Measurements

Test Header	Result	Comments
Conducted Testing	See Report ATEC23-U10_Conducted	
(a) Peak Transmit Power	Complies	
(a) 26 dB & 99% Bandwidth	Complies	
(a)(5) Power Spectral Density	Complies	
Radiated Testing	See Report ATEC23-U10_Radiated	
(b)(2) Radiated Spurious & Band-Edge Emissions	Complies	
DFS Testing	See Report ATEC23-U10_DFS	
(h)(2) Dynamic Frequency Selection (DFS)	Complies	
(ii) Channel Availability Check	Complies	
(a) Initial CAC	Complies	
(b) Beginning CAC	Complies	
(c) End CAC	Complies	
(iii) Channel Close / Transmission Time	Complies	
(iv) Non-Occupancy Period	Complies	
Probability of Detection	Complies	
Detection Bandwidth	Complies	
Digital Emissions	See Report ATEC23-U2 Part 15B & ICES-003	
15.209 Digital Emissions	Complies	15.209 Digital Emissions
AC Wireline Emissions	See Report ATEC23-U2 Part 15B & ICES-003	
15.207 AC Wireline Emissions	Complies	15.207 AC Wireline Emissions

This test report may be reproduced in full only. The document may only be updated by MiCOM Labs personnel. All changes will be noted in the Document History section of the report.

7. TEST EQUIPMENT CONFIGURATION(S)

7.1. Conducted RF Emission Test Set-up(s)

The following tests were performed using the conducted test set-up shown in the diagram below;
1. Peak Transmit Power
2. 26 dB & 99% Bandwidth
3. Power Spectral Density

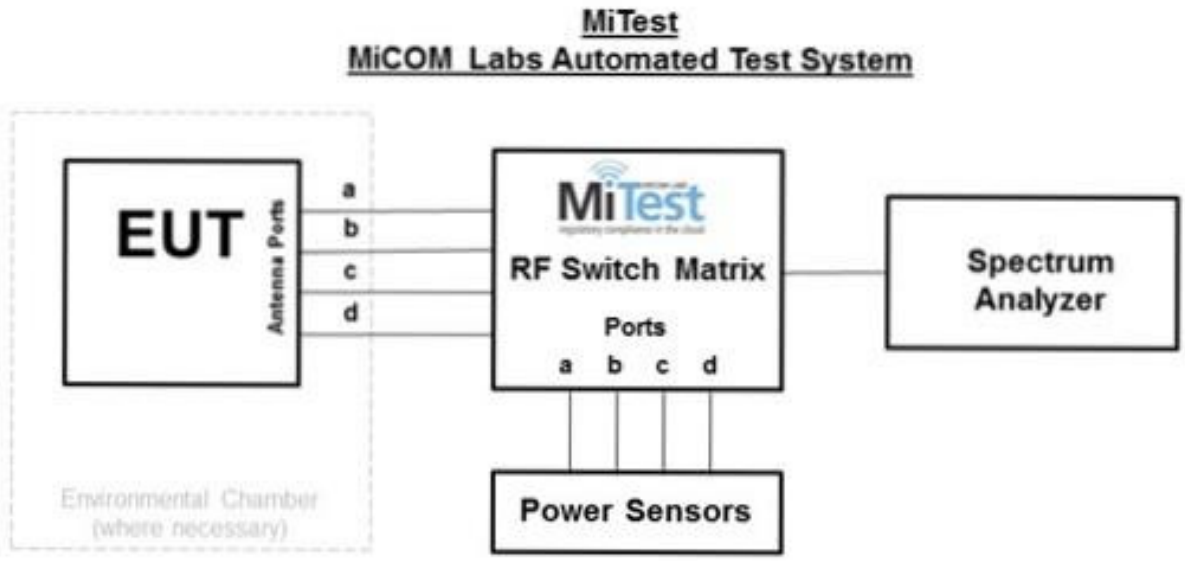

Conducted Test Measurement Setup

A full system calibration was performed on the test station and any resulting system losses (or gains) were taken into account in the production of all final measurement data.

Asset#	Description	Manufacturer	Model#	Serial#	Calibration Due Date
127	Power Supply	HP	6674A	US36370530	Cal when used
158	Barometer/Thermometer	Control Company	4196	E2846	30 Nov 2017
248	Resistance Thermometer	Thermotronics	GR2105-02	9340 #1	21 Oct 2017
376	USB 10MHz - 18GHz Average Power Sensor	Agilent	U2000A	MY51440005	23 Oct 2017
378	Rohde & Schwarz 40 GHz Receiver with Generator	Rhode & Schwarz	ESIB40	100107/040	4 Aug 2017
381	4x4 RF Switch Box	MiCOM Labs	MiTest RF Switch Box	MIC002	2 Jun 2017
398	Test Software	MiCOM	MiTest ATS	Version 4.1.0.76	Not Required
419	Laptop with Labview Software	Lenova	W520	TS02	Not Required
420	USB to GPIB Interface	National Instruments	GPIB-USB HS	1346738	Not Required
440	USB Wideband Power Sensor	Boonton	55006	9178	25 Sep 2017
442	USB Wideband Power Sensor	Boonton	55006	9181	6 Oct 2017
460	Dell Computer with installation of MiTest executable.	Dell	Optiplex330	BC944G1	Not Required
493	USB Wideband Power Sensor	Boonton	55006	9634	10 Mar 2018
494	USB Wideband Power Sensor	Boonton	55006	9726	10 Mar 2018
74	Environmental Chamber Chamber 3	Tenney	TTC	12808-1	29 Sep 2017
RF#2 GPIB#1	GPIB cable to Power Supply	HP	GPIB	None	Not Required
RF#2 SMA#1	EUT to Mitest box port 1	Flexco	SMA Cable port1	None	2 Jun 2017
RF#2 SMA#2	EUT to Mitest box port 2	Flexco	SMA Cable port2	None	2 Jun 2017
RF#2 SMA#3	EUT to Mitest box port 3	Flexco	SMA Cable port3	None	2 Jun 2017
RF#2 SMA#4	EUT to Mitest box port 4	Flexco	SMA Cable port4	None	2 Jun 2017
RF#2 SMA#SA	Mitest box to SA	Flexco	SMA Cable SA	None	2 Jun 2017
RF#2 USB#1	USB Cable to Mitest Box	Dynex	USB Cable	None	Not Required

This test report may be reproduced in full only. The document may only be updated by MiCOM Labs personnel. All changes will be noted in the Document History section of the report.

7.2. Radiated Spurious Emission Test Set-up > 1 GHz

The following tests were performed using the radiated test set-up shown in the diagram below.

Radiated Spurious and Band-edge Emissions

Radiated Emission Measurement Setup

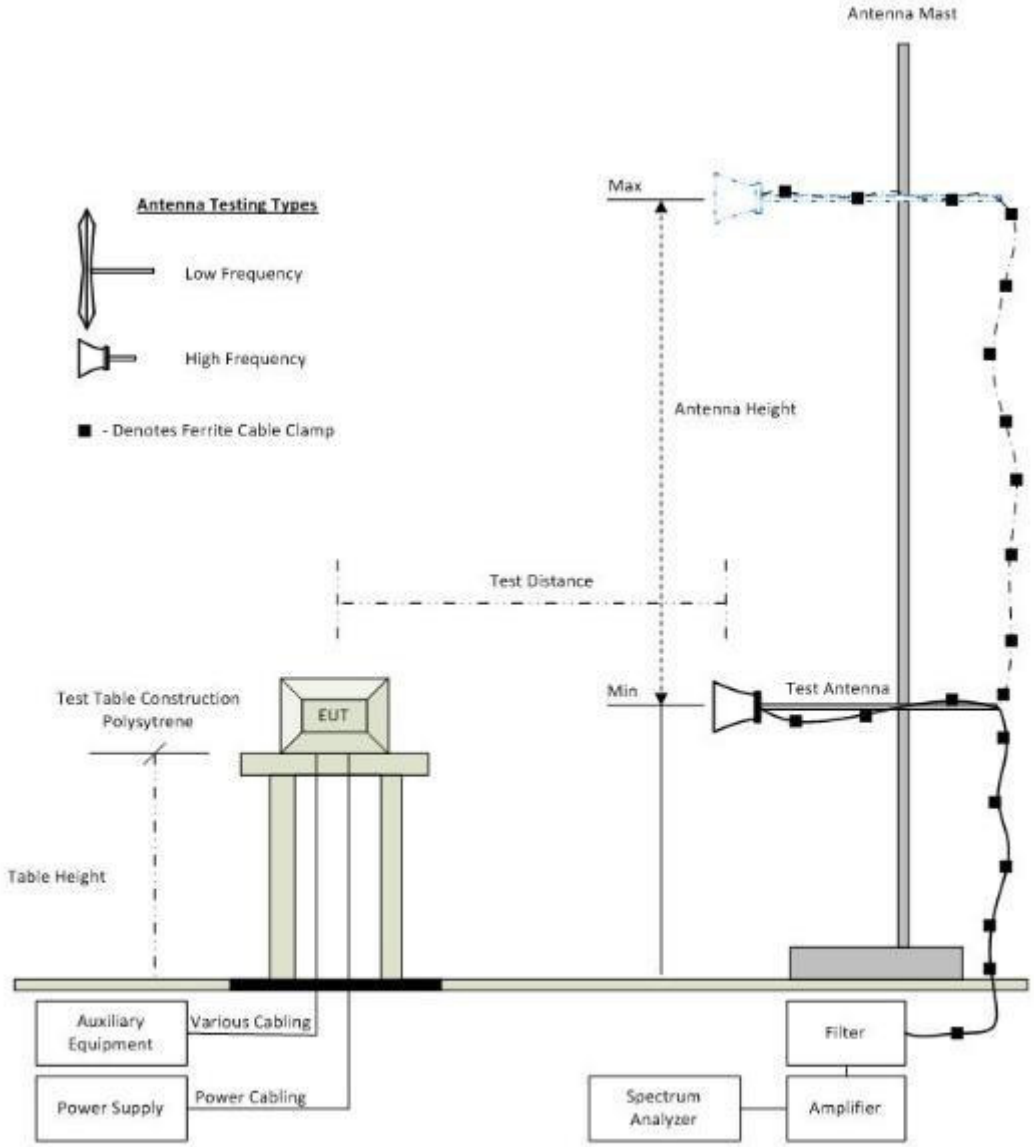

Radiated Emission Test Setup

Asset#	Description	Manufacturer	Model#	Serial#	Calibration Due Date
158	Barometer/Thermometer	Control Company	4196	E2846	30 Nov 2017
170	Video System Controller for Semi Anechoic Chamber	Panasonic	WV-CU101	04R08507	Not Required
287	Rohde & Schwarz 40 GHz Receiver	Rhode & Schwarz	ESIB40	100201	2 May 2017
301	5470 to 5725 MHz Notch Filter	Microtronics	RBC50704	001	16 Aug 2017
302	5150 to 5350 MHz Notch Filter	Microtronics	BRC50703	002	16 Aug 2017
303	5725 to 5875 MHz Notch filter	Microtronics	BRC50705	003	16 Aug 2017
330	Variac 0-280 Vac	Staco Energy Co	3PN1020B	0546	Cal when used
336	Active loop Ant 10kHz to 30 MHz	EMCO	EMCO 6502	00060498	26 Sep 2017
338	Sunol 30 to 3000 MHz Antenna	Sunol	JB3	A052907	15 Aug 2017
341	900MHz Notch Filter	EWT	EWT-14-0199	H1	16 Aug 2017
342	2.4 GHz Notch Filter	EWT	EWT-14-0203	H1	16 Aug 2017
343	5.15 GHz Notch Filter	EWT	EWT-14-0200	H1	16 Aug 2017
344	5.35 GHz Notch Filter	EWT	EWT-14-0201	H1	16 Aug 2017
345	5.46 GHz Notch Filter	EWT	EWT-14-0202	H1	16 Aug 2017
346	1.6 TO 10GHz High Pass Filter	EWT	EWT-57-0112	H1	16 Aug 2017
373	26III RMS Multimeter	Fluke	Fluke 26 series III	76080720	26 Oct 2017
377	Band Rejection Filter 5150 to 5880MHz	Microtronics	BRM50716	034	16 Aug 2017
378	Rohde & Schwarz 40 GHz Receiver with Generator	Rhode & Schwarz	ESIB40	100107/040	4 Aug 2017
393	DC - 1050 MHz Low Pass Filter	Microcircuits	VLFX-1050	N/A	16 Aug 2017
396	2.4 GHz Notch Filter	Microtronics	BRM50701	001	16 Aug 2017
397	Amp 10 - 2500MHz	MiCOM Labs	Amp 10 - 2500 MHz	NA	9 Jun 2017
399	ETS 1-18 GHz Horn Antenna	ETS	3117	00154575	10 Jul 2017
406	Amplifier for Radiated Emissions	MiCOM Labs	40dB 1 to 18GHz Amp	0406	9 Jun 2017
410	Desktop Computer	Dell	Inspiron 620	WS38	Not Required
411	Mast/Turntable Controller	Sunol Sciences	SC98V	060199-1D	Not Required

This test report may be reproduced in full only. The document may only be updated by MiCOM Labs personnel. All changes will be noted in the Document History section of the report.

412	USB to GPIB Interface	National Instruments	GPIB-USB HS	11B8DC2	Not Required
413	Mast Controller	Sunol Science	TWR95-4	030801-3	Not Required
414	DC Power Supply 0-60V	HP	6274	1029A01285	Cal when used
415	Turntable Controller	Sunol Sciences	Turntable Controller	None	Not Required
416	Gigabit ethernet filter	ETS-Lingren	Gigafoil 260366	None	Not Required
447	Rad Emissions Test Software	MiCOM	Rad Emissions Test Software Version 1.0.109	447	Not Required
462	Schwarzbeck cable from Antenna to Amplifier.	Schwarzbeck	AK 9513	462	31 May 2017
463	Schwarzbeck cable from Amplifier to Bulkhead.	Schwarzbeck	AK 9513	463	31 May 2017
464	Schwarzbeck cable from Bulkhead to Receiver	Schwarzbeck	AK 9513	464	31 May 2017
465	Low Pass Filter DC-1000 MHz	Mini-Circuits	NLP-1200+	VUU01901402	2 Jun 2017
466	Low Pass Filter DC-1500 MHz	Mini-Circuits	NLP-1750+	VUU10401438	2 Jun 2017
467	2495 to 2650 MHz notch filter	MicroTronics	BRM50709	011	16 Aug 2017
468	Low pass filter	Mini Circuits	SLP-550	None	16 Aug 2017
469	Low pass filter	Mini Circuit	SLP-1000	None	16 Aug 2017
470	High Pass filter	Mini Circuits	SHP-700	None	16 Aug 2017
476	Low Pass dc-2200MHz filter	Mini Circuits	15542 NLP-2400+	VUU13801345	16 Aug 2017
480	Cable - Bulkhead to Amp	SRC Haverhill	157-157-3050360	480	2 Jun 2017
481	Cable - Bulkhead to Receiver	SRC Haverhill	151-151-3050787	481	2 Jun 2017
482	Cable - Amp to Antenna	SRC Haverhill	157-157-3051574	482	2 Jun 2017
502	Test Software for Radiated Emissions	EMISoft	Vasona	Version 5 Build 59	Not Required
87	Uninterruptible Power Supply	Falcon Electric	ED2000-1/2LC	F3471 02/01	Cal when used
VLF-1700	Low pass filter DC-1700 MHz	Mini Circuits	VLF-1700	None	31 May 2017

This test report may be reproduced in full only. The document may only be updated by MiCOM Labs personnel. All changes will be noted in the Document History section of the report.

7.3. DFS - Conducted

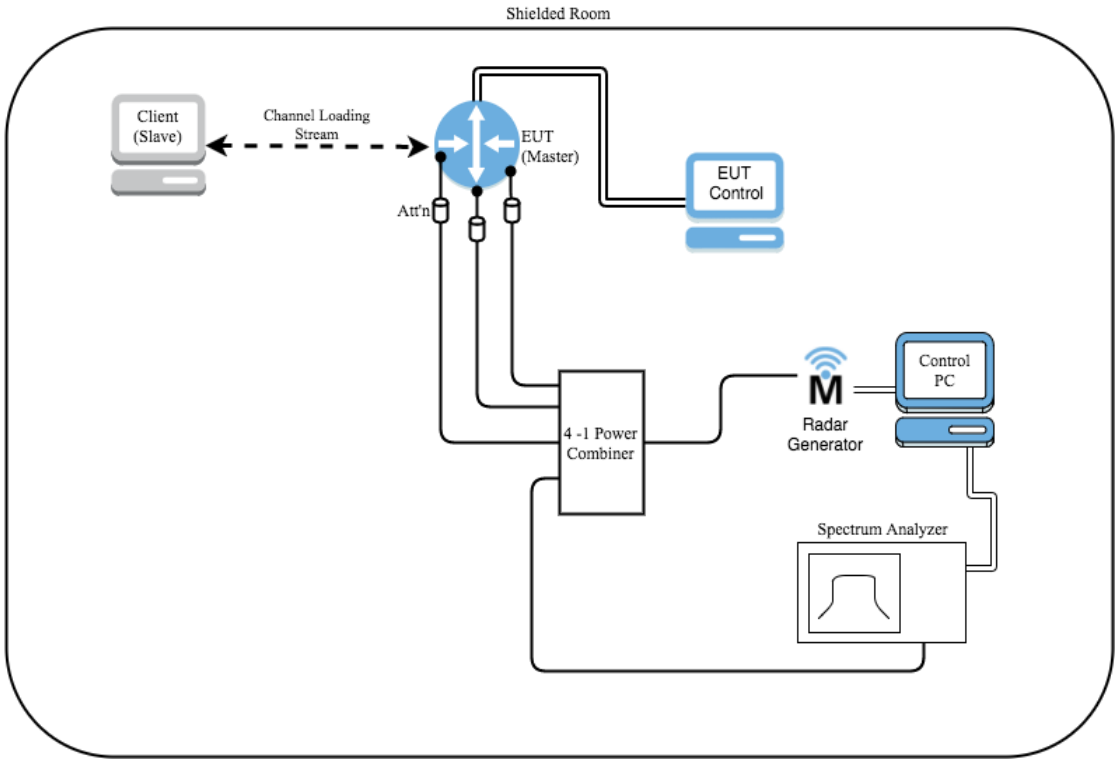

A full system calibration was performed on the test station and any resulting system losses (or gains) were taken into account in the production of all final measurement data.

Asset#	Description	Manufacturer	Model#	Serial#	Calibration Due Date
158	Barometer/Thermometer	Control Company	4196	E2846	30 Nov 2017
193	Receiver 20 Hz to 7 GHz	Rhode & Schwarz	ESI 7	838496/007	10 Oct 2017
299	Test Software DFS Test System	Aeroflex	DFS test Software	V2.7.0	Not Required
359	DFS System	Aeroflex	PXI-1042	300001/004	10 Jul 2017
417	Laptop for DFS with DFS software	Lenova	W520	DFS	Not Required
418	PCI-e interface card	National Instruments	Express 8360	174AAC5	Not Required
422	Splitter/Combiner	Pasternack	PE 2031	001	Cal when used
495	RF Power Divider	Micon Precise Corp	91002	495	Cal when used
71	Spectrum Analyzer 9KHz-50GHz	HP	8565E	3425A00181	6 Aug 2017
DFS PCIe#1	PCIe cable for Aeroflex	National Instruments	PCIe cable	None	Not Required
DFS SMA#1	SMA Cable for DFS	Megaphase	SMA Cable	None	Cal when used
DFS SMA#2	SMA Cable for DFS	Megaphase	SMA Cable	None	Cal when used
DFS SMA#3	SMA Cable for DFS	Megaphase	SMA Cable	None	Cal when used

This test report may be reproduced in full only. The document may only be updated by MiCOM Labs personnel. All changes will be noted in the Document History section of the report.

8. MEASUREMENT AND PRESENTATION OF TEST DATA

The measurement and graphical data presented in this test report was generated automatically using state-of-the-art technology creating an easy to read report structure. Numerical measurement data is separated from supporting graphical data (plots) through hyperlinks. Numerical measurement data can be reviewed without scrolling through numerous graphical pages to arrive at the next data matrix.

Plots have been relegated into the Appendix 'Graphical Data'.

Test and report automation was performed by MiTest. MiTest is an automated test system developed by MiCOM Labs. MiTest is the first cloud based modular test system enabling end-to-end automation of regulatory compliance testing for conducted RF testing.

The MiCOM Labs "MiTest" Automated Test System" (Patent Pending)

9. ADDENDUM – DECLARATION OF SIMILARITIES (DoS)

Actiontec Electronics, Inc.
760 North Mary Avenue • Sunnyvale • CA • 94085 • USA
Phone (408) 752-7700 • Fax (408) 541-9003 • www.actiontec.com

Declaration of Similarity

Date: February 1, 2017

To Whom It May Concern,

We, Actiontec Electronics, Inc., hereby to declare that product: Bonded VDSL2/G.fast Wireless AC Gateway Router, Model: C2300A is electrically identical with the same electromagnetic emissions and electromagnetic compatibility characteristics as Model: T3200BV which has been tested at MiCOM Labs. for FCC CFR47 Part 15B/IC ICES-003 under Test Report No.: ATEC23-U2.

The purpose is to clarify specifically for one large customer versus generic consumer products due to marketing reason.

Please contact me should there be need for any additional clarification or information.

Best Regards,

Angela Yao / Sr. Program Manager
Actiontec Electronics, Inc.
760 North Mary Ave.,
Sunnyvale, CA 94085
Phone: (408) 752-7700
Email: ayao@actiontec.com

Solutions for the Digital Life™

575 Boulder Court
Pleasanton, California 94566, USA
Tel: +1 (925) 462 0304
Fax: +1 (925) 462 0306
www.micomlabs.com