MOTOROLA

ACCREDITED
Certificate Number: 1449-01

# FCC ID: LO6-DVRS700
# DECLARATION OF COMPLIANCE MPE ASSESSMENT

**Government & Enterprise Mobility Solutions**
**EME Test Laboratory**
**8000 West Sunrise Blvd**
**Fort Lauderdale, FL. 33322**

**Date of Report:** December 1, 2005
**Report Revision:** Rev. A
**Report ID:** FCC MPE rpt_DVRS_700/VHF Rev A_051201_SR2966

**Responsible Engineer:** Stephen Whalen (SR Staff EME Eng.)
**Date/s Tested:** 10/18, 10/21, 11/2-11/7, 11/9, 11/10, 11/11
**Manufacturer/Location:** Futurecom Systems Group Inc., Concord, Ontario, Canada
**Date submitted for test:** 8/1/05 (DVR)
**DUT Description:** 700MHz 5W DVRS
**Test TX mode(s):** CW
**Max. Power output:** 5W, 100% Duty Cycle
**TX Frequency Bands:** 764 -776MHz and 794-806MHz
**Signaling type:** FM; APCO 25
**Model(s) Tested:** DQPMDVR7000P
**Model(s) Certified:** DQPMDVR7000P
**Serial Number(s):** 05060955
**Classification:** Occupational Controlled (Operator); General Population/Uncontrolled (Passengers/Bystanders)
**Rule Part(s):** 2.1091 (d)

**Approved Accessories:**
**Antenna(s):**
HAF4016A (764-870MHz ¼ wave trunk mount antenna; 0dBd gain)

**Companion Mobiles and Antennas:**

| FCC ID | Mobile Description | Antenna(s) |
|---|---|---|
| AZ492FT3806 | Motorola XTL5000 Model M20KSS9PW1AN, VHF 147-174MHz Mobile, Transmit conducted power up to 57W, 50% transmit duty cycle. | HAD4007A (144-150.8MHz; ¼ wave Roof mount; 0dBd gain); HAD4008A (150.8-162MHz; ¼ wave Roof mount; 0dBd gain); HAD4009A (162-174MHz; ¼ wave Roof mount; 0dBd gain); |
| AZ492FT3808 | Motorola XTL5000 Model M20KTS9PW1AN, VHF 147-174MHz Mobile, Transmit conducted power up to 57W, 50% transmit duty cycle. | HAD4007A (144-150.8MHz; ¼ wave Roof mount; 0dBd gain); HAD4008A (150.8-162MHz; ¼ wave Roof mount; 0dBd gain); HAD4009A (162-174MHz; ¼ wave Roof mount; 0dBd gain); |

## Final RF Exposure Results:
## Combined DVR and VHF Mobile max calculated power density % of limit = 91.3%

**Based on the information and the testing results provided herein, the undersigned certifies that when used as stated in the operating instructions supplied, said product complies with the national and international reference standards and guidelines listed in section 3.0 of this report. This report shall not be reproduced without written approval from an officially designated representative of the Motorola EME Laboratory.**

Signature on file
Ken Enger GEMS EME Lab Senior Resource Manager,
Laboratory Director,

**Approval Date:** 12/01/05

**Certification Date:**

**Certification No.:**

# TABLE OF CONTENTS

1.0 Product and System Description
2.0 Additional Options and Accessories
3.0 Measurement and Limit Standards
4.0 Data Collection Consideration
5.0 Measurement System Uncertainty Levels
6.0 Method of Measurement
6.1 DVR 700MHz EME measurements made with trunk mounted antenna
6.1.1 External vehicle EME measurement
6.1.2 Internal vehicle EME measurement
6.2 Mobile VHF EME measurements made with roof mounted antenna
6.2.1 External vehicle EME measurements
6.2.2 Internal vehicle EME measurement
7.0 Test Site
8.0 Measurement System/Equipment
9.0 Test Unit Description
10.0 Test Set-Up Description
11.0 Test Results Summary
12.0 Conclusion

APPENDIX A: Illustration of antenna location and test distances
APPENDIX B: Block diagram of MPE test configuration
APPENDIX C: Meter/Probe Calibration Certificates
APPENDIX D: Photos of Assessed Antennas
APPENDIX E: Tables of raw measurement grid test results

# REVISION HISTORY

| Date | Revision | Comments |
|---|---|---|
| 11/14/05 | O | Original release |
| 12/01/05 | A | Added notes 3 and 4 in Appendix A |

## 1.0 Product and System Description

FCC ID: LO6-DVRS700 is a MOBEXCOM Digital Vehicular Repeater (DVR) manufactured by FUTURECOM Systems Group. The DVR, in addition to standalone operation, is capable of interfacing to a companion mobile radio using serial data protocol for audio and control. The full duplex DVR provides local area coverage for portable to portable communication in the 700MHz band while the companion mobile radio provides wide-area coverage extension.

The system can operate in the following modes: Mobile mode - where the vehicular repeat function is off but receives emergency and mode change commands from portable devices; Local mode - with portable to portable repeat and network monitoring capabilities; and System mode - with portable to portable repeat functions with full network interconnect. Furthermore, the DVRS offers a busy lockout feature where a simulcast prevention algorithm is used for seamless multi-vehicle operation on the same channel. Moreover, the system supports emergency calls in the MDC1200 signaling format. Other system features include field programmability, seamless interface to a mobile radio through the control head bus, controllability via a mobile radio control head, as well as remotely by a dispatcher or portable user. The DVR supports up to 64 channels and 255 talk groups, MDC1200, DTMF, EIA, CCIR signaling as well as PL and DPL. The DVR supports programmability of leading and/or trailing tones, and audio and TX priorities per mode as well as talk group steering.

This test report covers the RF Exposure performance of the 700MHz 5 watts DVR interfaced with, and transmitting simultaneously with, either companion VHF mobile radios with transmit powers up to 57 watts and with both units, installed in a typical vehicle.

The DVR transmit frequency ranges are 764-776MHz (talk around) and 794-806MHz (repeater) at transmit duty cycle up to 100%. The VHF mobile transmit frequency range is 147-174MHz at transmit duty cycle up to 50%. The DVR antenna is limited to ¼ λ (0dBd gain) mounted at the center of the trunk, and the VHF mobile antennas are limited to ¼ λ (0dBd gain) mounted at the center of the roof. The DVR system incorporates a duplexer with 2.0dB insertion loss inserted between the output of the DVR and the trunk mounted antenna; therefore the maximum conducted power delivered to the antenna is 5 watts.

This device will be marketed to and used by employees solely for work-related operations, such as public safety agencies, e.g. police, fire and emergency medical. User training is the responsibility of these agencies which can be expected to employ the usage instructions, safety information and operational cautions set forth in the user's manual, instructional sessions or other means.

Accordingly this product is classified as Occupational/Controlled Exposure. However, In accordance with FCC requirements, the passengers inside the vehicle and the bystanders external to the vehicle are evaluated to the General Population/Uncontrolled Exposure Limits.

(Note that “By-standers” as used herein mean people other than operator)

## 2.0 Additional Options and Accessories:

NA

## 3.0 Measurement and Limit Standards

Measurements were performed according to FCC Limits Per 47 CFR 2.1091 (d) for General Population/Uncontrolled RF Exposure as well as with the recommended guidelines in IEEE/ANSI C95.1-1999.

For test frequencies ranging from 147-174 MHz the MPE (Maximum Permissible Exposure) limit to electromagnetic energy in equivalent plane wave free-space power density is 0.20mW/cm$^2$. For test frequencies ranging from 764-806MHz the MPE limit is calculated using the formula f/1500.

## 4.0 Data Collection Consideration

Power density testing was performed with DUT installed in a 1991 Ford Taurus (4-door). Measurement data was taken with the vehicle running at idle and the vehicle battery measuring 14.0 volts.

## 5.0 Measurement System Uncertainty Levels

The information below presents an estimate of the possible errors that are associated with the measurement system.

Uncertainty Budget for Near Field Probe Measurements

| | **Tol. (± %)** | **Prob. Dist.** | **Divisor** | **$u_i$ (±%)** | |
|---|---|---|---|---|---|
| **Measurement System** | | | | | |
| Survey Meter Calibration | 3.0 | N | 1.00 | 3.0 | ∞ |
| Repeatability Accuracy | 7.0 | N | 1.00 | 7.0 | ∞ |
| **Combined Standard Uncertainty** | | RSS | | 7.6 | ∞ |
| **Expanded Uncertainty** | | $k$=2 | | 15 | |

## 6.0 Method of Measurement

MPE measurements were conducted for each transmitter individually per the procedures described in the following sections. Percent of Limit was calculated for each transmitter individually for each position. Final results representing the maximum combined exposure of DVR and each mobile radio were obtained by summing the highest percent of limit results from each transmitter.

## 6.1 DVR 700MHz EME measurements made with trunk mounted antenna(s)

(For reference, see Illustration of antenna location and test distances in APPENDIX A)

### 6.1.1 External vehicle EME measurement

(Antenna mounted at trunk center)

MPE measurements for by-stander conditions are determined by taking the average of (10) measurements in a 2m vertical line for each of the (5) test positions indicated in APPENDIX A with 20cm increments at the test distance of 90cm from the test vehicle's body. The measurement probe sensor is rotated 180º at each of the ten incremental measurements to ensure the highest result is captured. These measurements are representative of persons other than the operator standing next to the vehicle.
The DVR antenna mounted at the center of the trunk was assessed across the TX band for the (5) by-stander conditions presented in APPENDIX A.

### 6.1.2 Internal vehicle EME measurement

(Antenna mounted at trunk center)

While rotating survey meter probe through 180 degrees to ensure that the highest level is found, scans were performed inside of the vehicle, at both front and back seating areas, across the TX band to ascertain the highest level at the head. After the highest level is found, scans were performed vertically making two (2) additional measurements within an area approximately 40cm wide (representing the width of a person) so as to have a total of three (3) measured points, indicated below, that are averaged.

a) Head area

b) Chest area

c) Lower Trunk area

## 6.2 Mobile VHF EME measurements made with roof mounted antenna(s)

(For reference, see Illustration of antenna location and test distances in APPENDIX A).

### 6.2.1 External vehicle EME measurement

(Antenna mounted at roof center)

MPE measurements for by-stander conditions are determined by taking the average of (10) measurements in a 2m vertical line for each of the (5) test positions indicated in APPENDIX A with 20cm increments at the test distance of 90cm from the test vehicle's body. The measurement probe sensor is rotated 180º at each of the ten incremental measurements to ensure the highest result is captured. These measurements are representative of persons other than the operator standing next to the vehicle.
The Mobile VHF antenna mounted at the center of the roof was assessed across the TX band for the (5) by-stander conditions presented in APPENDIX A.

### 6.2.2 Internal vehicle EME measurement
(Antenna mounted at roof center)

While rotating survey meter probe through 180 degrees to ensure that the highest level is found, scans were performed inside of the vehicle, both at the front and back seating areas, across the TX band to ascertain the highest level in each location. After the highest level is found, two (2) additional measurements were performed vertically within an area approximately 40cm wide (representing the width of a person) so as to have a total of three (3) measured points as indicated below that are averaged.

a) Head area

b) Chest area

c) Lower Trunk area

## 7.0 Test Site

The test site is the Motorola open area test site located at 8000 W. Sunrise Blvd., Plantation, FL. 33322.

## 8.0 Measurement System/Equipment

| Equipment Type | Model # | SN | Calibration Due Date |
|---|---|---|---|
| Automobile | 1991 Ford Taurus, 4-Door | | |
| | | | |
| Survey Meter | NARDA Model 8718 | 01108 | 5/17/06 |
| Survey Meter | NARDA Model 8718 | 01122 | 3/02/06 |
| | | | |
| Probe - E-Field (Electric Field) | NARDA Model 8722B | 13001 | 7/21/06 |
| | | | |
| Probe - H-Field (Magnetic Field) | NARDA Model 8731 | 03006 | 5/12/06 |
| Probe - H-Field (Magnetic Field) | NARDA Model 8732 | 06007 | 6/28/06 |

## 9.0 Test Unit Description

Power density measurements were performed on a representative sample of the DVR with serial number 05060955. The test frequencies were 764, 770, 776, 794, 800, and 806 MHz.

Power density measurements were performed on the following representative sample of the Motorola XTL5000 VHF 57 watt mobile radios:

| Model # | Serial # | Test Frequencies (MHz) |
|---|---|---|
| M20KSS9PW1AN | 112 | 147.0125, 155.0125, 173.9875 |
| M20KTS9PW1AN | VHF P1 EME#46 | 147.4000, 155.0000, 173.9875 |

Presented below is a summary of the tested frequencies and associated power outputs for each DUT.

| DVR | | Mobile VHF Radios | | | |
|---|---|---|---|---|---|
| | | M20KSS9PW1AN | | M20KTS9PW1AN | |
| **Frequency** | **Po (W)** | **Frequency** | **Po (W)** | **Frequency** | **Po (W)** |
| 764 | 4.99 | 147.0125 | 55.6 | 147.4000 | 55.8 |
| 770 | 5.02 | 155.0125 | 55.8 | 155.0000 | 55.6 |
| 776 | 4.97 | 173.9875 | 55.6 | 173.9875 | 55.8 |
| 794 | 4.98 | | | | |
| 800 | 5.00 | | | | |
| 806 | 4.98 | | | | |

## 10.0 Test Set-Up Description

The following are the mobile antenna test configurations used for this product.
(for reference, see Illustration of antenna location and test distances in the APPENDIX A)

a) Each of the ¼ wave 0dBd gain antennas (HAD4007A, HAD4008A, HAD4009A) was assessed while mounted at the center of the roof of the test vehicle.

b) The ¼ wave 0dBd gain antenna model HAF4016A was assessed while mounted at the trunk.

Assessments were made internal and external to the test vehicle at the specified distances and test locations indicated in sections 6.0, 11.0, and the APPENDIX A.

## 11.0 Test Results Summary

APPENDIX E presents detailed raw MPE measurement grid information for each test configuration; person external or internal to the vehicle, TX frequency, antenna (location, model and gain), distance from antenna to probe sensor, E/H field measurements, calibration factor, MPE average over body, initial power, power density calc, power density max calc, IEEE/FCC controlled and uncontrolled limits, and maximum output power.

The Average over Body test methodology is consistent with IEEE/ANSI C95.1-1999 guidelines

MPE results are based on a DVR 100% duty cycle and VHF mobile 50% duty cycle which is in accordance with the User Manual instructions.

Below is an explanation of how the MPE results are calculated.

External to vehicle - 10 measurements are averaged over the body (*Body_Avg*).
Internal to vehicle - 3 measurements are averaged over the body (*Body_Avg*).
Narda Survey Meter measures in percent of the controlled limit. Therefore the averages over the body used in the calculations below reflect percentages.

Therefore;

$$Average_over_Body = Body_Avg * Controlled_Limit$$

$$Pwr_Density_Calc = Average_over_Body * _Duty_Cycle$$

$$Pwr_Density_Max_Calc = Pwr_Density_Calc * \frac{Max_Output_Power}{Initial_Output_Power}$$

Note; For *Initial Output Power*> *Max_Output_Power*, *Max_Output_Power* / *Initial Output Power* = 1

**The tables below summarize the highest MPE results of the E and H test configurations for the VHF mobiles, DVR, and combined assessments. See APPENDICES A and E respectively for the indicated test positions and associated raw measurement grid tables.**

**Table 1 - M20KSS9PW1AN VHF Mobile Assessments – Highest MPE result per test position**

| Tables | Antenna Model | Antenna Location | Test Frequency (MHz) | E/H Field | Passenger/ By-Stander Pos. | Max Calc Pwr Density ($mW/cm^2$) | % of Uncontrolled limit |
|---|---|---|---|---|---|---|---|
| Table 2 | HAD4007A | Roof | 147.0125 | E | Passenger | 0.16 | 80.0% |
| Table 23 | HAD4009A | Roof | 173.9875 | H | By-Stander Pos. #1 | 0.04 | 20.0% |
| Table 7 | HAD4007A | Roof | 147.0125 | E | By-Stander Pos. #2 | 0.07 | 35.0% |
| Table 12 | HAD4009A | Roof | 173.9875 | E | By-Stander Pos. #3 | 0.06 | 30.0% |
| Table 32 | HAD4008A | Roof | 155.0125 | E | By-Stander Pos. #4 | 0.04 | 20.0% |
| Table 17 | HAD4008A | Roof | 155.0125 | E | By-Stander Pos. #5 | 0.04 | 20.0% |

**Table 2 - M20KTS9PW1AN VHF Mobile Assessments - Highest MPE result per test position**

| Tables | Antenna Model | Antenna Location | Test Frequency (MHz) | E/H Field | Passenger/ By-Stander Pos. | Max Calc Pwr Density ($mW/cm^2$) | % of Uncontrolled limit |
|---|---|---|---|---|---|---|---|
| Table 2 | HAD4007A | Roof | 147.4000 | E | Passenger | 0.16 | 80.0% |
| Table 3 | HAD4008A | Roof | 155.0000 | E | By-Stander Pos. #1 | 0.04 | 20.0% |
| Table 8 | HAD4008A | Roof | 155.0000 | E | By-Stander Pos. #2 | 0.07 | 35.0% |
| Table 29 | HAD4008A | Roof | 155.0000 | H | By-Stander Pos. #3 | 0.06 | 30.0% |
| Table 31 | HAD4007A | Roof | 147.4000 | H | By-Stander Pos. #4 | 0.06 | 30.0% |
| Table 35 | HAD4008A | Roof | 155.0000 | H | By-Stander Pos. #5 | 0.06 | 30.0% |

**Table 3 - DQPMDVR7000P - DVR 700MHz Assessments - Highest MPE result per test position**

| Tables | Antenna Model | Antenna Location | Test Frequency (MHz) | E/H Field | Passenger/ By-Stander Pos. | Max Calc Pwr Density ($mW/cm^2$) | % of Uncontrolled limit |
|---|---|---|---|---|---|---|---|
| Table 10 | HAF4016A | Trunk | 800 | E | Passenger | 0.06 | 11.3% |
| Table 11 | HAF4016A | Trunk | 806 | E | By-Stander Pos. #1 | 0.07 | 13.0% |
| Table 15 | HAF4016A | Trunk | 776 | E | By-Stander Pos. #2 | 0.07 | 13.5% |
| Table 19 | HAF4016A | Trunk | 764 | E | By-Stander Pos. #3 | 0.06 | 11.8% |
| Table 27 | HAF4016A | Trunk | 776 | E | By-Stander Pos. #4 | 0.10 | 19.2% |
| Table 31 | HAF4016A | Trunk | 764 | E | By-Stander Pos. #5 | 0.09 | 17.6% |

**Table 4 - Combined VHF Mobile M20KSS9PW1AN and DVR DQPMDVR7000P (Calculated % of limit performance)**

| | Percentage of Limit | | |
|---|---|---|---|
| Test Position | M20KSS9PW1AN (147-174MHz) | DVR (700MHz) | Combined Percentages |
| Passenger | 80.0% | 11.3% | 91.3% |
| By-Stander #1 | 20.0% | 13.0% | 33.0% |
| By-Stander #2 | 35.0% | 13.5% | 48.5% |
| By-Stander #3 | 30.0% | 11.8% | 41.8% |
| By-Stander #4 | 20.0% | 19.2% | 39.2% |
| By-Stander #5 | 20.0% | 17.6% | 37.6% |

**Table 5 - Combined VHF Mobile M20KTS9PW1AN and DVR DQPMDVR7000P (Calculated % of limit performance)**

| | Percentage of Limit | | |
|---|---|---|---|
| Test Position | M20KTS9PW1AN (147-174MHz) | DVR (700MHz) | Combined Percentages |
| Passenger | 80.0% | 11.3% | 91.3% |
| By-Stander #1 | 20.0% | 13.0% | 33.0% |
| By-Stander #2 | 35.0% | 13.5% | 48.5% |
| By-Stander #3 | 30.0% | 11.8% | 41.8% |
| By-Stander #4 | 30.0% | 19.2% | 49.2% |
| By-Stander #5 | 30.0% | 17.6% | 47.6% |

## 12.0 Conclusion

Depending on the test frequency, both VHF mobile assessments were performed with an output power range of 55.6W – 55.8W. The DVR output power across the TX band (with 2dB duplexer loss) is 4.97W – 5.02W. The highest power density results for the XTL5000 VHF mobile devices scaled to the maximum allowable power output is 0.16mW/cm$^2$ internal to the vehicle and 0.07mW/cm$^2$ external to the vehicle. The highest power density results for the DVR device scaled to the maximum allowable power output is 0.06mW/cm$^2$ internal to the vehicle and 0.10mW/cm$^2$ external to the vehicle. The highest combined power density performance is 91.3% of the applicable FCC/IEEE MPE limits using the following methodology and formula:

Because the signals emitted by each individual transmitter are statistically uncorrelated, the collective compliance of the transmitters is determined by summing the individual ratios between actual (S) and maximum allowed (MPE) exposure. Compliance is achieved if the total exposure level (T) is less than one:

$$T = \frac{S_1}{MPE_1} + \frac{S_2}{MPE_2} + \ldots < 1$$

Therefore:

$$T = \frac{0.06}{0.53} + \frac{0.16}{0.20} = 0.913 < 1$$

The MPE results presented herein demonstrate compliance to the applicable FCC/IEEE Occupational/Controlled exposure limit of 1.0mW/cm$^2$ for the frequency range of 30-300MHz and f/300 for the frequency range of 300-1500MHz.

Compliance to the FCC/IEEE General population/Uncontrolled exposure limits of 0.2mW/cm$^2$ for the frequency range of 30-300MHz and f/1500 for the frequency range of 300-1500MHz is also demonstrated herein for both passengers and by-standers.

# APPENDIX A

## Illustration of antenna locations and test distances

MPE By-stander Test Positions

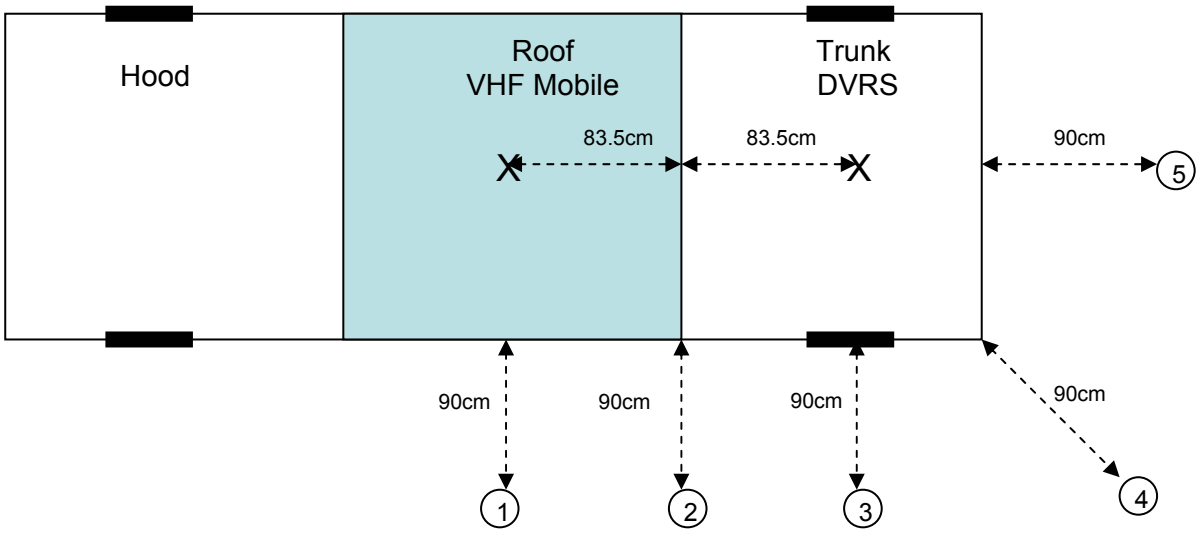


X Antenna position
(centered on roof & trunk)

◯ By-stander (BS) positions for DVRS and VHF Mobile (90cm from vehicle body)
Note:

1) Assessments were performed at each test position for each offered antenna.
2) Position 2 is located at the mid point between the two antennas which is by 83.5cm.
3) Total distance between by-stander position 1 and roof mount antenna is 180cm.
4) Total distance between by-stander position 5 and trunk mount antenna is 119.5cm.

# APPENDIX B

## Block diagram of MPE test configuration

# MPE Test Configuration

## Mobile Test Configuration

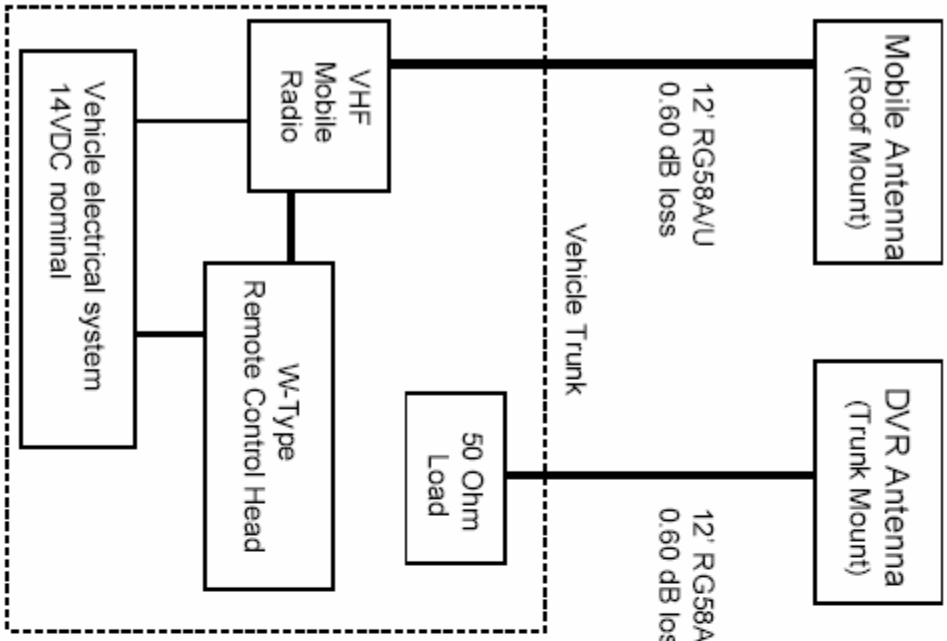


## DVR Test Configuration

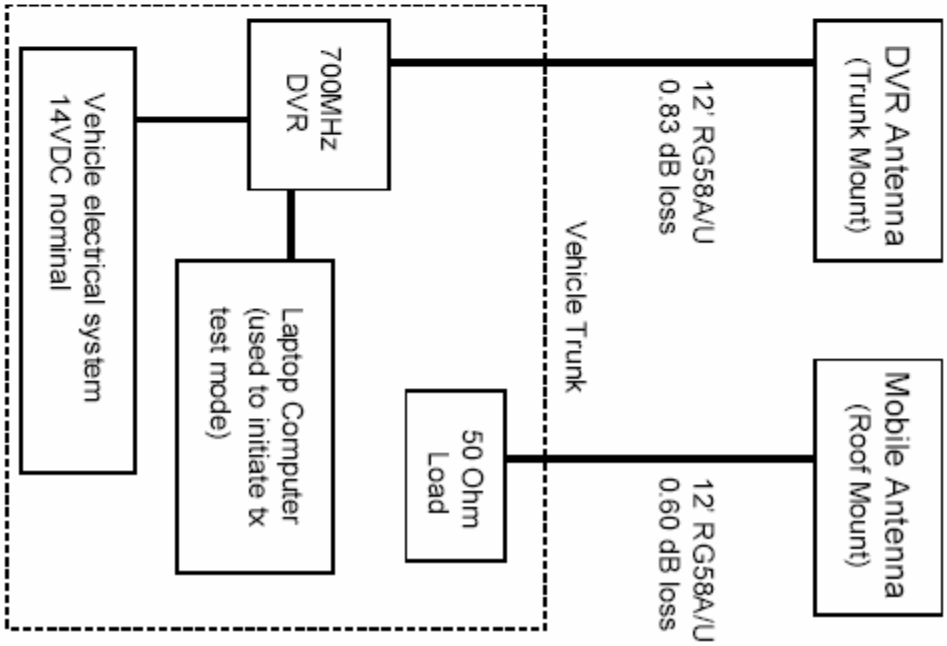

# APPENDIX C

## Meter/Probe Calibration Certificates

L3 communications
Narda Microwave-East

NARDA MICROWAVE-EAST
CALIBRATED IN ACCORDANCE
WITH ANSI Z540
CAL DATE 5-17-05 BY
CAL DUE 5-17-06
MOD 8718-10 S/N 01108

# Certificate of Calibration

L-3 Communications, Narda Microwave-East, hereby certifies that the referenced RF Radiation Hazard monitoring equipment has been calibrated in accordance with MIL-STD-45662A, ANSI Z540, ISO 10012 and ISO 9001: 2000.

The measured values were determined by comparison with our standards, which are traceable to the National Institute of Standards and Technology to the extent allowed by NIST's calibration facilities.

Customer: MOTOROLA
SCHAUMBURG, IL 60168-0429

Certificate #: 56219 1

Model #: 8718-10

Serial #: 01108

Description: METER W/CABLE

PO #: NP1819669

Date Calibrated: 05/17/2005

R.O. #: 56219

Vince Donovan
Manager of Instruments Assembly and Test

John C. Stine
Director of Quality Assurance

This certificate shall not be reproduced, except in full, without written approval from L-3 Communications, Narda Microwave-East

RFNRA001

RFNRA001

L3 communications
Narda Microwave-East

# Certificate of Calibration

L-3 Communications, Narda Microwave-East, hereby certifies that the referenced RF Radiation Hazard monitoring equipment has been calibrated in accordance with MIL-STD-45662A, ANSI Z540, ISO 10012 and ISO 9001: 2000.

The measured values were determined by comparison with our standards, which are traceable to the National Institute of Standards and Technology to the extent allowed by NIST's calibration facilities.

Customer: MOTOROLA
SCHAUMBURG, IL 60168-0429

Certificate #: 53821 1

Model #: 8718-10

Serial #: 01122

Description: METER W/CABLE

PO #: NP1675705

Date Calibrated: 03-02-2005

R.O. #: 53821

Vincent Donovan
Vince Donovan
Manager of Instruments Assembly and Test

John C. Stine
Director of Quality Assurance

This certificate shall not be reproduced, except in full, without written approval from L-3 Communications, Narda Microwave-East

L3 communications
Narda Microwave-East

NARDA MICROWAVE-EAST
CALIBRATED IN ACCORDANCE
WITH ANSI Z540
CAL DATE 7-21-05 BY
CAL DUE 7-21-06
MOD 8722 B S/N 13001

# Certificate of Calibration

L-3 Communications, Narda Microwave-East, hereby certifies that the referenced RF Radiation Hazard monitoring equipment has been calibrated in accordance with MIL-STD-45662A, ANSI Z540, ISO 10012 and ISO 9001: 2000.

The measured values were determined by comparison with our standards, which are traceable to the National Institute of Standards and Technology to the extent allowed by NIST's calibration facilities.

Customer: MOTOROLA
SCHAUMBURG, IL 60168-0429

Certificate #: 57518 1

Model #: 8722B

Serial #: 13001

Description: PROBE

PO #: NP1900854

Date Calibrated: 07/21/2005

R.O. #: 57518

Vince Donovan
Manager of Instruments Assembly and Test

John C. Stine
Director of Quality Assurance

This certificate shall not be reproduced, except in full, without written approval from L-3 Communications, Narda Microwave-East

narda
microwave-east
an L3 communications company

DATE 21-Jul-2005
REL HUMIDITY 40%

RELEASE # R57518
TEMP 21 DEG. C

NARDA MICROWAVE - EAST

MODEL # 8722B
SERIAL # 13001

Recal Probe - Date of Previous Probe Data = 06/10/2004

| FREQ MHZ | PRE-CAL DATA | FINAL CAL DATA | ELLIPSE RATIO, dB | FINAL CORR. FACTOR | DEVIATION DELTA DB | PREVIOUS FINAL COR |
|---|---|---|---|---|---|---|
| .30 | 0.78 | 0.74 | +/- 0.71 | 1.34 | -0.29 | 1.21 |
| 3.00 | 1.36 | 1.30 | +/- 0.47 | 0.77 | -0.12 | 0.72 |
| 10.00 | 1.01 | 0.97 | +/- 0.48 | 1.03 | +0.43 | 1.09 |
| 30.00 | 0.80 | 0.77 | +/- 0.44 | 1.30 | +0.47 | 1.39 |
| 100.00 | 1.30 | 1.24 | +/- 0.32 | 0.80 | +0.18 | 0.81 |
| 300.00 | 0.93 | 0.89 | +/- 0.16 | 1.13 | +0.25 | 1.14 |
| 750.00 | 1.15 | 1.10 | +/- 0.13 | 0.91 | +0.95 | 1.09 |
| 1000.00 | 1.30 | 1.25 | +/- 0.30 | 0.80 | +1.09 | 0.99 |
| 1700.00 | 0.91 | 0.87 | +/- 0.38 | 1.14 | +1.03 | 1.39 |
| 2450.00 | 1.23 | 1.24 | +/- 0.34 | 0.81 | +1.07 | 1.04 |
| 4000.00 | 0.87 | 0.88 | +/- 0.35 | 1.13 | 0.00 | 1.15 |
| 8200.00 | 1.06 | 1.07 | +/- 0.45 | 0.93 | 0.00 | 0.94 |
| 10000.00 | 1.02 | 1.03 | +/- 0.54 | 0.97 | +0.05 | 1.00 |
| 18000.00 | 1.19 | 1.20 | +/- 0.76 | 0.83 | -0.22 | 0.80 |
| 26500.00 | 1.04 | 1.05 | +/- 0.87 | 0.95 | -0.17 | 0.93 |
| 40000.00 | 0.80 | 0.81 | +/- 0.75 | 1.24 | -0.04 | 1.25 |

LOW FREQUENCY MULTIPLIER = 0.96 HIGH FREQUENCY MULTIPLIER = 1.013
FREQ. DEV. (3-40000 MHZ) = 2.288 DB
FREQ. DEV. (0.3-40000 MHZ) = 2.43 DB
MAX. ELLIPSE RATIO (0.3-40000 MHZ) = +/- 0.87 DB

PRE-CAL DATA REFLECTS THE MEAN ELLIPSE RATIO OF PROBE AS RECEIVED BY NARDA CALIBRATION DEPARTMENT, OR IS THE INITIAL, UN-ADJUSTED RATIO.
(PRE-CAL x OLD CORR. FACTOR) - 1 = DEVIATION FROM PREVIOUS (OLD) CALIBRATION DATA. NOTE: NOT APPLICABLE FOR NEW PROBES.
FINAL CAL DATA IS THE RATIO OF THE DISPLAYED TO THE APPLIED FIELD STRENGTH.
FINAL CORR. FACTOR IS THE RECIPROCAL OF FINAL CAL DATA.
FINAL CORR. FACTOR MULTIPLIED BY THE DISPLAYED FIELD STRENGTH READING GIVES THE ACTUAL ("CORRECTED") FIELD STRENGTH.
ELLIPSE RATIO IS EXPRESSED IN dB DEVIATION FROM THE MEAN DATA
RMS Uncertainty = +/- 0.5db. ATP # = 502120 REV J

ACCEPT 110 NARDA

TESTER V. M. Q.A. APPROVAL

PENR H003

L3 communications
Narda Microwave-East

NARDA MICROWAVE-EAST
CALIBRATED IN ACCORDANCE
WITH ANSI Z540
CAL DATE 5-12-05 BY KP
CAL DUE 5-12-06
MOD 8731 S/N 03006

# Certificate of Calibration

5/05

L-3 Communications, Narda Microwave-East, hereby certifies that the referenced RF Radiation Hazard monitoring equipment has been calibrated in accordance with MIL-STD-45662A, ANSI Z540, ISO 10012 and ISO 9001: 2000.

The measured values were determined by comparison with our standards, which are traceable to the National Institute of Standards and Technology to the extent allowed by NIST's calibration facilities.

Customer: MOTOROLA
SCHAUMBURG, IL 60168-0429

Certificate #: 56219 2

Model #: 8731

Serial #: 03006

Description: RAD MONITOR

PO #: NP1819669

Date Calibrated: 05/12/2005

R.O. #: 56219

Vince Donovan
Manager of Instruments Assembly and Test

John C. Stine
Director of Quality Assurance

This certificate shall not be reproduced, except in full, without written approval from L-3 Communications, Narda Microwave-East

narda
microwave-east
an communications company

DATE 12-May-2005
REL HUMIDITY 44%

RELEASE # R56219
TEMP 20 DEG. C

NARDA MICROWAVE - EAST

MODEL # 8731
SERIAL # 03006

Recal Probe - Date of Previous Probe Data = 04/07/2004

| FREQ MHZ | PRE-CAL DATA | FINAL CAL DATA | ELLIPSE RATIO, dB | FINAL CORR. FACTOR | DEVIATION DELTA DB | PREVIOUS FINAL CORR. |
|---|---|---|---|---|---|---|
| 10.00 | 0.86 | 0.90 | +/- 0.08 | 1.11 | -0.27 | 1.10 |
| 13.56 | 0.93 | 0.97 | +/- 0.07 | 1.03 | -0.26 | 1.02 |
| 27.12 | 0.94 | 0.98 | +/- 0.07 | 1.02 | -0.08 | 1.05 |
| 40.68 | 0.92 | 0.97 | +/- 0.05 | 1.03 | -0.20 | 1.04 |
| 50.00 | 0.93 | 0.98 | +/- 0.05 | 1.02 | -0.19 | 1.03 |
| 75.00 | 0.95 | 0.99 | +/- 0.07 | 1.01 | -0.10 | 1.03 |
| 100.00 | 0.94 | 0.98 | +/- 0.07 | 1.02 | -0.17 | 1.03 |
| 150.00 | 0.97 | 1.01 | +/- 0.07 | 0.99 | -0.14 | 1.00 |
| 200.00 | 0.99 | 1.03 | +/- 0.07 | 0.97 | -0.27 | 0.95 |
| 250.00 | 1.00 | 1.05 | +/- 0.07 | 0.96 | -0.19 | 0.96 |
| 300.00 | 0.98 | 1.03 | +/- 0.09 | 0.97 | -0.20 | 0.98 |

MULTIPLIER = 1.05
FREQ. DEV. (13-200 MHZ) = 0.296 DB
FREQ. DEV. (10-300 MHZ) = 0.66 DB
MAX. ELLIPSE RATIO (10-300 MHZ) = +/- 0.09 DB
ORIGINAL RESISTANCE = 619 OHMS
FINAL RESISTANCE = 650 OHMS
THERMOCOUPLE OUTPUT AT FULL SCALE POWER DENSITY = V = 95.23 mV

PRE-CAL DATA REFLECTS THE MEAN ELLIPSE RATIO OF PROBE AS RECEIVED BY NARDA CALIBRATION DEPARTMENT, OR IS THE INITIAL, UN-ADJUSTED RATIO. (PRE-CAL x OLD CORR. FACTOR) - 1 = DEVIATION FROM PREVIOUS (OLD) CALIBRATION DATA. NOTE: NOT APPLICABLE FOR NEW PROBES.

FINAL CAL DATA IS THE RATIO OF THE DISPLAYED TO THE APPLIED FIELD STRENGTH. FINAL CORR. FACTOR IS THE RECIPROCAL OF FINAL CAL DATA. FINAL CORR. FACTOR MULTIPLIED BY THE DISPLAYED FIELD STRENGTH READING GIVES THE ACTUAL ("CORRECTED") FIELD STRENGTH.

ELLIPSE RATIO IS EXPRESSED IN dB DEVIATION FROM THE MEAN DATA
RMS Uncertainty = +/- 0.5db. ATP # = 503195 REV D

TESTER V. M. Q.A. APPROVAL

L3 communications
Narda Microwave-East

NARDA MICROWAVE-EAST
CALIBRATED IN ACCORDANCE
WITH ANSI Z540
CAL DATE 6-28-05 BY 10
CAL DUE 6-28-06
MOD 8732 S/N 06007

# Certificate of Calibration

L-3 Communications, Narda Microwave-East, hereby certifies that the referenced RF Radiation Hazard monitoring equipment has been calibrated in accordance with MIL-STD-45662A, ANSI Z540, ISO 10012 and ISO 9001: 2000.

The measured values were determined by comparison with our standards, which are traceable to the National Institute of Standards and Technology to the extent allowed by NIST's calibration facilities.

Customer: MOTOROLA
SCHAUMBURG, IL 60168-0429

Certificate #: 57518 2

Model #: 8732

Serial #: 06007

Description: PROBE

PO #: NP1900854

Date Calibrated: 06/28/2005

R.O. #: 57518

Vince Donovan
Manager of Instruments Assembly and Test

John C. Stine
Director of Quality Assurance

This certificate shall not be reproduced, except in full, without written approval from L-3 Communications, Narda Microwave-East

narda
microwave-east
an L3 communications company

DATE 28-Jun-2005
REL HUMIDITY 47%

RELEASE # R57518
TEMP 21 DEG. C

NARDA MICROWAVE - EAST

MODEL # 8732
SERIAL # 06007

Recal Probe - Date of Previous Probe Data = 06/11/2004

| FREQ MHZ | PRE-CAL DATA | FINAL CAL DATA | ELLIPSE RATIO, dB | FINAL CORR. FACTOR | DEVIATION DELTA DB | PREVIOUS FINAL CORR. |
|---|---|---|---|---|---|---|
| .30 | 0.73 | 0.71 | +/- 0.18 | 1.40 | -0.27 | 1.29 |
| 1.00 | 0.76 | 0.74 | +/- 0.14 | 1.36 | -0.01 | 1.32 |
| 3.00 | 0.78 | 0.76 | +/- 0.14 | 1.32 | -0.01 | 1.29 |
| 10.00 | 0.79 | 0.77 | +/- 0.14 | 1.30 | -0.21 | 1.21 |
| 30.00 | 0.88 | 0.85 | +/- 0.07 | 1.17 | -0.18 | 1.10 |
| 100.00 | 1.44 | 1.40 | +/- 0.05 | 0.71 | +0.36 | 0.76 |
| 200.00 | 1.00 | 0.97 | +/- 0.07 | 1.03 | -0.26 | 0.95 |

MULTIPLIER = 0.977
FREQ. DEV. (0.3-200 MHZ) = 2.935 DB
FREQ. DEV. (0.3-200 MHZ) = 2.94 DB
MAX. ELLIPSE RATIO (0.3-200 MHZ) = +/- 0.18 DB

PRE-CAL DATA REFLECTS THE MEAN ELLIPSE RATIO OF PROBE AS RECEIVED BY NARDA CALIBRATION DEPARTMENT, OR IS THE INITIAL, UN-ADJUSTED RATIO. (PRE-CAL x OLD CORR. FACTOR) - 1 = DEVIATION FROM PREVIOUS (OLD) CALIBRATION DATA. NOTE: NOT APPLICABLE FOR NEW PROBES.

FINAL CAL DATA IS THE RATIO OF THE DISPLAYED TO THE APPLIED FIELD STRENGTH.
FINAL CORR. FACTOR IS THE RECIPROCAL OF FINAL CAL DATA.
FINAL CORR. FACTOR MULTIPLIED BY THE DISPLAYED FIELD STRENGTH READING GIVES THE ACTUAL ("CORRECTED") FIELD STRENGTH.

ELLIPSE RATIO IS EXPRESSED IN dB DEVIATION FROM THE MEAN DATA
RMS Uncertainty = +/- 0.5db. ATP # = 503747 REV E

ACCEPT 110 NARDA

TESTER V.M. Q.A. APPROVAL

# APPENDIX D

## Photos of Assessed Antennas

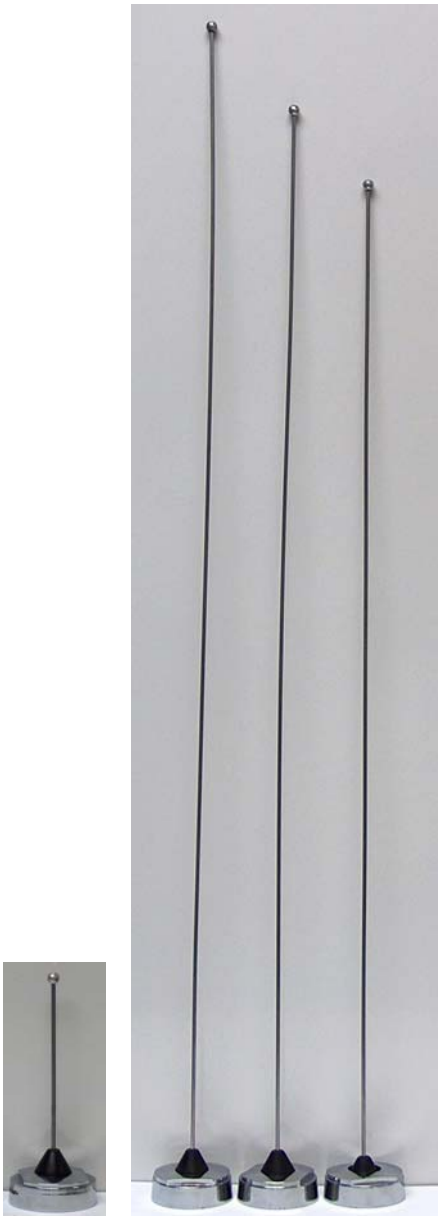

**Antenna kit numbers, from left to right; HAF4016A, HAD4007A, HAD4008A, HAD4009A**

# APPENDIX E

## Tables of raw measurement grid test results

## Mobile VHF M20KSS9PW1AN tables of raw measurement grid test results

BS Position 1

**Table 1**

| External Vehicle MPE Assessment @ 147.0125 MHz | | | | | | | | | |
|---|---|---|---|---|---|---|---|---|---|
| **Antenna Location** | **Antenna Model** | **Gain (dBi)** | **Meas. Distance (cm)** | **E/H Field** | **Calibration Factor** | **Average over Body (mW/cm^2)** | **Initial Power (W)** | **Pwr. Density Calc. (mW/cm^2)** | **Pwr. Density Max Calc. (mW/cm^2)** |
| Roof (cnt) | HAD4007A | 2.15 | 90 | E | 0.88 | 0.071 | 55.6 | 0.035 | 0.04 |
| **Measurement Grid** | | | | | | | | | |
| **Test Position** | **Height (cm)** | **% of Control Limit** | **Test Position** | **Height (cm)** | **% of Control Limit** | | | IEEE Controlled Limit | IEEE Uncontrolled Limit |
| 1 | 20 | 3.7% | 6 | 120 | 6.7% | | | 1.00 | 0.20 |
| 2 | 40 | 5.9% | 7 | 140 | 7.7% | | | | |
| 3 | 60 | 5.2% | 8 | 160 | 10.2% | | | | |
| 4 | 80 | 4.9% | 9 | 180 | 10.5% | | | | **RF Po (*Max)** |
| 5 | 100 | 5.8% | 10 | 200 | 10.2% | | | | 57.0 |

**Table 2**

| Internal Vehicle MPE Assessment @ 147.0125 MHz | | | | | | | | | | |
|---|---|---|---|---|---|---|---|---|---|---|
| **Antenna Location** | **Antenna** | **Gain (dBi)** | **Meas. Distance (cm)** | **E/H Field** | **Calibration Factor** | **Average over Head, Chest, Lower Trunk Back/Front seats (mW/cm^2)** | | **Initial Power (W)** | **Pwr. Density Calc. (mW/cm^2)** | **Pwr. Density Max Calc. (mW/cm^2)** |
| | | | | | | **Back** | **Front** | | | |
| Roof (cnt) | HAD4007A | 2.15 | Highest Reading | E | 0.88 | 0.322 | 0.145 | 55.6 | 0.161 | 0.16 |
| **Measurement Grid** | | | | | | | | | | |
| **Test Position** | | **% of Control Limit Head** | | **% of Control Limit Chest** | | **% of Control Limit Lower Trunk** | | IEEE Controlled Limit: | | 1.00 |
| Back Seat | | 60.0% | | 26.1% | | 10.4% | | IEEE Uncontrolled Limit: | | 0.20 |
| Front Seat | | 9.5% | | 20.7% | | 13.3% | | | **RF Po (*Max):** | 57.0 |

BS Position 1

**Table 3**

| External Vehicle MPE Assessment @ 155.0125 MHz | | | | | | | | | |
|---|---|---|---|---|---|---|---|---|---|
| **Antenna Location** | **Antenna Model** | **Gain (dBi)** | **Meas. Distance (cm)** | **E/H Field** | **Calibration Factor** | **Average over Body (mW/cm^2)** | **Initial Power (W)** | **Pwr. Density Calc. (mW/cm^2)** | **Pwr. Density Max Calc. (mW/cm^2)** |
| Roof (cnt) | HAD4008A | 2.15 | 90 | E | 0.89 | 0.076 | 55.8 | 0.038 | 0.04 |
| **Measurement Grid** | | | | | | | | | |
| **Test Position** | **Height (cm)** | **% of Control Limit** | **Test Position** | **Height (cm)** | **% of Control Limit** | | | IEEE Controlled Limit | IEEE Uncontrolled Limit |
| 1 | 20 | 3.8% | 6 | 120 | 8.0% | | | 1.00 | 0.20 |
| 2 | 40 | 5.4% | 7 | 140 | 9.2% | | | | |
| 3 | 60 | 4.8% | 8 | 160 | 11.3% | | | | |
| 4 | 80 | 5.4% | 9 | 180 | 10.6% | | | | **RF Po (*Max)** |
| 5 | 100 | 6.9% | 10 | 200 | 10.8% | | | | 57.0 |

## Mobile VHF M20KSS9PW1AN tables of raw measurement grid test results

**Table 4**

| Internal Vehicle MPE Assessment @ 155.0125 MHz | | | | | | | | | | |
|---|---|---|---|---|---|---|---|---|---|---|
| Antenna Location | Antenna | Gain (dBi) | Meas. Distance (cm) | E/H Field | Calibration Factor | Average over Head, Chest, Lower Trunk Back/Front seats (mW/cm^2) Back | Front | Initial Power (W) | Pwr. Density Calc. (mW/cm^2) | Pwr. Density Max Calc. (mW/cm^2) |
| Roof (cnt) | HAD4008A | 2.15 | Highest Reading | E | 0.89 | 0.236 | 0.103 | 55.8 | 0.118 | 0.12 |

| Measurement Grid | | | | | |
|---|---|---|---|---|---|
| Test Position | % of Control Limit Head | % of Control Limit Chest | % of Control Limit Lower Trunk | IEEE Controlled Limit: | 1.00 |
| Back Seat | 36.6% | 20.4% | 13.7% | IEEE Uncontrolled Limit: | 0.20 |
| Front Seat | 8.9% | 10.4% | 11.6% | RF Po (*Max): | 57.0 |

BS Position 1

**Table 5**

| External Vehicle MPE Assessment @ 173.9875 MHz | | | | | | | | | |
|---|---|---|---|---|---|---|---|---|---|
| Antenna Location | Antenna Model | Gain (dBi) | Meas. Distance (cm) | E/H Field | Calibration Factor | Average over Body (mW/cm^2) | Initial Power (W) | Pwr. Density Calc. (mW/cm^2) | Pwr. Density Max Calc. (mW/cm^2) |
| Roof (cnt) | HAD4009A | 2.15 | 90 | E | 0.92 | 0.076 | 55.6 | 0.038 | 0.04 |

| Measurement Grid | | | | | | | |
|---|---|---|---|---|---|---|---|
| Test Position | Height (cm) | % of Control Limit | Test Position | Height (cm) | % of Control Limit | IEEE Controlled Limit | IEEE Uncontrolled Limit |
| 1 | 20 | 4.2% | 6 | 120 | 9.1% | 1.00 | 0.20 |
| 2 | 40 | 4.7% | 7 | 140 | 10.2% | | |
| 3 | 60 | 3.4% | 8 | 160 | 8.9% | | |
| 4 | 80 | 4.6% | 9 | 180 | 10.9% | | RF Po (*Max) |
| 5 | 100 | 7.9% | 10 | 200 | 12.0% | | 57.0 |

**Table 6**

| Internal Vehicle MPE Assessment @ 173.9875 MHz | | | | | | | | | | |
|---|---|---|---|---|---|---|---|---|---|---|
| Antenna Location | Antenna | Gain (dBi) | Meas. Distance (cm) | E/H Field | Calibration Factor | Average over Head, Chest, Lower Trunk Back/Front seats (mW/cm^2) Back | Front | Initial Power (W) | Pwr. Density Calc. (mW/cm^2) | Pwr. Density Max Calc. (mW/cm^2) |
| Roof (cnt) | HAD4009A | 2.15 | Highest Reading | E | 0.92 | 0.206 | 0.057 | 55.6 | 0.103 | 0.11 |

| Measurement Grid | | | | | |
|---|---|---|---|---|---|
| Test Position | % of Control Limit Head | % of Control Limit Chest | % of Control Limit Lower Trunk | IEEE Controlled Limit: | 1.00 |
| Back Seat | 29.0% | 18.9% | 13.8% | IEEE Uncontrolled Limit: | 0.20 |
| Front Seat | 6.0% | 5.5% | 5.5% | RF Po (*Max): | 57.0 |

## Mobile VHF M20KSS9PW1AN tables of raw measurement grid test results

BS Position 2

**Table 7**

| External Vehicle MPE Assessment @ 147.0125 MHz | | | | | | | | | |
|---|---|---|---|---|---|---|---|---|---|
| **Antenna Location** | **Antenna Model** | **Gain (dBi)** | **Meas. Distance (cm)** | **E/H Field** | **Calibration Factor** | **Average over Body (mW/cm^2)** | **Initial Power (W)** | **Pwr. Density Calc. (mW/cm^2)** | **Pwr. Density Max Calc. (mW/cm^2)** |
| Roof (cnt) | HAD4007A | 2.15 | 90 | E | 0.88 | 0.128 | 55.6 | 0.064 | 0.07 |
| **Measurement Grid** | | | | | | | | | |
| **Test Position** | **Height (cm)** | **% of Control Limit** | **Test Position** | **Height (cm)** | **% of Control Limit** | | | IEEE Controlled Limit | IEEE Uncontrolled Limit |
| 1 | 20 | 4.1% | 6 | 120 | 16.4% | | | 1.00 | 0.20 |
| 2 | 40 | 6.2% | 7 | 140 | 19.1% | | | | |
| 3 | 60 | 7.1% | 8 | 160 | 19.2% | | | | |
| 4 | 80 | 9.2% | 9 | 180 | 17.6% | | | | **RF Po (*Max)** |
| 5 | 100 | 13.4% | 10 | 200 | 15.6% | | | | 57.0 |

BS Position 2

**Table 8**

| External Vehicle MPE Assessment @ 155.0125 MHz | | | | | | | | | |
|---|---|---|---|---|---|---|---|---|---|
| **Antenna Location** | **Antenna Model** | **Gain (dBi)** | **Meas. Distance (cm)** | **E/H Field** | **Calibration Factor** | **Average over Body (mW/cm^2)** | **Initial Power (W)** | **Pwr. Density Calc. (mW/cm^2)** | **Pwr. Density Max Calc. (mW/cm^2)** |
| Roof (cnt) | HAD4008A | 2.15 | 90 | E | 0.89 | 0.117 | 55.8 | 0.058 | 0.06 |
| **Measurement Grid** | | | | | | | | | |
| **Test Position** | **Height (cm)** | **% of Control Limit** | **Test Position** | **Height (cm)** | **% of Control Limit** | | | IEEE Controlled Limit | IEEE Uncontrolled Limit |
| 1 | 20 | 4.6% | 6 | 120 | 14.3% | | | 1.00 | 0.20 |
| 2 | 40 | 6.2% | 7 | 140 | 16.1% | | | | |
| 3 | 60 | 6.5% | 8 | 160 | 17.6% | | | | |
| 4 | 80 | 8.5% | 9 | 180 | 16.9% | | | | **RF Po (*Max)** |
| 5 | 100 | 11.7% | 10 | 200 | 14.5% | | | | 57.0 |

BS Position 2

**Table 9**

| External Vehicle MPE Assessment @ 173.9875 MHz | | | | | | | | | |
|---|---|---|---|---|---|---|---|---|---|
| **Antenna Location** | **Antenna Model** | **Gain (dBi)** | **Meas. Distance (cm)** | **E/H Field** | **Calibration Factor** | **Average over Body (mW/cm^2)** | **Initial Power (W)** | **Pwr. Density Calc. (mW/cm^2)** | **Pwr. Density Max Calc. (mW/cm^2)** |
| Roof (cnt) | HAD4009A | 2.15 | 90 | E | 0.92 | 0.117 | 55.6 | 0.059 | 0.06 |
| **Measurement Grid** | | | | | | | | | |
| **Test Position** | **Height (cm)** | **% of Control Limit** | **Test Position** | **Height (cm)** | **% of Control Limit** | | | IEEE Controlled Limit | IEEE Uncontrolled Limit |
| 1 | 20 | 5.6% | 6 | 120 | 15.0% | | | 1.00 | 0.20 |
| 2 | 40 | 7.8% | 7 | 140 | 14.9% | | | | |
| 3 | 60 | 6.5% | 8 | 160 | 16.6% | | | | |
| 4 | 80 | 8.9% | 9 | 180 | 15.6% | | | | **RF Po (*Max)** |
| 5 | 100 | 12.7% | 10 | 200 | 13.8% | | | | 57.0 |

## Mobile VHF M20KSS9PW1AN tables of raw measurement grid test results

BS Position 3

**Table 10**

| External Vehicle MPE Assessment @ 147.0125 MHz | | | | | | | | | |
|---|---|---|---|---|---|---|---|---|---|
| **Antenna Location** | **Antenna Model** | **Gain (dBi)** | **Meas. Distance (cm)** | **E/H Field** | **Calibration Factor** | **Average over Body (mW/cm^2)** | **Initial Power (W)** | **Pwr. Density Calc. (mW/cm^2)** | **Pwr. Density Max Calc. (mW/cm^2)** |
| Roof (cnt) | HAD4007A | 2.15 | 90 | E | 0.88 | 0.095 | 55.6 | 0.047 | 0.05 |
| **Measurement Grid** | | | | | | | | | |
| **Test Position** | **Height (cm)** | **% of Control Limit** | **Test Position** | **Height (cm)** | **% of Control Limit** | | | IEEE Controlled Limit | IEEE Uncontrolled Limit |
| 1 | 20 | 3.1% | 6 | 120 | 11.6% | | | 1.00 | 0.20 |
| 2 | 40 | 4.7% | 7 | 140 | 13.3% | | | | |
| 3 | 60 | 5.4% | 8 | 160 | 14.7% | | | | |
| 4 | 80 | 6.3% | 9 | 180 | 14.2% | | | | **RF Po (*Max)** |
| 5 | 100 | 8.8% | 10 | 200 | 12.7% | | | | 57.0 |

BS Position 3

**Table 11**

| External Vehicle MPE Assessment @ 155.0125 MHz | | | | | | | | | |
|---|---|---|---|---|---|---|---|---|---|
| **Antenna Location** | **Antenna Model** | **Gain (dBi)** | **Meas. Distance (cm)** | **E/H Field** | **Calibration Factor** | **Average over Body (mW/cm^2)** | **Initial Power (W)** | **Pwr. Density Calc. (mW/cm^2)** | **Pwr. Density Max Calc. (mW/cm^2)** |
| Roof (cnt) | HAD4008A | 2.15 | 90 | E | 0.89 | 0.106 | 55.8 | 0.053 | 0.05 |
| **Measurement Grid** | | | | | | | | | |
| **Test Position** | **Height (cm)** | **% of Control Limit** | **Test Position** | **Height (cm)** | **% of Control Limit** | | | IEEE Controlled Limit | IEEE Uncontrolled Limit |
| 1 | 20 | 5.3% | 6 | 120 | 13.4% | | | 1.00 | 0.20 |
| 2 | 40 | 6.5% | 7 | 140 | 14.5% | | | | |
| 3 | 60 | 6.4% | 8 | 160 | 14.8% | | | | |
| 4 | 80 | 8.5% | 9 | 180 | 14.0% | | | | **RF Po (*Max)** |
| 5 | 100 | 11.1% | 10 | 200 | 11.7% | | | | 57.0 |

BS Position 3

**Table 12**

| External Vehicle MPE Assessment @ 173.9875 MHz | | | | | | | | | |
|---|---|---|---|---|---|---|---|---|---|
| **Antenna Location** | **Antenna Model** | **Gain (dBi)** | **Meas. Distance (cm)** | **E/H Field** | **Calibration Factor** | **Average over Body (mW/cm^2)** | **Initial Power (W)** | **Pwr. Density Calc. (mW/cm^2)** | **Pwr. Density Max Calc. (mW/cm^2)** |
| Roof (cnt) | HAD4009A | 2.15 | 90 | E | 0.92 | 0.123 | 55.6 | 0.061 | 0.06 |
| **Measurement Grid** | | | | | | | | | |
| **Test Position** | **Height (cm)** | **% of Control Limit** | **Test Position** | **Height (cm)** | **% of Control Limit** | | | IEEE Controlled Limit | IEEE Uncontrolled Limit |
| 1 | 20 | 5.6% | 6 | 120 | 14.5% | | | 1.00 | 0.20 |
| 2 | 40 | 7.5% | 7 | 140 | 16.7% | | | | |
| 3 | 60 | 7.7% | 8 | 160 | 17.4% | | | | |
| 4 | 80 | 9.5% | 9 | 180 | 16.5% | | | | **RF Po (*Max)** |
| 5 | 100 | 13.5% | 10 | 200 | 13.8% | | | | 57.0 |

## Mobile VHF M20KSS9PW1AN tables of raw measurement grid test results

BS Position 4

**Table 13**

| External Vehicle MPE Assessment @ 147.0125 MHz | | | | | | | | | |
|---|---|---|---|---|---|---|---|---|---|
| **Antenna Location** | **Antenna Model** | **Gain (dBi)** | **Meas. Distance (cm)** | **E/H Field** | **Calibration Factor** | **Average over Body (mW/cm^2)** | **Initial Power (W)** | **Pwr. Density Calc. (mW/cm^2)** | **Pwr. Density Max Calc. (mW/cm^2)** |
| Roof (cnt) | HAD4007A | 2.15 | 90 | E | 0.88 | 0.065 | 55.6 | 0.033 | 0.03 |
| **Measurement Grid** | | | | | | | | | |
| **Test Position** | **Height (cm)** | **% of Control Limit** | **Test Position** | **Height (cm)** | **% of Control Limit** | | | IEEE Controlled Limit | IEEE Uncontrolled Limit |
| 1 | 20 | 2.1% | 6 | 120 | 8.1% | | | 1.00 | 0.20 |
| 2 | 40 | 3.2% | 7 | 140 | 10.4% | | | | |
| 3 | 60 | 2.8% | 8 | 160 | 11.1% | | | | |
| 4 | 80 | 3.7% | 9 | 180 | 10.1% | | | | **RF Po (*Max)** |
| 5 | 100 | 5.3% | 10 | 200 | 8.5% | | | | 57.0 |

BS Position 4

**Table 14**

| External Vehicle MPE Assessment @ 155.0125 MHz | | | | | | | | | |
|---|---|---|---|---|---|---|---|---|---|
| **Antenna Location** | **Antenna Model** | **Gain (dBi)** | **Meas. Distance (cm)** | **E/H Field** | **Calibration Factor** | **Average over Body (mW/cm^2)** | **Initial Power (W)** | **Pwr. Density Calc. (mW/cm^2)** | **Pwr. Density Max Calc. (mW/cm^2)** |
| Roof (cnt) | HAD4008A | 2.15 | 90 | E | 0.89 | 0.071 | 55.8 | 0.035 | 0.04 |
| **Measurement Grid** | | | | | | | | | |
| **Test Position** | **Height (cm)** | **% of Control Limit** | **Test Position** | **Height (cm)** | **% of Control Limit** | | | IEEE Controlled Limit | IEEE Uncontrolled Limit |
| 1 | 20 | 2.3% | 6 | 120 | 9.4% | | | 1.00 | 0.20 |
| 2 | 40 | 4.0% | 7 | 140 | 11.3% | | | | |
| 3 | 60 | 4.2% | 8 | 160 | 10.5% | | | | |
| 4 | 80 | 4.5% | 9 | 180 | 8.9% | | | | **RF Po (*Max)** |
| 5 | 100 | 7.2% | 10 | 200 | 8.3% | | | | 57.0 |

BS Position 4

**Table 15**

| External Vehicle MPE Assessment @ 173.9875 MHz | | | | | | | | | |
|---|---|---|---|---|---|---|---|---|---|
| **Antenna Location** | **Antenna Model** | **Gain (dBi)** | **Meas. Distance (cm)** | **E/H Field** | **Calibration Factor** | **Average over Body (mW/cm^2)** | **Initial Power (W)** | **Pwr. Density Calc. (mW/cm^2)** | **Pwr. Density Max Calc. (mW/cm^2)** |
| Roof (cnt) | HAD4009A | 2.15 | 90 | E | 0.92 | 0.073 | 55.6 | 0.037 | 0.04 |
| **Measurement Grid** | | | | | | | | | |
| **Test Position** | **Height (cm)** | **% of Control Limit** | **Test Position** | **Height (cm)** | **% of Control Limit** | | | IEEE Controlled Limit | IEEE Uncontrolled Limit |
| 1 | 20 | 4.1% | 6 | 120 | 10.1% | | | 1.00 | 0.20 |
| 2 | 40 | 6.3% | 7 | 140 | 10.2% | | | | |
| 3 | 60 | 5.0% | 8 | 160 | 8.6% | | | | |
| 4 | 80 | 5.6% | 9 | 180 | 8.2% | | | | **RF Po (*Max)** |
| 5 | 100 | 7.1% | 10 | 200 | 7.8% | | | | 57.0 |

## Mobile VHF M20KSS9PW1AN tables of raw measurement grid test results

BS Position 5

**Table 16**

| External Vehicle MPE Assessment @ 147.0125 MHz | | | | | | | | | |
|---|---|---|---|---|---|---|---|---|---|
| **Antenna Location** | **Antenna Model** | **Gain (dBi)** | **Meas. Distance (cm)** | **E/H Field** | **Calibration Factor** | **Average over Body (mW/cm^2)** | **Initial Power (W)** | **Pwr. Density Calc. (mW/cm^2)** | **Pwr. Density Max Calc. (mW/cm^2)** |
| Roof (cnt) | HAD4007A | 2.15 | 90 | E | 0.88 | 0.062 | 55.6 | 0.031 | 0.03 |
| **Measurement Grid** | | | | | | | | | |
| **Test Position** | **Height (cm)** | **% of Control Limit** | **Test Position** | **Height (cm)** | **% of Control Limit** | | | IEEE Controlled Limit | IEEE Uncontrolled Limit |
| 1 | 20 | 4.5% | 6 | 120 | 6.3% | | | 1.00 | 0.20 |
| 2 | 40 | 7.0% | 7 | 140 | 7.2% | | | | |
| 3 | 60 | 6.3% | 8 | 160 | 6.7% | | | | |
| 4 | 80 | 5.6% | 9 | 180 | 6.3% | | | | **RF Po (*Max)** |
| 5 | 100 | 6.0% | 10 | 200 | 5.8% | | | | 57.0 |

BS Position 5

**Table 17**

| External Vehicle MPE Assessment @ 155.0125 MHz | | | | | | | | | |
|---|---|---|---|---|---|---|---|---|---|
| **Antenna Location** | **Antenna Model** | **Gain (dBi)** | **Meas. Distance (cm)** | **E/H Field** | **Calibration Factor** | **Average over Body (mW/cm^2)** | **Initial Power (W)** | **Pwr. Density Calc. (mW/cm^2)** | **Pwr. Density Max Calc. (mW/cm^2)** |
| Roof (cnt) | HAD4008A | 2.15 | 90 | E | 0.89 | 0.074 | 55.8 | 0.037 | 0.04 |
| **Measurement Grid** | | | | | | | | | |
| **Test Position** | **Height (cm)** | **% of Control Limit** | **Test Position** | **Height (cm)** | **% of Control Limit** | | | IEEE Controlled Limit | IEEE Uncontrolled Limit |
| 1 | 20 | 5.3% | 6 | 120 | 7.9% | | | 1.00 | 0.20 |
| 2 | 40 | 7.3% | 7 | 140 | 8.5% | | | | |
| 3 | 60 | 7.1% | 8 | 160 | 8.1% | | | | |
| 4 | 80 | 7.7% | 9 | 180 | 8.5% | | | | **RF Po (*Max)** |
| 5 | 100 | 7.0% | 10 | 200 | 6.9% | | | | 57.0 |

BS Position 5

**Table 18**

| External Vehicle MPE Assessment @ 173.9875 MHz | | | | | | | | | |
|---|---|---|---|---|---|---|---|---|---|
| **Antenna Location** | **Antenna Model** | **Gain (dBi)** | **Meas. Distance (cm)** | **E/H Field** | **Calibration Factor** | **Average over Body (mW/cm^2)** | **Initial Power (W)** | **Pwr. Density Calc. (mW/cm^2)** | **Pwr. Density Max Calc. (mW/cm^2)** |
| Roof (cnt) | HAD4009A | 2.15 | 90 | E | 0.92 | 0.053 | 55.6 | 0.027 | 0.03 |
| **Measurement Grid** | | | | | | | | | |
| **Test Position** | **Height (cm)** | **% of Control Limit** | **Test Position** | **Height (cm)** | **% of Control Limit** | | | IEEE Controlled Limit | IEEE Uncontrolled Limit |
| 1 | 20 | 4.0% | 6 | 120 | 4.9% | | | 1.00 | 0.20 |
| 2 | 40 | 4.9% | 7 | 140 | 7.0% | | | | |
| 3 | 60 | 4.7% | 8 | 160 | 6.8% | | | | |
| 4 | 80 | 4.0% | 9 | 180 | 7.2% | | | | **RF Po (*Max)** |
| 5 | 100 | 4.0% | 10 | 200 | 5.8% | | | | 57.0 |

## Mobile VHF M20KSS9PW1AN tables of raw measurement grid test results

BS Position 1

**Table 19**

| External Vehicle MPE Assessment @ 147.0125 MHz | | | | | | | | | |
|---|---|---|---|---|---|---|---|---|---|
| **Antenna Location** | **Antenna Model** | **Gain (dBi)** | **Meas. Distance (cm)** | **E/H Field** | **Calibration Factor** | **Average over Body (mW/cm^2)** | **Initial Power (W)** | **Pwr. Density Calc. (mW/cm^2)** | **Pwr. Density Max Calc. (mW/cm^2)** |
| Roof (cnt) | HAD4007A | 2.15 | 90 | H | 0.86 | 0.047 | 55.6 | 0.024 | 0.02 |
| **Measurement Grid** | | | | | | | | | |
| **Test Position** | **Height (cm)** | **% of Control Limit** | **Test Position** | **Height (cm)** | **% of Control Limit** | | | IEEE Controlled Limit | IEEE Uncontrolled Limit |
| 1 | 20 | 1.3% | 6 | 120 | 4.6% | | | 1.00 | 0.20 |
| 2 | 40 | 1.7% | 7 | 140 | 5.6% | | | | |
| 3 | 60 | 4.8% | 8 | 160 | 5.8% | | | | |
| 4 | 80 | 3.8% | 9 | 180 | 6.3% | | | | **RF Po (*Max)** |
| 5 | 100 | 6.0% | 10 | 200 | 7.1% | | | | 57.0 |

**Table 20**

| Internal Vehicle MPE Assessment @ 147.0125 MHz | | | | | | | | | | |
|---|---|---|---|---|---|---|---|---|---|---|
| **Antenna Location** | **Antenna** | **Gain (dBi)** | **Meas. Distance (cm)** | **E/H Field** | **Calibration Factor** | **Average over Head, Chest, Lower Trunk Back/Front seats (mW/cm^2)** | | **Initial Power (W)** | **Pwr. Density Calc. (mW/cm^2)** | **Pwr. Density Max Calc. (mW/cm^2)** |
| | | | | | | **Back** | **Front** | | | |
| Roof (cnt) | HAD4007A | 2.15 | Highest Reading | H | 0.86 | 0.137 | 0.109 | 55.6 | 0.068 | 0.07 |
| **Measurement Grid** | | | | | | | | | | |
| **Test Position** | | **% of Control Limit Head** | | **% of Control Limit Chest** | | **% of Control Limit Lower Trunk** | | IEEE Controlled Limit: | | 1.00 |
| Back Seat | | 27.2% | | 6.5% | | 7.3% | | IEEE Uncontrolled Limit: | | 0.20 |
| Front Seat | | 14.2% | | 12.0% | | 6.6% | | | **RF Po (*Max):** | 57.0 |

BS Position 1

**Table 21**

| External Vehicle MPE Assessment @ 155.0125 MHz | | | | | | | | | |
|---|---|---|---|---|---|---|---|---|---|
| **Antenna Location** | **Antenna Model** | **Gain (dBi)** | **Meas. Distance (cm)** | **E/H Field** | **Calibration Factor** | **Average over Body (mW/cm^2)** | **Initial Power (W)** | **Pwr. Density Calc. (mW/cm^2)** | **Pwr. Density Max Calc. (mW/cm^2)** |
| Roof (cnt) | HAD4008A | 2.15 | 90 | H | 0.89 | 0.083 | 55.6 | 0.042 | 0.04 |
| **Measurement Grid** | | | | | | | | | |
| **Test Position** | **Height (cm)** | **% of Control Limit** | **Test Position** | **Height (cm)** | **% of Control Limit** | | | IEEE Controlled Limit | IEEE Uncontrolled Limit |
| 1 | 20 | 3.4% | 6 | 120 | 9.9% | | | 1.00 | 0.20 |
| 2 | 40 | 4.9% | 7 | 140 | 10.5% | | | | |
| 3 | 60 | 6.5% | 8 | 160 | 9.7% | | | | |
| 4 | 80 | 10.2% | 9 | 180 | 10.3% | | | | **RF Po (*Max)** |
| 5 | 100 | 9.1% | 10 | 200 | 8.7% | | | | 57.0 |

## Mobile VHF M20KSS9PW1AN tables of raw measurement grid test results

**Table 22**

| Internal Vehicle MPE Assessment @ 155.0125 MHz | | | | | | | | | | |
|---|---|---|---|---|---|---|---|---|---|---|
| Antenna Location | Antenna | Gain (dBi) | Meas. Distance (cm) | E/H Field | Calibration Factor | Average over Head, Chest, Lower Trunk Back/Front seats (mW/cm^2) Back | Front | Initial Power (W) | Pwr. Density Calc. (mW/cm^2) | Pwr. Density Max Calc. (mW/cm^2) |
| Roof (cnt) | HAD4008A | 2.15 | Highest Reading | H | 0.89 | 0.095 | 0.094 | 55.6 | 0.048 | 0.05 |
| Measurement Grid | | | | | | | | | | |
| Test Position | | % of Control Limit Head | | % of Control Limit Chest | | % of Control Limit Lower Trunk | | IEEE Controlled Limit: | | 1.00 |
| Back Seat | | 15.6% | | 7.4% | | 5.6% | | IEEE Uncontrolled Limit: | | 0.20 |
| Front Seat | | 13.3% | | 9.5% | | 5.3% | | | RF Po (*Max): | 57.0 |

BS Position 1

**Table 23**

| External Vehicle MPE Assessment @ 173.9875 MHz | | | | | | | | | |
|---|---|---|---|---|---|---|---|---|---|
| Antenna Location | Antenna Model | Gain (dBi) | Meas. Distance (cm) | E/H Field | Calibration Factor | Average over Body (mW/cm^2) | Initial Power (W) | Pwr. Density Calc. (mW/cm^2) | Pwr. Density Max Calc. (mW/cm^2) |
| Roof (cnt) | HAD4009A | 2.15 | 90 | H | 0.95 | 0.087 | 55.6 | 0.043 | 0.04 |
| Measurement Grid | | | | | | | | | |
| Test Position | Height (cm) | % of Control Limit | Test Position | Height (cm) | % of Control Limit | | | IEEE Controlled Limit | IEEE Uncontrolled Limit |
| 1 | 20 | 3.9% | 6 | 120 | 13.0% | | | 1.00 | 0.20 |
| 2 | 40 | 3.5% | 7 | 140 | 12.5% | | | | |
| 3 | 60 | 4.8% | 8 | 160 | 10.3% | | | | |
| 4 | 80 | 7.2% | 9 | 180 | 11.0% | | | | RF Po (*Max) |
| 5 | 100 | 11.0% | 10 | 200 | 9.6% | | | | 57.0 |

**Table 24**

| Internal Vehicle MPE Assessment @ 173.9875 MHz | | | | | | | | | | |
|---|---|---|---|---|---|---|---|---|---|---|
| Antenna Location | Antenna | Gain (dBi) | Meas. Distance (cm) | E/H Field | Calibration Factor | Average over Head, Chest, Lower Trunk Back/Front seats (mW/cm^2) Back | Front | Initial Power (W) | Pwr. Density Calc. (mW/cm^2) | Pwr. Density Max Calc. (mW/cm^2) |
| Roof (cnt) | HAD4009A | 2.15 | Highest Reading | H | 0.95 | 0.086 | 0.130 | 55.6 | 0.065 | 0.07 |
| Measurement Grid | | | | | | | | | | |
| Test Position | | % of Control Limit Head | | % of Control Limit Chest | | % of Control Limit Lower Trunk | | IEEE Controlled Limit: | | 1.00 |
| Back Seat | | 13.0% | | 7.8% | | 4.9% | | IEEE Uncontrolled Limit: | | 0.20 |
| Front Seat | | 18.0% | | 12.2% | | 8.9% | | | RF Po (*Max): | 57.0 |

## Mobile VHF M20KSS9PW1AN tables of raw measurement grid test results

BS Position 2

**Table 25**

| External Vehicle MPE Assessment @ 147.0125 MHz | | | | | | | | | |
|---|---|---|---|---|---|---|---|---|---|
| **Antenna Location** | **Antenna Model** | **Gain (dBi)** | **Meas. Distance (cm)** | **E/H Field** | **Calibration Factor** | **Average over Body (mW/cm^2)** | **Initial Power (W)** | **Pwr. Density Calc. (mW/cm^2)** | **Pwr. Density Max Calc. (mW/cm^2)** |
| Roof (cnt) | HAD4007A | 2.15 | 90 | H | 0.86 | 0.100 | 55.6 | 0.050 | 0.05 |
| **Measurement Grid** | | | | | | | | | |
| **Test Position** | **Height (cm)** | **% of Control Limit** | **Test Position** | **Height (cm)** | **% of Control Limit** | | | IEEE Controlled Limit | IEEE Uncontrolled Limit |
| 1 | 20 | 5.6% | 6 | 120 | 13.3% | | | 1.00 | 0.20 |
| 2 | 40 | 6.5% | 7 | 140 | 13.4% | | | | |
| 3 | 60 | 7.2% | 8 | 160 | 9.6% | | | | |
| 4 | 80 | 12.8% | 9 | 180 | 9.2% | | | | **RF Po (*Max)** |
| 5 | 100 | 11.9% | 10 | 200 | 10.6% | | | | 57.0 |

BS Position 2

**Table 26**

| External Vehicle MPE Assessment @ 155.0125 MHz | | | | | | | | | |
|---|---|---|---|---|---|---|---|---|---|
| **Antenna Location** | **Antenna Model** | **Gain (dBi)** | **Meas. Distance (cm)** | **E/H Field** | **Calibration Factor** | **Average over Body (mW/cm^2)** | **Initial Power (W)** | **Pwr. Density Calc. (mW/cm^2)** | **Pwr. Density Max Calc. (mW/cm^2)** |
| Roof (cnt) | HAD4008A | 2.15 | 90 | H | 0.89 | 0.099 | 55.6 | 0.049 | 0.05 |
| **Measurement Grid** | | | | | | | | | |
| **Test Position** | **Height (cm)** | **% of Control Limit** | **Test Position** | **Height (cm)** | **% of Control Limit** | | | IEEE Controlled Limit | IEEE Uncontrolled Limit |
| 1 | 20 | 5.0% | 6 | 120 | 12.6% | | | 1.00 | 0.20 |
| 2 | 40 | 5.1% | 7 | 140 | 12.6% | | | | |
| 3 | 60 | 8.6% | 8 | 160 | 13.2% | | | | |
| 4 | 80 | 11.0% | 9 | 180 | 9.3% | | | | **RF Po (*Max)** |
| 5 | 100 | 11.1% | 10 | 200 | 10.0% | | | | 57.0 |

BS Position 2

**Table 27**

| External Vehicle MPE Assessment @ 173.9875 MHz | | | | | | | | | |
|---|---|---|---|---|---|---|---|---|---|
| **Antenna Location** | **Antenna Model** | **Gain (dBi)** | **Meas. Distance (cm)** | **E/H Field** | **Calibration Factor** | **Average over Body (mW/cm^2)** | **Initial Power (W)** | **Pwr. Density Calc. (mW/cm^2)** | **Pwr. Density Max Calc. (mW/cm^2)** |
| Roof (cnt) | HAD4009A | 2.15 | 90 | H | 0.94 | 0.095 | 55.6 | 0.047 | 0.05 |
| **Measurement Grid** | | | | | | | | | |
| **Test Position** | **Height (cm)** | **% of Control Limit** | **Test Position** | **Height (cm)** | **% of Control Limit** | | | IEEE Controlled Limit | IEEE Uncontrolled Limit |
| 1 | 20 | 5.3% | 6 | 120 | 14.7% | | | 1.00 | 0.20 |
| 2 | 40 | 4.3% | 7 | 140 | 13.3% | | | | |
| 3 | 60 | 4.3% | 8 | 160 | 11.7% | | | | |
| 4 | 80 | 8.2% | 9 | 180 | 11.5% | | | | **RF Po (*Max)** |
| 5 | 100 | 11.5% | 10 | 200 | 9.8% | | | | 57.0 |

## Mobile VHF M20KSS9PW1AN tables of raw measurement grid test results

BS Position 3

**Table 28**

| External Vehicle MPE Assessment @ 147.0125 MHz | | | | | | | | | |
|---|---|---|---|---|---|---|---|---|---|
| **Antenna Location** | **Antenna Model** | **Gain (dBi)** | **Meas. Distance (cm)** | **E/H Field** | **Calibration Factor** | **Average over Body (mW/cm^2)** | **Initial Power (W)** | **Pwr. Density Calc. (mW/cm^2)** | **Pwr. Density Max Calc. (mW/cm^2)** |
| Roof (cnt) | HAD4007A | 2.15 | 90 | H | 0.86 | 0.080 | 55.6 | 0.040 | 0.04 |
| **Measurement Grid** | | | | | | | | | |
| **Test Position** | **Height (cm)** | **% of Control Limit** | **Test Position** | **Height (cm)** | **% of Control Limit** | | | IEEE Controlled Limit | IEEE Uncontrolled Limit |
| 1 | 20 | 3.6% | 6 | 120 | 11.3% | | | 1.00 | 0.20 |
| 2 | 40 | 4.2% | 7 | 140 | 11.0% | | | | |
| 3 | 60 | 5.8% | 8 | 160 | 8.7% | | | | |
| 4 | 80 | 10.6% | 9 | 180 | 7.8% | | | | **RF Po (*Max)** |
| 5 | 100 | 10.5% | 10 | 200 | 6.9% | | | | 57.0 |

BS Position 3

**Table 29**

| External Vehicle MPE Assessment @ 155.0125 MHz | | | | | | | | | |
|---|---|---|---|---|---|---|---|---|---|
| **Antenna Location** | **Antenna Model** | **Gain (dBi)** | **Meas. Distance (cm)** | **E/H Field** | **Calibration Factor** | **Average over Body (mW/cm^2)** | **Initial Power (W)** | **Pwr. Density Calc. (mW/cm^2)** | **Pwr. Density Max Calc. (mW/cm^2)** |
| Roof (cnt) | HAD4008A | 2.15 | 90 | H | 0.89 | 0.108 | 55.6 | 0.054 | 0.06 |
| **Measurement Grid** | | | | | | | | | |
| **Test Position** | **Height (cm)** | **% of Control Limit** | **Test Position** | **Height (cm)** | **% of Control Limit** | | | IEEE Controlled Limit | IEEE Uncontrolled Limit |
| 1 | 20 | 4.7% | 6 | 120 | 14.9% | | | 1.00 | 0.20 |
| 2 | 40 | 7.3% | 7 | 140 | 16.5% | | | | |
| 3 | 60 | 8.9% | 8 | 160 | 14.7% | | | | |
| 4 | 80 | 13.0% | 9 | 180 | 7.2% | | | | **RF Po (*Max)** |
| 5 | 100 | 13.6% | 10 | 200 | 7.0% | | | | 57.0 |

BS Position 3

**Table 30**

| External Vehicle MPE Assessment @ 173.9875 MHz | | | | | | | | | |
|---|---|---|---|---|---|---|---|---|---|
| **Antenna Location** | **Antenna Model** | **Gain (dBi)** | **Meas. Distance (cm)** | **E/H Field** | **Calibration Factor** | **Average over Body (mW/cm^2)** | **Initial Power (W)** | **Pwr. Density Calc. (mW/cm^2)** | **Pwr. Density Max Calc. (mW/cm^2)** |
| Roof (cnt) | HAD4009A | 2.15 | 90 | H | 0.95 | 0.093 | 55.6 | 0.047 | 0.05 |
| **Measurement Grid** | | | | | | | | | |
| **Test Position** | **Height (cm)** | **% of Control Limit** | **Test Position** | **Height (cm)** | **% of Control Limit** | | | IEEE Controlled Limit | IEEE Uncontrolled Limit |
| 1 | 20 | 5.0% | 6 | 120 | 12.2% | | | 1.00 | 0.20 |
| 2 | 40 | 6.6% | 7 | 140 | 10.5% | | | | |
| 3 | 60 | 8.9% | 8 | 160 | 10.3% | | | | |
| 4 | 80 | 10.3% | 9 | 180 | 10.6% | | | | **RF Po (*Max)** |
| 5 | 100 | 11.8% | 10 | 200 | 7.1% | | | | 57.0 |

## Mobile VHF M20KSS9PW1AN tables of raw measurement grid test results

BS Position 4

**Table 31**

| External Vehicle MPE Assessment @ 147.0125 MHz | | | | | | | | | |
|---|---|---|---|---|---|---|---|---|---|
| **Antenna Location** | **Antenna Model** | **Gain (dBi)** | **Meas. Distance (cm)** | **E/H Field** | **Calibration Factor** | **Average over Body (mW/cm^2)** | **Initial Power (W)** | **Pwr. Density Calc. (mW/cm^2)** | **Pwr. Density Max Calc. (mW/cm^2)** |
| Roof (cnt) | HAD4007A | 2.15 | 90 | H | 0.86 | 0.081 | 55.6 | 0.040 | 0.04 |
| **Measurement Grid** | | | | | | | | | |
| **Test Position** | **Height (cm)** | **% of Control Limit** | **Test Position** | **Height (cm)** | **% of Control Limit** | | | IEEE Controlled Limit | IEEE Uncontrolled Limit |
| 1 | 20 | 4.6% | 6 | 120 | 11.5% | | | 1.00 | 0.20 |
| 2 | 40 | 6.0% | 7 | 140 | 12.2% | | | | |
| 3 | 60 | 5.5% | 8 | 160 | 7.3% | | | | |
| 4 | 80 | 10.5% | 9 | 180 | 7.1% | | | | **RF Po (*Max)** |
| 5 | 100 | 11.4% | 10 | 200 | 4.4% | | | | 57.0 |

BS Position 4

**Table 32**

| External Vehicle MPE Assessment @ 155.0125 MHz | | | | | | | | | |
|---|---|---|---|---|---|---|---|---|---|
| **Antenna Location** | **Antenna Model** | **Gain (dBi)** | **Meas. Distance (cm)** | **E/H Field** | **Calibration Factor** | **Average over Body (mW/cm^2)** | **Initial Power (W)** | **Pwr. Density Calc. (mW/cm^2)** | **Pwr. Density Max Calc. (mW/cm^2)** |
| Roof (cnt) | HAD4008A | 2.15 | 90 | H | 0.89 | 0.083 | 55.6 | 0.042 | 0.04 |
| **Measurement Grid** | | | | | | | | | |
| **Test Position** | **Height (cm)** | **% of Control Limit** | **Test Position** | **Height (cm)** | **% of Control Limit** | | | IEEE Controlled Limit | IEEE Uncontrolled Limit |
| 1 | 20 | 5.4% | 6 | 120 | 11.6% | | | 1.00 | 0.20 |
| 2 | 40 | 5.9% | 7 | 140 | 11.4% | | | | |
| 3 | 60 | 6.0% | 8 | 160 | 9.2% | | | | |
| 4 | 80 | 10.8% | 9 | 180 | 6.5% | | | | **RF Po (*Max)** |
| 5 | 100 | 11.5% | 10 | 200 | 4.7% | | | | 57.0 |

BS Position 4

**Table 33**

| External Vehicle MPE Assessment @ 173.9875 MHz | | | | | | | | | |
|---|---|---|---|---|---|---|---|---|---|
| **Antenna Location** | **Antenna Model** | **Gain (dBi)** | **Meas. Distance (cm)** | **E/H Field** | **Calibration Factor** | **Average over Body (mW/cm^2)** | **Initial Power (W)** | **Pwr. Density Calc. (mW/cm^2)** | **Pwr. Density Max Calc. (mW/cm^2)** |
| Roof (cnt) | HAD4009A | 2.15 | 90 | H | 0.95 | 0.066 | 55.6 | 0.033 | 0.03 |
| **Measurement Grid** | | | | | | | | | |
| **Test Position** | **Height (cm)** | **% of Control Limit** | **Test Position** | **Height (cm)** | **% of Control Limit** | | | IEEE Controlled Limit | IEEE Uncontrolled Limit |
| 1 | 20 | 2.4% | 6 | 120 | 7.6% | | | 1.00 | 0.20 |
| 2 | 40 | 2.8% | 7 | 140 | 7.8% | | | | |
| 3 | 60 | 5.6% | 8 | 160 | 9.6% | | | | |
| 4 | 80 | 5.4% | 9 | 180 | 8.7% | | | | **RF Po (*Max)** |
| 5 | 100 | 7.9% | 10 | 200 | 8.6% | | | | 57.0 |

## Mobile VHF M20KSS9PW1AN tables of raw measurement grid test results

BS Position 5

**Table 34**

| External Vehicle MPE Assessment @ 147.0125 MHz | | | | | | | | | |
|---|---|---|---|---|---|---|---|---|---|
| **Antenna Location** | **Antenna Model** | **Gain (dBi)** | **Meas. Distance (cm)** | **E/H Field** | **Calibration Factor** | **Average over Body (mW/cm^2)** | **Initial Power (W)** | **Pwr. Density Calc. (mW/cm^2)** | **Pwr. Density Max Calc. (mW/cm^2)** |
| Roof (cnt) | HAD4007A | 2.15 | 90 | H | 0.86 | 0.055 | 55.6 | 0.027 | 0.03 |
| **Measurement Grid** | | | | | | | | | |
| **Test Position** | **Height (cm)** | **% of Control Limit** | **Test Position** | **Height (cm)** | **% of Control Limit** | | | IEEE Controlled Limit | IEEE Uncontrolled Limit |
| 1 | 20 | 3.5% | 6 | 120 | 5.2% | | | 1.00 | 0.20 |
| 2 | 40 | 4.8% | 7 | 140 | 6.3% | | | | |
| 3 | 60 | 7.1% | 8 | 160 | 4.7% | | | | |
| 4 | 80 | 7.3% | 9 | 180 | 4.5% | | | | **RF Po (*Max)** |
| 5 | 100 | 8.8% | 10 | 200 | 2.5% | | | | 57.0 |

BS Position 5

**Table 35**

| External Vehicle MPE Assessment @ 155.0125 MHz | | | | | | | | | |
|---|---|---|---|---|---|---|---|---|---|
| **Antenna Location** | **Antenna Model** | **Gain (dBi)** | **Meas. Distance (cm)** | **E/H Field** | **Calibration Factor** | **Average over Body (mW/cm^2)** | **Initial Power (W)** | **Pwr. Density Calc. (mW/cm^2)** | **Pwr. Density Max Calc. (mW/cm^2)** |
| Roof (cnt) | HAD4008A | 2.15 | 90 | H | 0.89 | 0.066 | 55.6 | 0.033 | 0.03 |
| **Measurement Grid** | | | | | | | | | |
| **Test Position** | **Height (cm)** | **% of Control Limit** | **Test Position** | **Height (cm)** | **% of Control Limit** | | | IEEE Controlled Limit | IEEE Uncontrolled Limit |
| 1 | 20 | 4.8% | 6 | 120 | 7.8% | | | 1.00 | 0.20 |
| 2 | 40 | 3.2% | 7 | 140 | 9.2% | | | | |
| 3 | 60 | 4.1% | 8 | 160 | 8.9% | | | | |
| 4 | 80 | 7.2% | 9 | 180 | 9.2% | | | | **RF Po (*Max)** |
| 5 | 100 | 7.3% | 10 | 200 | 4.7% | | | | 57.0 |

BS Position 5

**Table 36**

| External Vehicle MPE Assessment @ 173.9875 MHz | | | | | | | | | |
|---|---|---|---|---|---|---|---|---|---|
| **Antenna Location** | **Antenna Model** | **Gain (dBi)** | **Meas. Distance (cm)** | **E/H Field** | **Calibration Factor** | **Average over Body (mW/cm^2)** | **Initial Power (W)** | **Pwr. Density Calc. (mW/cm^2)** | **Pwr. Density Max Calc. (mW/cm^2)** |
| Roof (cnt) | HAD4009A | 2.15 | 90 | H | 0.95 | 0.039 | 55.6 | 0.020 | 0.02 |
| **Measurement Grid** | | | | | | | | | |
| **Test Position** | **Height (cm)** | **% of Control Limit** | **Test Position** | **Height (cm)** | **% of Control Limit** | | | IEEE Controlled Limit | IEEE Uncontrolled Limit |
| 1 | 20 | 1.6% | 6 | 120 | 4.9% | | | 1.00 | 0.20 |
| 2 | 40 | 1.2% | 7 | 140 | 4.2% | | | | |
| 3 | 60 | 3.7% | 8 | 160 | 4.9% | | | | |
| 4 | 80 | 4.5% | 9 | 180 | 4.3% | | | | **RF Po (*Max)** |
| 5 | 100 | 4.7% | 10 | 200 | 5.2% | | | | 57.0 |

## Mobile VHF M20KTS9PW1AN tables of raw measurement grid test results

BS Position 1

**Table 1**

| External Vehicle MPE Assessment @ 147.4 MHz | | | | | | | | | |
|---|---|---|---|---|---|---|---|---|---|
| **Antenna Location** | **Antenna Model** | **Gain (dBi)** | **Meas. Distance (cm)** | **E/H Field** | **Calibration Factor** | **Average over Body (mW/cm^2)** | **Initial Power (W)** | **Pwr. Density Calc. (mW/cm^2)** | **Pwr. Density Max Calc. (mW/cm^2)** |
| Roof (cnt) | HAD4007A | 2.15 | 90 | E | 0.88 | 0.077 | 55.8 | 0.039 | 0.04 |
| **Measurement Grid** | | | | | | | | | |
| **Test Position** | **Height (cm)** | **% of Control Limit** | **Test Position** | **Height (cm)** | **% of Control Limit** | | | IEEE Controlled Limit | IEEE Uncontrolled Limit |
| 1 | 20 | 3.6% | 6 | 120 | 8.4% | | | 1.00 | 0.20 |
| 2 | 40 | 4.9% | 7 | 140 | 8.9% | | | | |
| 3 | 60 | 4.8% | 8 | 160 | 10.6% | | | | |
| 4 | 80 | 4.9% | 9 | 180 | 11.8% | | | | **RF Po (*Max)** |
| 5 | 100 | 6.5% | 10 | 200 | 12.7% | | | | 57.0 |

**Table 2**

| Internal Vehicle MPE Assessment @ 147.4 MHz | | | | | | | | | | |
|---|---|---|---|---|---|---|---|---|---|---|
| **Antenna Location** | **Antenna** | **Gain (dBi)** | **Meas. Distance (cm)** | **E/H Field** | **Calibration Factor** | **Average over Head, Chest, Lower Trunk Back/Front seats (mW/cm^2)** | | **Initial Power (W)** | **Pwr. Density Calc. (mW/cm^2)** | **Pwr. Density Max Calc. (mW/cm^2)** |
| | | | | | | **Back** | **Front** | | | |
| Roof (cnt) | HAD4007A | 2.15 | Highest Reading | E | 0.88 | 0.319 | 0.120 | 55.8 | 0.160 | 0.16 |
| **Measurement Grid** | | | | | | | | | | |
| **Test Position** | | **% of Control Limit Head** | | **% of Control Limit Chest** | | **% of Control Limit Lower Trunk** | | IEEE Controlled Limit: | | 1.00 |
| Back Seat | | 61.4% | | 24.1% | | 10.2% | | IEEE Uncontrolled Limit: | | 0.20 |
| Front Seat | | 8.4% | | 18.3% | | 9.3% | | | **RF Po (*Max):** | 57.0 |

BS Position 1

**Table 3**

| External Vehicle MPE Assessment @ 155 MHz | | | | | | | | | |
|---|---|---|---|---|---|---|---|---|---|
| **Antenna Location** | **Antenna Model** | **Gain (dBi)** | **Meas. Distance (cm)** | **E/H Field** | **Calibration Factor** | **Average over Body (mW/cm^2)** | **Initial Power (W)** | **Pwr. Density Calc. (mW/cm^2)** | **Pwr. Density Max Calc. (mW/cm^2)** |
| Roof (cnt) | HAD4008A | 2.15 | 90 | E | 0.89 | 0.086 | 55.6 | 0.043 | 0.04 |
| **Measurement Grid** | | | | | | | | | |
| **Test Position** | **Height (cm)** | **% of Control Limit** | **Test Position** | **Height (cm)** | **% of Control Limit** | | | IEEE Controlled Limit | IEEE Uncontrolled Limit |
| 1 | 20 | 4.1% | 6 | 120 | 9.4% | | | 1.00 | 0.20 |
| 2 | 40 | 6.0% | 7 | 140 | 12.5% | | | | |
| 3 | 60 | 5.8% | 8 | 160 | 11.9% | | | | |
| 4 | 80 | 5.4% | 9 | 180 | 12.2% | | | | **RF Po (*Max)** |
| 5 | 100 | 6.0% | 10 | 200 | 12.5% | | | | 57.0 |

## Mobile VHF M20KTS9PW1AN tables of raw measurement grid test results

**Table 4**

| Internal Vehicle MPE Assessment @ 155 MHz | | | | | | | | | | |
|---|---|---|---|---|---|---|---|---|---|---|
| Antenna Location | Antenna | Gain (dBi) | Meas. Distance (cm) | E/H Field | Calibration Factor | Average over Head, Chest, Lower Trunk Back/Front seats (mW/cm^2) Back | Front | Initial Power (W) | Pwr. Density Calc. (mW/cm^2) | Pwr. Density Max Calc. (mW/cm^2) |
| Roof (cnt) | HAD4008A | 2.15 | Highest Reading | E | 0.89 | 0.254 | 0.115 | 55.6 | 0.127 | 0.13 |
| Measurement Grid | | | | | | | | | | |
| Test Position | | % of Control Limit Head | | % of Control Limit Chest | | % of Control Limit Lower Trunk | | IEEE Controlled Limit: | | 1.00 |
| Back Seat | | 40.6% | | 22.6% | | 12.9% | | IEEE Uncontrolled Limit: | | 0.20 |
| Front Seat | | 9.6% | | 11.7% | | 13.2% | | | RF Po (*Max): | 57.0 |

BS Position 1

**Table 5**

| External Vehicle MPE Assessment @ 173.9875 MHz | | | | | | | | | |
|---|---|---|---|---|---|---|---|---|---|
| Antenna Location | Antenna Model | Gain (dBi) | Meas. Distance (cm) | E/H Field | Calibration Factor | Average over Body (mW/cm^2) | Initial Power (W) | Pwr. Density Calc. (mW/cm^2) | Pwr. Density Max Calc. (mW/cm^2) |
| Roof (cnt) | HAD4009A | 2.15 | 90 | E | 0.92 | 0.044 | 55.8 | 0.022 | 0.02 |
| Measurement Grid | | | | | | | | | |
| Test Position | Height (cm) | % of Control Limit | Test Position | Height (cm) | % of Control Limit | | | IEEE Controlled Limit | IEEE Uncontrolled Limit |
| 1 | 20 | 3.3% | 6 | 120 | 4.4% | | | 1.00 | 0.20 |
| 2 | 40 | 4.0% | 7 | 140 | 5.7% | | | | |
| 3 | 60 | 6.0% | 8 | 160 | 5.0% | | | | |
| 4 | 80 | 5.1% | 9 | 180 | 3.6% | | | | RF Po (*Max) |
| 5 | 100 | 3.9% | 10 | 200 | 2.8% | | | | 57.0 |

**Table 6**

| Internal Vehicle MPE Assessment @ 173.9875 MHz | | | | | | | | | | |
|---|---|---|---|---|---|---|---|---|---|---|
| Antenna Location | Antenna | Gain (dBi) | Meas. Distance (cm) | E/H Field | Calibration Factor | Average over Head, Chest, Lower Trunk Back/Front seats (mW/cm^2) Back | Front | Initial Power (W) | Pwr. Density Calc. (mW/cm^2) | Pwr. Density Max Calc. (mW/cm^2) |
| Roof (cnt) | HAD4009A | 2.15 | Highest Reading | E | 0.92 | 0.065 | 0.028 | 55.8 | 0.032 | 0.03 |
| Measurement Grid | | | | | | | | | | |
| Test Position | | % of Control Limit Head | | % of Control Limit Chest | | % of Control Limit Lower Trunk | | IEEE Controlled Limit: | | 1.00 |
| Back Seat | | 9.2% | | 4.3% | | 5.9% | | IEEE Uncontrolled Limit: | | 0.20 |
| Front Seat | | 4.1% | | 2.5% | | 1.7% | | | RF Po (*Max): | 57.0 |

## Mobile VHF M20KTS9PW1AN tables of raw measurement grid test results

BS Position 2

**Table 7**

| External Vehicle MPE Assessment @ 147.4 MHz | | | | | | | | | |
|---|---|---|---|---|---|---|---|---|---|
| **Antenna Location** | **Antenna Model** | **Gain (dBi)** | **Meas. Distance (cm)** | **E/H Field** | **Calibration Factor** | **Average over Body (mW/cm^2)** | **Initial Power (W)** | **Pwr. Density Calc. (mW/cm^2)** | **Pwr. Density Max Calc. (mW/cm^2)** |
| Roof (cnt) | HAD4007A | 2.15 | 90 | E | 0.88 | 0.136 | 55.8 | 0.068 | 0.07 |
| **Measurement Grid** | | | | | | | | | |
| **Test Position** | **Height (cm)** | **% of Control Limit** | **Test Position** | **Height (cm)** | **% of Control Limit** | | | IEEE Controlled Limit | IEEE Uncontrolled Limit |
| 1 | 20 | 4.4% | 6 | 120 | 15.1% | | | 1.00 | 0.20 |
| 2 | 40 | 6.7% | 7 | 140 | 18.1% | | | | |
| 3 | 60 | 12.3% | 8 | 160 | 19.8% | | | | |
| 4 | 80 | 9.1% | 9 | 180 | 20.7% | | | | **RF Po (*Max)** |
| 5 | 100 | 12.3% | 10 | 200 | 17.9% | | | | 57.0 |

BS Position 2

**Table 8**

| External Vehicle MPE Assessment @ 155 MHz | | | | | | | | | |
|---|---|---|---|---|---|---|---|---|---|
| **Antenna Location** | **Antenna Model** | **Gain (dBi)** | **Meas. Distance (cm)** | **E/H Field** | **Calibration Factor** | **Average over Body (mW/cm^2)** | **Initial Power (W)** | **Pwr. Density Calc. (mW/cm^2)** | **Pwr. Density Max Calc. (mW/cm^2)** |
| Roof (cnt) | HAD4008A | 2.15 | 90 | E | 0.89 | 0.137 | 55.6 | 0.068 | 0.07 |
| **Measurement Grid** | | | | | | | | | |
| **Test Position** | **Height (cm)** | **% of Control Limit** | **Test Position** | **Height (cm)** | **% of Control Limit** | | | IEEE Controlled Limit | IEEE Uncontrolled Limit |
| 1 | 20 | 5.5% | 6 | 120 | 16.4% | | | 1.00 | 0.20 |
| 2 | 40 | 7.9% | 7 | 140 | 19.5% | | | | |
| 3 | 60 | 9.5% | 8 | 160 | 20.5% | | | | |
| 4 | 80 | 9.7% | 9 | 180 | 18.3% | | | | **RF Po (*Max)** |
| 5 | 100 | 12.3% | 10 | 200 | 16.9% | | | | 57.0 |

BS Position 2

**Table 9**

| External Vehicle MPE Assessment @ 173.9875 MHz | | | | | | | | | |
|---|---|---|---|---|---|---|---|---|---|
| **Antenna Location** | **Antenna Model** | **Gain (dBi)** | **Meas. Distance (cm)** | **E/H Field** | **Calibration Factor** | **Average over Body (mW/cm^2)** | **Initial Power (W)** | **Pwr. Density Calc. (mW/cm^2)** | **Pwr. Density Max Calc. (mW/cm^2)** |
| Roof (cnt) | HAD4009A | 2.15 | 90 | E | 0.92 | 0.049 | 55.8 | 0.024 | 0.02 |
| **Measurement Grid** | | | | | | | | | |
| **Test Position** | **Height (cm)** | **% of Control Limit** | **Test Position** | **Height (cm)** | **% of Control Limit** | | | IEEE Controlled Limit | IEEE Uncontrolled Limit |
| 1 | 20 | 2.5% | 6 | 120 | 6.0% | | | 1.00 | 0.20 |
| 2 | 40 | 3.5% | 7 | 140 | 8.0% | | | | |
| 3 | 60 | 3.5% | 8 | 160 | 7.7% | | | | |
| 4 | 80 | 3.4% | 9 | 180 | 5.3% | | | | **RF Po (*Max)** |
| 5 | 100 | 4.8% | 10 | 200 | 4.0% | | | | 57.0 |

## Mobile VHF M20KTS9PW1AN tables of raw measurement grid test results

BS Position 3

**Table 10**

| External Vehicle MPE Assessment @ 147.4 MHz | | | | | | | | | |
|---|---|---|---|---|---|---|---|---|---|
| **Antenna Location** | **Antenna Model** | **Gain (dBi)** | **Meas. Distance (cm)** | **E/H Field** | **Calibration Factor** | **Average over Body (mW/cm^2)** | **Initial Power (W)** | **Pwr. Density Calc. (mW/cm^2)** | **Pwr. Density Max Calc. (mW/cm^2)** |
| Roof (cnt) | HAD4007A | 2.15 | 90 | E | 0.88 | 0.106 | 55.6 | 0.053 | 0.05 |
| **Measurement Grid** | | | | | | | | | |
| **Test Position** | **Height (cm)** | **% of Control Limit** | **Test Position** | **Height (cm)** | **% of Control Limit** | | | IEEE Controlled Limit | IEEE Uncontrolled Limit |
| 1 | 20 | 4.3% | 6 | 120 | 11.7% | | | 1.00 | 0.20 |
| 2 | 40 | 5.1% | 7 | 140 | 15.6% | | | | |
| 3 | 60 | 5.8% | 8 | 160 | 15.9% | | | | |
| 4 | 80 | 6.9% | 9 | 180 | 17.1% | | | | **RF Po (*Max)** |
| 5 | 100 | 9.9% | 10 | 200 | 13.5% | | | | 57.0 |

BS Position 3

**Table 11**

| External Vehicle MPE Assessment @ 155 MHz | | | | | | | | | |
|---|---|---|---|---|---|---|---|---|---|
| **Antenna Location** | **Antenna Model** | **Gain (dBi)** | **Meas. Distance (cm)** | **E/H Field** | **Calibration Factor** | **Average over Body (mW/cm^2)** | **Initial Power (W)** | **Pwr. Density Calc. (mW/cm^2)** | **Pwr. Density Max Calc. (mW/cm^2)** |
| Roof (cnt) | HAD4008A | 2.15 | 90 | E | 0.89 | 0.098 | 55.6 | 0.049 | 0.05 |
| **Measurement Grid** | | | | | | | | | |
| **Test Position** | **Height (cm)** | **% of Control Limit** | **Test Position** | **Height (cm)** | **% of Control Limit** | | | IEEE Controlled Limit | IEEE Uncontrolled Limit |
| 1 | 20 | 3.4% | 6 | 120 | 12.8% | | | 1.00 | 0.20 |
| 2 | 40 | 5.4% | 7 | 140 | 13.9% | | | | |
| 3 | 60 | 8.3% | 8 | 160 | 12.9% | | | | |
| 4 | 80 | 7.6% | 9 | 180 | 12.4% | | | | **RF Po (*Max)** |
| 5 | 100 | 10.2% | 10 | 200 | 10.9% | | | | 57.0 |

BS Position 3

**Table 12**

| External Vehicle MPE Assessment @ 173.9875 MHz | | | | | | | | | |
|---|---|---|---|---|---|---|---|---|---|
| **Antenna Location** | **Antenna Model** | **Gain (dBi)** | **Meas. Distance (cm)** | **E/H Field** | **Calibration Factor** | **Average over Body (mW/cm^2)** | **Initial Power (W)** | **Pwr. Density Calc. (mW/cm^2)** | **Pwr. Density Max Calc. (mW/cm^2)** |
| Roof (cnt) | HAD4009A | 2.15 | 90 | E | 0.92 | 0.045 | 55.8 | 0.023 | 0.02 |
| **Measurement Grid** | | | | | | | | | |
| **Test Position** | **Height (cm)** | **% of Control Limit** | **Test Position** | **Height (cm)** | **% of Control Limit** | | | IEEE Controlled Limit | IEEE Uncontrolled Limit |
| 1 | 20 | 2.0% | 6 | 120 | 5.9% | | | 1.00 | 0.20 |
| 2 | 40 | 4.0% | 7 | 140 | 6.0% | | | | |
| 3 | 60 | 4.3% | 8 | 160 | 5.6% | | | | |
| 4 | 80 | 4.3% | 9 | 180 | 4.3% | | | | **RF Po (*Max)** |
| 5 | 100 | 5.6% | 10 | 200 | 3.2% | | | | 57.0 |

## Mobile VHF M20KTS9PW1AN tables of raw measurement grid test results

BS Position 4

**Table 13**

| External Vehicle MPE Assessment @ 147.4 MHz | | | | | | | | | |
|---|---|---|---|---|---|---|---|---|---|
| **Antenna Location** | **Antenna Model** | **Gain (dBi)** | **Meas. Distance (cm)** | **E/H Field** | **Calibration Factor** | **Average over Body (mW/cm^2)** | **Initial Power (W)** | **Pwr. Density Calc. (mW/cm^2)** | **Pwr. Density Max Calc. (mW/cm^2)** |
| Roof (cnt) | HAD4007A | 2.15 | 90 | E | 0.88 | 0.081 | 55.8 | 0.041 | 0.04 |
| **Measurement Grid** | | | | | | | | | |
| **Test Position** | **Height (cm)** | **% of Control Limit** | **Test Position** | **Height (cm)** | **% of Control Limit** | | | IEEE Controlled Limit | IEEE Uncontrolled Limit |
| 1 | 20 | 2.3% | 6 | 120 | 9.8% | | | 1.00 | 0.20 |
| 2 | 40 | 3.4% | 7 | 140 | 12.3% | | | | |
| 3 | 60 | 4.8% | 8 | 160 | 13.0% | | | | |
| 4 | 80 | 7.1% | 9 | 180 | 11.3% | | | | **RF Po (*Max)** |
| 5 | 100 | 7.9% | 10 | 200 | 9.1% | | | | 57.0 |

BS Position 4

**Table 14**

| External Vehicle MPE Assessment @ 155 MHz | | | | | | | | | |
|---|---|---|---|---|---|---|---|---|---|
| **Antenna Location** | **Antenna Model** | **Gain (dBi)** | **Meas. Distance (cm)** | **E/H Field** | **Calibration Factor** | **Average over Body (mW/cm^2)** | **Initial Power (W)** | **Pwr. Density Calc. (mW/cm^2)** | **Pwr. Density Max Calc. (mW/cm^2)** |
| Roof (cnt) | HAD4008A | 2.15 | 90 | E | 0.89 | 0.091 | 55.6 | 0.045 | 0.05 |
| **Measurement Grid** | | | | | | | | | |
| **Test Position** | **Height (cm)** | **% of Control Limit** | **Test Position** | **Height (cm)** | **% of Control Limit** | | | IEEE Controlled Limit | IEEE Uncontrolled Limit |
| 1 | 20 | 3.8% | 6 | 120 | 9.8% | | | 1.00 | 0.20 |
| 2 | 40 | 5.4% | 7 | 140 | 13.1% | | | | |
| 3 | 60 | 6.8% | 8 | 160 | 13.5% | | | | |
| 4 | 80 | 7.9% | 9 | 180 | 11.4% | | | | **RF Po (*Max)** |
| 5 | 100 | 10.0% | 10 | 200 | 8.9% | | | | 57.0 |

BS Position 4

**Table 15**

| External Vehicle MPE Assessment @ 173.9875 MHz | | | | | | | | | |
|---|---|---|---|---|---|---|---|---|---|
| **Antenna Location** | **Antenna Model** | **Gain (dBi)** | **Meas. Distance (cm)** | **E/H Field** | **Calibration Factor** | **Average over Body (mW/cm^2)** | **Initial Power (W)** | **Pwr. Density Calc. (mW/cm^2)** | **Pwr. Density Max Calc. (mW/cm^2)** |
| Roof (cnt) | HAD4009A | 2.15 | 90 | E | 0.92 | 0.038 | 55.8 | 0.019 | 0.02 |
| **Measurement Grid** | | | | | | | | | |
| **Test Position** | **Height (cm)** | **% of Control Limit** | **Test Position** | **Height (cm)** | **% of Control Limit** | | | IEEE Controlled Limit | IEEE Uncontrolled Limit |
| 1 | 20 | 2.2% | 6 | 120 | 4.3% | | | 1.00 | 0.20 |
| 2 | 40 | 2.9% | 7 | 140 | 5.4% | | | | |
| 3 | 60 | 3.9% | 8 | 160 | 4.5% | | | | |
| 4 | 80 | 3.5% | 9 | 180 | 4.5% | | | | **RF Po (*Max)** |
| 5 | 100 | 3.7% | 10 | 200 | 3.0% | | | | 57.0 |

## Mobile VHF M20KTS9PW1AN tables of raw measurement grid test results

BS Position 5

**Table 16**

| External Vehicle MPE Assessment @ 147.4 MHz | | | | | | | | | |
|---|---|---|---|---|---|---|---|---|---|
| **Antenna Location** | **Antenna Model** | **Gain (dBi)** | **Meas. Distance (cm)** | **E/H Field** | **Calibration Factor** | **Average over Body (mW/cm^2)** | **Initial Power (W)** | **Pwr. Density Calc. (mW/cm^2)** | **Pwr. Density Max Calc. (mW/cm^2)** |
| Roof (cnt) | HAD4007A | 2.15 | 90 | E | 0.88 | 0.058 | 55.8 | 0.029 | 0.03 |
| **Measurement Grid** | | | | | | | | | |
| **Test Position** | **Height (cm)** | **% of Control Limit** | **Test Position** | **Height (cm)** | **% of Control Limit** | | | IEEE Controlled Limit | IEEE Uncontrolled Limit |
| 1 | 20 | 3.2% | 6 | 120 | 5.5% | | | 1.00 | 0.20 |
| 2 | 40 | 6.2% | 7 | 140 | 6.6% | | | | |
| 3 | 60 | 6.5% | 8 | 160 | 7.7% | | | | |
| 4 | 80 | 5.5% | 9 | 180 | 6.1% | | | | **RF Po (*Max)** |
| 5 | 100 | 5.3% | 10 | 200 | 5.7% | | | | 57.0 |

BS Position 5

**Table 17**

| External Vehicle MPE Assessment @ 155 MHz | | | | | | | | | |
|---|---|---|---|---|---|---|---|---|---|
| **Antenna Location** | **Antenna Model** | **Gain (dBi)** | **Meas. Distance (cm)** | **E/H Field** | **Calibration Factor** | **Average over Body (mW/cm^2)** | **Initial Power (W)** | **Pwr. Density Calc. (mW/cm^2)** | **Pwr. Density Max Calc. (mW/cm^2)** |
| Roof (cnt) | HAD4008A | 2.15 | 90 | E | 0.89 | 0.070 | 55.6 | 0.035 | 0.04 |
| **Measurement Grid** | | | | | | | | | |
| **Test Position** | **Height (cm)** | **% of Control Limit** | **Test Position** | **Height (cm)** | **% of Control Limit** | | | IEEE Controlled Limit | IEEE Uncontrolled Limit |
| 1 | 20 | 5.5% | 6 | 120 | 6.9% | | | 1.00 | 0.20 |
| 2 | 40 | 6.3% | 7 | 140 | 7.8% | | | | |
| 3 | 60 | 7.8% | 8 | 160 | 8.6% | | | | |
| 4 | 80 | 6.0% | 9 | 180 | 7.5% | | | | **RF Po (*Max)** |
| 5 | 100 | 7.6% | 10 | 200 | 6.4% | | | | 57.0 |

BS Position 5

**Table 18**

| External Vehicle MPE Assessment @ 173.9875 MHz | | | | | | | | | |
|---|---|---|---|---|---|---|---|---|---|
| **Antenna Location** | **Antenna Model** | **Gain (dBi)** | **Meas. Distance (cm)** | **E/H Field** | **Calibration Factor** | **Average over Body (mW/cm^2)** | **Initial Power (W)** | **Pwr. Density Calc. (mW/cm^2)** | **Pwr. Density Max Calc. (mW/cm^2)** |
| Roof (cnt) | HAD4009A | 2.15 | 90 | E | 0.92 | 0.044 | 55.8 | 0.022 | 0.02 |
| **Measurement Grid** | | | | | | | | | |
| **Test Position** | **Height (cm)** | **% of Control Limit** | **Test Position** | **Height (cm)** | **% of Control Limit** | | | IEEE Controlled Limit | IEEE Uncontrolled Limit |
| 1 | 20 | 2.7% | 6 | 120 | 4.4% | | | 1.00 | 0.20 |
| 2 | 40 | 3.3% | 7 | 140 | 6.6% | | | | |
| 3 | 60 | 5.1% | 8 | 160 | 4.6% | | | | |
| 4 | 80 | 4.6% | 9 | 180 | 3.7% | | | | **RF Po (*Max)** |
| 5 | 100 | 5.9% | 10 | 200 | 2.7% | | | | 57.0 |

## Mobile VHF M20KTS9PW1AN tables of raw measurement grid test results

BS Position 1

**Table 19**

| External Vehicle MPE Assessment @ 147.4 MHz | | | | | | | | | |
|---|---|---|---|---|---|---|---|---|---|
| **Antenna Location** | **Antenna Model** | **Gain (dBi)** | **Meas. Distance (cm)** | **E/H Field** | **Calibration Factor** | **Average over Body (mW/cm^2)** | **Initial Power (W)** | **Pwr. Density Calc. (mW/cm^2)** | **Pwr. Density Max Calc. (mW/cm^2)** |
| Roof (cnt) | HAD4007A | 2.15 | 90 | H | 0.86 | 0.046 | 55.8 | 0.023 | 0.02 |
| **Measurement Grid** | | | | | | | | | |
| **Test Position** | **Height (cm)** | **% of Control Limit** | **Test Position** | **Height (cm)** | **% of Control Limit** | | | IEEE Controlled Limit | IEEE Uncontrolled Limit |
| 1 | 20 | 1.3% | 6 | 120 | 7.1% | | | 1.00 | 0.20 |
| 2 | 40 | 0.8% | 7 | 140 | 7.7% | | | | |
| 3 | 60 | 1.7% | 8 | 160 | 7.0% | | | | |
| 4 | 80 | 2.1% | 9 | 180 | 7.4% | | | | **RF Po (*Max)** |
| 5 | 100 | 4.6% | 10 | 200 | 6.7% | | | | 57.0 |

**Table 20**

| Internal Vehicle MPE Assessment @ 147.4 MHz | | | | | | | | | | |
|---|---|---|---|---|---|---|---|---|---|---|
| **Antenna Location** | **Antenna** | **Gain (dBi)** | **Meas. Distance (cm)** | **E/H Field** | **Calibration Factor** | **Average over Head, Chest, Lower Trunk Back/Front seats (mW/cm^2)** | | **Initial Power (W)** | **Pwr. Density Calc. (mW/cm^2)** | **Pwr. Density Max Calc. (mW/cm^2)** |
| | | | | | | **Back** | **Front** | | | |
| Roof (cnt) | HAD4007A | 2.15 | Highest Reading | H | 0.86 | 0.142 | 0.146 | 55.8 | 0.073 | 0.07 |
| **Measurement Grid** | | | | | | | | | | |
| **Test Position** | | **% of Control Limit Head** | | **% of Control Limit Chest** | | **% of Control Limit Lower Trunk** | | IEEE Controlled Limit: | | 1.00 |
| Back Seat | | 26.7% | | 6.8% | | 9.2% | | IEEE Uncontrolled Limit: | | 0.20 |
| Front Seat | | 21.3% | | 15.5% | | 6.9% | | | **RF Po (*Max):** | 57.0 |

BS Position 1

**Table 21**

| External Vehicle MPE Assessment @ 155 MHz | | | | | | | | | |
|---|---|---|---|---|---|---|---|---|---|
| **Antenna Location** | **Antenna Model** | **Gain (dBi)** | **Meas. Distance (cm)** | **E/H Field** | **Calibration Factor** | **Average over Body (mW/cm^2)** | **Initial Power (W)** | **Pwr. Density Calc. (mW/cm^2)** | **Pwr. Density Max Calc. (mW/cm^2)** |
| Roof (cnt) | HAD4008A | 2.15 | 90 | H | 0.89 | 0.053 | 55.6 | 0.026 | 0.03 |
| **Measurement Grid** | | | | | | | | | |
| **Test Position** | **Height (cm)** | **% of Control Limit** | **Test Position** | **Height (cm)** | **% of Control Limit** | | | IEEE Controlled Limit | IEEE Uncontrolled Limit |
| 1 | 20 | 2.6% | 6 | 120 | 7.6% | | | 1.00 | 0.20 |
| 2 | 40 | 1.1% | 7 | 140 | 7.4% | | | | |
| 3 | 60 | 1.5% | 8 | 160 | 7.3% | | | | |
| 4 | 80 | 3.2% | 9 | 180 | 8.2% | | | | **RF Po (*Max)** |
| 5 | 100 | 5.7% | 10 | 200 | 8.0% | | | | 57.0 |

## Mobile VHF M20KTS9PW1AN tables of raw measurement grid test results

**Table 22**

| Internal Vehicle MPE Assessment @ 155 MHz | | | | | | | | | | |
|---|---|---|---|---|---|---|---|---|---|---|
| Antenna Location | Antenna | Gain (dBi) | Meas. Distance (cm) | E/H Field | Calibration Factor | Average over Head, Chest, Lower Trunk Back/Front seats (mW/cm^2) Back | Front | Initial Power (W) | Pwr. Density Calc. (mW/cm^2) | Pwr. Density Max Calc. (mW/cm^2) |
| Roof (cnt) | HAD4008A | 2.15 | Highest Reading | H | 0.89 | 0.116 | 0.116 | 55.6 | 0.058 | 0.06 |
| Measurement Grid | | | | | | | | | | |
| Test Position | | % of Control Limit Head | | % of Control Limit Chest | | % of Control Limit Lower Trunk | | IEEE Controlled Limit: | | 1.00 |
| Back Seat | | 22.2% | | 7.0% | | 5.6% | | IEEE Uncontrolled Limit: | | 0.20 |
| Front Seat | | 21.1% | | 11.5% | | 2.2% | | | RF Po (*Max): | 57.0 |

BS Position 1

**Table 23**

| External Vehicle MPE Assessment @ 173.9875 MHz | | | | | | | | | |
|---|---|---|---|---|---|---|---|---|---|
| Antenna Location | Antenna Model | Gain (dBi) | Meas. Distance (cm) | E/H Field | Calibration Factor | Average over Body (mW/cm^2) | Initial Power (W) | Pwr. Density Calc. (mW/cm^2) | Pwr. Density Max Calc. (mW/cm^2) |
| Roof (cnt) | HAD4009A | 2.15 | 90 | H | 0.95 | 0.054 | 55.8 | 0.027 | 0.03 |
| Measurement Grid | | | | | | | | | |
| Test Position | Height (cm) | % of Control Limit | | Test Position | Height (cm) | % of Control Limit | | IEEE Controlled Limit | IEEE Uncontrolled Limit |
| 1 | 20 | 2.9% | | 6 | 120 | 5.7% | | 1.00 | 0.20 |
| 2 | 40 | 3.6% | | 7 | 140 | 7.2% | | | |
| 3 | 60 | 6.6% | | 8 | 160 | 5.2% | | | |
| 4 | 80 | 7.3% | | 9 | 180 | 5.6% | | | RF Po (*Max) |
| 5 | 100 | 6.8% | | 10 | 200 | 3.4% | | | 57.0 |

**Table 24**

| Internal Vehicle MPE Assessment @ 173.9875 MHz | | | | | | | | | | |
|---|---|---|---|---|---|---|---|---|---|---|
| Antenna Location | Antenna | Gain (dBi) | Meas. Distance (cm) | E/H Field | Calibration Factor | Average over Head, Chest, Lower Trunk Back/Front seats (mW/cm^2) Back | Front | Initial Power (W) | Pwr. Density Calc. (mW/cm^2) | Pwr. Density Max Calc. (mW/cm^2) |
| Roof (cnt) | HAD4009A | 2.15 | Highest Reading | H | 0.95 | 0.085 | 0.041 | 55.8 | 0.042 | 0.04 |
| Measurement Grid | | | | | | | | | | |
| Test Position | | % of Control Limit Head | | % of Control Limit Chest | | % of Control Limit Lower Trunk | | IEEE Controlled Limit: | | 1.00 |
| Back Seat | | 9.1% | | 8.8% | | 7.5% | | IEEE Uncontrolled Limit: | | 0.20 |
| Front Seat | | 6.7% | | 3.7% | | 1.9% | | | RF Po (*Max): | 57.0 |

## Mobile VHF M20KTS9PW1AN tables of raw measurement grid test results

BS Position 2

**Table 25**

| External Vehicle MPE Assessment @ 147.4 MHz | | | | | | | | | |
|---|---|---|---|---|---|---|---|---|---|
| **Antenna Location** | **Antenna Model** | **Gain (dBi)** | **Meas. Distance (cm)** | **E/H Field** | **Calibration Factor** | **Average over Body (mW/cm^2)** | **Initial Power (W)** | **Pwr. Density Calc. (mW/cm^2)** | **Pwr. Density Max Calc. (mW/cm^2)** |
| Roof (cnt) | HAD4007A | 2.15 | 90 | H | 0.86 | 0.094 | 55.8 | 0.047 | 0.05 |
| **Measurement Grid** | | | | | | | | | |
| **Test Position** | **Height (cm)** | **% of Control Limit** | **Test Position** | **Height (cm)** | **% of Control Limit** | | | IEEE Controlled Limit | IEEE Uncontrolled Limit |
| 1 | 20 | 5.4% | 6 | 120 | 13.1% | | | 1.00 | 0.20 |
| 2 | 40 | 6.1% | 7 | 140 | 12.5% | | | | |
| 3 | 60 | 6.6% | 8 | 160 | 12.4% | | | | |
| 4 | 80 | 7.7% | 9 | 180 | 11.0% | | | | **RF Po (*Max)** |
| 5 | 100 | 11.1% | 10 | 200 | 8.1% | | | | 57.0 |

BS Position 2

**Table 26**

| External Vehicle MPE Assessment @ 155 MHz | | | | | | | | | |
|---|---|---|---|---|---|---|---|---|---|
| **Antenna Location** | **Antenna Model** | **Gain (dBi)** | **Meas. Distance (cm)** | **E/H Field** | **Calibration Factor** | **Average over Body (mW/cm^2)** | **Initial Power (W)** | **Pwr. Density Calc. (mW/cm^2)** | **Pwr. Density Max Calc. (mW/cm^2)** |
| Roof (cnt) | HAD4008A | 2.15 | 90 | H | 0.89 | 0.084 | 55.6 | 0.042 | 0.04 |
| **Measurement Grid** | | | | | | | | | |
| **Test Position** | **Height (cm)** | **% of Control Limit** | **Test Position** | **Height (cm)** | **% of Control Limit** | | | IEEE Controlled Limit | IEEE Uncontrolled Limit |
| 1 | 20 | 6.0% | 6 | 120 | 11.6% | | | 1.00 | 0.20 |
| 2 | 40 | 5.3% | 7 | 140 | 10.0% | | | | |
| 3 | 60 | 6.6% | 8 | 160 | 9.7% | | | | |
| 4 | 80 | 7.3% | 9 | 180 | 9.1% | | | | **RF Po (*Max)** |
| 5 | 100 | 10.6% | 10 | 200 | 7.4% | | | | 57.0 |

BS Position 2

**Table 27**

| External Vehicle MPE Assessment @ 173.9875 MHz | | | | | | | | | |
|---|---|---|---|---|---|---|---|---|---|
| **Antenna Location** | **Antenna Model** | **Gain (dBi)** | **Meas. Distance (cm)** | **E/H Field** | **Calibration Factor** | **Average over Body (mW/cm^2)** | **Initial Power (W)** | **Pwr. Density Calc. (mW/cm^2)** | **Pwr. Density Max Calc. (mW/cm^2)** |
| Roof (cnt) | HAD4009A | 2.15 | 90 | H | 0.95 | 0.064 | 55.8 | 0.032 | 0.03 |
| **Measurement Grid** | | | | | | | | | |
| **Test Position** | **Height (cm)** | **% of Control Limit** | **Test Position** | **Height (cm)** | **% of Control Limit** | | | IEEE Controlled Limit | IEEE Uncontrolled Limit |
| 1 | 20 | 5.7% | 6 | 120 | 6.9% | | | 1.00 | 0.20 |
| 2 | 40 | 6.2% | 7 | 140 | 6.2% | | | | |
| 3 | 60 | 7.0% | 8 | 160 | 6.6% | | | | |
| 4 | 80 | 8.1% | 9 | 180 | 5.4% | | | | **RF Po (*Max)** |
| 5 | 100 | 8.0% | 10 | 200 | 4.0% | | | | 57.0 |

## Mobile VHF M20KTS9PW1AN tables of raw measurement grid test results

BS Position 3

**Table 28**

| External Vehicle MPE Assessment @ 147.4 MHz | | | | | | | | | |
|---|---|---|---|---|---|---|---|---|---|
| **Antenna Location** | **Antenna Model** | **Gain (dBi)** | **Meas. Distance (cm)** | **E/H Field** | **Calibration Factor** | **Average over Body (mW/cm^2)** | **Initial Power (W)** | **Pwr. Density Calc. (mW/cm^2)** | **Pwr. Density Max Calc. (mW/cm^2)** |
| Roof (cnt) | HAD4007A | 2.15 | 90 | H | 0.86 | 0.105 | 55.8 | 0.053 | 0.05 |
| **Measurement Grid** | | | | | | | | | |
| **Test Position** | **Height (cm)** | **% of Control Limit** | **Test Position** | **Height (cm)** | **% of Control Limit** | | | IEEE Controlled Limit | IEEE Uncontrolled Limit |
| 1 | 20 | 5.1% | 6 | 120 | 13.6% | | | 1.00 | 0.20 |
| 2 | 40 | 5.4% | 7 | 140 | 15.6% | | | | |
| 3 | 60 | 9.1% | 8 | 160 | 14.6% | | | | |
| 4 | 80 | 9.6% | 9 | 180 | 11.5% | | | | **RF Po (*Max)** |
| 5 | 100 | 11.8% | 10 | 200 | 9.1% | | | | 57.0 |

BS Position 3

**Table 29**

| External Vehicle MPE Assessment @ 155 MHz | | | | | | | | | |
|---|---|---|---|---|---|---|---|---|---|
| **Antenna Location** | **Antenna Model** | **Gain (dBi)** | **Meas. Distance (cm)** | **E/H Field** | **Calibration Factor** | **Average over Body (mW/cm^2)** | **Initial Power (W)** | **Pwr. Density Calc. (mW/cm^2)** | **Pwr. Density Max Calc. (mW/cm^2)** |
| Roof (cnt) | HAD4008A | 2.15 | 90 | H | 0.89 | 0.121 | 55.6 | 0.060 | 0.06 |
| **Measurement Grid** | | | | | | | | | |
| **Test Position** | **Height (cm)** | **% of Control Limit** | **Test Position** | **Height (cm)** | **% of Control Limit** | | | IEEE Controlled Limit | IEEE Uncontrolled Limit |
| 1 | 20 | 8.2% | 6 | 120 | 16.9% | | | 1.00 | 0.20 |
| 2 | 40 | 9.0% | 7 | 140 | 16.8% | | | | |
| 3 | 60 | 11.7% | 8 | 160 | 13.1% | | | | |
| 4 | 80 | 13.1% | 9 | 180 | 9.5% | | | | **RF Po (*Max)** |
| 5 | 100 | 15.8% | 10 | 200 | 6.8% | | | | 57.0 |

BS Position 3

**Table 30**

| External Vehicle MPE Assessment @ 173.9875 MHz | | | | | | | | | |
|---|---|---|---|---|---|---|---|---|---|
| **Antenna Location** | **Antenna Model** | **Gain (dBi)** | **Meas. Distance (cm)** | **E/H Field** | **Calibration Factor** | **Average over Body (mW/cm^2)** | **Initial Power (W)** | **Pwr. Density Calc. (mW/cm^2)** | **Pwr. Density Max Calc. (mW/cm^2)** |
| Roof (cnt) | HAD4009A | 2.15 | 90 | H | 0.95 | 0.080 | 55.8 | 0.040 | 0.04 |
| **Measurement Grid** | | | | | | | | | |
| **Test Position** | **Height (cm)** | **% of Control Limit** | **Test Position** | **Height (cm)** | **% of Control Limit** | | | IEEE Controlled Limit | IEEE Uncontrolled Limit |
| 1 | 20 | 5.2% | 6 | 120 | 9.4% | | | 1.00 | 0.20 |
| 2 | 40 | 7.3% | 7 | 140 | 9.3% | | | | |
| 3 | 60 | 7.1% | 8 | 160 | 10.2% | | | | |
| 4 | 80 | 8.2% | 9 | 180 | 7.2% | | | | **RF Po (*Max)** |
| 5 | 100 | 9.8% | 10 | 200 | 6.3% | | | | 57.0 |

## Mobile VHF M20KTS9PW1AN tables of raw measurement grid test results

BS Position 4

**Table 31**

| External Vehicle MPE Assessment @ 147.4 MHz | | | | | | | | | |
|---|---|---|---|---|---|---|---|---|---|
| **Antenna Location** | **Antenna Model** | **Gain (dBi)** | **Meas. Distance (cm)** | **E/H Field** | **Calibration Factor** | **Average over Body (mW/cm^2)** | **Initial Power (W)** | **Pwr. Density Calc. (mW/cm^2)** | **Pwr. Density Max Calc. (mW/cm^2)** |
| Roof (cnt) | HAD4007A | 2.15 | 90 | H | 0.86 | 0.117 | 55.8 | 0.059 | 0.06 |
| **Measurement Grid** | | | | | | | | | |
| **Test Position** | **Height (cm)** | **% of Control Limit** | **Test Position** | **Height (cm)** | **% of Control Limit** | | | IEEE Controlled Limit | IEEE Uncontrolled Limit |
| 1 | 20 | 7.5% | 6 | 120 | 16.9% | | | 1.00 | 0.20 |
| 2 | 40 | 10.3% | 7 | 140 | 16.2% | | | | |
| 3 | 60 | 10.5% | 8 | 160 | 12.4% | | | | |
| 4 | 80 | 12.4% | 9 | 180 | 11.5% | | | | **RF Po (*Max)** |
| 5 | 100 | 13.2% | 10 | 200 | 6.3% | | | | 57.0 |

BS Position 4

**Table 32**

| External Vehicle MPE Assessment @ 155 MHz | | | | | | | | | |
|---|---|---|---|---|---|---|---|---|---|
| **Antenna Location** | **Antenna Model** | **Gain (dBi)** | **Meas. Distance (cm)** | **E/H Field** | **Calibration Factor** | **Average over Body (mW/cm^2)** | **Initial Power (W)** | **Pwr. Density Calc. (mW/cm^2)** | **Pwr. Density Max Calc. (mW/cm^2)** |
| Roof (cnt) | HAD4008A | 2.15 | 90 | H | 0.89 | 0.093 | 55.6 | 0.047 | 0.05 |
| **Measurement Grid** | | | | | | | | | |
| **Test Position** | **Height (cm)** | **% of Control Limit** | **Test Position** | **Height (cm)** | **% of Control Limit** | | | IEEE Controlled Limit | IEEE Uncontrolled Limit |
| 1 | 20 | 5.2% | 6 | 120 | 12.5% | | | 1.00 | 0.20 |
| 2 | 40 | 5.8% | 7 | 140 | 12.0% | | | | |
| 3 | 60 | 9.1% | 8 | 160 | 11.1% | | | | |
| 4 | 80 | 9.8% | 9 | 180 | 9.6% | | | | **RF Po (*Max)** |
| 5 | 100 | 12.2% | 10 | 200 | 6.1% | | | | 57.0 |

BS Position 4

**Table 33**

| External Vehicle MPE Assessment @ 173.9875 MHz | | | | | | | | | |
|---|---|---|---|---|---|---|---|---|---|
| **Antenna Location** | **Antenna Model** | **Gain (dBi)** | **Meas. Distance (cm)** | **E/H Field** | **Calibration Factor** | **Average over Body (mW/cm^2)** | **Initial Power (W)** | **Pwr. Density Calc. (mW/cm^2)** | **Pwr. Density Max Calc. (mW/cm^2)** |
| Roof (cnt) | HAD4009A | 2.15 | 90 | H | 0.95 | 0.064 | 55.8 | 0.032 | 0.03 |
| **Measurement Grid** | | | | | | | | | |
| **Test Position** | **Height (cm)** | **% of Control Limit** | **Test Position** | **Height (cm)** | **% of Control Limit** | | | IEEE Controlled Limit | IEEE Uncontrolled Limit |
| 1 | 20 | 4.8% | 6 | 120 | 7.9% | | | 1.00 | 0.20 |
| 2 | 40 | 5.4% | 7 | 140 | 8.2% | | | | |
| 3 | 60 | 5.9% | 8 | 160 | 8.8% | | | | |
| 4 | 80 | 6.3% | 9 | 180 | 4.2% | | | | **RF Po (*Max)** |
| 5 | 100 | 8.7% | 10 | 200 | 3.6% | | | | 57.0 |

## Mobile VHF M20KTS9PW1AN tables of raw measurement grid test results

BS Position 5

**Table 34**

| External Vehicle MPE Assessment @ 147.4 MHz | | | | | | | | | |
|---|---|---|---|---|---|---|---|---|---|
| **Antenna Location** | **Antenna Model** | **Gain (dBi)** | **Meas. Distance (cm)** | **E/H Field** | **Calibration Factor** | **Average over Body (mW/cm^2)** | **Initial Power (W)** | **Pwr. Density Calc. (mW/cm^2)** | **Pwr. Density Max Calc. (mW/cm^2)** |
| Roof (cnt) | HAD4007A | 2.15 | 90 | H | 0.86 | 0.081 | 55.8 | 0.041 | 0.04 |
| **Measurement Grid** | | | | | | | | | |
| **Test Position** | **Height (cm)** | **% of Control Limit** | **Test Position** | **Height (cm)** | **% of Control Limit** | | | IEEE Controlled Limit | IEEE Uncontrolled Limit |
| 1 | 20 | 6.1% | 6 | 120 | 9.7% | | | 1.00 | 0.20 |
| 2 | 40 | 6.2% | 7 | 140 | 9.9% | | | | |
| 3 | 60 | 8.7% | 8 | 160 | 9.2% | | | | |
| 4 | 80 | 9.3% | 9 | 180 | 5.8% | | | | **RF Po (*Max)** |
| 5 | 100 | 9.6% | 10 | 200 | 6.5% | | | | 57.0 |

BS Position 5

**Table 35**

| External Vehicle MPE Assessment @ 155 MHz | | | | | | | | | |
|---|---|---|---|---|---|---|---|---|---|
| **Antenna Location** | **Antenna Model** | **Gain (dBi)** | **Meas. Distance (cm)** | **E/H Field** | **Calibration Factor** | **Average over Body (mW/cm^2)** | **Initial Power (W)** | **Pwr. Density Calc. (mW/cm^2)** | **Pwr. Density Max Calc. (mW/cm^2)** |
| Roof (cnt) | HAD4008A | 2.15 | 90 | H | 0.89 | 0.108 | 55.6 | 0.054 | 0.06 |
| **Measurement Grid** | | | | | | | | | |
| **Test Position** | **Height (cm)** | **% of Control Limit** | **Test Position** | **Height (cm)** | **% of Control Limit** | | | IEEE Controlled Limit | IEEE Uncontrolled Limit |
| 1 | 20 | 7.3% | 6 | 120 | 15.5% | | | 1.00 | 0.20 |
| 2 | 40 | 7.7% | 7 | 140 | 14.2% | | | | |
| 3 | 60 | 9.6% | 8 | 160 | 12.3% | | | | |
| 4 | 80 | 12.5% | 9 | 180 | 8.2% | | | | **RF Po (*Max)** |
| 5 | 100 | 13.1% | 10 | 200 | 7.5% | | | | 57.0 |

BS Position 5

**Table 36**

| External Vehicle MPE Assessment @ 173.9875 MHz | | | | | | | | | |
|---|---|---|---|---|---|---|---|---|---|
| **Antenna Location** | **Antenna Model** | **Gain (dBi)** | **Meas. Distance (cm)** | **E/H Field** | **Calibration Factor** | **Average over Body (mW/cm^2)** | **Initial Power (W)** | **Pwr. Density Calc. (mW/cm^2)** | **Pwr. Density Max Calc. (mW/cm^2)** |
| Roof (cnt) | HAD4009A | 2.15 | 90 | H | 0.95 | 0.103 | 55.8 | 0.052 | 0.05 |
| **Measurement Grid** | | | | | | | | | |
| **Test Position** | **Height (cm)** | **% of Control Limit** | **Test Position** | **Height (cm)** | **% of Control Limit** | | | IEEE Controlled Limit | IEEE Uncontrolled Limit |
| 1 | 20 | 9.1% | 6 | 120 | 12.4% | | | 1.00 | 0.20 |
| 2 | 40 | 8.7% | 7 | 140 | 13.6% | | | | |
| 3 | 60 | 11.3% | 8 | 160 | 13.5% | | | | |
| 4 | 80 | 10.7% | 9 | 180 | 7.2% | | | | **RF Po (*Max)** |
| 5 | 100 | 12.0% | 10 | 200 | 4.8% | | | | 57.0 |

## DQPMDVR7000P - DVR 700 Tables of raw measurement grid test results

BS Position 1

**Table 1**

| External Vehicle MPE Assessment @ 764 MHz | | | | | | | | | |
|---|---|---|---|---|---|---|---|---|---|
| **Antenna Location** | **Antenna Model** | **Gain (dBi)** | **Meas. Distance (cm)** | **E/H Field** | **Calibration Factor** | **Average over Body (mW/cm^2)** | **Initial Power (W)** | **Pwr. Density Calc. (mW/cm^2)** | **Pwr. Density Max Calc. (mW/cm^2)** |
| Trunk (cnt) | HAF4016A | 2.15 | 90 | E | 0.9 | 0.032 | 4.99 | 0.032 | 0.03 |
| **Measurement Grid** | | | | | | | | | |
| **Test Position** | **Height (cm)** | **% of Control Limit** | **Test Position** | **Height (cm)** | **% of Control Limit** | | | IEEE Controlled Limit | IEEE Uncontrolled Limit |
| 1 | 20 | 0.9% | 6 | 120 | 1.0% | | | 2.55 | 0.51 |
| 2 | 40 | 1.2% | 7 | 140 | 1.1% | | | | |
| 3 | 60 | 1.4% | 8 | 160 | 1.3% | | | | |
| 4 | 80 | 1.6% | 9 | 180 | 1.6% | | | | **RF Po (*Max)** |
| 5 | 100 | 1.3% | 10 | 200 | 1.2% | | | | 5.00 |

**Table 2**

| Internal Vehicle MPE Assessment @ 764 MHz | | | | | | | | | | |
|---|---|---|---|---|---|---|---|---|---|---|
| **Antenna Location** | **Antenna** | **Gain (dBi)** | **Meas. Distance (cm)** | **E/H Field** | **Calibration Factor** | **Average over Head, Chest, Lower Trunk Back/Front seats (mW/cm^2)** | | **Initial Power (W)** | **Pwr. Density Calc. (mW/cm^2)** | **Pwr. Density Max Calc. (mW/cm^2)** |
| | | | | | | **Back** | **Front** | | | |
| Trunk (cnt) | HAF4016A | 2.15 | Highest Reading | E | 0.9 | 0.042 | 0.025 | 4.99 | 0.042 | 0.04 |
| **Measurement Grid** | | | | | | | | | | |
| **Test Position** | | **% of Control Limit Head** | | **% of Control Limit Chest** | | **% of Control Limit Lower Trunk** | | IEEE Controlled Limit: | | 2.55 |
| Back Seat | | 1.6% | | 1.7% | | 1.6% | | IEEE Uncontrolled Limit: | | 0.51 |
| Front Seat | | 1.0% | | 1.0% | | 1.0% | | | **RF Po (*Max):** | 5.00 |

BS Position 1

**Table 3**

| External Vehicle MPE Assessment @ 770 MHz | | | | | | | | | |
|---|---|---|---|---|---|---|---|---|---|
| **Antenna Location** | **Antenna Model** | **Gain (dBi)** | **Meas. Distance (cm)** | **E/H Field** | **Calibration Factor** | **Average over Body (mW/cm^2)** | **Initial Power (W)** | **Pwr. Density Calc. (mW/cm^2)** | **Pwr. Density Max Calc. (mW/cm^2)** |
| Trunk (cnt) | HAF4016A | 2.15 | 90 | E | 0.9 | 0.043 | 5.02 | 0.043 | 0.04 |
| **Measurement Grid** | | | | | | | | | |
| **Test Position** | **Height (cm)** | **% of Control Limit** | **Test Position** | **Height (cm)** | **% of Control Limit** | | | IEEE Controlled Limit | IEEE Uncontrolled Limit |
| 1 | 20 | 1.6% | 6 | 120 | 1.6% | | | 2.57 | 0.51 |
| 2 | 40 | 1.4% | 7 | 140 | 2.1% | | | | |
| 3 | 60 | 1.7% | 8 | 160 | 1.6% | | | | |
| 4 | 80 | 2.2% | 9 | 180 | 1.7% | | | | **RF Po (*Max)** |
| 5 | 100 | 1.5% | 10 | 200 | 1.5% | | | | 5.00 |

## DQPMDVR7000P - DVR 700 Tables of raw measurement grid test results

**Table 4**

| Internal Vehicle MPE Assessment @ 770 MHz | | | | | | | | | | |
|---|---|---|---|---|---|---|---|---|---|---|
| Antenna Location | Antenna | Gain (dBi) | Meas. Distance (cm) | E/H Field | Calibration Factor | Average over Head, Chest, Lower Trunk Back/Front seats (mW/cm^2) Back | Front | Initial Power (W) | Pwr. Density Calc. (mW/cm^2) | Pwr. Density Max Calc. (mW/cm^2) |
| Trunk (cnt) | HAF4016A | 2.15 | Highest Reading | E | 0.9 | 0.040 | 0.022 | 5.02 | 0.040 | 0.04 |

| Measurement Grid | | | | | |
|---|---|---|---|---|---|
| Test Position | % of Control Limit Head | % of Control Limit Chest | % of Control Limit Lower Trunk | IEEE Controlled Limit: | 2.57 |
| Back Seat | 1.9% | 1.8% | 1.0% | IEEE Uncontrolled Limit: | 0.51 |
| Front Seat | 1.1% | 0.7% | 0.8% | RF Po (*Max): | 5.00 |

BS Position 1

**Table 5**

| External Vehicle MPE Assessment @ 776 MHz | | | | | | | | | |
|---|---|---|---|---|---|---|---|---|---|
| Antenna Location | Antenna Model | Gain (dBi) | Meas. Distance (cm) | E/H Field | Calibration Factor | Average over Body (mW/cm^2) | Initial Power (W) | Pwr. Density Calc. (mW/cm^2) | Pwr. Density Max Calc. (mW/cm^2) |
| Trunk (cnt) | HAF4016A | 2.15 | 90 | E | 0.9 | 0.051 | 4.97 | 0.051 | 0.05 |

| Measurement Grid | | | | | | | |
|---|---|---|---|---|---|---|---|
| Test Position | Height (cm) | % of Control Limit | Test Position | Height (cm) | % of Control Limit | IEEE Controlled Limit | IEEE Uncontrolled Limit |
| 1 | 20 | 1.5% | 6 | 120 | 2.4% | 2.59 | 0.52 |
| 2 | 40 | 2.0% | 7 | 140 | 2.3% | | |
| 3 | 60 | 2.1% | 8 | 160 | 1.8% | | |
| 4 | 80 | 2.5% | 9 | 180 | 1.5% | | RF Po (*Max) |
| 5 | 100 | 2.1% | 10 | 200 | 1.7% | | 5.00 |

**Table 6**

| Internal Vehicle MPE Assessment @ 776 MHz | | | | | | | | | | |
|---|---|---|---|---|---|---|---|---|---|---|
| Antenna Location | Antenna | Gain (dBi) | Meas. Distance (cm) | E/H Field | Calibration Factor | Average over Head, Chest, Lower Trunk Back/Front seats (mW/cm^2) Back | Front | Initial Power (W) | Pwr. Density Calc. (mW/cm^2) | Pwr. Density Max Calc. (mW/cm^2) |
| Trunk (cnt) | HAF4016A | 2.15 | Highest Reading | E | 0.9 | 0.049 | 0.025 | 4.97 | 0.049 | 0.05 |

| Measurement Grid | | | | | |
|---|---|---|---|---|---|
| Test Position | % of Control Limit Head | % of Control Limit Chest | % of Control Limit Lower Trunk | IEEE Controlled Limit: | 2.59 |
| Back Seat | 2.5% | 2.3% | 0.9% | IEEE Uncontrolled Limit: | 0.52 |
| Front Seat | 1.1% | 0.9% | 0.9% | RF Po (*Max): | 5.00 |

## DQPMDVR7000P - DVR 700 Tables of raw measurement grid test results

BS Position 1

**Table 7**

| External Vehicle MPE Assessment @ 794 MHz | | | | | | | | | |
|---|---|---|---|---|---|---|---|---|---|
| **Antenna Location** | **Antenna Model** | **Gain (dBi)** | **Meas. Distance (cm)** | **E/H Field** | **Calibration Factor** | **Average over Body (mW/cm^2)** | **Initial Power (W)** | **Pwr. Density Calc. (mW/cm^2)** | **Pwr. Density Max Calc. (mW/cm^2)** |
| Trunk (cnt) | HAF4016A | 2.15 | 90 | E | 0.89 | 0.058 | 4.98 | 0.058 | 0.06 |
| **Measurement Grid** | | | | | | | | | |
| **Test Position** | **Height (cm)** | **% of Control Limit** | **Test Position** | **Height (cm)** | **% of Control Limit** | | | IEEE Controlled Limit | IEEE Uncontrolled Limit |
| 1 | 20 | 1.6% | 6 | 120 | 2.3% | | | 2.65 | 0.53 |
| 2 | 40 | 2.3% | 7 | 140 | 3.4% | | | | |
| 3 | 60 | 2.1% | 8 | 160 | 2.4% | | | | |
| 4 | 80 | 2.4% | 9 | 180 | 1.8% | | | | **RF Po (*Max)** |
| 5 | 100 | 2.1% | 10 | 200 | 1.7% | | | | 5.00 |

**Table 8**

| Internal Vehicle MPE Assessment @ 794 MHz | | | | | | | | | | |
|---|---|---|---|---|---|---|---|---|---|---|
| **Antenna Location** | **Antenna** | **Gain (dBi)** | **Meas. Distance (cm)** | **E/H Field** | **Calibration Factor** | **Average over Head, Chest, Lower Trunk Back/Front seats (mW/cm^2)** | | **Initial Power (W)** | **Pwr. Density Calc. (mW/cm^2)** | **Pwr. Density Max Calc. (mW/cm^2)** |
| | | | | | | **Back** | **Front** | | | |
| Trunk (cnt) | HAF4016A | 2.15 | Highest Reading | E | 0.89 | 0.051 | 0.021 | 4.98 | 0.051 | 0.05 |
| **Measurement Grid** | | | | | | | | | | |
| **Test Position** | | **% of Control Limit Head** | | **% of Control Limit Chest** | | **% of Control Limit Lower Trunk** | | IEEE Controlled Limit: | | 2.65 |
| Back Seat | | 2.6% | | 1.8% | | 1.4% | | IEEE Uncontrolled Limit: | | 0.53 |
| Front Seat | | 0.9% | | 0.9% | | 0.6% | | | **RF Po (*Max):** | 5.00 |

BS Position 1

**Table 9**

| External Vehicle MPE Assessment @ 800 MHz | | | | | | | | | |
|---|---|---|---|---|---|---|---|---|---|
| **Antenna Location** | **Antenna Model** | **Gain (dBi)** | **Meas. Distance (cm)** | **E/H Field** | **Calibration Factor** | **Average over Body (mW/cm^2)** | **Initial Power (W)** | **Pwr. Density Calc. (mW/cm^2)** | **Pwr. Density Max Calc. (mW/cm^2)** |
| Trunk (cnt) | HAF4016A | 2.15 | 90 | E | 0.89 | 0.062 | 5.00 | 0.062 | 0.06 |
| **Measurement Grid** | | | | | | | | | |
| **Test Position** | **Height (cm)** | **% of Control Limit** | **Test Position** | **Height (cm)** | **% of Control Limit** | | | IEEE Controlled Limit | IEEE Uncontrolled Limit |
| 1 | 20 | 1.7% | 6 | 120 | 2.8% | | | 2.67 | 0.53 |
| 2 | 40 | 1.7% | 7 | 140 | 3.0% | | | | |
| 3 | 60 | 2.5% | 8 | 160 | 2.2% | | | | |
| 4 | 80 | 2.7% | 9 | 180 | 2.0% | | | | **RF Po (*Max)** |
| 5 | 100 | 2.7% | 10 | 200 | 1.8% | | | | 5.00 |

## DQPMDVR7000P - DVR 700 Tables of raw measurement grid test results

**Table 10**

| Internal Vehicle MPE Assessment @ 800 MHz | | | | | | | | | | |
|---|---|---|---|---|---|---|---|---|---|---|
| Antenna Location | Antenna | Gain (dBi) | Meas. Distance (cm) | E/H Field | Calibration Factor | Average over Head, Chest, Lower Trunk Back/Front seats (mW/cm^2) Back | Front | Initial Power (W) | Pwr. Density Calc. (mW/cm^2) | Pwr. Density Max Calc. (mW/cm^2) |
| Trunk (cnt) | HAF4016A | 2.15 | Highest Reading | E | 0.89 | 0.060 | 0.024 | 5.00 | 0.060 | 0.06 |

| Measurement Grid | | | | | |
|---|---|---|---|---|---|
| Test Position | % of Control Limit Head | % of Control Limit Chest | % of Control Limit Lower Trunk | IEEE Controlled Limit: | 2.67 |
| Back Seat | 3.2% | 1.9% | 1.6% | IEEE Uncontrolled Limit: | 0.53 |
| Front Seat | 0.9% | 1.1% | 0.7% | RF Po (*Max): | 5.00 |

BS Position 1

**Table 11**

| External Vehicle MPE Assessment @ 806 MHz | | | | | | | | | |
|---|---|---|---|---|---|---|---|---|---|
| Antenna Location | Antenna Model | Gain (dBi) | Meas. Distance (cm) | E/H Field | Calibration Factor | Average over Body (mW/cm^2) | Initial Power (W) | Pwr. Density Calc. (mW/cm^2) | Pwr. Density Max Calc. (mW/cm^2) |
| Trunk (cnt) | HAF4016A | 2.15 | 90 | E | 0.89 | 0.069 | 4.98 | 0.069 | 0.07 |

| Measurement Grid | | | | | | | |
|---|---|---|---|---|---|---|---|
| Test Position | Height (cm) | % of Control Limit | Test Position | Height (cm) | % of Control Limit | IEEE Controlled Limit | IEEE Uncontrolled Limit |
| 1 | 20 | 1.7% | 6 | 120 | 3.0% | 2.69 | 0.54 |
| 2 | 40 | 2.6% | 7 | 140 | 3.8% | | |
| 3 | 60 | 2.1% | 8 | 160 | 3.1% | | |
| 4 | 80 | 2.7% | 9 | 180 | 2.0% | | RF Po (*Max) |
| 5 | 100 | 2.9% | 10 | 200 | 1.9% | | 5.00 |

**Table 12**

| Internal Vehicle MPE Assessment @ 806 MHz | | | | | | | | | | |
|---|---|---|---|---|---|---|---|---|---|---|
| Antenna Location | Antenna | Gain (dBi) | Meas. Distance (cm) | E/H Field | Calibration Factor | Average over Head, Chest, Lower Trunk Back/Front seats (mW/cm^2) Back | Front | Initial Power (W) | Pwr. Density Calc. (mW/cm^2) | Pwr. Density Max Calc. (mW/cm^2) |
| Trunk (cnt) | HAF4016A | 2.15 | Highest Reading | E | 0.89 | 0.061 | 0.025 | 4.98 | 0.061 | 0.06 |

| Measurement Grid | | | | | |
|---|---|---|---|---|---|
| Test Position | % of Control Limit Head | % of Control Limit Chest | % of Control Limit Lower Trunk | IEEE Controlled Limit: | 2.69 |
| Back Seat | 2.9% | 2.2% | 1.7% | IEEE Uncontrolled Limit: | 0.54 |
| Front Seat | 1.0% | 1.0% | 0.8% | RF Po (*Max): | 5.00 |

## DQPMDVR7000P - DVR 700 Tables of raw measurement grid test results

BS Position 2

**Table 13**

| External Vehicle MPE Assessment @ 764 MHz | | | | | | | | | |
|---|---|---|---|---|---|---|---|---|---|
| **Antenna Location** | **Antenna Model** | **Gain (dBi)** | **Meas. Distance (cm)** | **E/H Field** | **Calibration Factor** | **Average over Body (mW/cm^2)** | **Initial Power (W)** | **Pwr. Density Calc. (mW/cm^2)** | **Pwr. Density Max Calc. (mW/cm^2)** |
| Trunk (cnt) | HAF4016A | 2.15 | 90 | E | 0.9 | 0.059 | 4.99 | 0.059 | 0.06 |
| **Measurement Grid** | | | | | | | | | |
| **Test Position** | **Height (cm)** | **% of Control Limit** | | **Test Position** | **Height (cm)** | **% of Control Limit** | | IEEE Controlled Limit | IEEE Uncontrolled Limit |
| 1 | 20 | 2.3% | | 6 | 120 | 2.1% | | 2.55 | 0.51 |
| 2 | 40 | 2.0% | | 7 | 140 | 2.9% | | | |
| 3 | 60 | 2.1% | | 8 | 160 | 1.9% | | | |
| 4 | 80 | 3.5% | | 9 | 180 | 1.7% | | | **RF Po (*Max)** |
| 5 | 100 | 2.6% | | 10 | 200 | 2.1% | | | 5.00 |

BS Position 2

**Table 14**

| External Vehicle MPE Assessment @ 770 MHz | | | | | | | | | |
|---|---|---|---|---|---|---|---|---|---|
| **Antenna Location** | **Antenna Model** | **Gain (dBi)** | **Meas. Distance (cm)** | **E/H Field** | **Calibration Factor** | **Average over Body (mW/cm^2)** | **Initial Power (W)** | **Pwr. Density Calc. (mW/cm^2)** | **Pwr. Density Max Calc. (mW/cm^2)** |
| Trunk (cnt) | HAF4016A | 2.15 | 90 | E | 0.9 | 0.062 | 5.02 | 0.062 | 0.06 |
| **Measurement Grid** | | | | | | | | | |
| **Test Position** | **Height (cm)** | **% of Control Limit** | | **Test Position** | **Height (cm)** | **% of Control Limit** | | IEEE Controlled Limit | IEEE Uncontrolled Limit |
| 1 | 20 | 2.1% | | 6 | 120 | 3.2% | | 2.57 | 0.51 |
| 2 | 40 | 2.2% | | 7 | 140 | 3.0% | | | |
| 3 | 60 | 2.4% | | 8 | 160 | 2.2% | | | |
| 4 | 80 | 2.8% | | 9 | 180 | 2.0% | | | **RF Po (*Max)** |
| 5 | 100 | 2.4% | | 10 | 200 | 1.8% | | | 5.00 |

BS Position 2

**Table 15**

| External Vehicle MPE Assessment @ 776 MHz | | | | | | | | | |
|---|---|---|---|---|---|---|---|---|---|
| **Antenna Location** | **Antenna Model** | **Gain (dBi)** | **Meas. Distance (cm)** | **E/H Field** | **Calibration Factor** | **Average over Body (mW/cm^2)** | **Initial Power (W)** | **Pwr. Density Calc. (mW/cm^2)** | **Pwr. Density Max Calc. (mW/cm^2)** |
| Trunk (cnt) | HAF4016A | 2.15 | 90 | E | 0.9 | 0.069 | 4.97 | 0.069 | 0.07 |
| **Measurement Grid** | | | | | | | | | |
| **Test Position** | **Height (cm)** | **% of Control Limit** | | **Test Position** | **Height (cm)** | **% of Control Limit** | | IEEE Controlled Limit | IEEE Uncontrolled Limit |
| 1 | 20 | 2.2% | | 6 | 120 | 3.1% | | 2.59 | 0.52 |
| 2 | 40 | 2.3% | | 7 | 140 | 3.9% | | | |
| 3 | 60 | 2.6% | | 8 | 160 | 2.4% | | | |
| 4 | 80 | 3.4% | | 9 | 180 | 1.9% | | | **RF Po (*Max)** |
| 5 | 100 | 2.8% | | 10 | 200 | 2.0% | | | 5.00 |

## DQPMDVR7000P - DVR 700 Tables of raw measurement grid test results

BS Position 2

**Table 16**

| External Vehicle MPE Assessment @ 794 MHz | | | | | | | | | |
|---|---|---|---|---|---|---|---|---|---|
| **Antenna Location** | **Antenna Model** | **Gain (dBi)** | **Meas. Distance (cm)** | **E/H Field** | **Calibration Factor** | **Average over Body (mW/cm^2)** | **Initial Power (W)** | **Pwr. Density Calc. (mW/cm^2)** | **Pwr. Density Max Calc. (mW/cm^2)** |
| Trunk (cnt) | HAF4016A | 2.15 | 90 | E | 0.89 | 0.066 | 4.98 | 0.066 | 0.07 |
| **Measurement Grid** | | | | | | | | | |
| **Test Position** | **Height (cm)** | **% of Control Limit** | | **Test Position** | **Height (cm)** | **% of Control Limit** | | IEEE Controlled Limit | IEEE Uncontrolled Limit |
| 1 | 20 | 2.2% | | 6 | 120 | 2.7% | | 2.65 | 0.53 |
| 2 | 40 | 2.1% | | 7 | 140 | 3.5% | | | |
| 3 | 60 | 2.9% | | 8 | 160 | 2.5% | | | |
| 4 | 80 | 3.3% | | 9 | 180 | 1.7% | | | **RF Po (*Max)** |
| 5 | 100 | 2.6% | | 10 | 200 | 1.5% | | | 5.00 |

BS Position 2

**Table 17**

| External Vehicle MPE Assessment @ 800 MHz | | | | | | | | | |
|---|---|---|---|---|---|---|---|---|---|
| **Antenna Location** | **Antenna Model** | **Gain (dBi)** | **Meas. Distance (cm)** | **E/H Field** | **Calibration Factor** | **Average over Body (mW/cm^2)** | **Initial Power (W)** | **Pwr. Density Calc. (mW/cm^2)** | **Pwr. Density Max Calc. (mW/cm^2)** |
| Trunk (cnt) | HAF4016A | 2.15 | 90 | E | 0.89 | 0.074 | 5.00 | 0.074 | 0.07 |
| **Measurement Grid** | | | | | | | | | |
| **Test Position** | **Height (cm)** | **% of Control Limit** | | **Test Position** | **Height (cm)** | **% of Control Limit** | | IEEE Controlled Limit | IEEE Uncontrolled Limit |
| 1 | 20 | 2.3% | | 6 | 120 | 3.3% | | 2.67 | 0.53 |
| 2 | 40 | 2.3% | | 7 | 140 | 3.1% | | | |
| 3 | 60 | 2.7% | | 8 | 160 | 2.8% | | | |
| 4 | 80 | 3.0% | | 9 | 180 | 2.6% | | | **RF Po (*Max)** |
| 5 | 100 | 3.2% | | 10 | 200 | 2.3% | | | 5.00 |

BS Position 2

**Table 18**

| External Vehicle MPE Assessment @ 806 MHz | | | | | | | | | |
|---|---|---|---|---|---|---|---|---|---|
| **Antenna Location** | **Antenna Model** | **Gain (dBi)** | **Meas. Distance (cm)** | **E/H Field** | **Calibration Factor** | **Average over Body (mW/cm^2)** | **Initial Power (W)** | **Pwr. Density Calc. (mW/cm^2)** | **Pwr. Density Max Calc. (mW/cm^2)** |
| Trunk (cnt) | HAF4016A | 2.15 | 90 | E | 0.89 | 0.075 | 4.98 | 0.075 | 0.07 |
| **Measurement Grid** | | | | | | | | | |
| **Test Position** | **Height (cm)** | **% of Control Limit** | | **Test Position** | **Height (cm)** | **% of Control Limit** | | IEEE Controlled Limit | IEEE Uncontrolled Limit |
| 1 | 20 | 1.9% | | 6 | 120 | 3.1% | | 2.69 | 0.54 |
| 2 | 40 | 2.5% | | 7 | 140 | 3.3% | | | |
| 3 | 60 | 2.9% | | 8 | 160 | 2.9% | | | |
| 4 | 80 | 3.1% | | 9 | 180 | 2.0% | | | **RF Po (*Max)** |
| 5 | 100 | 3.5% | | 10 | 200 | 2.6% | | | 5.00 |

## DQPMDVR7000P - DVR 700 Tables of raw measurement grid test results

BS Position 3

**Table 19**

| External Vehicle MPE Assessment @ 764 MHz | | | | | | | | | |
|---|---|---|---|---|---|---|---|---|---|
| **Antenna Location** | **Antenna Model** | **Gain (dBi)** | **Meas. Distance (cm)** | **E/H Field** | **Calibration Factor** | **Average over Body (mW/cm^2)** | **Initial Power (W)** | **Pwr. Density Calc. (mW/cm^2)** | **Pwr. Density Max Calc. (mW/cm^2)** |
| Trunk (cnt) | HAF4016A | 2.15 | 90 | E | 0.9 | 0.063 | 4.99 | 0.063 | 0.06 |
| **Measurement Grid** | | | | | | | | | |
| **Test Position** | **Height (cm)** | **% of Control Limit** | | **Test Position** | **Height (cm)** | **% of Control Limit** | | IEEE Controlled Limit | IEEE Uncontrolled Limit |
| 1 | 20 | 2.0% | | 6 | 120 | 3.1% | | 2.55 | 0.51 |
| 2 | 40 | 2.3% | | 7 | 140 | 2.8% | | | |
| 3 | 60 | 2.3% | | 8 | 160 | 2.7% | | | |
| 4 | 80 | 2.9% | | 9 | 180 | 1.8% | | | **RF Po (*Max)** |
| 5 | 100 | 2.9% | | 10 | 200 | 2.0% | | | 5.00 |

BS Position 3

**Table 20**

| External Vehicle MPE Assessment @ 770 MHz | | | | | | | | | |
|---|---|---|---|---|---|---|---|---|---|
| **Antenna Location** | **Antenna Model** | **Gain (dBi)** | **Meas. Distance (cm)** | **E/H Field** | **Calibration Factor** | **Average over Body (mW/cm^2)** | **Initial Power (W)** | **Pwr. Density Calc. (mW/cm^2)** | **Pwr. Density Max Calc. (mW/cm^2)** |
| Trunk (cnt) | HAF4016A | 2.15 | 90 | E | 0.9 | 0.061 | 5.02 | 0.061 | 0.06 |
| **Measurement Grid** | | | | | | | | | |
| **Test Position** | **Height (cm)** | **% of Control Limit** | | **Test Position** | **Height (cm)** | **% of Control Limit** | | IEEE Controlled Limit | IEEE Uncontrolled Limit |
| 1 | 20 | 2.4% | | 6 | 120 | 3.2% | | 2.57 | 0.51 |
| 2 | 40 | 2.2% | | 7 | 140 | 3.0% | | | |
| 3 | 60 | 2.2% | | 8 | 160 | 2.5% | | | |
| 4 | 80 | 2.1% | | 9 | 180 | 1.8% | | | **RF Po (*Max)** |
| 5 | 100 | 2.8% | | 10 | 200 | 1.7% | | | 5.00 |

BS Position 3

**Table 21**

| External Vehicle MPE Assessment @ 776 MHz | | | | | | | | | |
|---|---|---|---|---|---|---|---|---|---|
| **Antenna Location** | **Antenna Model** | **Gain (dBi)** | **Meas. Distance (cm)** | **E/H Field** | **Calibration Factor** | **Average over Body (mW/cm^2)** | **Initial Power (W)** | **Pwr. Density Calc. (mW/cm^2)** | **Pwr. Density Max Calc. (mW/cm^2)** |
| Trunk (cnt) | HAF4016A | 2.15 | 90 | E | 0.9 | 0.063 | 4.97 | 0.063 | 0.06 |
| **Measurement Grid** | | | | | | | | | |
| **Test Position** | **Height (cm)** | **% of Control Limit** | | **Test Position** | **Height (cm)** | **% of Control Limit** | | IEEE Controlled Limit | IEEE Uncontrolled Limit |
| 1 | 20 | 2.3% | | 6 | 120 | 3.0% | | 2.59 | 0.52 |
| 2 | 40 | 2.0% | | 7 | 140 | 3.2% | | | |
| 3 | 60 | 2.1% | | 8 | 160 | 2.3% | | | |
| 4 | 80 | 3.0% | | 9 | 180 | 1.9% | | | **RF Po (*Max)** |
| 5 | 100 | 2.8% | | 10 | 200 | 1.8% | | | 5.00 |

## DQPMDVR7000P - DVR 700 Tables of raw measurement grid test results

BS Position 3

**Table 22**

| External Vehicle MPE Assessment @ 794 MHz | | | | | | | | | |
|---|---|---|---|---|---|---|---|---|---|
| **Antenna Location** | **Antenna Model** | **Gain (dBi)** | **Meas. Distance (cm)** | **E/H Field** | **Calibration Factor** | **Average over Body (mW/cm^2)** | **Initial Power (W)** | **Pwr. Density Calc. (mW/cm^2)** | **Pwr. Density Max Calc. (mW/cm^2)** |
| Trunk (cnt) | HAF4016A | 2.15 | 90 | E | 0.89 | 0.061 | 4.98 | 0.061 | 0.06 |
| **Measurement Grid** | | | | | | | | | |
| **Test Position** | **Height (cm)** | **% of Control Limit** | | **Test Position** | **Height (cm)** | **% of Control Limit** | | IEEE Controlled Limit | IEEE Uncontrolled Limit |
| 1 | 20 | 1.9% | | 6 | 120 | 2.9% | | 2.65 | 0.53 |
| 2 | 40 | 2.1% | | 7 | 140 | 2.7% | | | |
| 3 | 60 | 2.4% | | 8 | 160 | 2.0% | | | |
| 4 | 80 | 3.0% | | 9 | 180 | 1.7% | | | **RF Po (*Max)** |
| 5 | 100 | 2.3% | | 10 | 200 | 1.9% | | | 5.00 |

BS Position 3

**Table 23**

| External Vehicle MPE Assessment @ 800 MHz | | | | | | | | | |
|---|---|---|---|---|---|---|---|---|---|
| **Antenna Location** | **Antenna Model** | **Gain (dBi)** | **Meas. Distance (cm)** | **E/H Field** | **Calibration Factor** | **Average over Body (mW/cm^2)** | **Initial Power (W)** | **Pwr. Density Calc. (mW/cm^2)** | **Pwr. Density Max Calc. (mW/cm^2)** |
| Trunk (cnt) | HAF4016A | 2.15 | 90 | E | 0.89 | 0.061 | 5.00 | 0.061 | 0.06 |
| **Measurement Grid** | | | | | | | | | |
| **Test Position** | **Height (cm)** | **% of Control Limit** | | **Test Position** | **Height (cm)** | **% of Control Limit** | | IEEE Controlled Limit | IEEE Uncontrolled Limit |
| 1 | 20 | 2.0% | | 6 | 120 | 2.5% | | 2.67 | 0.53 |
| 2 | 40 | 2.2% | | 7 | 140 | 3.2% | | | |
| 3 | 60 | 2.0% | | 8 | 160 | 2.4% | | | |
| 4 | 80 | 2.5% | | 9 | 180 | 1.8% | | | **RF Po (*Max)** |
| 5 | 100 | 2.4% | | 10 | 200 | 1.8% | | | 5.00 |

BS Position 3

**Table 24**

| External Vehicle MPE Assessment @ 806 MHz | | | | | | | | | |
|---|---|---|---|---|---|---|---|---|---|
| **Antenna Location** | **Antenna Model** | **Gain (dBi)** | **Meas. Distance (cm)** | **E/H Field** | **Calibration Factor** | **Average over Body (mW/cm^2)** | **Initial Power (W)** | **Pwr. Density Calc. (mW/cm^2)** | **Pwr. Density Max Calc. (mW/cm^2)** |
| Trunk (cnt) | HAF4016A | 2.15 | 90 | E | 0.89 | 0.057 | 4.98 | 0.057 | 0.06 |
| **Measurement Grid** | | | | | | | | | |
| **Test Position** | **Height (cm)** | **% of Control Limit** | | **Test Position** | **Height (cm)** | **% of Control Limit** | | IEEE Controlled Limit | IEEE Uncontrolled Limit |
| 1 | 20 | 2.0% | | 6 | 120 | 2.0% | | 2.69 | 0.54 |
| 2 | 40 | 1.9% | | 7 | 140 | 2.5% | | | |
| 3 | 60 | 2.0% | | 8 | 160 | 1.9% | | | |
| 4 | 80 | 2.5% | | 9 | 180 | 1.8% | | | **RF Po (*Max)** |
| 5 | 100 | 2.6% | | 10 | 200 | 2.1% | | | 5.00 |

## DQPMDVR7000P - DVR 700 Tables of raw measurement grid test results

BS Position 4

**Table 25**

| External Vehicle MPE Assessment @ 764 MHz | | | | | | | | | |
|---|---|---|---|---|---|---|---|---|---|
| **Antenna Location** | **Antenna Model** | **Gain (dBi)** | **Meas. Distance (cm)** | **E/H Field** | **Calibration Factor** | **Average over Body (mW/cm^2)** | **Initial Power (W)** | **Pwr. Density Calc. (mW/cm^2)** | **Pwr. Density Max Calc. (mW/cm^2)** |
| Trunk (cnt) | HAF4016A | 2.15 | 90 | E | 0.9 | 0.074 | 4.99 | 0.074 | 0.07 |
| **Measurement Grid** | | | | | | | | | |
| **Test Position** | **Height (cm)** | **% of Control Limit** | | **Test Position** | **Height (cm)** | **% of Control Limit** | | IEEE Controlled Limit | IEEE Uncontrolled Limit |
| 1 | 20 | 2.1% | | 6 | 120 | 4.7% | | 2.55 | 0.51 |
| 2 | 40 | 3.2% | | 7 | 140 | 3.2% | | | |
| 3 | 60 | 2.5% | | 8 | 160 | 2.2% | | | |
| 4 | 80 | 3.5% | | 9 | 180 | 2.5% | | | **RF Po (*Max)** |
| 5 | 100 | 3.3% | | 10 | 200 | 2.0% | | | 5.00 |

BS Position 4

**Table 26**

| External Vehicle MPE Assessment @ 770 MHz | | | | | | | | | |
|---|---|---|---|---|---|---|---|---|---|
| **Antenna Location** | **Antenna Model** | **Gain (dBi)** | **Meas. Distance (cm)** | **E/H Field** | **Calibration Factor** | **Average over Body (mW/cm^2)** | **Initial Power (W)** | **Pwr. Density Calc. (mW/cm^2)** | **Pwr. Density Max Calc. (mW/cm^2)** |
| Trunk (cnt) | HAF4016A | 2.15 | 90 | E | 0.9 | 0.090 | 5.02 | 0.090 | 0.09 |
| **Measurement Grid** | | | | | | | | | |
| **Test Position** | **Height (cm)** | **% of Control Limit** | | **Test Position** | **Height (cm)** | **% of Control Limit** | | IEEE Controlled Limit | IEEE Uncontrolled Limit |
| 1 | 20 | 2.5% | | 6 | 120 | 4.4% | | 2.57 | 0.51 |
| 2 | 40 | 2.9% | | 7 | 140 | 5.7% | | | |
| 3 | 60 | 3.0% | | 8 | 160 | 3.6% | | | |
| 4 | 80 | 4.4% | | 9 | 180 | 2.2% | | | **RF Po (*Max)** |
| 5 | 100 | 4.3% | | 10 | 200 | 2.1% | | | 5.00 |

BS Position 4

**Table 27**

| External Vehicle MPE Assessment @ 776 MHz | | | | | | | | | |
|---|---|---|---|---|---|---|---|---|---|
| **Antenna Location** | **Antenna Model** | **Gain (dBi)** | **Meas. Distance (cm)** | **E/H Field** | **Calibration Factor** | **Average over Body (mW/cm^2)** | **Initial Power (W)** | **Pwr. Density Calc. (mW/cm^2)** | **Pwr. Density Max Calc. (mW/cm^2)** |
| Trunk (cnt) | HAF4016A | 2.15 | 90 | E | 0.9 | 0.095 | 4.97 | 0.095 | 0.10 |
| **Measurement Grid** | | | | | | | | | |
| **Test Position** | **Height (cm)** | **% of Control Limit** | | **Test Position** | **Height (cm)** | **% of Control Limit** | | IEEE Controlled Limit | IEEE Uncontrolled Limit |
| 1 | 20 | 2.6% | | 6 | 120 | 4.8% | | 2.59 | 0.52 |
| 2 | 40 | 3.2% | | 7 | 140 | 5.6% | | | |
| 3 | 60 | 3.8% | | 8 | 160 | 3.3% | | | |
| 4 | 80 | 4.8% | | 9 | 180 | 2.5% | | | **RF Po (*Max)** |
| 5 | 100 | 4.2% | | 10 | 200 | 2.0% | | | 5.00 |

## DQPMDVR7000P - DVR 700 Tables of raw measurement grid test results

BS Position 4

**Table 28**

| External Vehicle MPE Assessment @ 794 MHz | | | | | | | | | |
|---|---|---|---|---|---|---|---|---|---|
| **Antenna Location** | **Antenna Model** | **Gain (dBi)** | **Meas. Distance (cm)** | **E/H Field** | **Calibration Factor** | **Average over Body (mW/cm^2)** | **Initial Power (W)** | **Pwr. Density Calc. (mW/cm^2)** | **Pwr. Density Max Calc. (mW/cm^2)** |
| Trunk (cnt) | HAF4016A | 2.15 | 90 | E | 0.89 | 0.086 | 4.98 | 0.086 | 0.09 |
| **Measurement Grid** | | | | | | | | | |
| **Test Position** | **Height (cm)** | **% of Control Limit** | | **Test Position** | **Height (cm)** | **% of Control Limit** | | IEEE Controlled Limit | IEEE Uncontrolled Limit |
| 1 | 20 | 2.7% | | 6 | 120 | 4.1% | | 2.65 | 0.53 |
| 2 | 40 | 2.9% | | 7 | 140 | 4.2% | | | |
| 3 | 60 | 2.6% | | 8 | 160 | 3.0% | | | |
| 4 | 80 | 4.1% | | 9 | 180 | 2.3% | | | **RF Po (*Max)** |
| 5 | 100 | 4.3% | | 10 | 200 | 2.2% | | | 5.00 |

BS Position 4

**Table 29**

| External Vehicle MPE Assessment @ 800 MHz | | | | | | | | | |
|---|---|---|---|---|---|---|---|---|---|
| **Antenna Location** | **Antenna Model** | **Gain (dBi)** | **Meas. Distance (cm)** | **E/H Field** | **Calibration Factor** | **Average over Body (mW/cm^2)** | **Initial Power (W)** | **Pwr. Density Calc. (mW/cm^2)** | **Pwr. Density Max Calc. (mW/cm^2)** |
| Trunk (cnt) | HAF4016A | 2.15 | 90 | E | 0.89 | 0.086 | 5.00 | 0.086 | 0.09 |
| **Measurement Grid** | | | | | | | | | |
| **Test Position** | **Height (cm)** | **% of Control Limit** | | **Test Position** | **Height (cm)** | **% of Control Limit** | | IEEE Controlled Limit | IEEE Uncontrolled Limit |
| 1 | 20 | 2.7% | | 6 | 120 | 3.7% | | 2.67 | 0.53 |
| 2 | 40 | 3.5% | | 7 | 140 | 4.0% | | | |
| 3 | 60 | 3.3% | | 8 | 160 | 3.1% | | | |
| 4 | 80 | 3.9% | | 9 | 180 | 2.3% | | | **RF Po (*Max)** |
| 5 | 100 | 3.8% | | 10 | 200 | 2.1% | | | 5.00 |

BS Position 4

**Table 30**

| External Vehicle MPE Assessment @ 806 MHz | | | | | | | | | |
|---|---|---|---|---|---|---|---|---|---|
| **Antenna Location** | **Antenna Model** | **Gain (dBi)** | **Meas. Distance (cm)** | **E/H Field** | **Calibration Factor** | **Average over Body (mW/cm^2)** | **Initial Power (W)** | **Pwr. Density Calc. (mW/cm^2)** | **Pwr. Density Max Calc. (mW/cm^2)** |
| Trunk (cnt) | HAF4016A | 2.15 | 90 | E | 0.89 | 0.092 | 4.98 | 0.092 | 0.09 |
| **Measurement Grid** | | | | | | | | | |
| **Test Position** | **Height (cm)** | **% of Control Limit** | | **Test Position** | **Height (cm)** | **% of Control Limit** | | IEEE Controlled Limit | IEEE Uncontrolled Limit |
| 1 | 20 | 2.6% | | 6 | 120 | 3.8% | | 2.69 | 0.54 |
| 2 | 40 | 2.9% | | 7 | 140 | 5.3% | | | |
| 3 | 60 | 3.5% | | 8 | 160 | 3.7% | | | |
| 4 | 80 | 4.2% | | 9 | 180 | 2.5% | | | **RF Po (*Max)** |
| 5 | 100 | 3.8% | | 10 | 200 | 2.1% | | | 5.00 |

## DQPMDVR7000P - DVR 700 Tables of raw measurement grid test results

BS Position 5

**Table 31**

| External Vehicle MPE Assessment @ 764 MHz | | | | | | | | | |
|---|---|---|---|---|---|---|---|---|---|
| **Antenna Location** | **Antenna Model** | **Gain (dBi)** | **Meas. Distance (cm)** | **E/H Field** | **Calibration Factor** | **Average over Body (mW/cm^2)** | **Initial Power (W)** | **Pwr. Density Calc. (mW/cm^2)** | **Pwr. Density Max Calc. (mW/cm^2)** |
| Trunk (cnt) | HAF4016A | 2.15 | 90 | E | 0.9 | 0.095 | 4.99 | 0.095 | 0.09 |
| **Measurement Grid** | | | | | | | | | |
| **Test Position** | **Height (cm)** | **% of Control Limit** | | **Test Position** | **Height (cm)** | **% of Control Limit** | | IEEE Controlled Limit | IEEE Uncontrolled Limit |
| 1 | 20 | 2.3% | | 6 | 120 | 4.6% | | 2.55 | 0.51 |
| 2 | 40 | 3.7% | | 7 | 140 | 4.6% | | | |
| 3 | 60 | 4.6% | | 8 | 160 | 3.4% | | | |
| 4 | 80 | 4.3% | | 9 | 180 | 2.6% | | | **RF Po (*Max)** |
| 5 | 100 | 5.2% | | 10 | 200 | 1.9% | | | 5.00 |

BS Position 5

**Table 32**

| External Vehicle MPE Assessment @ 770 MHz | | | | | | | | | |
|---|---|---|---|---|---|---|---|---|---|
| **Antenna Location** | **Antenna Model** | **Gain (dBi)** | **Meas. Distance (cm)** | **E/H Field** | **Calibration Factor** | **Average over Body (mW/cm^2)** | **Initial Power (W)** | **Pwr. Density Calc. (mW/cm^2)** | **Pwr. Density Max Calc. (mW/cm^2)** |
| Trunk (cnt) | HAF4016A | 2.15 | 90 | E | 0.9 | 0.090 | 5.02 | 0.090 | 0.09 |
| **Measurement Grid** | | | | | | | | | |
| **Test Position** | **Height (cm)** | **% of Control Limit** | | **Test Position** | **Height (cm)** | **% of Control Limit** | | IEEE Controlled Limit | IEEE Uncontrolled Limit |
| 1 | 20 | 2.1% | | 6 | 120 | 4.1% | | 2.57 | 0.51 |
| 2 | 40 | 2.9% | | 7 | 140 | 4.4% | | | |
| 3 | 60 | 3.6% | | 8 | 160 | 3.1% | | | |
| 4 | 80 | 5.7% | | 9 | 180 | 2.2% | | | **RF Po (*Max)** |
| 5 | 100 | 5.1% | | 10 | 200 | 2.0% | | | 5.00 |

BS Position 5

**Table 33**

| External Vehicle MPE Assessment @ 776 MHz | | | | | | | | | |
|---|---|---|---|---|---|---|---|---|---|
| **Antenna Location** | **Antenna Model** | **Gain (dBi)** | **Meas. Distance (cm)** | **E/H Field** | **Calibration Factor** | **Average over Body (mW/cm^2)** | **Initial Power (W)** | **Pwr. Density Calc. (mW/cm^2)** | **Pwr. Density Max Calc. (mW/cm^2)** |
| Trunk (cnt) | HAF4016A | 2.15 | 90 | E | 0.9 | 0.085 | 4.97 | 0.085 | 0.09 |
| **Measurement Grid** | | | | | | | | | |
| **Test Position** | **Height (cm)** | **% of Control Limit** | | **Test Position** | **Height (cm)** | **% of Control Limit** | | IEEE Controlled Limit | IEEE Uncontrolled Limit |
| 1 | 20 | 2.1% | | 6 | 120 | 3.7% | | 2.59 | 0.52 |
| 2 | 40 | 2.9% | | 7 | 140 | 4.5% | | | |
| 3 | 60 | 2.7% | | 8 | 160 | 3.0% | | | |
| 4 | 80 | 3.4% | | 9 | 180 | 3.9% | | | **RF Po (*Max)** |
| 5 | 100 | 4.4% | | 10 | 200 | 2.2% | | | 5.00 |

## DQPMDVR7000P - DVR 700 Tables of raw measurement grid test results

BS Position 5

**Table 34**

| External Vehicle MPE Assessment @ 794 MHz | | | | | | | | | |
|---|---|---|---|---|---|---|---|---|---|
| **Antenna Location** | **Antenna Model** | **Gain (dBi)** | **Meas. Distance (cm)** | **E/H Field** | **Calibration Factor** | **Average over Body (mW/cm^2)** | **Initial Power (W)** | **Pwr. Density Calc. (mW/cm^2)** | **Pwr. Density Max Calc. (mW/cm^2)** |
| Trunk (cnt) | HAF4016A | 2.15 | 90 | E | 0.89 | 0.081 | 4.98 | 0.081 | 0.08 |
| **Measurement Grid** | | | | | | | | | |
| **Test Position** | **Height (cm)** | **% of Control Limit** | | **Test Position** | **Height (cm)** | **% of Control Limit** | | IEEE Controlled Limit | IEEE Uncontrolled Limit |
| 1 | 20 | 1.9% | | 6 | 120 | 4.1% | | 2.65 | 0.53 |
| 2 | 40 | 2.6% | | 7 | 140 | 4.4% | | | |
| 3 | 60 | 2.9% | | 8 | 160 | 2.9% | | | |
| 4 | 80 | 2.7% | | 9 | 180 | 3.0% | | | **RF Po (*Max)** |
| 5 | 100 | 4.2% | | 10 | 200 | 2.0% | | | 5.00 |

BS Position 5

**Table 35**

| External Vehicle MPE Assessment @ 800 MHz | | | | | | | | | |
|---|---|---|---|---|---|---|---|---|---|
| **Antenna Location** | **Antenna Model** | **Gain (dBi)** | **Meas. Distance (cm)** | **E/H Field** | **Calibration Factor** | **Average over Body (mW/cm^2)** | **Initial Power (W)** | **Pwr. Density Calc. (mW/cm^2)** | **Pwr. Density Max Calc. (mW/cm^2)** |
| Trunk (cnt) | HAF4016A | 2.15 | 90 | E | 0.89 | 0.082 | 5.00 | 0.082 | 0.08 |
| **Measurement Grid** | | | | | | | | | |
| **Test Position** | **Height (cm)** | **% of Control Limit** | | **Test Position** | **Height (cm)** | **% of Control Limit** | | IEEE Controlled Limit | IEEE Uncontrolled Limit |
| 1 | 20 | 1.8% | | 6 | 120 | 3.8% | | 2.67 | 0.53 |
| 2 | 40 | 3.0% | | 7 | 140 | 4.1% | | | |
| 3 | 60 | 2.5% | | 8 | 160 | 2.8% | | | |
| 4 | 80 | 3.8% | | 9 | 180 | 2.5% | | | **RF Po (*Max)** |
| 5 | 100 | 4.2% | | 10 | 200 | 2.1% | | | 5.00 |

BS Position 5

**Table 36**

| External Vehicle MPE Assessment @ 806 MHz | | | | | | | | | |
|---|---|---|---|---|---|---|---|---|---|
| **Antenna Location** | **Antenna Model** | **Gain (dBi)** | **Meas. Distance (cm)** | **E/H Field** | **Calibration Factor** | **Average over Body (mW/cm^2)** | **Initial Power (W)** | **Pwr. Density Calc. (mW/cm^2)** | **Pwr. Density Max Calc. (mW/cm^2)** |
| Trunk (cnt) | HAF4016A | 2.15 | 90 | E | 0.89 | 0.069 | 4.98 | 0.069 | 0.07 |
| **Measurement Grid** | | | | | | | | | |
| **Test Position** | **Height (cm)** | **% of Control Limit** | | **Test Position** | **Height (cm)** | **% of Control Limit** | | IEEE Controlled Limit | IEEE Uncontrolled Limit |
| 1 | 20 | 1.9% | | 6 | 120 | 2.9% | | 2.69 | 0.54 |
| 2 | 40 | 2.5% | | 7 | 140 | 3.3% | | | |
| 3 | 60 | 2.1% | | 8 | 160 | 2.0% | | | |
| 4 | 80 | 3.0% | | 9 | 180 | 1.8% | | | **RF Po (*Max)** |
| 5 | 100 | 4.0% | | 10 | 200 | 2.0% | | | 5.00 |