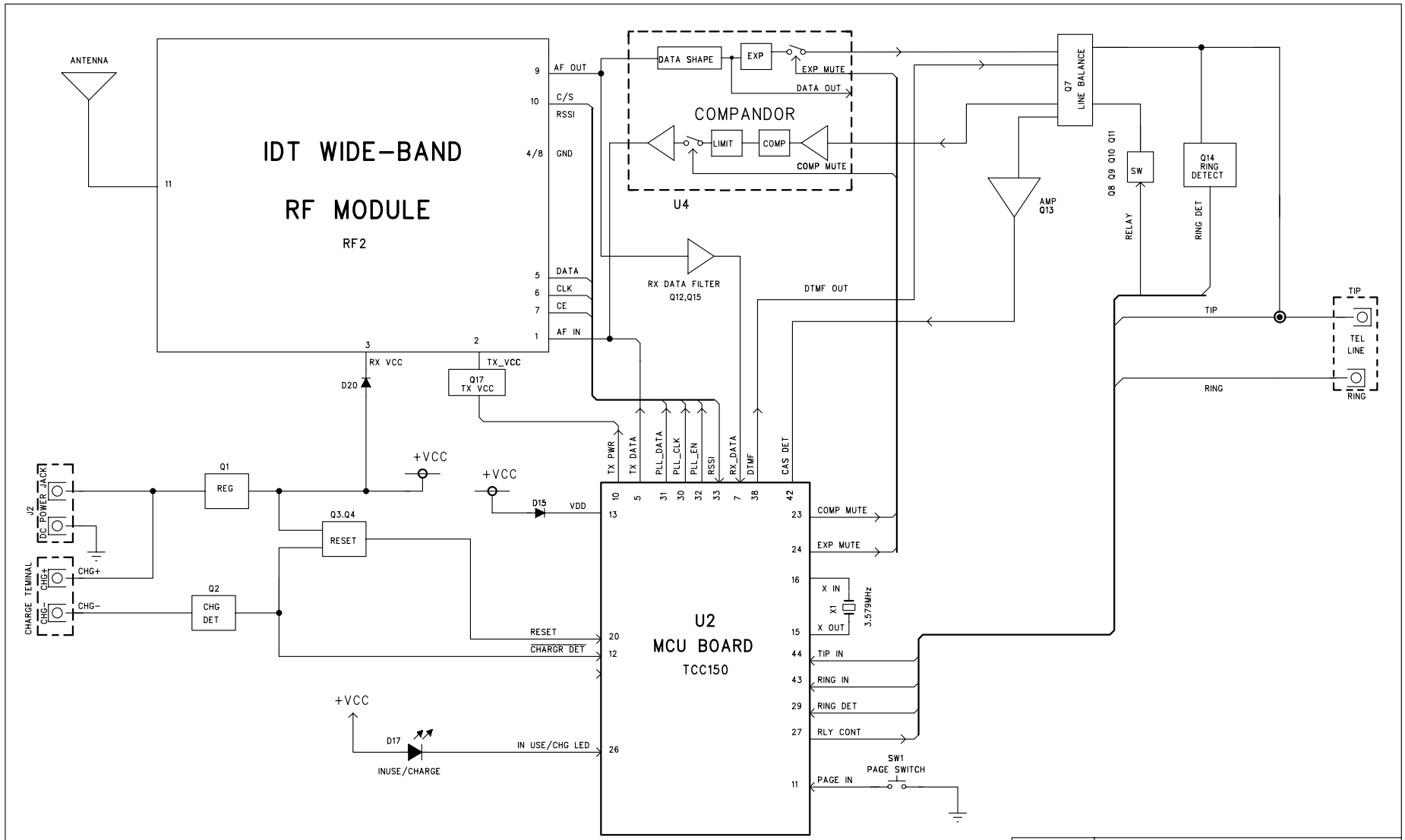


| | | | |
|---|---|---|---|
| TITLE | PC939G/W BASE BLOCK DIAGRAM | | |
| DOC NO | | DIVISION | TELECOM |
| MODEL NO | PC939G/W | DRAFT | XU LIAN |
| PART NO | | CHKD | |
| PAGE | 1 OF 1 | APPD | S.D PARK |
| INTERGRATED DISPLAY TECHNOLOGY Ltd. | | | |

PC939_BU_BLK.sch-1 - Wed Jan 26 11:46:24 2005

| REV | DESCRIPTION | CHECKED BY | APPROVED BY | DATE |
|---|---|---|---|---|
| 1 | FIRST RELEASE | NKAM | | MAR,07, 2005 |
| 2 | | | | |
| 3 | | | | |
| 4 | | | | |

# BASE UNIT RF900M RF MODULE BLOCK DIAGRAM

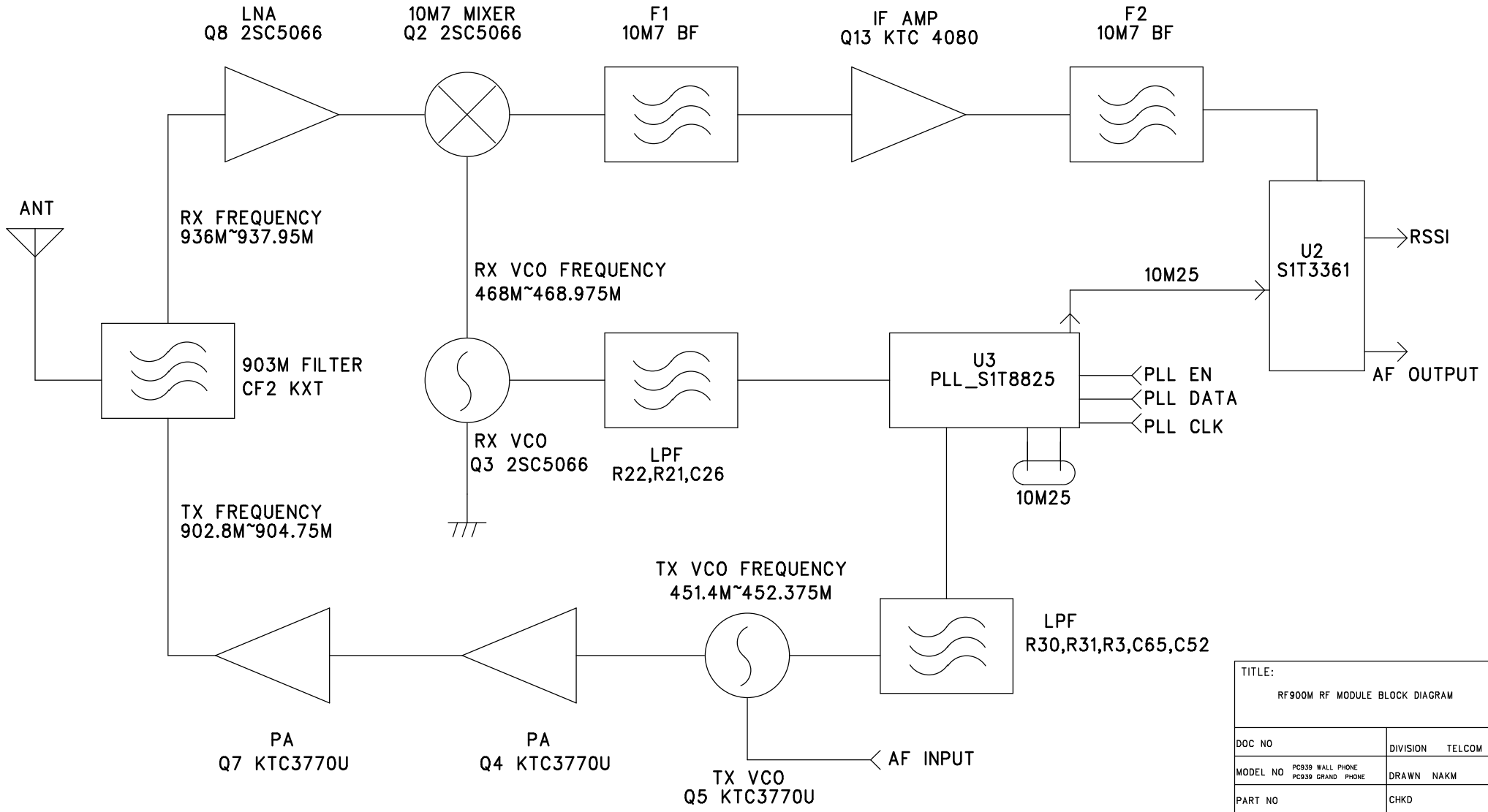


| | |
|---|---|
| TITLE: RF900M RF MODULE BLOCK DIAGRAM | |
| DOC NO | DIVISION TELCOM |
| MODEL NO PC939 WALL PHONE PC939 GRAND PHONE | DRAWN NAKM |
| PART NO | CHKD |
| PAGE 1 OF 1 | APPD |
| IDT INTEGRATED DISPLAY TECHNOLOGY LTD. | |

PDDF-T0121A

block diagram_BU.sch-1 - Tue Mar 08 10:18:59 2005

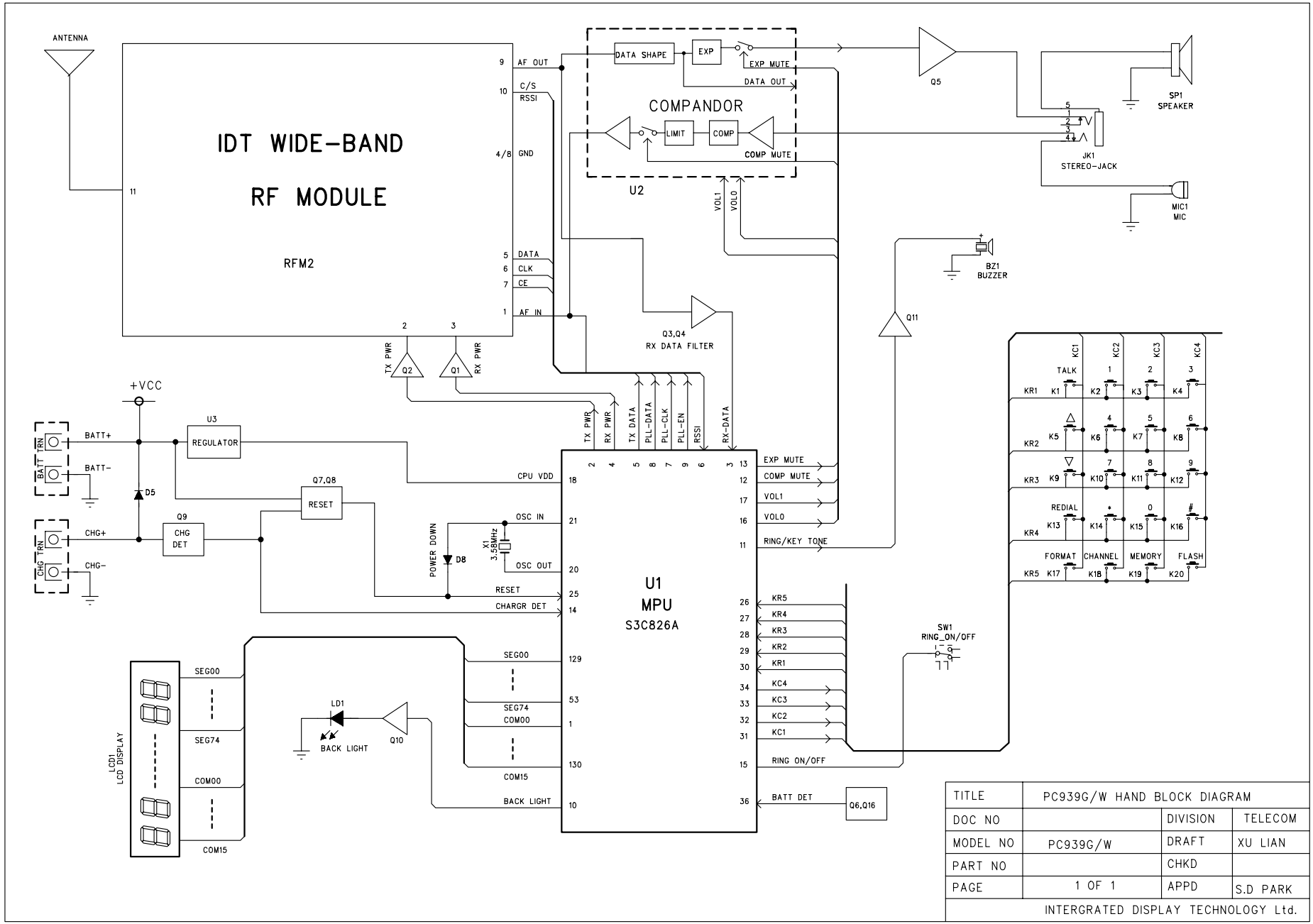


| | | | |
|---|---|---|---|
| TITLE | PC939G/W HAND BLOCK DIAGRAM | | |
| DOC NO | | DIVISION | TELECOM |
| MODEL NO | PC939G/W | DRAFT | XU LIAN |
| PART NO | | CHKD | |
| PAGE | 1 OF 1 | APPD | S.D PARK |
| INTERGRATED DISPLAY TECHNOLOGY Ltd. | | | |

PC939_HS_BLK.sch-1 - Wed Jan 26 11:47:07 2005

| REV | DESCRIPTION | CHECKED BY | APPROVED BY | DATE |
|---|---|---|---|---|
| 1 | FIRST RELEASE | NKAM | | MAR,07, 2005 |
| 2 | | | | |
| 3 | | | | |
| 4 | | | | |

# HAND SET RF900M RF MODULE BLOCK DIAGRAM

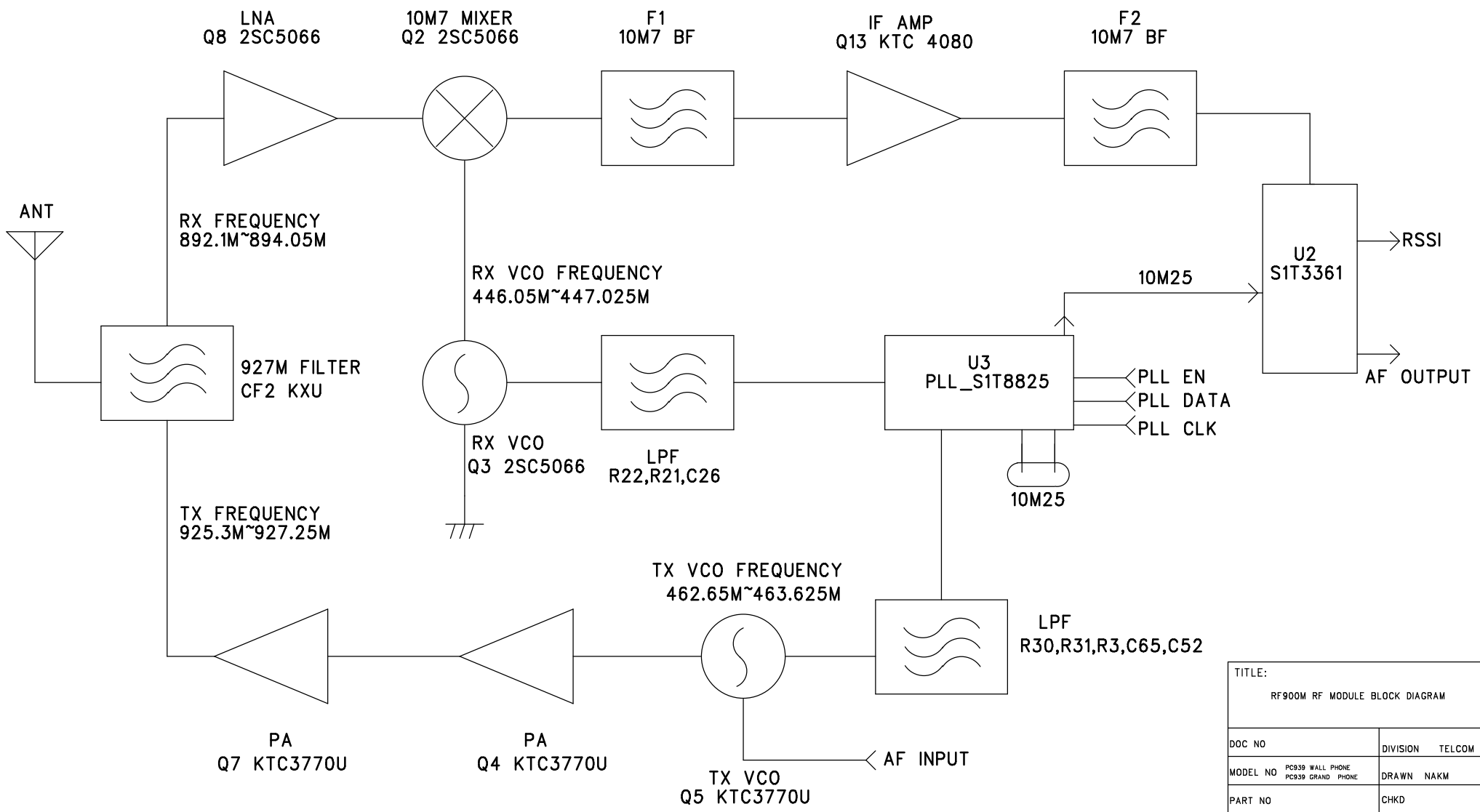


| | |
|---|---|
| TITLE: RF900M RF MODULE BLOCK DIAGRAM | |
| DOC NO | DIVISION TELCOM |
| MODEL NO PC939 WALL PHONE PC939 GRAND PHONE | DRAWN NAKM |
| PART NO | CHKD |
| PAGE 1 OF 1 | APPD |
| IDT INTEGRATED DISPLAY TECHNOLOGY LTD. | |

PDDF-T0121A

block diagram_HS.sch-1 - Tue Mar 08 10:18:45 2005