pulsar™

# Model RX5

RX5 software v1.0a

## Installation and Operating Manual

*Through-Air*

*Radar Level Transmitter*

Magnetrol®

STI

**Read this Manual Before Installing**
This manual provides information on the Pulsar Radar transmitter. It is important that all instructions are read carefully and followed in sequence. The *QuickStart Installation* instructions are a brief guide to the sequence of steps for experienced technicians to follow when installing the equipment. Detailed instructions are included in the *Complete Installation* section of this manual.

**Conventions Used in this Manual**
Certain conventions are used in this manual to convey specific types of information. General technical material, support data, and safety information are presented in narrative form. The following styles are used for notes, cautions, and warnings.

**Notes**
Notes contain information that augments or clarifies an operating step. Notes do not normally contain actions. They follow the procedural steps to which they refer.

**Cautions**
Cautions alert the technician to special conditions that could injure personnel, damage equipment, or reduce a component's mechanical integrity. Cautions are also used to alert the technician to unsafe practices or the need for special protective equipment or specific materials. In this manual, a caution box indicates a potentially hazardous situation which, if not avoided, may result in minor or moderate injury.

**Warnings**
Warnings identify potentially dangerous situations or serious hazards. In this manual, a warning indicates an imminently hazardous situation which, if not avoided, could result in serious injury or death.

**Safety Messages**
The Through-Air Radar system is designed for use in Category II, Pollution Degree 2 installations. Follow all standard industry procedures for servicing electrical and computer equipment when working with or around high voltage. Always shut off the power supply before touching any components. Although high voltage is not present in this system, it may be present in other systems.

Electrical components are sensitive to electrostatic discharge. To prevent equipment damage, observe safety procedures when working with electrostatic sensitive components.

**Low Voltage Directive**
For use in Installations Category II, Pollution Degree 2. If equipment is used in a manner not specified by the manufacturer, protection provided by equipment may be impaired.

This device complies with Part 15 of the FCC rules. Operation is subject to the following two conditions: (1) This device may not cause harmful interference, and (2) This device must accept any interference received, including interference that may cause undesired operation.

FCC ID: LPN R95
Any unauthorized changes or modifications not expressly approved by the party responsible for compliance could void user's authority to operate this equipment.

**WARNING!** Explosion hazard. Do not connect or disconnect designs rated Explosion-proof or Non-incendive unless power has been switched off and/or the area is known to be non-hazardous

**Notice of Copyright and Limitations**
Copyright © 2003 Magnetrol International, Incorporated
All rights reserved.

Magnetrol reserves the right to make changes to the product described in this manual at any time without notice. Magnetrol makes no warranty with respect to the accuracy of the information in this manual.

**Warranty**
All Magnetrol/STI electronic level and flow controls are warranted free of defects in materials or workmanship for one full year from the date of original factory shipment.

If returned within the warranty period; and, upon factory inspection of the control, the cause of the claim is determined to be covered under the warranty; then, Magnetrol/STI will repair or replace the control at no cost to the purchaser (or owner) other than transportation.

Magnetrol/STI shall not be liable for misapplication, labor claims, direct or consequential damage or expense arising from the installation or use of equipment. There are no other warranties expressed or implied, except special written warranties covering some Magnetrol/STI products.

**Quality assurance**
The quality assurance system in place at Magnetrol/STI guarantees the highest level of quality throughout the company. Magnetrol is committed to providing full customer satisfaction both in quality products and quality service.

Magnetrol's quality assurance system is registered to ISO 9001 affirming its commitment to known international quality standards providing the strongest assurance of product/service quality available.

# Pulsar Through-Air Radar Transmitter

## Table of Contents


**1.0 QuickStart Installation**
- 1.1 Getting Started....1
  - 1.1.1 Equipment and Tools....1
  - 1.1.2 Configuration Information....2
- 1.2 QuickStart Mounting....3
  - 1.2.1 Antenna....3
  - 1.2.2 Transmitter....3
- 1.3 QuickStart Wiring....3
- 1.4 QuickStart Configuration....4

**2.0 Complete Installation**
- 2.1 Unpacking....6
- 2.2 Electronic Discharge (ESD) Handling Procedure....6
- 2.3 Before You Begin....7
  - 2.3.1 Site Preparation....7
  - 2.3.2 Equipment and Tools....7
  - 2.3.3 Operational Considerations....7
    - 2.3.3.1 Maximum Distance....8
    - 2.3.3.2 Minimum Distance....8
    - 2.3.3.3 Problematic Applications; GWR Alternative....8
- 2.4 Mounting....9
  - 2.4.1 Installing the Antenna....9
    - 2.4.1.1 Location....9
    - 2.4.1.2 Beam Angle....9
    - 2.4.1.3 Obstructions....10
    - 2.4.1.4 Nozzles....10
  - 2.4.2 Installing the Transmitter....11
    - 2.4.2.1 Orientation....11
    - 2.4.2.2 Initial Installation....12
    - 2.4.2.3 Signal Loss....12
- 2.5 Wiring....13
  - 2.5.1 General Purpose or Non-Incendive....13
  - 2.5.2 Intrinsically Safe....13
  - 2.5.3 Explosion Proof....14
- 2.6 Configuring the Transmitter....15
  - 2.6.1 Operating Parameters....15
  - 2.6.2 Setting Up for Shop Configuration....15
  - 2.6.3 Transmitter Display and Keypad....15
  - 2.6.4 Password Protection (Default = 0)....16
  - 2.6.5 Menu: Step-By-Step Procedure....17
    - 2.6.5.1 Radar Transmitter Menu Table....18
- 2.7 Configuration Using HART®....22
  - 2.7.1 Connections....22
  - 2.7.2 Display Menu....22
  - 2.7.3 HART Revision Table....22
    - 2.7.3.1 Model RX5....22
  - 2.7.4 HART Menu....23

**3.0 Reference Information**
- 3.1 Description....24
- 3.2 Theory of Operation....24
  - 3.2.1 Pulse Burst Radar....24
  - 3.2.2 Equivalent Time Sampling....25
- 3.3 Troubleshooting....26
  - 3.3.1 System Problems....26
  - 3.3.2 Error Messages....27
- 3.4 Agency Approvals....29
  - 3.4.1 Agency Drawing and Entity Parameters....30
- 3.5 Parts....31
  - 3.5.1 Replacement Parts....31
  - 3.5.2 Recommended Spare Parts....31
- 3.6 Specifications....32
  - 3.6.1 Functional – Transmitter....32
  - 3.6.2 Performance....33
  - 3.6.3 Functional – Dielectric Rod/Horn....34
  - 3.6.4 Antenna Pressure-Temperature Ratings....34
  - 3.6.5 Physical....34
- 3.7 Model Numbers....36
  - 3.7.1 Pulsar Radar Transmitter....36
  - 3.7.2 Radar Antennas – Dielectric Rod....37
  - 3.7.3 Radar Antennas – Horn....39

**Glossary**....40

**Model RX5 Configuration Data Sheet**....43

# 1.0 QuickStart Installation

The QuickStart Installation procedures provide the key steps for mounting, wiring, and configuring the Pulsar radar level transmitter. These procedures are intended for experienced installers of electronic level measurement instruments. See Complete Installation, Section 2.0, for detailed installation instructions.

## 1.1 Getting Started

Before beginning the QuickStart Installation procedures, have the right equipment, tools, and information available.

### 1.1.1 Equipment and Tools

No special tools are needed. The following items are recommended:

- Threaded antenna and transmitter — 2" (50 mm)
- Transmitter/antenna connection — 1¾" (44 mm)
- Transmitter adjustment — 1⅛" (28 mm), 3/32" (2.5 mm) Hex
- Torque wrench — highly desirable
- Flat-blade screwdriver
- Digital multimeter or volt/ammeter — Optional
- 24 VDC (23 mA) power supply — Optional

### 1.1.2 Configuration Information

Some key information is needed to configure the Pulsar radar transmitter. Complete the following operating parameters table before beginning configuration.

NOTE: The transmitter will already be configured if this information was provided with the order.

| Display | Question | Answer |
|---|---|---|
| Units | What units of measurement will be used? | _____ |
| Antenna Type | What type of antenna is being used? Select first 7 digits of Model number. (See nameplate on side of antenna) | _____ |
| Antenna Extension | What is maximum nozzle length that the antenna can be used? Select last 3 digits of Model number. (See nameplate on side of antenna) | _____ |
| Antenna Mount | Is the antenna mounting NPT, BSP, or flanged? | _____ |
| Sensor Offset | What is the distance from the top (100%) of the tank and the Sensor Reference point (bottom of NPT thread, top of BSP thread, or face of flange?) | _____ |
| Tank Top | Is the Tank Top Flat, Horizontal Cylinder, Dome, Irregular or other (non-metallic)? | _____ |
| Tank Height | What is the tank height? | _____ |
| Blocking | What is the distance from Sensor Reference point to Maximum Level? Maximum level should never be less than 2" (50 mm) from bottom of antenna. | _____ |
| Level Offset | Is there a region at the very bottom of the vessel that cannot be measured due to heating coils, angle tank bottom, etc.? | _____ |
| Dielectric | What is the dielectric of the process medium? | _____ |
| Turbulence | Is turbulence a consideration? | _____ |
| Rate of Change | What is the maximum rate the level will rise or fall? | _____ |
| Foam | Will there be foam on the surface? | _____ |
| Set 4.0 mA | What is the 0% reference point for the 4.0 mA value? | _____ |
| Set 20.0 mA | What is the 100% reference point for the 20.0 mA value? | _____ |

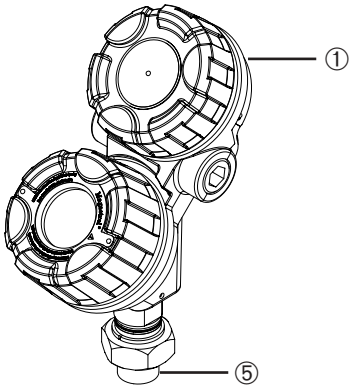


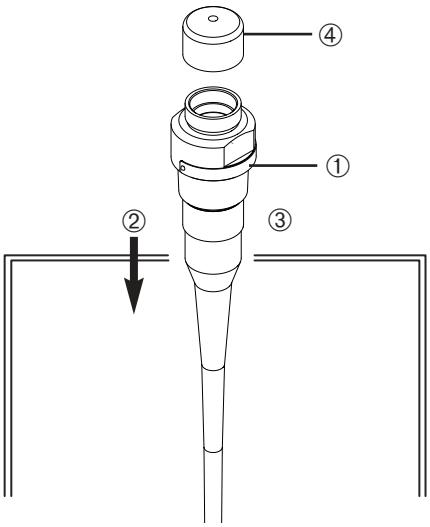


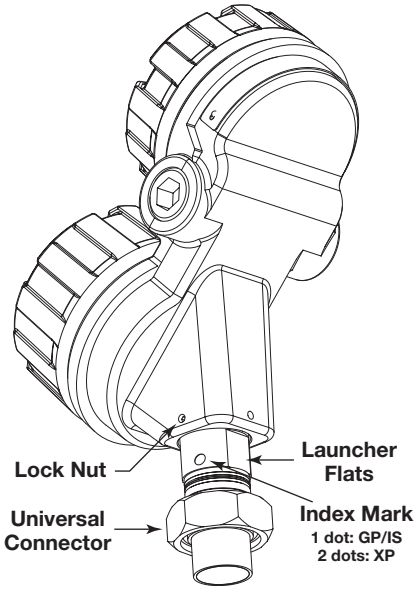


## 1.2 QuickStart Mounting

NOTE: Confirm the configuration style and process connection (size and type) of the Pulsar radar transmitter. Make sure it matches the requirements of the installation before continuing with the QuickStart installation.

① Confirm the model and serial numbers on the nameplates of Pulsar electronics and antenna are identical.

### 1.2.1 Antenna

② Carefully place the antenna into the vessel.

③ Secure the antenna to the vessel.

④ Leave the protective plastic cap in place until ready to install the transmitter.

NOTE: Do not use sealing compound or TFE tape on antenna connection to transmitter. This connection is sealed by a Viton O-ring.

### 1.2.2 Transmitter

1. Remove the protective plastic cap from the top of the antenna and store for future use. Make sure the bottom of the Universal connector (TFE) ⑤ and inside of the antenna are clean and dry. Clean with isopropyl alcohol and cotton swabs if necessary.
2. Place the transmitter on the antenna.
3. Ensure the housing/launcher lock nut is loose and the housing can be turned. Align the antenna "flats" so they are at an angle of 45° to a line from the radar unit to the nearest tank wall.
4. Rotate the transmitter so that it is in the most convenient position for wiring, configuring, and viewing.
5. While keeping the housing and launcher aligned, tighten both the housing/launcher lock nut and large Universal connector Hex nut. Tighten the universal connector to 30 ft./lbs of force. A torque wrench is highly desirable. DO NOT LEAVE HAND TIGHT.

- Do not place insulating material around any part of the Radar transmitter including the antenna flange.

## 1.3 QuickStart Wiring

***WARNING!*** Explosion hazard. Do not remove covers unless power has been switched off or the area is known to be non-hazardous.

NOTE: Make sure the electrical wiring to the Pulsar radar transmitter is complete and in compliance with all regulations and codes.

1. Remove the cover of the wiring compartment.

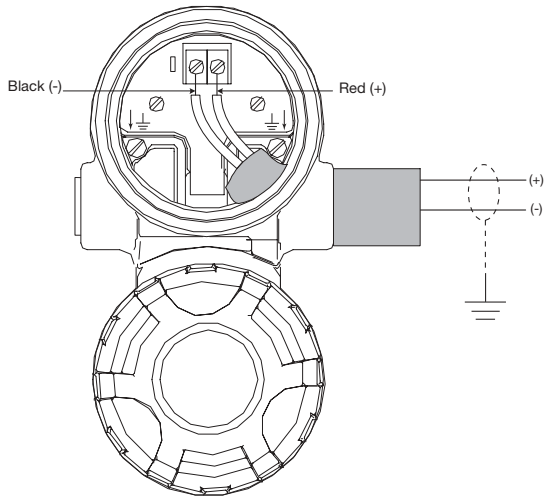


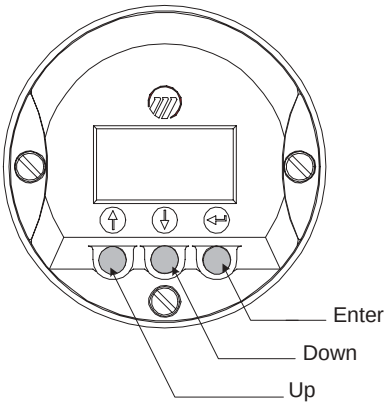


2. Attach a conduit fitting and mount the conduit plug in the spare opening. Pull the power supply wire through the conduit fitting.
3. Connect shield to an earth ground at power supply and leave floating at the transmitter.
4. Connect the positive supply wire to the (+) terminal and the negative supply wire to the (-) terminal. For Explosion Proof Installations, see Wiring, Section 2.5.3.
5. Replace the cover and tighten.

## 1.4 QuickStart Configuration

The Radar transmitter comes factory-calibrated and can be configured in minutes for specific applications. Bench configuration provides a convenient and efficient way to set up the transmitter before going to the tank site to complete the installation (disregard Fault messages due to unattached antenna). The minimum configuration instructions follow. Use the information from the operating parameters table before beginning configuration. See Configuration Information, Section 1.1.2.

1. Power-up the transmitter.

   Upon initial start-up, NO FALSE TARGET REJECTION error message will be displayed. Once in the vessel the FALSE TARGET routine must be run for proper operation. During normal operation the display changes every 5 seconds to show one of the four measured values: Level, Quality, %Output, and Loop.
2. Remove the cover of the electronic compartment.
3. Use the Up or Down Arrow (⇧ ⇩) keys to move from one step of the configuration program to the next step.
4. Press the Enter Arrow (⏎) key. If a PASSWORD is active, enter it here. The default=0 (no password necessary). The last character in the first line of the display changes to an exclamation point (!).

   ```
   Units!
   xxx
   ```
5. Use the Up or Down Arrow (⇧ ⇩) keys to increase or decrease the value in the display or to scroll through the choices.
6. Press the Enter Arrow (⏎) key to accept a value and move to the next step of the configuration program.

The following configuration entries are the minimum required for configuration. The default password is 0.

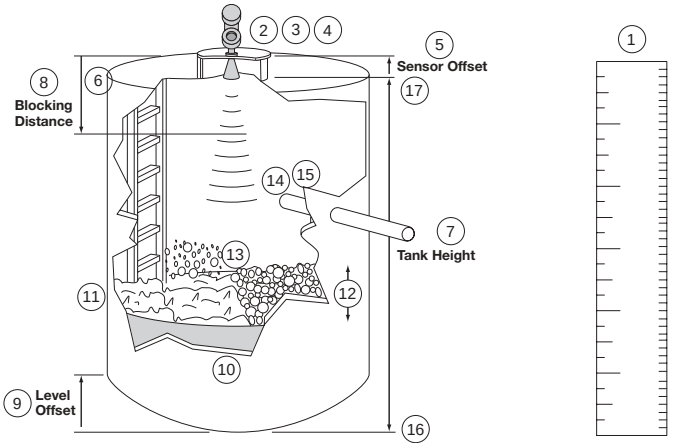


1 `Units (select)` Select the **Units** of measurement for the level readout (cm, inches, meters, feet).

2 `Antna Typ (select)` Select the **Antenna Type** to be used as printed on the transmitter nameplate; first 7 digits of model number.

3 `Antna Ext (select)` Select the **Antenna Extension** to be used as printed on the antenna nameplate; last 3 digits of model number.

4 `Antna Mnt (select)` Select the type of **Antenna Mounting** to be used.

5 `SnsrOfst xxxx` Enter the **Sensor Offset** value; the distance from the top (100%) point of the vessel to the Sensor Reference point (bottom of an NPT thread, top of a BSP thread, face of a flange).

6 `Tank Top (select)` Select the type of **Tank Top**; choices are Flat, Horizontal cylinder, Dome, Irregular, or Other (non-metallic).

7 `Tank Ht xxxx` Enter the exact **Tank Height**; inaccurate values will create inaccurate level readings.

8 `BlockDis xxxx` Enter the **Blocking Distance**; the distance close to the antenna where measurement is unreliable due to antenna ringing. Minimum value = antenna length + 2" (50 mm)

9 `LevlOfst xxx.x` Enter the **Level Offset**; the distance at the bottom of the vessel where measurement may be unreliable due to heating coils, irregular bottom, etc.

10 `Dielectrc (select)` Select the proper **Dielectric** range for the process medium.

11 `Turbulnc (select)` Select the value of **Turbulence** that corresponds to the application.

12 `RateChg (select)` Select the **Rate of Change** value that corresponds to the maximum rate the level will rise or fall.

13 `Foam (select)` Select the **Foam** value that corresponds to the application.

14 `Targets` Examine the list of reflections detected by the transmitter to ensure the actual level reflection is present. It may be necessary to rotate the launcher for optimum performance.

15 `TargRej (status)` Run the **Target Rejection** routine to cancel all false reflections in the vessel; ideally with tank empty.

16 `Set 4mA xx.x` Enter the minimum level value (0%) for the 4 mA point.

17 `Set 20mA xx.x` Enter the maximum level (100%) for the 20 mA point.

## 2.0 Complete Installation

This section provides detailed procedures for properly installing, configuring, and, as needed, troubleshooting the Pulsar Radar Level Transmitter.

### 2.1 Unpacking

Unpack the instrument carefully. Make sure all components have been removed from the packing material. Check all the contents against the packing slip and report any discrepancies to the factory.

Before proceeding with the installation, do the following:

- Inspect all components for damage. Report any damage to the carrier within 24 hours.
- Make sure the nameplate model number on the antenna and transmitter agree with the packing slip and purchase order.
- Record the model and serial numbers for future reference when ordering parts.

### 2.2 Electrostatic Discharge (ESD) Handling Procedure

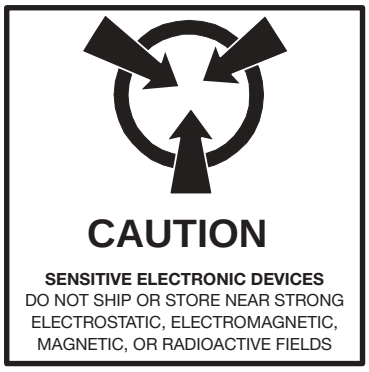


Magnetrol's electronic instruments are manufactured to the highest quality standards. These instruments use electronic components that may be damaged by static electricity present in most work environments.

The following steps are recommended to reduce the risk of component failure due to electrostatic discharge.

- Ship and store circuit boards in anti-static bags. If an anti-static bag is not available, wrap the board in aluminum foil. Do not place boards on foam packing materials.
- Use a grounding wrist strap when installing and removing circuit boards. A grounded workstation is recommended.
- Handle circuit boards only by the edges. Do not touch components or connector pins.
- Make sure that all electrical connections are completely made and none are partial or floating. Ground all equipment to a good, earth ground.

## 2.3 Before You Begin

### 2.3.1 Site Preparation

Each Pulsar Radar transmitter is built to match the specific physical specifications of the required installation. Make sure the antenna connection is correct for the threaded or flanged mounting on the vessel or tank where the transmitter will be placed. See Mounting, Section 2.4.

Make sure that the wiring between the power supply and Radar transmitter are complete and correct for the type of installation.

When installing the Radar transmitter in a general purpose or hazardous area, all local, state, and federal regulations and guidelines must be observed. See Wiring, Section 2.5.

### 2.3.2 Equipment and Tools

No special tools are needed. The following items are recommended:

- Threaded antenna and transmitter — 2" (50 mm)
- Transmitter/antenna connection — 1¾" (44 mm)
- Transmitter adjustment — 1⅛" (28 mm), 3/32" (2.5 mm) Hex
- Torque wrench — highly desirable
- Flat-blade screwdriver
- Digital multimeter or volt/ammeter — Optional
- 24 VDC (23 mA) power supply — Optional

### 2.3.3 Operational Considerations

Radar applications are characterized by three basic conditions; Dielectric, Distance (measuring range) and Disturbances (turbulence, foam, false targets, multiple reflections and rate of change). The Pulsar Radar transmitter is offered with three antenna configurations—Dielectric Rod, 4" (DN100) Horn and 6" (DN150) Horn. Ideally, the 6" (DN150) Horn antenna should be used to ensure the best possible performance in all operational conditions.

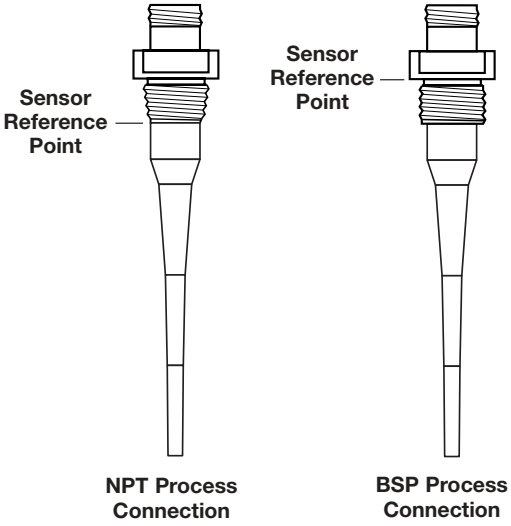


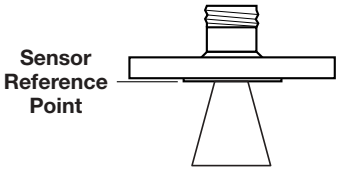


ANSI or DIN Welded Flange

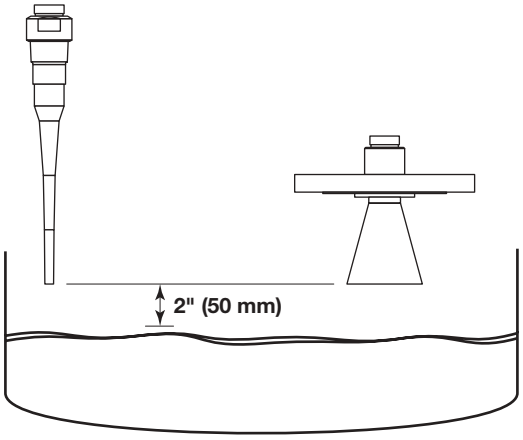


**2.3.3.1** The chart below shows the maximum measuring range (Distance) of each antenna based on fundamental conditions of Dielectric, Distance and Turbulence. Maximum distance is calculated as Tank Height + Sensor Offset (see Page 17). It is measured from the Sensor Reference Point (bottom of NPT thread, top of BSP thread or face of a flange).

**MAXIMUM DISTANCE** feet (meters)

| Dielectric | Turbulence | Dielectric Rod (1½") | 4" Horn | 6" Horn |
|---|---|---|---|---|
| 1.7-3.0 | None | 35 (10.7) | 40 (12.2 | 45 (13.7) |
| | Light, < 0.5" | 28 (8.5) | 33 (10.1) | 37 (11.3) |
| | Moderate, < 1.0" | 21 (6.4) | 26 (7.9) | 29 (8.8) |
| | Heavy, > 1.0" | 15 (4.6) | 17 (5.2) | 20 (6.1) |
| 3.0-10.0 | None | 50 (15.2) | 55 (16.8) | 60 (18.3) |
| | Light, < 0.5" | 40 (12.2 | 44 (13.4) | 48 (14.6) |
| | Moderate, < 1.0" | 30 (9.1) | 33 (10.1) | 35 (10.7) |
| | Heavy, > 1.0" | 20 (6.1) | 22 (6.7) | 25 (7.6) |
| 10.0-100 | None | 65 (2.4) | 65 (2.4) | 65 (2.4) |
| | Light, < 0.5" | 52 (15.8) | 52 (15.8 | 53 (16.2) |
| | Moderate, < 1.0" | 39 (11.9) | 39 (11.9) | 41 (12.5) |
| | Heavy, > 1.0" | 25 (7.6) | 27 (8.2) | 30 (9.1) |

### 2.3.3.2 Minimum Distance

If the liquid level is allowed onto the antenna, noise and media build-up drastically decrease reliable measurement. Liquid should not be allowed closer than 2 inches (50 mm) from the bottom of the antenna.

### 2.3.3.3 Problematic Applications; GWR Alternative

Some application concerns can be problematic for Radar. For these, Guided Wave Radar is recommended:

- Extremely low dielectric media ($\varepsilon_r$<2.0)
- Stillwells, standpipes, bridles, cages and bypass columns.
- Very weak reflections from the liquid surface, particularly during turbulence, can cause poor performance.
- Tanks heavily cluttered with false targets (mixers, pumps, ladders, pipes, etc.)
- During times of very low liquid levels of low dielectric media, the metal tank bottom may be detected deteriorating performance.
- Foam can either absorb or reflect the microwave energy depending upon the depth, dielectric, density and wall thickness of the bubbles. Due to typical variations in the amount (depth) of foam, it is impossible to quantify performance. It may be possible to receive most, some or none of the transmitted energy.
- Extremely high liquid levels (Overflow) conditions when liquid very near the antenna can cause erroneous readings and measurement failure.

***Refer to Eclipse bulletin 57-101***

## 2.4 Mounting

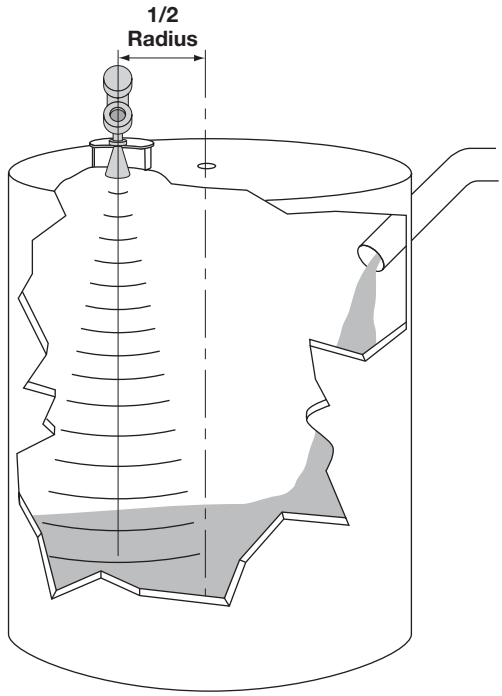


The Pulsar Radar transmitter can be mounted to a vessel using a variety of process connections. Generally, either a threaded or flanged connection is used.

### 2.4.1 Installing the Antenna

Before installing, make sure:

- Model and Serial numbers on the nameplates of the Pulsar antenna and transmitter are identical.
- Process temperature, pressure, dielectric, turbulence and distance are within the antenna specifications for the installation.
- Rod of a Dielectric Rod antenna is protected from bending or breaking; there is no metal sub-structure.
- Kynar process connection is used only in non-metallic process connections.
- Insulating material is not placed around any part of the Radar transmitter including the antenna flange.
- Protective cap is left on the antenna if the transmitter is to be installed at a later time.
- Antenna is being mounted in the optimal location. See following sections Location, Beam Angle, Obstructions and Nozzles for specific information.

#### 2.4.1.1 Location

Ideally, the Radar transmitter should be mounted providing an unobstructed signal path to the liquid surface where it should illuminate (with microwave energy) the largest, possible surface area. See Section 2.4.1.2 Beam Angle. Unavoidable obstacles will produce reflections that must be minimized during field configuration. See Section 2.6.5.1, Target Rejection.

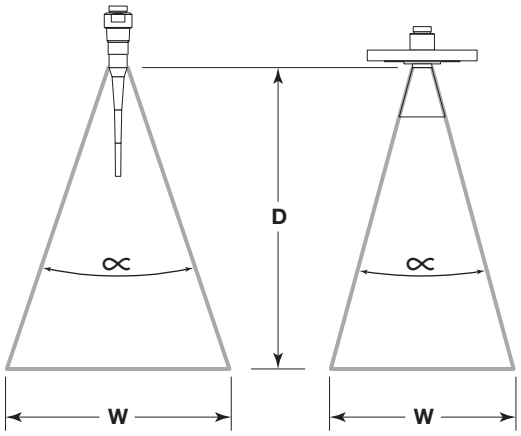


#### 2.4.1.2 Beam Angle

The various antenna designs exhibit different beam patterns. Ideally, the beam pattern should illuminate the maximum liquid surface with a minimum striking other objects in the vessel including the tank wall. Use these drawings to determine the optimum installation location.

| | Beam Spread, W @-3dB; ft (m) | | |
|---|---|---|---|
| Antenna Beam Angle (∝) | Dielectric Rod 25° | 4" Horn 25° | 6" Horn 17° |
| Distance, D | | | |
| 10 (3) | 4.5 (1.37) | 4.5 (1.37) | 3.0 (0.91) |
| 20 (6) | 8.9 (2.71) | 8.9 (2.71) | 6.0 (1.83) |
| 30 (9) | 13.3 (4.05) | 13.3 (4.05) | 9.0 (2.74) |
| 40 (12) | 17.8 (5.43) | 17.8 (5.43) | 12.0 (3.66) |
| 50 (15) | 22.2 (6.77) | 22.2 (6.77) | 15.0 (4.57) |
| 60 (18) | 26.6 (8.11) | 26.6 (8.11) | 18.0 (5.49) |
| 65 (20) | 28.9 (8.81) | 28.9 (8.81) | 19.5 (5.95) |

### 2.4.1.3 Obstructions

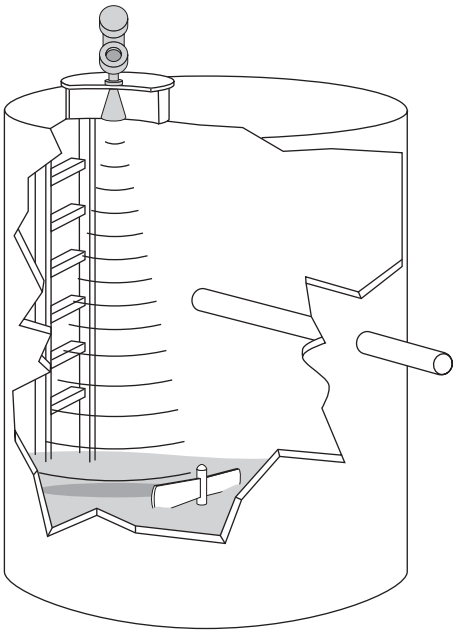

Almost any object that falls within the beam pattern will cause reflections that may be misinterpreted as a false liquid level. Although Pulsar has a powerful False Target Rejection routine, all possible precautions should be taken to minimize false target reflections with proper installation and orientation.

### 2.4.1.4 Nozzles

Improper installation in a nozzle creates “ringing” that will adversely affect measurement. The antenna should always be mounted so the active section of the antenna is a minimum of 0.5" (12mm) outside the nozzle. Antenna extensions are offered to allow the Pulsar transmitter to work reliably in nozzles with “L” dimensions of 1" (25 mm), 4" (100mm), 8" (200mm) or 12" (300mm). Standard antennas (no extension) are shown below for reference. See Section 3.6.4 for dimensional drawings of all antenna designs including nozzle extensions.

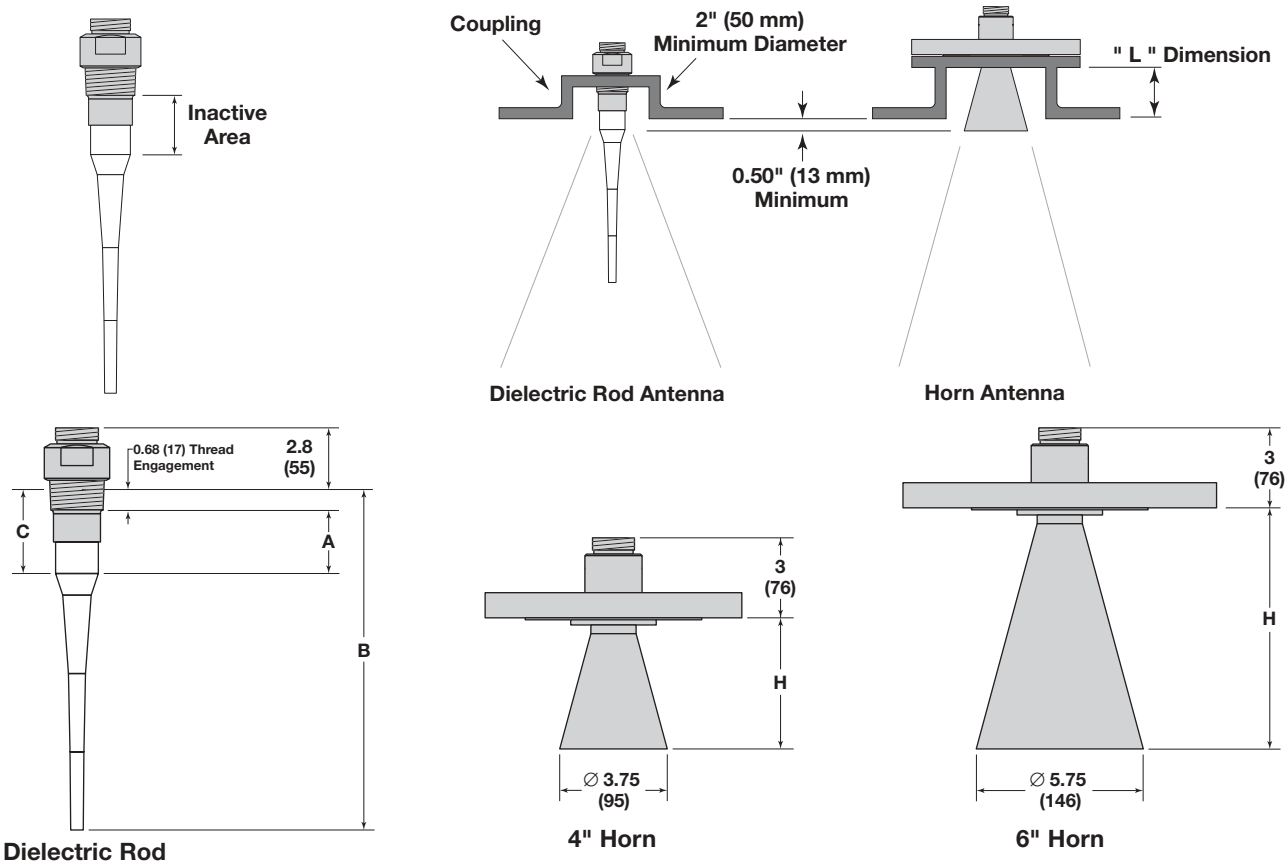


| Model # | Antenna Extension (maximum “L” dimension) | DIELECTRIC RODS | | | HORNS | |
|---|---|---|---|---|---|---|
| | | All | All | BSP | 4" | 6" |
| 8th Digit | | Dim A | Dim B | Dim C | Dim H | Dim H |
| 0 | 1" (25) | 2.3 (58) | 11.1 (282) | 3 (76) | ↓ | ↓ |
| 1 | 4" (100) | 5.1 (130) | 14 (356) | 5.9 (150) | 4.6 (117) | |
| 2 | 8" (200) | 9.1 (231) | 18 (457) | 9.9 (251) | 8.4 (213) | 8.3 (211) |
| 3 | 12" (300) | 13.1 (333) | 22 (559) | 13.9 (353) | 12.4 (315) | 12.4 (315) |

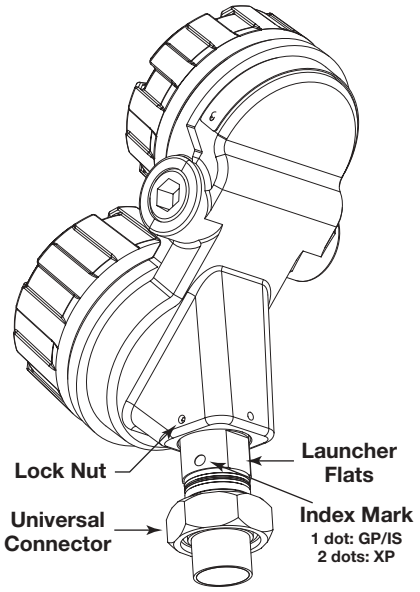


### 2.4.2 Installing the Transmitter

- Remove the protective plastic cap from the top of the antenna
- Carefully place the transmitter on the antenna
- Rotate the transmitter to face the most convenient direction for wiring, configuration and viewing. Do not tighten the universal connector (large hex nut) nor the locking nut on the housing base. The transmitter launcher must be oriented properly for optimal performance. Proceed to the next section (2.4.2.1 Orientation).
- Do not place insulating material around any part of the Radar transmitter including the antenna flange.

#### 2.4.2.1 Orientation

The Pulsar transmitter utilizes a linearly polarized, microwave beam that can be rotated to improve its performance. Proper orientation can minimize unwanted target reflections, decrease sidewall reflections (multipath) and maximize direct reflections from the liquid surface. The wrench flats located on the side of the launcher are oriented in the same direction as the polarization.

An index mark is also present for reference(1 dot: GP/IS or 2 dots: XP). The launcher is considered to be at 0° when the index mark is closest to the tank wall.

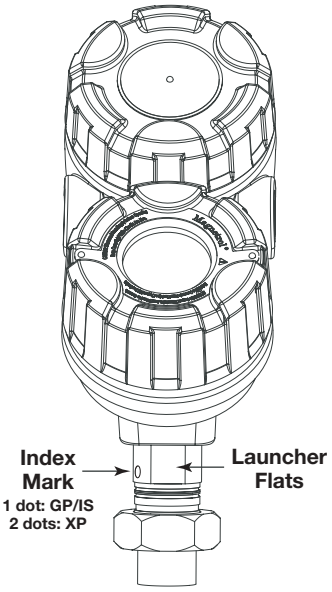


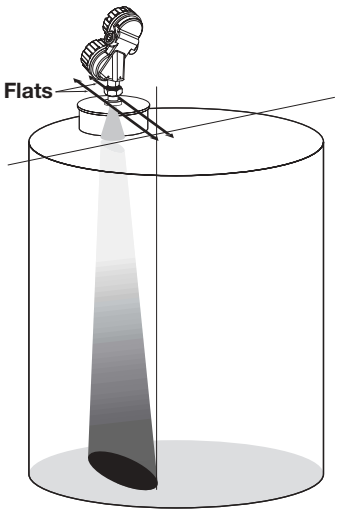


**Polarization Pattern**

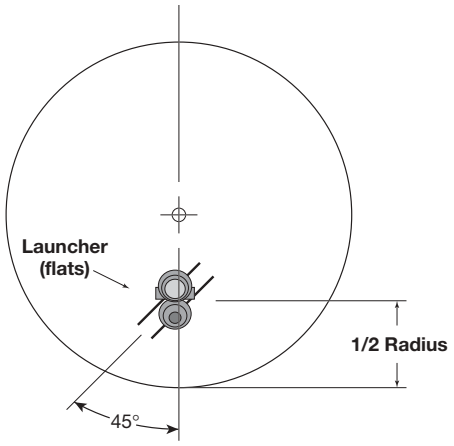


**Figure ___**

**Top View**
**Mounted ½ radius**

### 2.4.2.2 Initial Installation

Ideally, the transmitter should be mounted half the radius from the tank wall. Align the wrench flats so they are at an angle of 45 degrees to a line from the radar unit to the nearest tank wall. Once properly oriented, tighten set screws and Universal connector (30 ft-lbs of force).

A transmitter mounted within 18" (45mm) of a tank wall may demand orientation adjustments to limit multipath and optimize performance. See Section 2.4.2.3 Signal Loss.

NOTE: ALWAYS RUN THE TARGET REJECTION ROUTINE AFTER MAKING CHANGES TO MENU CHOICES (**Antenna Type**, **Antenna Mount, Sensor Offset, Tank Height, Blocking Distance, Dielectric, Turbulence, Rate Change, Foam**) or when launcher is repositioned.

### 2.4.2.3 Signal Loss

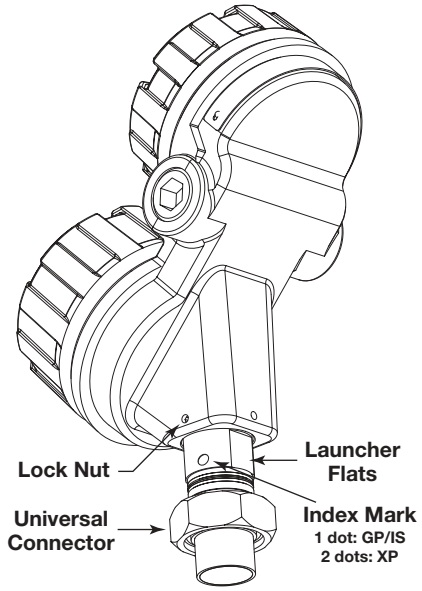


If the Level signal is lost repeatedly at a specific point in the vessel, it is usually a symptom that multipath (side-wall reflections) are causing cancellation by returning to the transmitter exactly 180° out of phase with the Level signal. Utilize the following procedure:

- Go to transmitter screen #4 which shows both Level and signal Quality.
- Bring the Level up (or down) to the exact point where the signal is repeatedly lost. Monitor the Quality value as this point is being approached. The Quality value will degrade to a low point before it begins to increase.
- At the point of poorest Quality, loosen both the Universal connector and the locking nut. Slowly rotate the launcher flats Clockwise approximately 10–20° (the transmitter can be rotated independently). Allow the unit to stabilize for approximately 1 minute. Repeat this process until the signal Quality value is optimized.
- Without disturbing the position of the launcher, position the transmitter head back to its most convenient location.
- Tighten both the Universal connector (30 ft-lbs of force) and Launcher set screw.

NOTE: ALWAYS RUN THE TARGET REJECTION ROUTINE AFTER MAKING CHANGES TO MENU CHOICES (**Antenna Type**, **Antenna Mount, Sensor Offset, Tank Height, Blocking Distance, Dielectric, Turbulence, Rate Change, Foam**) or when launcher is repositioned.

## 2.5 Wiring

**Caution** The Pulsar Radar transmitter operates at voltages of 16-36 VDC (GP), 16-28.6 VDC (IS) and 16-36 VDC (XP). Higher voltage will damage the transmitter.

Wiring between the power supply and the Radar transmitter should be made using 18-22 AWG shielded twisted pair instrument cable. Within the transmitter enclosure, connections are made to the terminal strip and the ground connections. The directions for wiring the Radar transmitter depend on the application:

- General Purpose or Non-incendive (Cl I, Div. 2)
- Intrinsically Safe
- Explosion Proof

***WARNING!*** Explosion hazard. Do not remove covers unless power has been switched off or the area is known to be non-hazardous.

### 2.5.1 General Purpose or Non-incendive (Cl I, Div. 2)

A general purpose installation does not have flammable media present. Areas rated non-incendive (Cl I, Div. 2) have flammable media present only under abnormal conditions. No special electrical connections are required. If flammable media is contained in the vessel, the transmitter must be installed per Cl I, Div. 1 standards of area classification.

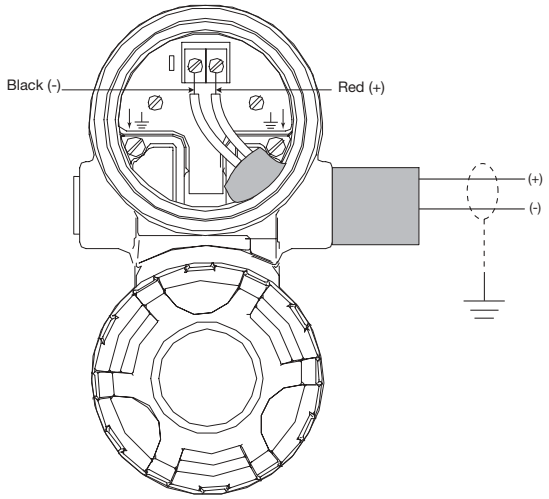


**To install General Purpose or Non-incendive wiring:**

1. Remove the cover to the wiring compartment of the transmitter. Install the conduit plug in the unused opening.
2. Install a conduit fitting and pull the supply wires.
3. Connect shield to an earth ground at power supply and leave floating at the transmitter.
4. Connect an earth ground wire to the nearest green ground screw. (Not shown in illustration.)
5. Connect the positive supply wire to the (+) terminal and the negative supply wire to the (-) terminal.
6. Replace the cover to the wiring compartment of the transmitter.

### 2.5.2 Intrinsically Safe

An intrinsically safe (IS) installation potentially has flammable media present. An approved IS barrier must be installed in the non-hazardous (safe) area.

**To install Intrinsically Safe wiring:**

1. Make sure the IS barrier is properly installed in the safe area (refer to local plant or facility procedures). Complete the wiring from the barrier to the Radar transmitter.
2. Remove the cover to the wiring compartment of the transmitter. Install the conduit plug in the unused opening.
3. Install a conduit fitting and pull the supply wires.
4. Connect shield to an earth ground at power supply and leave floating at the transmitter.
5. Connect an earth ground wire to the nearest green ground screw (not shown in illustration).
6. Connect the positive supply wire to the (+) terminal and the negative supply wire to the (-) terminal.
7. Replace the cover to the wiring compartment of the transmitter.

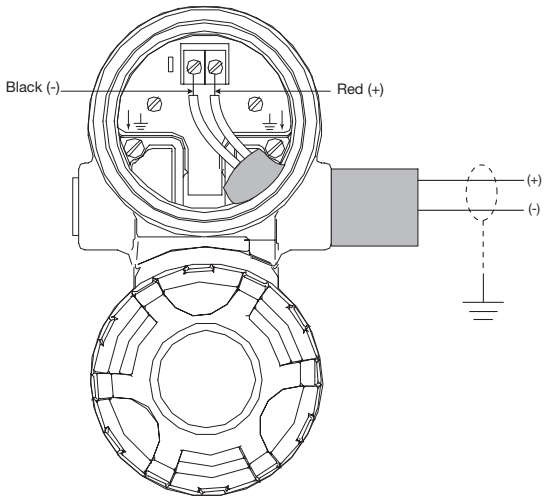


### 2.5.3 Explosion Proof

Explosion Proof (XP) is a method of designing equipment for installation in hazardous areas. A hazardous location is an area in which flammable gases or vapors are, or may be, present in the air in quantities sufficient to produce explosive or ignitable mixtures. The wiring for the transmitter must be contained in Explosion Proof conduit extending into the safe area. Due to the specialized design of the Radar transmitter, no Explosion Proof conduit fitting (EY seal) is required within 18" of the transmitter. An Explosion Proof conduit fitting (EY seal) is required between the hazardous and safe areas.

**To install Explosion Proof wiring:**

1. Install Explosion Proof conduit from the safe area to the conduit connection of the Radar transmitter (refer to local plant or facility procedures).
2. Remove the cover to the wiring compartment of the transmitter.
3. Connect shield to an earth ground at the power supply and leave floating at the transmitter.
4. Connect an earth ground wire ⏚ to the nearest green ground screw. (Not shown in illustration.)
5. Connect the Intrinsic Safety (IS) terminal to ground per NFPA 70, the CeC, or the local inspector.
6. Connect the positive supply wire to the (+) terminal and the negative supply wire to the (-) terminal.
7. Replace the cover to the wiring compartment of the transmitter.

## 2.6 Configuring the Transmitter

The Radar transmitter comes factory-calibrated and can be configured in minutes for specific applications.

Before configuring the transmitter, collect the operating parameters information. Then, power-up the transmitter on the bench and follow through the step-by-step procedures for the menu-driven transmitter display. Information on configuring the transmitter using a HART communicator is given in Configuration Using HART (Section 2.7).

### 2.6.1 Operating Parameters

Some key information is needed to configure the Radar transmitter. If necessary, complete the configuration information table in Section 1.1.2.

### 2.6.2 Setting Up for Shop Configuration

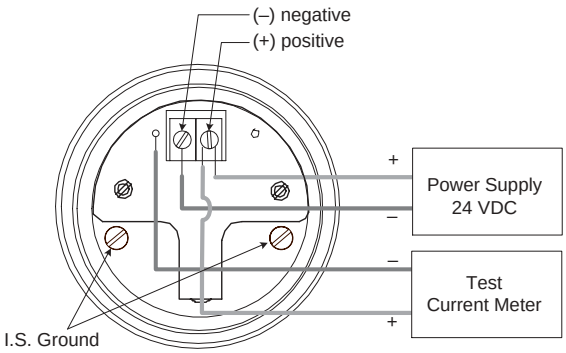


Explosion Proof Model

The Radar transmitter can be configured at a test bench by connecting a 24 VDC power supply directly to the transmitter terminals. The connections are illustrated in the accompanying diagrams. An optional digital multimeter is shown if current measurements are desired.

1. When using a HART communicator for configuration, a minimum 250 Ω line load resistance is required. See the HART communicator manual for more information.
2. The transmitter can be configured without the antenna, but disregard error messages due to the unattached antenna. Radar transmitter may indicate a LEVEL value >0 when disconnected from antenna.

### 2.6.3 Transmitter Display and Keypad

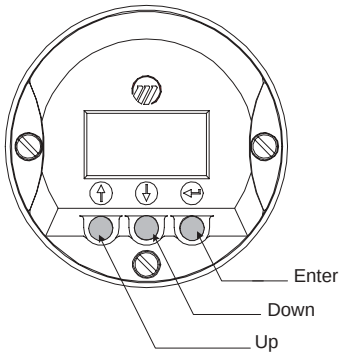


The Radar transmitter has a liquid-crystal display (LCD) capable of showing two lines of 8 characters each. Transmitter measurements and configuration menu screens are shown on the LCD.

The transmitter default display is the measurement screen. It cycles every 5 seconds to display LEVEL, %OUTPUT, QUALITY, and LOOP information. The transmitter defaults to this display after 5 minutes if no keystrokes are sensed with the exception of LEVEL, DISTANCE, %OUTPUT, QUALITY, and LOOP screens. The display will not return to the default screen if left in one of these screens.

The keypad has three arrows used to scroll through the displays and to calibrate the transmitter – the Up and Down Arrow (⇧ ⇩) keys and the Enter (⏎) key.

| Arrows | Function in Display Mode | Function in Configuration Mode |
|---|---|---|
| Up and Down ⇧ ⇩ | Moves forward and backward in the configuration program from one display to another. | Increases or decreases the value displayed or moves to another choice.<br>*Note: Hold arrow key for rapid scrolling.* |
| Enter ⏎ | Enters the configuration mode (noted by an exclamation point as the last character in the top display line). | Accepts a value and moves to the next step of the configuration program. |

### 2.6.4 Password Protection (Default = 0)

The Radar transmitter is password protected to restrict access to certain portions of the menu structure that affect the operation of the system. When the proper password is entered, an exclamation point (!) appears as the last character of the first line of the display. The password can be changed to any numerical value up to 255. The password is required whenever configuration values are changed.

The default password installed in the transmitter at the factory is 0 (password disabled). The last step in the configuration menu provides the option to enter a new password. If 0 is entered as a password, the transmitter is no longer password protected and any value in the menu can be altered (except diagnostic values) without entering a confirming password.

NOTE: If the password is not known, the menu item New Password displays an encrypted value representing the present password. Call the factory with this encrypted value to determine the actual password.

## 2.6.5 Menu: Step-By-Step Procedure

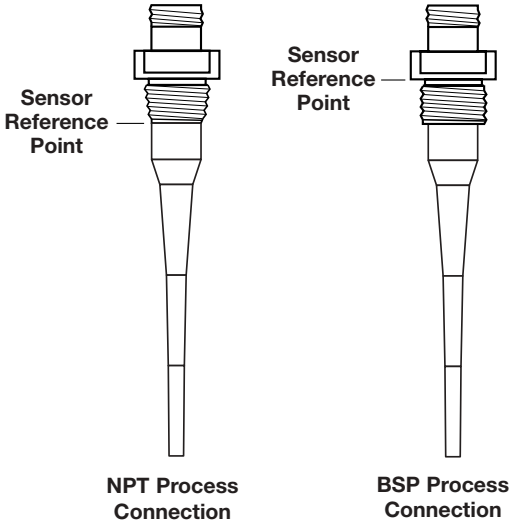


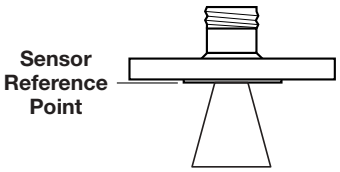


ANSI or DIN Flange (Welded)

The following table provides a complete explanation of the software menus displayed by the Radar transmitter. Use this table as a step-by-step guide to configure the transmitter.

The first column presents the menus shown on the transmitter display. The displays are in the order they would appear if the arrow keys were used to scroll through the menu. The numbers are not shown on the display. They are provided as a reference.

The second column provides the actions to take when configuring the transmitter. Additional information or an explanation of an action is given in the third column.

The following drawings are provided as reference for the configuration procedure.

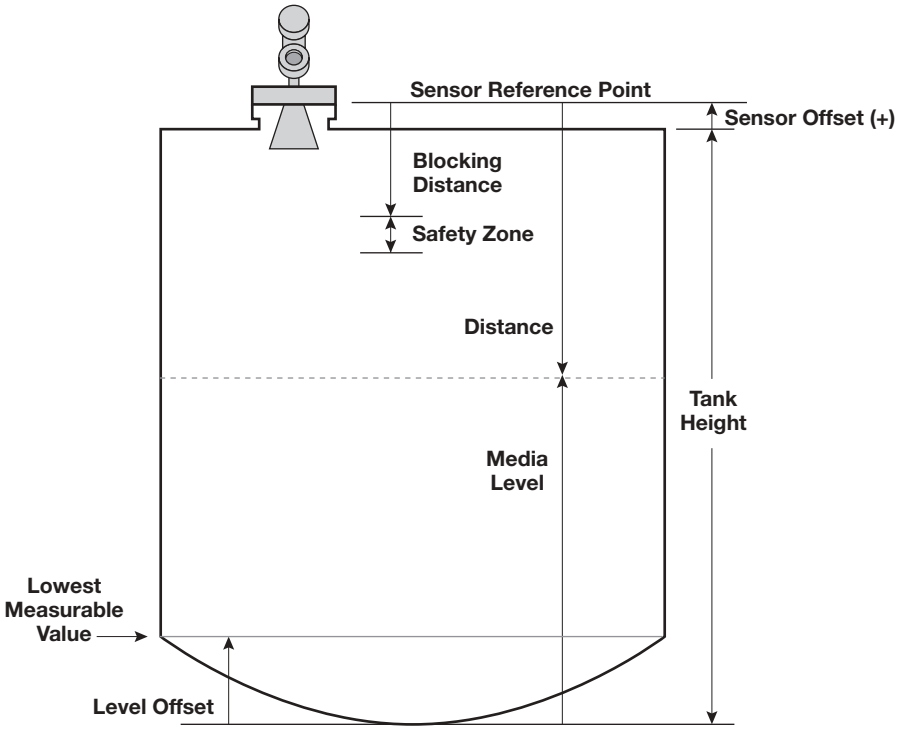

### 2.6.5.1 Radar Transmitter Menu Table

| | Display | Action | Comment |
|---|---|---|---|
| 1 | *Level*<br>*Quality*<br>*%Output*<br>*Loop* | Transmitter Display | Transmitter default display. *Level*, *Signal Quality*, *%Output*, and *Loop* values cycle every 5 seconds. All screens (except 2–6) default to this screen after 5 minutes of no keystrokes or if a Fault or Warning message is displayed. |
| 2 | Level<br>xxx.x units | Transmitter Display | Transmitter displays *Level* measurement in chosen unit of measure. |
| 3 | Distance<br>xxx.x units | Transmitter Display | Transmitter displays *Distance* measurement in chosen unit of measure. Measurement includes *Sensor Offset* value. |
| 4 | Qual xx<br>xxx.x units | Transmitter Display | Transmitter display showing *Level* and *Quality* of signal reflection. Good values are 20–90 |
| 5 | %Output<br>xx.x% | Transmitter Display | Transmitter displays *%Output* measurement derived from 20 mA span. |
| 6 | Loop<br>xx.xx mA | Transmitter Display | Transmitter displays *Loop* value (mA). |
| 7 | Units<br>(select) | **Select** units of measure | Select **cm** (xxxx), **inches** (xxx.x), **meters** (xx.xx) or **feet** (xx.xx). Allowable decimal position is controlled; four characters is maximum reading. Decimal position is controlled by *Units* and *Tank Height*. |
| 8 | AntnaTyp<br>(select) | **Select** the *Antenna Type* used. | Select first 7 digits of the Model Number (first 4 are significant). Information is located on the nameplate mounted on the side of transmitter housing. Pressing ENTER exposes the *Antenna Extension* pop-up screen. |
| 9 | AntnaExt<br>(select) | **Select** the *Antenna Extension* used. | Select last 3 digits of the Model Number corresponding to the Antenna Extension. This relates to the maximum nozzle length where it can be used:<br>0** ≤ 1" (25 mm), -1** ≤ 4" (100 mm), -2** ≤ 8" (200 mm), -3** ≤ 12" (300 mm) |
| 10 | AntnaMnt<br>(select) | **Select** the type of *Antenna Mounting* | Select **NPT**, **BSP**, or **Flange** |
| 11 | SnsrOfst<br>xx.x units | **Enter** the *Sensor Offset* value. | *Sensor Offset* is the distance (+ or -) from the Sensor reference point (bottom of NPT thread or flange face, top of BSP thread) to the top of the tank. |
| 12 | Tank Top<br>(select) | **Select** the shape/type of tank top | Select the metallic tank top structure: **Flat**, **Horizontal Cylinder**, **Dome**, **Irregular**, or **Other (non-metallic)**. |
| 13 | Tank Ht<br>xxx.x units | **Enter** the *Tank Height* | *Tank Height* is distance from the bottom to the top of tank. |
| 14 | Block Dis<br>xxx.x units | **Enter** the *Blocking Distance* | *Blocking Distance* defines an area near the antenna where reflections can not be measured effectively due to antenna ringing. It is measured from the *Sensor Reference* point. Recommended value is 6" (2" minimum); larger values are encouraged. Output will be held at value corresponding to *Blocking Distance*. Do not allow liquid on to the antenna. |
| 15 | LevlOfst<br>xxx.x units | **Enter** the *Level Offset* | *Level Offset* defines an area at the bottom of the vessel where reflections can not be measured effectively due to angled bottoms, heating coils, reflections from metal tank bottom in low dielectric applications, etc. It is the distance from the bottom of the tank to the lowest valid level reading. Level reading will never be lower than *Level Offset* value. |
| 16 | Dielctrc<br>(select) | **Select** the *Dielectric* range value | Select the Dielectric range of the medium. Choices are: **1.7–3.0**; **3.0–10.0**; **10.0–100.0** |

| | Display | Action | Comment |
|---|---|---|---|
| 17 | `Turbulnc (select)` | **Select** amount of *Turbulence* of the liquid | **None**, **Light**, **Medium**, **Heavy**. Increase choice if Quality value is consistently <20. |
| 18 | `RateChng (select)` | **Select** *Rate of Change* of the liquid | Select the MAXIMUM *Rate of Change* of the level surface (rising or falling) in inches (cm)/minute;<br>**<5 (13)**, **5-20 (13-50)**, **20-60 (50-150)**, **>60 (>150)** |
| 19 | `Foam (select)` | **Select** amount of *Foam* | **None**, **Light**, **Medium**, **Heavy**<br>Increase choice if Quality value is consistently <20. |
| 20 | `Targets` | **Press** Enter to view all *Targets* | Review all Targets detected by the transmitter including false targets (targets other than Level). Ensure the proper Level target is available then move to *False Target Rejection*. If reported LEVEL is close to actual and the Quality number is >20, it is probably correct. Check the *Tank Height* and *Sensor Offset* values to ensure accurate LEVEL reading. Liquid level can be viewed by LEVEL or DISTANCE; access under MODE sub-menu. Choose ESCAPE to exit |
| 21 | `Targ Rej (status)` | **Select YES** to store false target profile for Empty or Partially full tank.<br><br>Unit will show **Enabled** after running the routine. *False Target Rejection* can be suspended for troubleshooting purposes by choosing **Disable**. | • Do not proceed with this procedure until confirming LEVEL and QUALITY values in TARGETS screen.<br>• FALSE TARGET REJECTION should be run with vessel at or near empty when all targets are exposed; re-run this routine if initial calibration is done with significant liquid in vessel.<br>• The false target profile will be disabled and this routine should be re-run if the following parameters are modified: ANTENNA TYPE, ANTENNA MOUNT, SENSOR OFFSET, TANK HEIGHT, BLOCKING DISTANCE, DIELECTRIC, TURBULENCE, RATE CHANGE, FOAM or when launcher is repositioned.<br>The NO FALSE TARGET REJECTION message will be displayed if this algorithm is not enabled.<br>The *Target Rejection* routine detects, stores and cancels false targets to ensure detection of the proper level signal.<br>1 Choose if Tank is **Empty** or **Partial** (some liquid present)<br>2a If **Empty** is chosen, press Enter, then select YES to run false target rejection routine for entire tank.<br>2b If **Partial** is chosen, various *Level* targets will be offered; choose the Target reflection that represents the actual *Level*; all other targets will be cancelled.<br>3 If correct *Level* is not offered, ensure Tank dimensional information is correct; information must be entered correctly to ensure reflections offered show correct *Level* values.<br>4 If Level cannot be found, manually enter correct value. Choose **Entr Lvl**, then enter the correct level value. |
| 22 | `Set 4mA xxx.x units` | **Enter** the value for the *4 mA* point | During normal operation, mA value will never read into the area defined by the *Level Offset* value. Refer to #15. |
| 23 | `Set 20mA xxx.x units` | **Enter** the value for the *20 mA* point | During normal operation, mA value will never read into the area defined by the *Blocking Distance* value. Refer to #14. |
| 24 | `Damping xx` | **Enter** the *Damping* factor | A damping factor (0–45) may be added to smooth a noisy display and/or output due to turbulence. |

| | Display | Action | Comment |
|---|---|---|---|
| 25 | SysFault (select) | **Select** the system *Fault* value | Select **3.6 mA**, **22 mA** or **HOLD** (last value). See Section 3.3.2 for Fault information. |
| 26 | LOEFault (select) | **Select** the *Loss of Echo Fault* value | Select **3.6 mA**, **22 mA** or **HOLD** (last value). |
| 27 | LOEDelay (xxx sec) | **Enter** value for Loss of Echo Delay | Select a value 0–255; 30 is default |
| 28 | SZ Fault (select) | **Select** the *Safety Zone Fault* | *Safety Zone* is a user-defined area just below the *Blocking Distance*. See drawing on page 17. Enable Fault if necessary to ensure safe, reliable high-level readings in critical applications. Choices are **None, 3.6 mA**, **22 mA**, **Latch 3.6** or **Latch 22**. If **Latch 3.6** or **Latch 22** is chosen, the loop current will remain in alarm until it is manually cleared with the SZ Alarm Reset below (#30) |
| 29 | SZHeight (xx.x units) | **Enter** a *Safety Zone Height* | Enter a distance value that develops a safety zone just below the *Blocking Distance*. Here the unit will report a *Safety Zone Fault* (#28) if the level rises into this area. |
| 30 | SZ Alarm Reset | **Reset** *Safety Zone Latch* | Clear a latched *Safety Zone* alarm. |
| 31 | Poll Adr (xx) | **Enter** HART *Poll Address* number | Enter a HART *Poll Address* (0–15). Enter 0 for a single transmitter installation; enter 1–15 for multi-drop network. |
| 32 | Trim 4 | **Fine tune** the 4 mA point | Attach a mA meter to the output. If the output does not equal 4.00 mA, adjust the value on the display until meter reads 4.00 mA. |
| 33 | Trim 20 | **Fine tune** the 20 mA point | Attach a mA meter to the output. If the output does not equal 20.00 mA, adjust the value on the display until meter reads 20.00 mA. |
| 34 | Trim Lvl xxx.x units | **Fine Tune** the *Level* value | *Trim Lvl* is an offset value to be used to force the transmitter to output the exact Level. This should only be used after all parameters have been entered correctly, *Tank Height* and *Sensor Offset* have been confirmed accurate and it has been confirmed that the transmitter is tracking the correct level target. |
| 35 | Loop Tst xx.xx mA | **Enter** a mA Output value | Enter a mA Output of any given value to perform loop test. |
| 36 | New Pass xxx | **Enter** new *Password* | Use arrows to select desired value between 0 and 255; 0=No Password. During normal operation, an encrypted password is shown. |
| 37 | Status | **Review** *Status* information | *Status* information is updated continuously showing only the most recent diagnostic events. See *Diagnostic* screen in Factory Menu for a cumulative review. |
| 38 | Language | **Select** *Language* | Select the *Language* that will be displayed on the transmitter screen. |
| 39 | ModelRX5 Verxx.xx | Revision information | Processor firmware Rev level<br>Coprocessor firmware Rev level (HART units only) |

It is encouraged that all setup information be recorded for future use.
Table on page 45 is offered for this information.

| | Display | Action | Comment |
|---|---|---|---|
| 40 | Disp Fact | **Review** *Factory* parameters | Select **YES** to reveal Factory parameters; **NO** to hide |
| 41 | Diagnost | **Review** *Diagnostic* messages | A cumulative review of all diagnostic messages |
| 42 | Launcher | None, do not adjust | Diagnostic, factory setting |
| 43 | Fact Cal | None, do not adjust | Diagnostic, factory setting |
| 44 | Peaks | None, do not adjust | Diagnostic, factory setting |
| 45 | Algorithm | None, do not adjust | Diagnostic, factory setting |
| 46 | Range | None, do not adjust | Diagnostic, factory setting |
| 47 | TVG Type | None, do not adjust | Diagnostic, factory setting |
| 48 | TVG Max | None, do not adjust | Diagnostic, factory setting |
| 49 | Fid Pos | None, do not adjust | Diagnostic, factory setting |
| 50 | Fid Gain | None, do not adjust | Diagnostic, factory setting |
| 51 | Sys Gain | None, do not adjust | Diagnostic, factory setting |
| 52 | Conversion Factor | None, do not adjust | Diagnostic, factory setting |
| 53 | Cef dm/s | None, do not adjust | Diagnostic, factory setting |
| 54 | Scale Offset | None, do not adjust | Diagnostic, factory setting |
| 55 | Distance Correction | None, do not adjust | Diagnostic, factory setting |
| 56 | Echo Amp | None, do not adjust | Diagnostic, factory setting |
| 57 | #Run Average | None, do not adjust | Diagnostic, factory setting |
| 58 | Adaptive Filter | None, do not adjust | Diagnostic, factory setting |
| 59 | #Adap Average | None, do not adjust | Diagnostic, factory setting |
| 60 | Scatter High | None, do not adjust | Diagnostic, factory setting |
| 61 | Rate High | None, do not adjust | Diagnostic, factory setting |
| 62 | Scatter Rate | None, do not adjust | Diagnostic, factory setting |
| 63 | Peak Detect Threshold | None, do not adjust | Diagnostic, factory setting |
| 64 | Peak Detect Reference | None, do not adjust | Diagnostic, factory setting |
| 65 | Minimum Threshold | None, do not adjust | Diagnostic, factory setting |
| 66 | ROC/min | None, do not adjust | Diagnostic, factory setting |
| 67 | Max Rate | None, do not adjust | Diagnostic, factory setting |
| 68 | Max dD | None, do not adjust | Diagnostic, factory setting |
| 69 | SZ Hysteresis | None, do not adjust | Diagnostic, factory setting |
| 70 | DataLog | None, do not adjust | Diagnostic, factory setting |
| 71 | SZ Hysteresis | None, do not adjust | Diagnostic, factory setting |
| 72 | DataLog | None, do not adjust | Diagnostic, factory setting |

## 2.7 Configuration Using HART

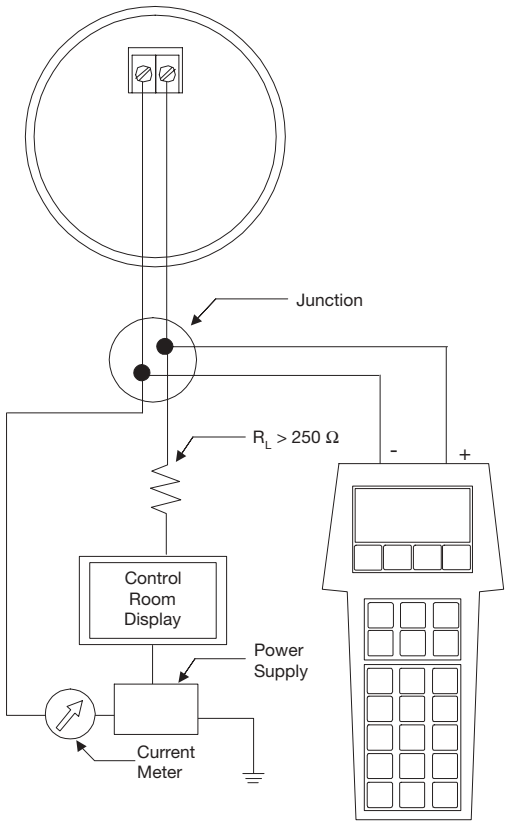


A HART (Highway Addressable Remote Transducer) remote unit, such as a HART communicator, can be used to provide a communication link to the Pulsar transmitter. When connected to the control loop, the same system measurement readings shown on the transmitter are shown on the communicator. In addition, the communicator can be used to configure the transmitter.

To confirm HART hand-held communications, attach unit per Section 2.7.1. If communicator reads GENERIC on first two lines, the HART hand-held does not contain the current DDs (device description) for the Pulsar Radar transmitter. Contact your local HART Service Center and specify a Magnetrol Pulsar Model RX5 device descriptor.

See HART Revision Table, Section 2.7.3

### 2.7.1 Connections

A HART communicator can be operated from a remote location by connecting it to a remote junction or by connecting it directly to the terminal block in the electronics housing of the Pulsar transmitter.

HART uses the Bell 202 frequency shift key technique of high-frequency digital signals. It operates on the 4-20 mA loop and requires 250 Ω load resistance. A typical connection between a communicator and the Pulsar transmitter is illustrated.

### 2.7.2 Display Menu

A typical communicator display is an 8-line by 21-character LCD. When connected, the top line of each menu displays the model (Model RX5) and its tag number or address. Usually the bottom line of each menu is reserved for software-defined function keys (F1-F4). For detailed operating information, refer to the instruction manual provided with the HART communicator.

The Pulsar transmitter online menu trees are shown in the following illustration. Open the menu by pressing the alphanumeric key 1, Device Setup, to display the second-level menu.

### 2.7.3 HART Revision Table

#### 2.7.3.1 Model RX5

| HART Version | HCF Release Date | Compatible with RX5 Software |
|---|---|---|
| Dev V2 DD V1 | July 2003 | Version 1.1a |

## 2.7.4 HART Menu

- 1 Device Setup
  - 1 Lvl
  - 2 Quality
  - 3 % Out
  - 4 Loop
  - 5 Distance
- 1 Calibration
  - 1 Units
  - 2 Antenna Type
  - 3 Antenna Extension
  - 4 Antenna Mount
  - 5 Sensor Offset
  - 6 Tank Top
  - 7 Tank Height
  - 8 Blocking Distance
  - 9 Level Offset
  - 10 Dielectric
  - 11 Turbulence
  - 12 Rate of Change
  - 13 Foam
  - 14 Targets
  - 15 Target Rej
  - 16 4 mA Set Point
  - 17 20 mA Set Point
  - 18 Damping
  - 19 Fault State
  - 20 LOE Fault State
  - 21 LOE Delay
  - 22 SZ Fault
  - 23 SZ Height
  - 24 SZ Reset
  - 25 Trim Level
  - 26 Date/Time/Initials
- 2 Basic Setup
  - 1 Tag
  - 2 Descriptor
  - 3 Date
  - 4 Message
  - 5 Poll addr
  - 6 Final Asmbly Num
- 3 Advanced Setup
  - 1 Trim 4 mA Point
  - 2 Trim 20 mA Point
  - 3 Enter Password
  - 4 Factory Settings
    - 1 Launcher
    - 2 Algorithm
    - 3 Range
    - 4 TVG Type
    - 5 TVG Max
    - 6 Fiducial Position
    - 7 Fiducial Gain
    - 8 System Gain
    - 9 Conversion Factor
    - 10 CF #Run Average
    - 11 Ceff
    - 12 Scale Offset
    - 13 Distance Corr
    - 14 #Run Average
    - 15 Adaptive Filter
    - 16 #Adaptive Average
    - 17 Scatter High Limit
    - 18 Rate High Limit
    - 19 Peak Detect Thresh
    - 20 Peak Detect Ref
    - 21 Min Threshold
    - 22 Max Rate
    - 23 Max Delta Distance
    - 24 SZ Hysteresis
    - 25 DataLog
  - 5 Magnetrol S/N
  - 6 Device ID
  - 7 New User Password
- 4 Diagnostics
  - 1 Loop Test
  - 2 Echo Amplitude
  - 3 Peaks
  - 4 Diagnostic Info
  - 5 Warnings
  - 6 Faults
  - 7 Range
  - 8 Ceff
  - 9 Scatter Rate
  - 10 ROC per Minute
- 5 Review
  - 1 Model
  - 2 Manufacturer
  - 3 Magnetrol, S/N
  - 4 Firmware Version
  - 5 Coprocessor Version
  - 6 Tag
  - 7 Descriptor
  - 8 Date
  - 9 Message
  - 10 Final Asmbly Num
  - 11 Device ID
  - 12 Poll Address
  - 13 Units
  - 14 Antenna Type
  - 15 Antenna Extension
  - 16 Antenna Mount
  - 17 Sensor Offset
  - 18 Tank Top
  - 19 Tank Height
  - 20 Blocking Distance
  - 21 Level Offset
  - 22 Dielectric
  - 23 Turbulence
  - 24 Rate of Change
  - 25 Foam
  - 26 Target Rej Status
  - 27 Target Rej Type
  - 28 4 mA Set Point
  - 29 20 mA Set Point
  - 30 Damping
  - 31 System Fault State
  - 32 LOE Fault State
  - 33 LOE Delay
  - 34 SZ Fault State
  - 35 SZ Height
  - 36 Trim Level
  - 37 Date/Time/Initials
  - 38 Launcher
  - 39 Algorithm
  - 40 TVG Type
  - 41 TVG Max
  - 42 Fiducial Position
  - 43 Fiducial Gain
  - 44 System Gain
  - 45 Conversion Factor
  - 46 CF #Run Average
  - 47 Ceff
  - 48 Scale Offset
  - 49 #Run Average
  - 50 Adaptive Filter
  - 51 #Adaptive Average
  - 52 Scatter High Limit
  - 53 Rate High Limit
  - 54 Peak Detect Thresh
  - 55 Peak Detect Ref
  - 56 Min Threshhold
  - 57 Max Rate
  - 58 Max Delta Distance
  - 59 SZ Hysteresis
  - 60 DataLog
  - 61 4 mA Trim Value
  - 62 20 mA Trim Value
  - 63 Universal Rev
  - 64 Fld Dev Rev
  - 65 Software Rev
  - 66 Num Req Preams

# 3.0 Reference Information

This section presents an overview of the operation of the Pulsar Radar Level Transmitter, information on troubleshooting, common problems, listings of agency approvals, lists of replacement and recommended spare parts, and detailed physical, functional and performance specifications.

## 3.1 Description

Pulsar is a two-wire, 24 VDC, level transmitter based on the concept of pulse burst radar. The electronics are housed in an ergonomic housing comprised of two tandem compartments angled at a 45 degree angle for ease of wiring and calibration. These two compartments connect via an explosion-proof and watertight feed-through.

## 3.2 Theory of Operation

### 3.2.1 Pulse Burst Radar

Pulsar is a top-mounted, downward-looking pulse burst radar operating at 5.8GHz (Europe) or 6.3 GHz (North America). Unlike true pulse devices that transmit a single, sharp (fast rise-time) waveform of wide-band energy, Pulsar emits short bursts of 5.8 or 6.3GHz energy and measures the transit time of the signal reflected off the liquid surface. Distance is calculated utilizing the equation Distance = C × Transit time/2, then developing the Level value by factoring in Tank Height and Sensor Offset information. The exact reference point for distance and level calculations is the Sensor Reference Point- bottom of an NPT thread, top of a BSP thread or face of a flange.

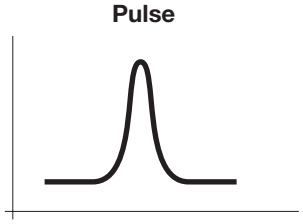


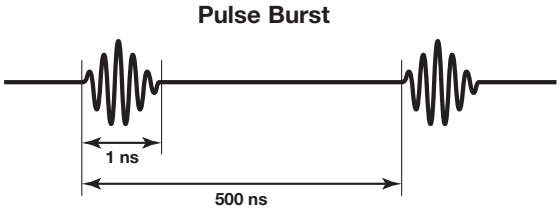


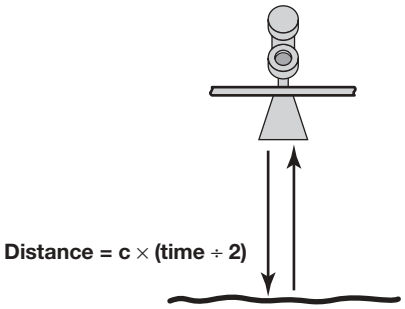


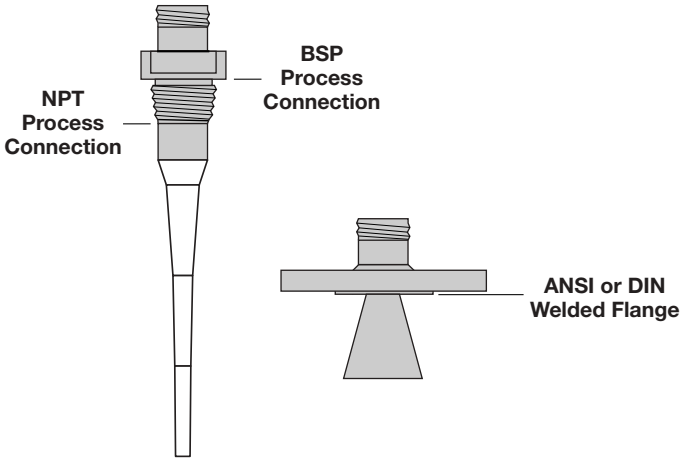


Sensor Reference Point

The exact level measurement is extracted from false target reflections and other background noise via the use of sophisticated signal processing. The new Pulsar circuitry is extremely energy efficient so no duty cycling is necessary to accomplish effective measurement. For this reason, Pulsar can track high rates of change that were heretofore impossible with existing loop-powered radar transmitters.

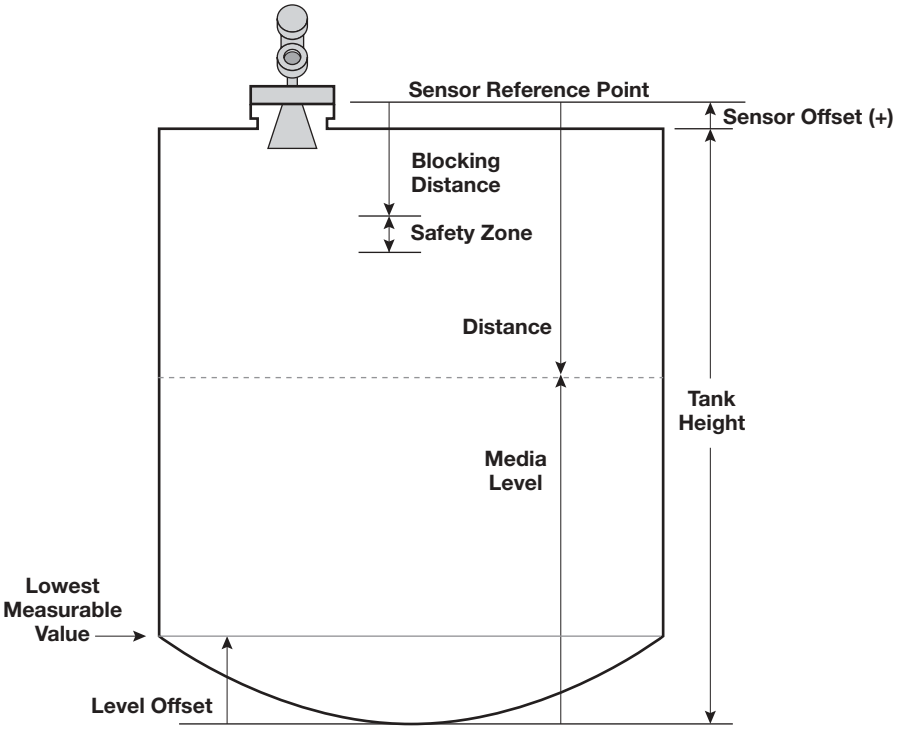


### 3.2.2 Equivalent Time Sampling

ETS, or Equivalent Time Sampling, is used to measure the high speed, low power EM (electromagnetic) energy. ETS is a critical key in the application of Radar to vessel level measurement technology. The high speed electromagnetic energy (1000 ft/µs) is difficult to measure over short distances and at the resolution required in the process industry. ETS captures the EM signals in real time (nanoseconds) and reconstructs them in equivalent time (milliseconds), which is much easier to measure with today's technology.

ETS is accomplished by scanning the tank to collect thousands of samples. The round-trip event on a 65 foot (20m) tank takes only 133 nanoseconds in real time. After it is reconstructed in equivalent time it measures 200 milliseconds.

## 3.3 Troubleshooting

The Pulsar transmitter is designed and engineered for trouble-free operation over a wide range of operating conditions. Common transmitter problems are discussed in terms of their symptoms and recommended corrective actions.

***WARNING!*** Explosion hazard. Do not remove covers unless power has been switched off or the area is known to be non-hazardous.

### 3.3.1 Troubleshooting System Problems

| Symptom | Problem | Solution |
|---|---|---|
| Level reading drops out at a repeatable position in the vessel | Multipath is cancelling good level signal | Orient launcher to reduce multipath; turn launcher 20-30 degrees at a time until multipath at this point disappears. Refer to Section 2.4.2.1 |
| Level reading locked onto a value that is not correct Level | Measurement engine finding a reflection it believes is level signal | 1. Is high dielectric ($\varepsilon$>20) foam present<br>2. Run False Target Rejection routine with Level below this point (or with Empty tank) to eliminate false echoes |
| LEVEL, % Output and LOOP values are all inaccurate | Basic configuration data questionable | 1. Check validity of all configuration data<br>2. Check DISTANCE value of device against manually measured distance |
| LEVEL readings are repeat-able but consistently high (or low) from actual by a fixed amount | Configuration data does not accurately match tank dimensions | 1. Ensure proper values for Tank Height and Sensor Offset<br>2. Check vessel for present liquid level. Trim Level can be used to ensure exact measurement<br>3. Reconfigure LOOP values if necessary |
| LEVEL reading on Display is correct but LOOP is stuck at 4 mA | HART Poll Address set a value of 1-15 | Set HART Poll Address to 0 |
| LEVEL reading on Display stuck at value related to Blocking Distance | Device believes antenna is flooded (level very near or on antenna) | Check actual level. If antenna is not flooded, power down, then power up transmitter with the level well below the antenna. |

### 3.3.2 Error Messages

The Pulsar Radar transmitter utilizes a 3-section hierarchy for reporting diagnostic conditions: FAULTS, WARNINGS, and INFORMATION. This information can be reviewed at the STATUS screen in the user menu. This screen captures only current conditions. Historical information can be viewed at the DIAGNOSTIC screen in the Factory menu.

**FAULT:** The highest level in the hierarchy of diagnostics annunciating a defect or failure in circuitry or software that precludes reliable measurement. The current (mA) value unit defaults to 3.6, 22, or HOLD and a message is displayed on the rotating screen. Further error information can be obtained by viewing the Status or Diagnostic (Factory Menu) screens.

**WARNING (MESSAGE):** The second level in the hierarchy of Diagnostics annunciating conditions that are not fatal but may affect measurement. A message will occur on the main (rotating) screen when a Warning is detected but will not affect output current. Further error information can be obtained by viewing the Status or Diagnostic screens.

**INFORMATION (MESSAGE):** The lowest level in the hierarchy of diagnostic conditions providing operational factors that are not critical to measurement. Further error information can be obtained by viewing the Status or Diagnostic (Factory Menu) screens.

**EFFECTS OF EACH DIAGNOSTIC MESSAGE**

| | mA Loop | Display Message | Diagnostic (history) |
|---|---|---|---|
| **Fault** | 3.6/22/HOLD | Yes | Yes |
| **Warning** | No Effect | Yes | Yes |
| **Information** | No Effect | No | Yes |

## ERROR MESSAGES

| | Symptom | Problem | Solution |
|---|---|---|---|
| **Faults** | Echo Lost | Target peak cannot be found | • Increase Turbulence setting<br>• Decrease Dielectric setting<br>• Increase ROC setting<br>• Increase LOE delay<br>• Confirm valid False Target Rejection; re-run if necessary<br>• Possible multipath if lost repeatedly at same point in tank (See Section 2.4.2.3) |
| | No Fiducial | Can not find valid fiducial signal | Ensure transmitter/antenna Universal connector is tight; Consult Factory if this problem persists |
| | Safety ZoneAlrm | Level within Safety Zone and SZ Alarm parameters enabled | Normal operation; modify SZ Alarm parameter screens if not operating to expectations |
| | Corrupt Paramtrs | Configuration parameters are incorrect for application | Modifying one parameter clears this condition; check validity of all parameters |
| | Sfwr Err Inv Arg | Software algorithms corrupted | Consult Factory |
| | EE Write failure | EEPROM Write failure | Consult Factory |
| | EE Read failure | EEPROM Read failure | Consult Factory |
| | CPU failure | Microprocessor failure | Consult Factory |
| **Warnings** | NoTrgRej | False Target Rejection has not been run or manually disabled | Re-run False Target Rejection routine or manually enable |
| | CorptTgR | Invalid False Target Rejection data | Re-run False Target Rejection routine;<br>Consult Factory if problem persists |
| | Bad Fid | Fiducial signal quality questionable | Ensure transmitter/antenna connection is tight; Consult Factory |
| | OutofCal | Invalid Calibration Data | Transmitter requires re-calibration of Factory parameters; the instrument will continue to operate with reduced performance; Consult Factory |
| **Information** (available only in Status or Diagnostic screens) | **Co-processor Communications** | | |
| | IPC bus | Internal communication error | Consult Factory |
| | IPC chks | Internal communication error | Consult Factory |
| | IPC leng | Internal communication error | Consult Factory |
| | IPC ack | Internal communication error | Consult Factory |
| | **Signal** | | |
| | DC Noise | Excessive noise on A/D channel | Consult Factory |
| | Signal Too High | Level signal amplitude excessive | Choose higher Dielectric range, reduce Turbulence or Foam settings; Consult Factory if problem persists |
| | Signal Too Low | Level signal amplitude insufficient | Choose lower Dielectric range, increase Turbulence or Foam settings; Consult Factory if problem persists |
| | **Quality** | | |
| | CluOffHi | False target only partially captured | Re-run False Target Routine with level lower in vessel |
| | ScattTgt | Return signals scattered due to turbulence | |
| | UncerTgt | Target is missing but not determined to be lost | Device is holding last valid value while confirming the target position; will continue based upon setting in LOE Delay screen; Consult Factory if problem persists |
| | TankInv | Tank dimensions exceed maximum range of the transmitter | Reduce Tank Height and/or Sensor Offset values |

## 3.4 Agency Approvals

| AGENCY | MODEL | PROTECTION METHOD | AREA CLASSIFICATION |
|---|---|---|---|
| **FM** | RX5-5X0A-110 | Intrinsically Safe | Class I, Div. 1; Groups A, B, C, & D<br>Class II, Div. 1; Groups E, F, & G<br>Class III, NEMA 4X, T4@80C<br>Entity |
| | RX5-5X0A-310 | Explosion Proof | Class I, Div. 1; Groups B, C & D<br>Class II, Div. 1; Groups E, F, & G<br>Class III, NEMA 4X, T5@80C |
| | RX5-5X0A-X10 | Non-Incendive ① | Class I, Div. 2; Groups A, B, C, & D<br>Class II, Div. 2; Groups F & G<br>Class III, NEMA 4X |
| **CSA** | RX5-5X0A-110 | Intrinsically Safe | Class I, Div. 1; Groups A, B, C, & D<br>Class II, Div. 1; Groups E, F & G<br>Class III, Type 4X, T4@80C<br>Entity |
| | RX5-5X0A-310 | Explosion Proof | Class I, Div. 1; Groups B, C & D<br>Class II, Div. 1; Groups E, F, & G<br>Class III, Type 4X, T5@80C |
| | RX5-5X0A-X10 | Non-Incendive ① | Class I, Div. 2; Groups A, B, C, & D<br>Class II, Div. 2; Groups E, F, & G<br>Class III, Type 4X, T4@80C |
| **ATEX** | R05-5X0A-110 | Intrinsically Safe | EEx ia IIC T4 (pending) |
| | R05-5X0A-310 | Explosion Proof | EEx d (ia) IIC T4 |
| | R05-5X0A-110 | Non-Incendive ① | EEx n IIC T6 |

① Installations with flammable media inside vessel must be installed per CL I, Div 1 (Ex d or ia).

These units have been tested to EN 61000-6-2 and EN 61000-6-4 and are in compliance with the EMC Directive 89/336/EEC.

### COMMUNICATIONS APPROVALS

| Region | Agency | Frequency |
|---|---|---|
| US | FCC | 6.3 Ghz |
| Canada | IC | 6.3 Ghz |
| Europe (Germany) | RTTE | 5.8 Ghz |

## 3.4.1 Agency Drawing and Entity Parameters

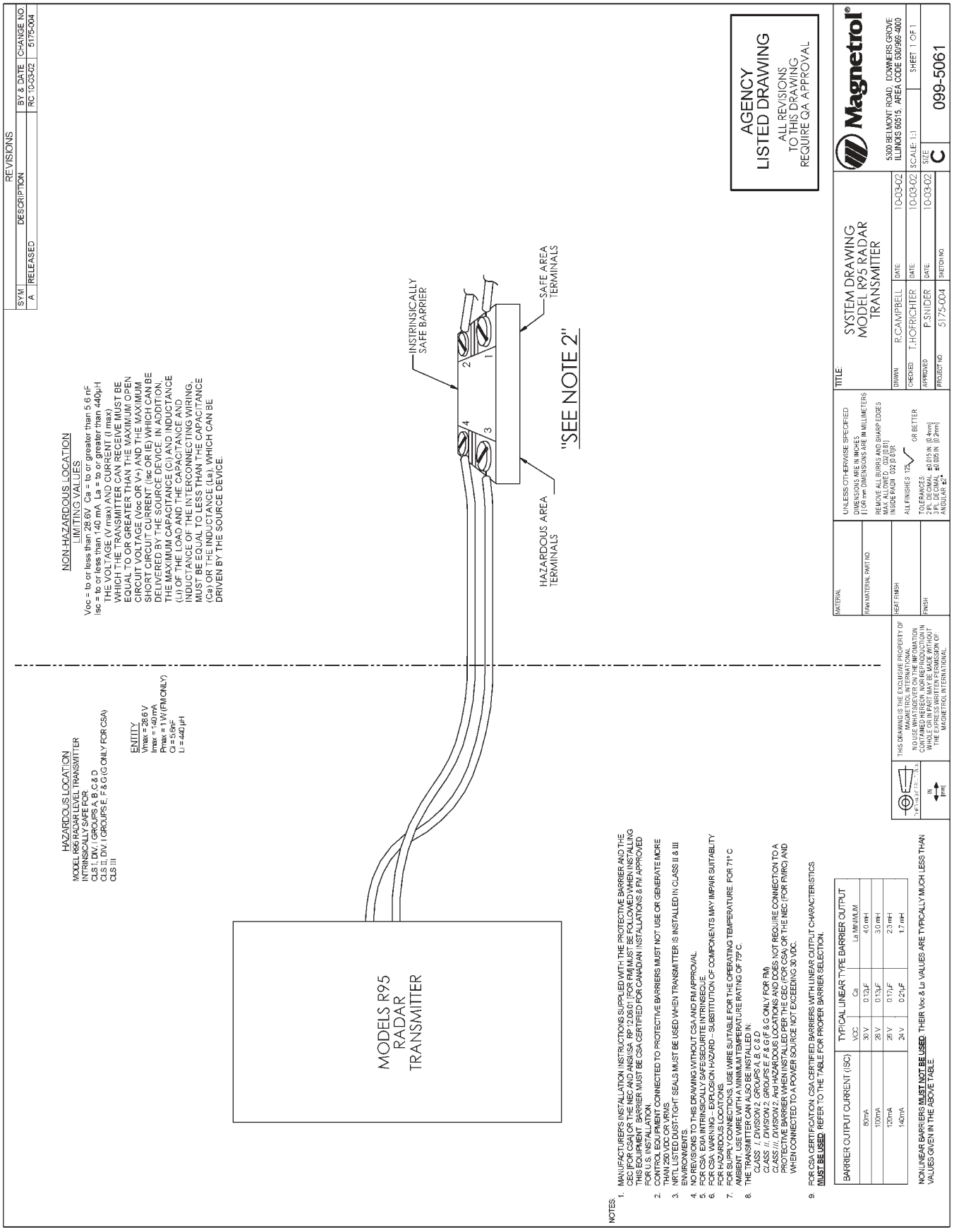

## 3.5 Parts

### 3.5.1 Replacement Parts

| Item | Description | | Part Number | |
|---|---|---|---|---|
| ① | Electronic Module | 6.3 GHz | 031-2827-001 | w/HART |
| | | | -002 | w/o HART |
| | | 5.8 GHz | 031-2828-001 | w/HART |
| | | | -002 | w/o HART |
| ② | Terminal Board | General Purpose<br>Intrinsically Safe<br>Explosion Proof | 030-9127-001 | |
| ③ | O-ring neoprene | | 012-2201-237 | |
| ④ | Housing cover without glass | | 004-9193-002 | |
| ⑤ | Housing cover with glass | GP/IS<br>XP | 036-4410-001<br>-005 | |

### 3.5.2 Recommended Spare Parts

| Description | | Part Number | |
|---|---|---|---|
| Electronic Module | 6.3 GHz | 031-2827-001 | w/HART |
| | | -002 | w/o HART |
| | 5.8 GHz | 031-2828-001 | w/HART |
| | | -002 | w/o HART |

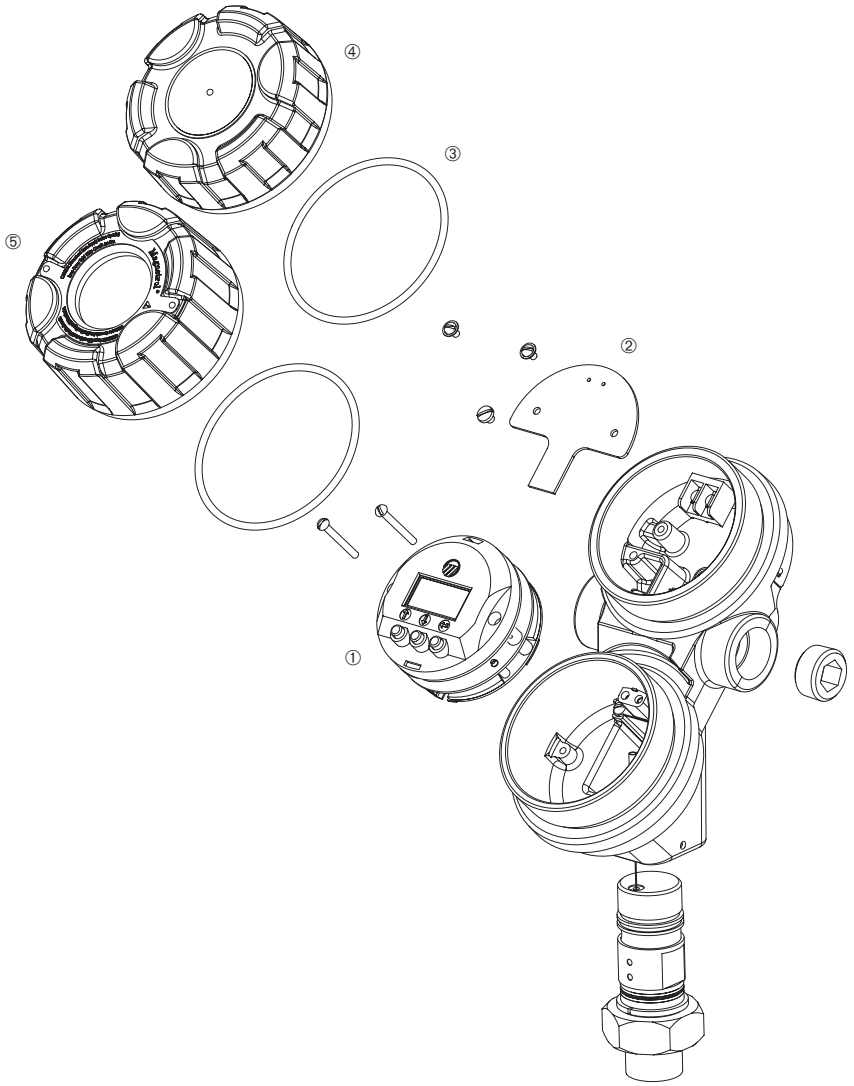

## 3.6 Specifications

### 3.6.1 Functional - Transmitter

| | | |
|---|---|---|
| **System Design** | | |
| Measurement Principle | Pulse burst radar @ 5.8 GHz (Europe), 6.3 GHz (U.S.) | |
| **Input** | | |
| Measured Variable | Level, determined by the time-of-flight of a radar pulse from transmitter to product surface and back | |
| Span | 0.5 to 65 feet (0.2 m to 20 m) | |
| **Output** | | |
| Type | Analog | 4 to 20 mA with optional HART digital signal |
| Range | Analog | 3.8 to 20.5 mA useable |
| | Digital | 0 to 999" (0 to 9999 cm) |
| Resolution | Analog | 0.01 mA |
| | Digital | 0.1" |
| Loop Resistance | GP/IS/XP - 400 Ω @ 24 VDC/20 mA, 350 Ω @ 24 VDC/22 mA | |
| Diagnostic Alarm | Adjustable 3.6 mA, 22 mA, HOLD | |
| Damping | Adjustable 0-45 | |
| **User Interface** | | |
| Keypad | 3-button menu-driven data entry and system security | |
| Indication | 2-line × 8-character display | |
| Digital Communication ① | HART Version 5 compatible | |
| **Power (**Measured at instrument terminals) | | |
| General Purpose | 16 to 36 VDC | |
| Intrinsically Safe | 16 to 28.6 VDC | |
| Explosion Proof | 16 to 36 VDC | |
| **Housing** | | |
| Material | Aluminum A356T6 (<0.25% copper), 316 SS (optional) | |
| Cable Entry | ¾" NPT, M20 | |

① HART communicator Magnetrol P/N 89-5213-XXX sold separately.

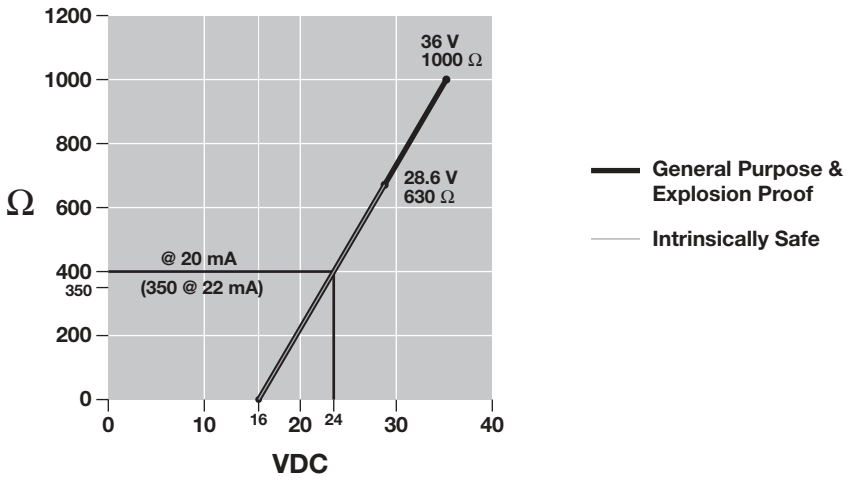

| Environment | | |
|---|---|---|
| Operating Temperature | -40 to +175° F | (-40 to +80° C) |
| LCD Operating Temperature Range | -5 to +160° F | (-20 to +70° C) |
| Storage Temperature | -50 to +175° F | (-46 to +80° C) |
| Humidity | 0-99%, non-condensing | |
| Electromagnetic Compatibility | Meets CE Requirements: EN 50081-2, EN 50082-2 | |
| Shock Class | ANSI/ISA-S71.03 Class SA1 | |
| Vibration Class | ANSI/ISA-S71.03 Class VC2 | |

### 3.6.2 Performance

| | |
|---|---|
| Reference Conditions | Reflection from ideal reflector at +70° F (+20° C) |
| Linearity | ±0.4 inch (10 mm) or 0.1% of tank height (whichever is greater) |
| Measured Error | ±0.4 inch (10 mm) or 0.1% of tank height (whichever is greater) |
| Resolution | 0.1 inch |
| Repeatability | < 0.2 inch or 0.1% of tank height |
| Response Time | < 1 second |
| Warm-up Time | 30 seconds |
| Operating Temp. Range | -40° to +175° F (-40° to +80° C) |
| LCD Temp. Range | -5° to +160° F (-20° to +70° C) |
| Ambient Temp. Effect | 0.05% per 10° C |
| Process Dielectric Effect | < 0.3 inch within selected range |
| Humidity | 0-99%, non-condensing |
| Electromagnetic Compatibility | Meets CE requirements (EN 61000-6-2, EN 61000-6-4) |
| Maximum Rate of Change | 180" (450 cm)/minute |

### 3.6.3 Functional – Dielectric Rod / Horn

| Model | Dielectric Rod TFE | Dielectric Rod Polypropylene | 4" Horn | 6" Horn |
|---|---|---|---|---|
| **Materials** | 316 SS (Hastelloy C, Monel and Kynar opt.), TFE, Viton O-rings ① | 316 SS (Hastelloy C, Monel and Kynar opt.), polypropylene, Viton O-rings ① | 316 SS (Hastelloy C and Monel opt.), TFE, Viton O-rings | 316 SS (Hastelloy C and Monel opt.), TFE, Viton O-rings |
| **Process Connection** | 1½" NPT and BSP, ANSI or DIN flanges | 1½" NPT and BSP, ANSI or DIN flanges | 4" and 6" ANSI or DIN flanges | 6" ANSI or DIN flanges |
| **Maximum Process Temperature** | +400° F @ 50 psig (+204° C @ 3.5 bar) | +200° F @ 50 psig (+93° C @ 3.5 bar) | +400° F @ 50 psig (+204° C @ 3.5 bar) | +400° F @ 50 psig (+204° C @ 3.5 bar) |
| **Maximum Process Pressure** | 750 psig @ +70° F (51.7 bar @ +20° C) | 750 psig @ +70° F (51.7 bar @ 20° C) | 750 psig @ +70° F (51.7 bar @ 20° C) | 750 psig @ +70° F (51.7 bar @ 20° C) |
| **Minimum Dielectric (application dependent)** | 2.0 | 2.0 | 1.7 | 1.7 |

① Kynar mounting nut has maximum service temperature of +270° F @ 50 psig (+132° C @ 3.5 bar). It should only be used in non-metallic process fittings.

### 3.6.4 Pulsar Antenna Pressure-Temperature Ratings

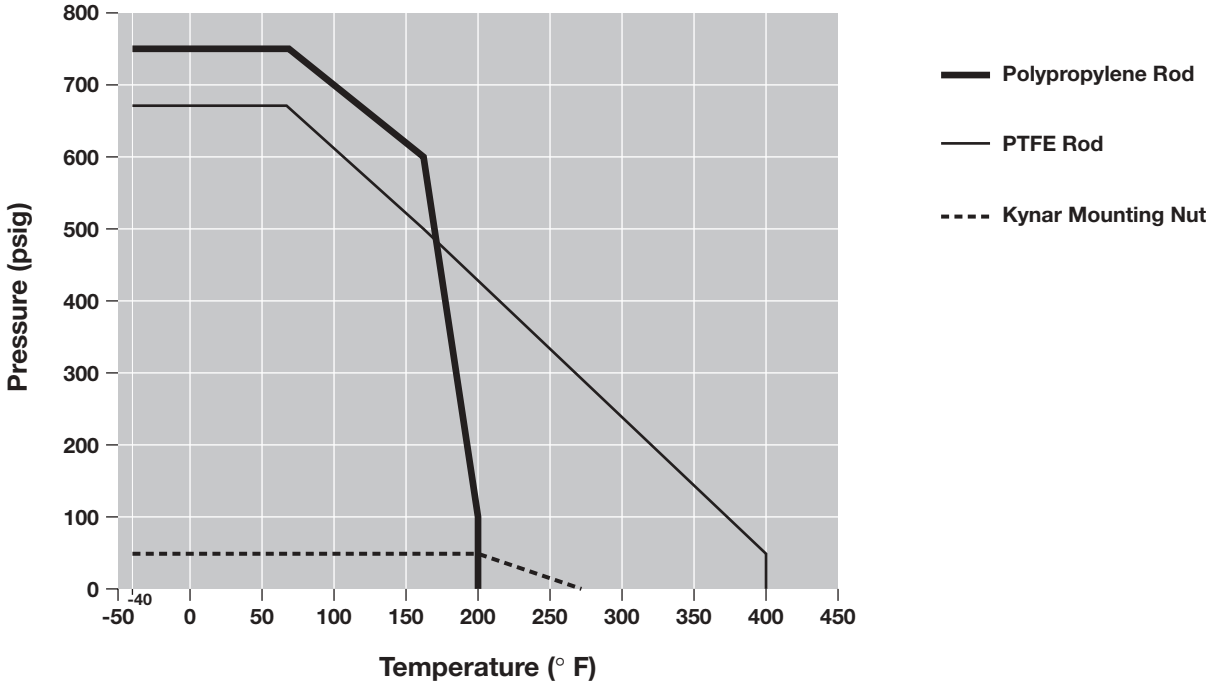

## 3.6.5 Physical - Inches (mm)

### Transmitter

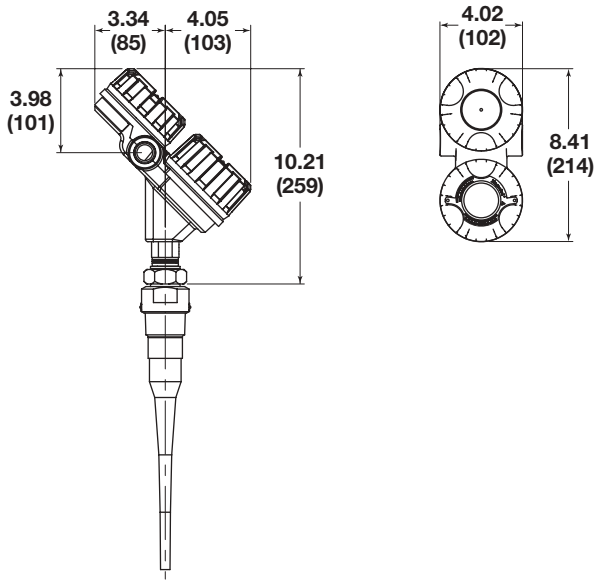


### Dielectric Rod

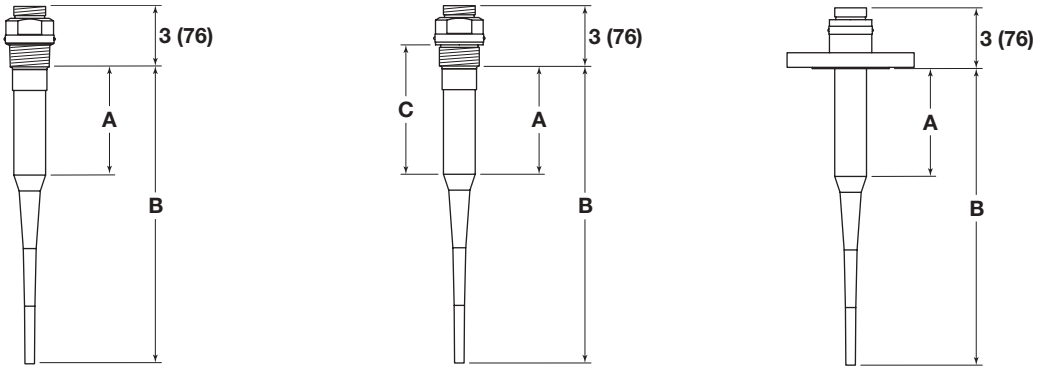


NPT

BSP

ANSI and DIN Flanges

### Horn

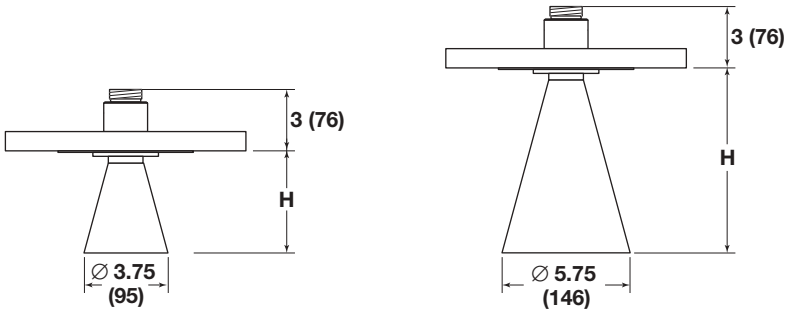


4" Horn

6" Horn

| Model # | Antenna Extension | DIELECTRIC RODS | | | HORNS | |
|---|---|---|---|---|---|---|
| | | All | All | BSP | 4" | 6" |
| 8th Digit | | Dim A | Dim B | Dim C | Dim H | Dim H |
| 0 | ≤ 1" (25 mm) Nozzle | 2.3 (5.8) | 11.1 (282) | 3 (76) | ↓ | ↓ |
| 1 | ≤ 4" (100 mm) Nozzle | 5.1 (130) | 14 (356) | 5.9 (150) | 4.6 (117) | |
| 2 | ≤ 8" (200 mm) Nozzle | 9.1 (231) | 18 (457) | 9.9 (251) | 8.4 (213) | 8.3 (211) |
| 3 | ≤ 12" (300 mm) Nozzle | 13.1 (333) | 22 (559) | 13.9 (353) | 12.4 (315) | 12.4 (315) |

## 3.7 Model Numbers

### 3.7.1 Pulsar Radar Transmitter

**BASIC MODEL NUMBER AND OPERATING FREQUENCY**

| | |
|---|---|
| R95 | Through-Air Radar Level Transmitter- 6.3 GHz Pulse Radar (North America) |
| R05 | Through-Air Radar Level Transmitter- 5.8 GHz Pulse Radar (Europe) |

**POWER**

| | |
|---|---|
| 5 | 24 VDC, Two-wire |

**SIGNAL OUTPUT**

| | |
|---|---|
| 0 | 4-20 mA only, without HART |
| 1 | 4-20 mA with HART (HART communicator 89-5213-xxx available separately) |

**ACCESSORIES**

| | |
|---|---|
| A | Digital Display and Keypad |

**MOUNTING/CLASSIFICATION**

| | |
|---|---|
| 1 | Integral, General Purpose & Intrinsically Safe (FM & CSA), Non-incendive (CL1, Div II) ① |
| 3 | Integral, Explosion-Proof (FM & CSA Class I Div. 1, Groups B, C & D) |
| A | Integral, General Purpose & Intrinsically Safe (ATEX II 1/2G EEx ia IIC T6) |
| C | Integral, Explosion-Proof (ATEX II 1/2G EEx d ia IIB T6) |
| E | Integral, Non-Incendive (ATEX II 3G EEx n II T6) ① |

① Installations with flammable media inside vessel must be installed per CL I, Div 1 (Ex d or ia).

**HOUSING/CONDUIT CONNECTION**

| | |
|---|---|
| 1 | Cast Aluminum, Dual Compartment, 45° / ¾" NPT |
| 2 | Cast Aluminum, Dual Compartment, 45° / M20 |
| 3 | Cast 316 SS, Dual Compartment, 45° / ¾" NPT |
| 4 | Cast 316 SS, Dual Compartment, 45° / M20 |

| | | | | | | | | | | | |
|---|---|---|---|---|---|---|---|---|---|---|---|
| R | | 5 | — | 5 | | 0 | A | — | | | 0 |

## 3.7.2 Radar Antennas - Dielectric Rod

**TECHNOLOGY**

| | |
|---|---|
| R | RADAR Antennas |

**OPERATING FREQUENCY**

| | |
|---|---|
| A | 5.8/6.3 GHz |

**CONFIGURATION/STYLE**

| | |
|---|---|
| A | Dielectric Rod – TFE |
| B | Dielectric Rod – Polypropylene |

**MATERIAL OF CONSTRUCTION**

| | |
|---|---|
| A | 316 SS/316L SS |
| B | Hastelloy C |
| C | Monel |
| 3 | Kynar (For use in non-metallic process fittings only; ANTENNA EXTENSION Code 0 only) |

**PROCESS CONNECTION - SIZE/TYPE***

| |
|---|
| See next page |

**O-RINGS**

| | |
|---|---|
| 0 | Viton GFLT |
| 1 | EPDM |
| 2 | Kalrez 4079 |
| 8 | Aegis PF128 |

**ANTENNA EXTENSION**

| | |
|---|---|
| 0 | For nozzle height ≤ 1" (25 mm) (for threaded process connection only) |
| 1 | For nozzle height ≤ 4" (100 mm) |
| 2 | For nozzle height ≤ 8" (200 mm) |
| 3 | For nozzle height ≤ 12" (300 mm) |

| | | | | | | | | | | | |
|---|---|---|---|---|---|---|---|---|---|---|---|
| R | A | | — | | | | | — | | 0 | 0 |

**PROCESS CONNECTION - SIZE/TYPE ①**

| | | |
|---|---|---|
| 31 | 1½" NPT Thread ② | |
| 32 | 1½" BSP Thread ② | |
| 43 | 2" 150# ANSI Raised Face Flange | |
| 44 | 2" 300# ANSI Raised Face Flange | |
| 45 | 2" 600# ANSI Raised Face Flange | |
| 53 | 3" 150# ANSI Raised Face Flange | |
| 54 | 3" 300# ANSI Raised Face Flange | |
| 55 | 3" 600# ANSI Raised Face Flange | |
| 63 | 4" 150# ANSI Raised Face Flange | |
| 64 | 4" 300# ANSI Raised Face Flange | |
| 65 | 4" 600# ANSI Raised Face Flange | |
| 73 | 6" 150# ANSI Raised Face Flange | |
| 74 | 6" 300# ANSI Raised Face Flange | |
| 75 | 6" 600# ANSI Raised Face Flange | |
| DA | DN 50, PN 16 | DIN 2527 Form B ② |
| DB | DN 50, PN 25/40 | DIN 2527 Form B ② |
| DD | DN 50, PN 64 | DIN 2527 Form E |
| EA | DN 80, PN 16 | DIN 2527 Form B |
| EB | DN 80, PN 25/40 | DIN 2527 Form B |
| ED | DN 80, PN 64 | DIN 2527 Form E |
| FA | DN 100, PN 16 | DIN 2527 Form B |
| FB | DN 100, PN 25/40 | DIN 2527 Form B |
| FD | DN 100, PN 64 | DIN 2527 Form E |
| GA | DN 150, PN 16 | DIN 2527 Form B |
| GB | DN 150, PN 25/40 | DIN 2527 Form B |
| GD | DN 150, PN 64 | DIN 2527 Form E |

① Metal flanges welded to antenna; Plastic flanges and metal flanges with threaded antenna connection ordered separately

② 2" (50 mm) minimum nozzle diameter/Sched 80 pipe classification maximum

| R | A | | — | | | | | — | | 0 | 0 |
|---|---|---|---|---|---|---|---|---|---|---|---|

## 3.7.3 Radar Antennas - Horn

**TECHNOLOGY**

| | |
|---|---|
| R | RADAR Antennas |

**OPERATING FREQUENCY**

| | |
|---|---|
| A | 5.8/6.3 GHz |

**CONFIGURATION/STYLE**

| | |
|---|---|
| 4 | 4" Horn |
| 6 | 6" Horn |

**MATERIAL OF CONSTRUCTION**

| | |
|---|---|
| A | 316 SS/316L SS |
| B | Hastelloy C |
| C | Monel |

**PROCESS CONNECTION - SIZE/TYPE***

| | | |
|---|---|---|
| 63 | 4" 150# ANSI Raised Face Flange | |
| 64 | 4" 300# ANSI Raised Face Flange | |
| 65 | 4" 600# ANSI Raised Face Flange | |
| 73 | 6" 150# ANSI Raised Face Flange | |
| 74 | 6" 300# ANSI Raised Face Flange | |
| 75 | 6" 600# ANSI Raised Face Flange | |
| FA | DN 100, PN 16 | DIN 2527 Form B |
| FB | DN 100, PN 25/40 | DIN 2527 Form B |
| FD | DN 100, PN 64 | DIN 2527 Form E |
| GA | DN 150, PN 16 | DIN 2527 Form B |
| GB | DN 150, PN 25/40 | DIN 2527 Form B |
| GD | DN 150, PN 64 | DIN 2527 Form E |

* Metal flanges welded to antenna; Plastic flanges and metal flanges with threaded antenna connection ordered separately

**O-RINGS**

| | |
|---|---|
| 0 | Viton GFLT |
| 1 | EPDM |
| 2 | Kalrez 4079 |
| 8 | Aegis PF128 |

**ANTENNA EXTENSION**

| | |
|---|---|
| 1 | For nozzle height ≤ 4" (100 mm) - Configuration Style code 4 only |
| 2 | For nozzle height ≤ 8" (200 mm) |
| 3 | For nozzle height ≤ 12" (300 mm) |

| | | | | | | | | | | | |
|---|---|---|---|---|---|---|---|---|---|---|---|
| R | A | | — | | | | | — | | 0 | 0 |

## Glossary

**Accuracy** The closeness of agreement between the result of measurement and the true value of the measure (inaccuracy equals the maximum positive and negative % deviation over the total span).

**ANSI** American National Standards Institute.

**Antenna** A mechanical component that serves as an impedance match between the transmission of a signal in a cable (or waveguide) and air.

**AntnaMnt** *Antenna Mount* The type of process mounting (NPT, BSP or Flange) utilized in the installation. This aids in establishing an exact Sensor Reference Point for Radar propagation and measurement.

**AntnaTyp** *Antenna Type* A particular antenna configuration or design. Each antenna design has a set of unique performance characteristics.

**ATEX** *ATmosphere EXplosive* European regulations governing the use in hazardous areas.

**BlockDist** *Blocking Distance* The area near the antenna where reflections cannot be measured effectively due to antenna ringing and noise.

**CE** *Conformité Européene* Standards and performance criteria for the new European Union.

**CENELEC** *Comité Européen de Normalisation Electrotechnique* European organization that sets standards for electrical equipment.

**CSA** *Canadian Standards Association* Canadian, third party agency that qualifies the safety of electrical equipment.

**Damping** Factor applied to smooth output variations due to turbulence.

**Default Screen** The main position of the menu structure that displays the primary measurement values of LEVEL, Quality, % OUTPUT, and LOOP. The transmitter returns to this position after 5 minutes of inactivity (except Screens 2-6).

**Diagnostics** Three levels of error messages; Fault, Warning and Information.

**Dielectric Constant** ($\varepsilon$) The electrical permittivity of a material. The units are farad/meter.

**Dielectric Rod antenna** A non-metallic (TFE and polypropylene typical) transition between the microwave waveguide and air.

**Distance** The present reading measured from the transmitter's Sensor Reference Point to the material in a vessel; compliment of Level.

**DVM/DMM** Digital Volt Meter/Digital Multimeter.

**Electromagnetic Energy** The radiation that travels through space as electric and magnetic fields varying with position and time. Examples in increasing frequency: radio waves, microwave, infrared light, visible light, ultraviolet light, x-rays, gamma waves, and cosmic waves.

**EM** See Electromagnetic Energy.

**EMI** *Electromagnetic Interference* Electrical noise caused by electromagnetic fields that may affect electrical circuits, particularly low-power electronic devices.

**EN** *European Normal* Committee guidelines in EC countries that take precedence over local, country guidelines.

**ENV** Preliminary EN guidelines, or pre-standards.

**Ergonomic** A mechanism that considers human capability in its design or function.

**ETS** *Equivalent Time Sampling* Process that captures high speed electromagnetic events in real time (nanoseconds) and reconstructs them into an equivalent time (milliseconds).

**Explosion Proof Enclosure** An enclosure designed to withstand an explosion of gas or vapor within it and prevent the explosion from spreading outside the enclosure.

**Factory Sealed** A third-party-approved Explosion Proof seal installed in the unit during manufacturing. This alleviates the end user from installing an external XP seal adjacent (within 18") to the device.

**Fault** The highest level in the hierarchy of diagnostics annunciating a defect or failure in circuitry or software that preclude reliable measurement. The current (mA) value unit defaults to 3.6, 22, or Hold and a message is displayed on the rotating screen. Further information can be obtained by viewing the Status or Diagnostic (Factory Menu) screens.

**Feedthrough** A small, connecting cavity between the main housing compartments, carrying the cable that supplies the operating energy to the measurement circuitry and returns the output value proportional to level. This cavity is potted to maintain the environmental isolation between the two compartments.

**Fiducial** A reference signal (baseline) to which all measurements are referenced.

**FM** *Factory Mutual* American, third party agency that qualifies the safety of electrical equipment.

**Foam** The entraining of air in a liquid. The effect of foam on radar measurement is based on four factors; 1.) dielectric of the liquid from which the foam has developed, 2.) density of the foam (bubble size), 3.) amount of foam above the liquid and, to a lesser extent, 4.) wall thickness of the bubbles.

**Four Wire** An electronic instrument design that uses one set of wires to supply power (120/240 VAC, 24 VDC) and another set to carry the process measurement signal (4-20 mA). Also called Line Powered.

**FSK** *Frequency Shift Keying* See HART.

**Gain** Amplification adjustment to attain optimum performance in various product dielectric ranges. (Factory setting).

**Ground** An electrical connection to the Earth's potential that is used as a reference for the system and electrical safety.

**Grounded** A state where no electrical potential exists between the ground (green) connection on the transmitter and the Earth or system ground.

**Guided Wave Radar** See TDR.

**HART** *Highway Addressable Remote Transducer* Protocol that uses the Bell 202 frequency shift keying (FSK) method to superimpose low level frequencies (1200/2000 Hz) on top of the standard 4-20 mA loop to provide digital communication.

**HART ID** See Poll Address.

**Hazardous Area** An area where flammable gases or vapors are or may be present in the air in quantities sufficient to produce explosive or ignitable mixtures.

**Horn Antenna** A metallic, cone transition between the microwave waveguide and air.

**IEC** *International Electrotechnical Commission* Organization that sets international standards for electrical devices.

**Increased Safety** Designs and procedures that minimize sparks, arcs, and excessive temperatures in hazardous areas. Defined by the IEC as Zone 1 environments (Ex e).

**Information (message)** The lowest level in the hierarchy of diagnostic conditions providing operational factors that are not critical to measurement. Further information can be obtained by viewing the Status or Diagnostic (Factory Menu) screens.

**Intrinsically Safe Ground** A very low resistance connectin to a ground, in accordance with the National Electrical Code (NEC, ANSI/NFPA 70 for FMRC), the Canadian Electrical Code (CEC for CSA), or the local inspector.

**Intrinsic Safety** A design or installation approach that limits the amount of energy that enters a hazardous area to eliminate the potential of creating an ignition source.

**Level** The present reading of the height of material in a vessel; compliment of Distance.

**LevlOfst** *Level Offset* The distance above the tank bottom where radar level measurement is impossible due to heating coils, baffles, angled or curved tank bottoms, etc. The mA output will never read lower than the Level Offset value.

**Linearity** The worst case error calculated as a deviation from a perfect straight line drawn between two calibration points.

**Line Powered** See Four Wire.

**LOE** *Loss of Echo* Condition where a level measurement is impossible due to the absence of valid reflections from the liquid surface.

**LOE Delay** *Loss of Echo Delay* The amount of time the transmitter spends looking for a valid Level signal before going into Loss of Echo Fault The last valid Level reading is held during this search.

**LOE Fault** *Loss of Echo Fault* The mA value to which the output is driven after the Loss of Echo Delay times out; choices are 3.6mA, 22mA and HOLD.

**Loop** The present reading of the 4-20 mA current output.

**Loop Powered** See Two Wire.

**Loop Tst** *Loop Test* Built-in system capability to test/calibrate a loop (or separate loop device) by driving the transmitter output to a particular value.

**Low Voltage Directive** A European Community requirement for electrical safety and related issues of devices using 50-1000 VDC or 75-1500 VAC.

**Measured Value** The typical level measurement values used to track the level of a process: Level, % Output, and Loop.

**Media** The liquid material being measured by the level transmitter.

**Multidrop** The ability to install, wire, or communicate with multiple devices over one cable. Each device is given a unique address and ID.

**Non-hazardous Area** An area where no volatile mixtures of vapors/gas and oxygen will be found at any time. Also called General Purpose Area.

**Non-Incendive** A circuit in which any arc or thermal effect produced, under intended operating conditions of the equipment or due to opening, shorting, or grounding of field wiring, is incapable, under specific test conditions, of igniting the flammable gas, vapor, or dust-air mixture.

**Password** A numerical value between 0 and 255 that protects stored configuration data from unauthorized manipulation.

**Percent (%) Output** The present reading as a fraction of the 16 mA scale (4-20 mA).

**Poll Address (HART ID)** A number between 1 and 15 which sets an address or location of a device in a multi-drop loop. Poll address for single device configuration is 0.

**Qual** *Quality* A relative value (0-99) that shows the strength and usefulness for a given reflected signal.

**QuickStart** The essential information needed for the Pulsar radar transmitter and antenna to be installed, wired, and calibrated.

**Radar (Radio Detection And Ranging)** Uses EM energy and high speed timing circuits to determine distance. Original Radar devices used energy in the radio frequency range (MHz), many current devices use much higher frequencies (GHz).

**Range** The distance over which the transmitter scans for valid return signals.

**RateChng** *Rate of Change* The maximum velocity of vertical movement of a liquid's surface.

**Relative Dielectric** ($\varepsilon_r$) A unitless number that indicates the relative permittivity of a material.

**Repeatability** The maximum error between two or more output readings of the same process condition.

**RFI** *Radio Frequency Interference* Electrical noise that can have an adverse affect on electrical circuits, particularly low-power devices.

**Safety Zone** A user-defined area just below the Blocking Distance where level measurement still has a high degree of reliability. Radar can develop ambiguous readings when the level reaches the region of the antenna. An alarm can be annunciated in this area for critical applications where reliable measurement is a necessity for safety reasons.

**Safety Zone Height** The height of the region below the Blocking Distance where an alarm will be annunciated upon detection of liquid.

**Safety Zone Fault** An optional condition added, when necessary, to ensure safe, reliable high-level readings in critical applications. Choices are 3.6 mA, 22 mA, Latch 3.6 or Latch 22. If Latch 3.6 or Latch 22 are chosen, the loop current will remain in alarm until it is cleared in SZ Latch menu screen.

**Safety Zone Alarm Reset** Use screen for clearing a Latched Alarm set in **Safety Zone Fault** (above)

**SnsrOfst** *Sensor Offset* The distance (+ or -) between the customer's 100% reference point (tank top) and the Sensor reference point (bottom of NPT thread, top of BSP thread or face of flange).

**Span** The difference between the upper and lower limits of the range.

**Specific Gravity (SG)** The ratio of the density of a material to the density of water at the same conditions.

**Sensitivity** The amount of amplification applied to the Level signal; a higher value aids in measuring low dielectric media; a lower number assists in ignoring nearby objects.

**Status** The current state of the transmitter's diagnostics; screen updates every 10 seconds.

**Targets** Objects in the vessel that create reflections of the radar signal (microwave energy).

**Targ Rej** *Target Rejection* The ability to ignore reflections from objects in the vessel that are not the liquid level, i.e., false targets (e.g. pipes, ladders, baffles).

**Tank Ht** *Tank Height* The tank measurement between the 0% (tank bottom) and 100% (tank top).

**Tank Top** The 100% point in a vessel. Also considered for the type of tank top; e.g. flat, dome, etc., which affects the development of multiple echoes during high level conditions. Multiple echoes can appear as an invalid Level signal.

**TDR (Time Domain Reflectometry)** Uses a waveguide to carry EM energy to and from the surface of the media to measure distance; similar to conventional through-air Radar but much more efficient. Also called Guided Wave Radar.

**Trim 4/Trim 20** Built-in system capability to fine tune the 4 mA and 20 mA points so the transmitter output corresponds exactly to user's meter, DCS input, etc.

**Trim Lvl** *Trim Level* An offset parameter used to account for various deviations in measurement. It is an offset value that can force the transmitter to read the exact level reading.

**Turbulnc** *Turbulence* Agitation, or disturbance, of the liquid level surface; greater the agitation, greater the scattering of the radar signal (microwave energy).

**Two Wire** An electrical instrument design that uses one set of wires to provide both the supply power and process measurement signal. The process measurement is achieved by varying the current of the loop. Also called Loop Powered.

**Units** The engineering units used to measure level in the system. The choices are in (inches) and cm (centimeters).

**Warning (message)** The second level in the hierarchy of Diagnostics annunciating conditions that are not fatal but may affect measurement. A message will occur on the main (rotating) screen when a Warning is detected but will not affect output current. Further information can be obtained by viewing the Status or Diagnostic screens.

# RX5 Radar Transmitter

## Configuration Data Sheet

Copy blank page and store calibration data for future reference and troubleshooting.

| Item | Value | Value | Item (factory defaults) | Value | Value |
|---|---|---|---|---|---|
| Vessel Name | | | Display Factory | | |
| Vessel # | | | Diagnostics | | |
| Media & Dielectric | | | Launcher | | |
| Tag # | | | Factory Cal | | |
| Electronics Serial # | | | Peaks #0 | | |
| Antenna Serial # | | | #1 | | |
| Level | | | #2 | | |
| Units | | | #3 | | |
| Antenna Type | | | #4 | | |
| Antenna Extension | | | Algorithm | | |
| Antenna Mounting | | | Range | | |
| Sensor Offset | | | TVG Type | | |
| Tank Top | | | TVG Maximum | | |
| Tank Height | | | Fiducial Position | | |
| Blocking Distance | | | Fiducial Gain | | |
| Level Offset | | | System Gain | | |
| Dielectric | | | Conversion Factor | | |
| Turbulence | | | Cef dm/s | | |
| Rate of Change | | | Scale Offset | | |
| Amount of Foam | | | Distance Correction | | |
| Targets #1 | Q____ - _____ | | Echo Amplitude | | |
| #2 | Q____ - _____ | | # Run Average | | |
| #3 | Q____ - _____ | | Adaptive Filter | | |
| #4 | Q____ - _____ | | #Adap Average | | |
| #5 | Q____ - _____ | | Scatter High | | |
| Target Rejection | | | Rate High | | |
| 4 mA point | | | Scat Rate | | |
| 20 mA point | | | Peak Detect Threshold | | |
| Damping Factor | | | Peak Detect Reference | | |
| Sys Fault | | | Minimum Threshold | | |
| LOE Fault | | | ROC/min | | |
| LOE Delay | | | Maximum Rate | | |
| SZ Fault | | | Maximum dD | | |
| SZ Height | | | Safety Zone Hysteresis | | |
| SZ Alarm Reset | | | Data Log | | |
| HART Poll Address | | | **Name** | | |
| Trim 4 mA | | | **Date** | | |
| Trim 20 mA | | | **Time** | | |
| Trim Level | | | **NOTES:** | | |
| Loop Test | | | | | |
| New Password | | | | | |
| Status | | | | | |
| Language | | | | | |
| Model RX5 VerX.XXX | | | | | |

# Notes

## Service Policy

Owners of Magnetrol/STI controls may request the return of a control or any part of a control for complete rebuilding or replacement. They will be rebuilt or replaced promptly. Controls returned under our service policy must be returned by Prepaid transportation. Magnetrol/STI will repair or replace the control at no cost to the purchaser (or owner) other than transportation if:

1. Returned within the warranty period; and
2. The factory inspection finds the cause of the claim to be covered under the warranty.

If the trouble is the result of conditions beyond our control; or, is NOT covered by the warranty, there will be charges for labor and the parts required to rebuild or replace the equipment.

In some cases it may be expedient to ship replacement parts; or, in extreme cases a complete new control, to replace the original equipment before it is returned. If this is desired, notify the factory of both the model and serial numbers of the control to be replaced. In such cases, credit for the materials returned will be determined on the basis of the applicability of our warranty.

No claims for misapplication, labor, direct or consequential damage will be allowed.

## Return Material Procedure

So that we may efficiently process any materials that are returned, it is essential that a "Return Material Authorization" (RMA) number be obtained from the factory, prior to the material's return. This is available through Magnetrol/STI's local representative or by contacting the factory. Please supply the following information:

1. Company Name
2. Description of Material
3. Serial Number
4. Reason for Return
5. Application

Any unit that was used in a process must be properly cleaned in accordance with OSHA standards, before it is returned to the factory.

A Material Safety Data Sheet (MSDS) must accompany material that was used in any media.

All shipments returned to the factory must be by prepaid transportation.

All replacements will be shipped F.O.B. factory.

Magnetrol

5300 Belmont Road • Downers Grove, Illinois 60515-4499 • 630-969-4000 • Fax 630-969-9489 • www.magnetrol.com
145 Jardin Drive, Units 1 & 2 • Concord, Ontario Canada L4K 1X7 • 905-738-9600 • Fax 905-738-1306
Heikensstraat 6 • B 9240 Zele, Belgium • 052 45.11.11 • Fax 052 45.09.93
Regent Business Ctr., Jubilee Rd. • Burgess Hill, Sussex RH15 9TL U.K. • 01444-871313 • Fax 01444-871317

STI

5300 Belmont Road • Downers Grove, Illinois 60515-4499 • 630-969-4028 • Fax 630-969-9489 • www.sticontrols.com

Copyright © 2003 Magnetrol International, Incorporated. All rights reserved. Printed in the USA.
Magnetrol and Magnetrol logotype are registered trademarks of Magnetrol International.
STI and STI logotype are registered trademarks of Magnetrol International.

Performance specifications are effective with date of issue and are subject to change without notice.
The brand and product names contained within this document are trademarks or registered trademarks of their respective holders.

BULLETIN: 58-601.0
EFFECTIVE: April 2003