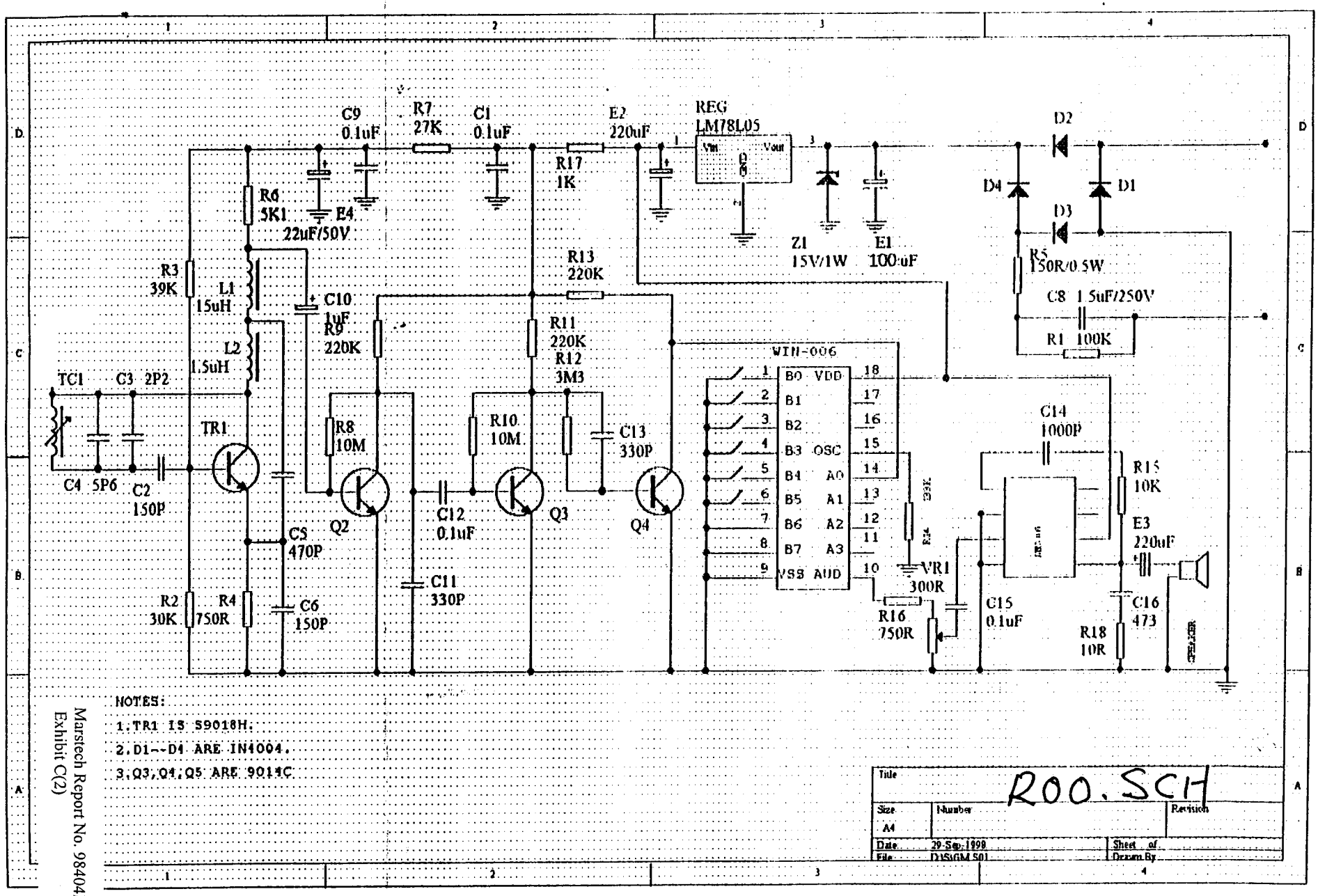


NOTES:

1.TR1 IS S9018H.

2.D1--D4 ARE IN4004.

3.Q3,Q4,Q5 ARE 9014C

| | | |
|---|---|---|
| Title | R00.SCH | |
| Size A4 | Number | Revision |
| Date 29-Sep-1998 | | Sheet of |
| File D:\SGM.SCH | | Drawn By |

Marstech Report No. 98404D/B
Exhibit C(2)