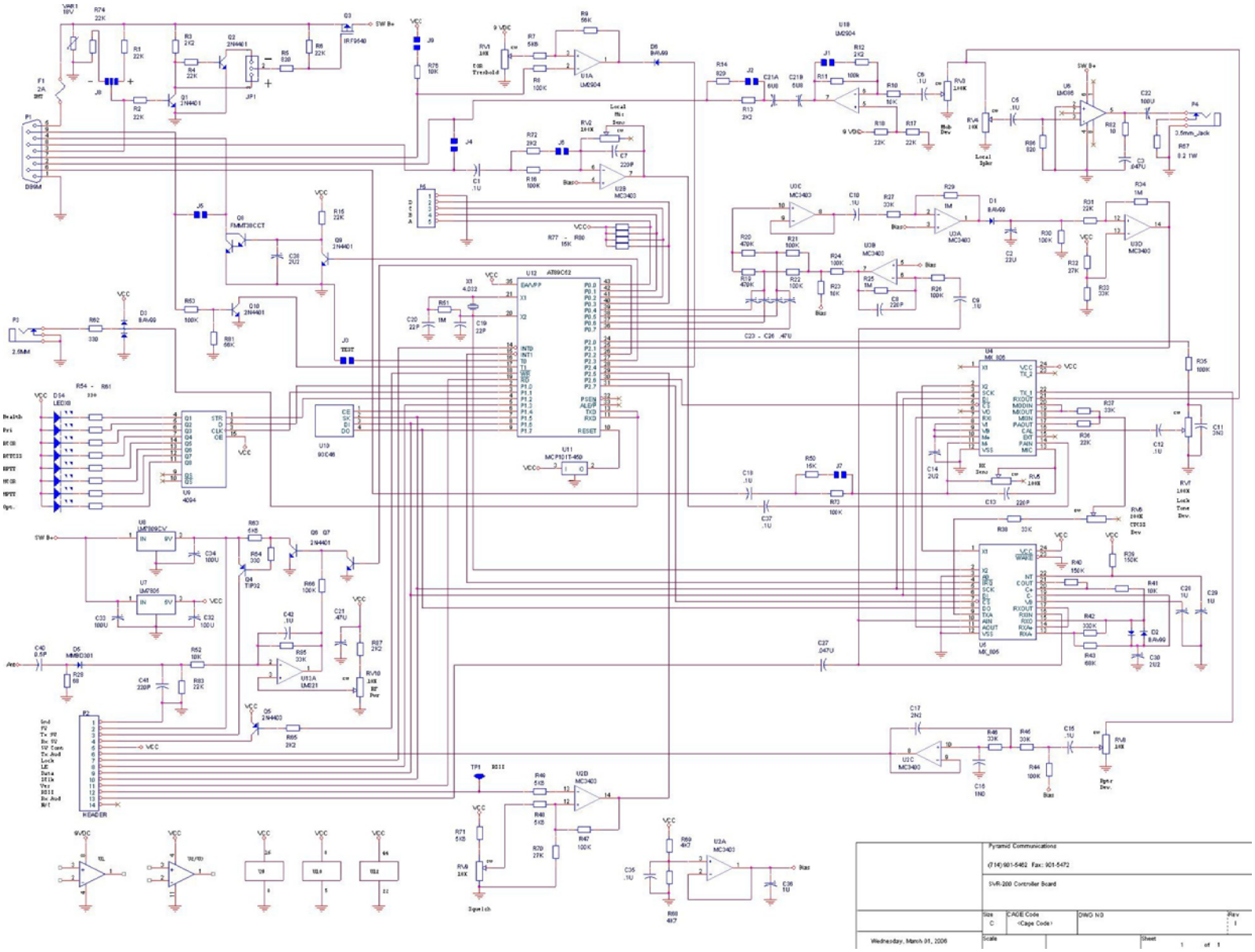

Pyramid Communications

(714) 901-5462 Fax: 901-5472

SVR-200 Controller Board

Size	CAGE Code	DWG NO	Rev
C	<Cage Code>		1

Wednesday, March 01, 2006

Scale

Sheet 1 of 1

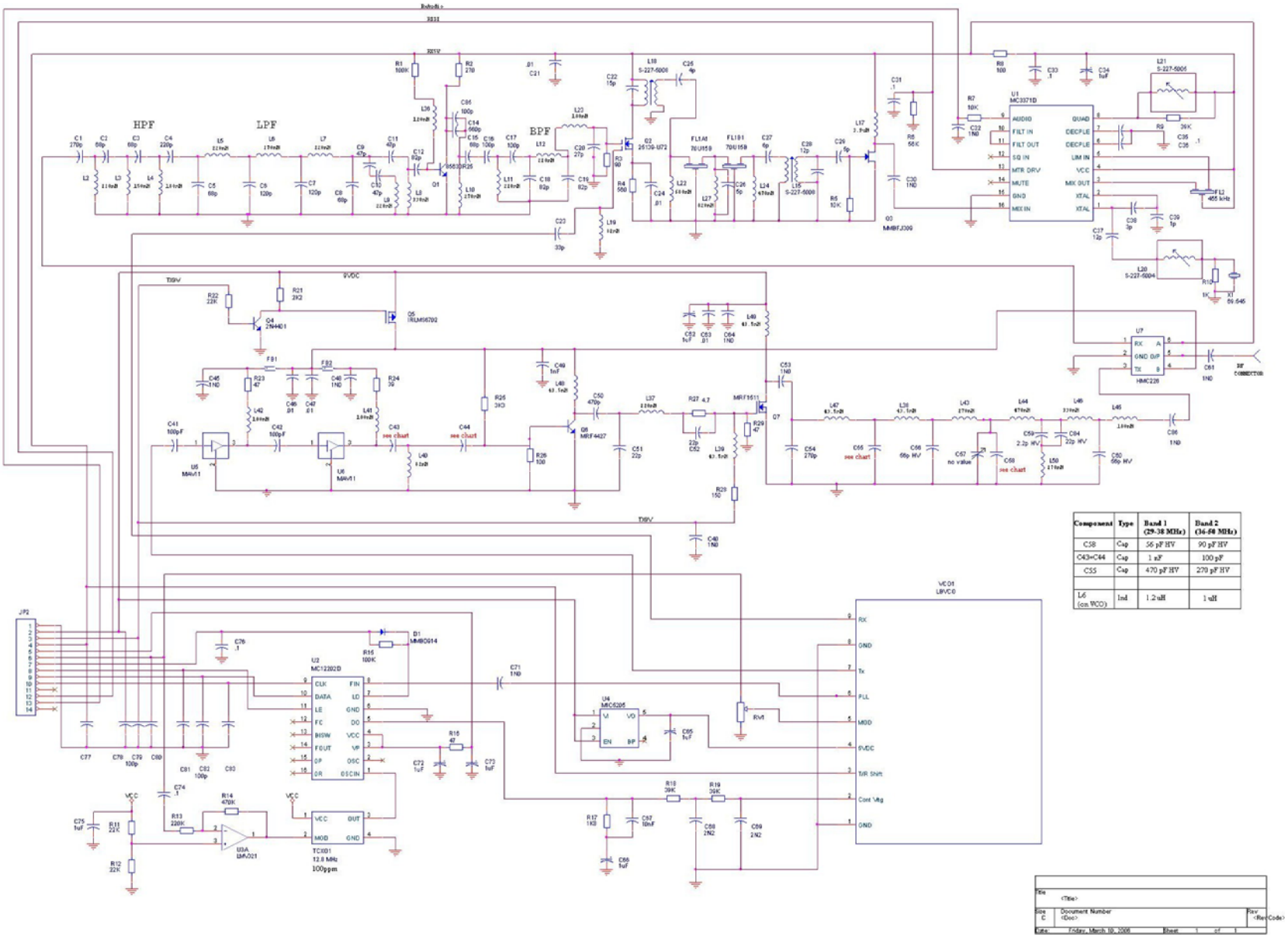

Component	Type	Band 1 (29-38 MHz)	Band 2 (34-60 MHz)
C58	Cap	56 pF HV	90 pF HV
C43=C44	Cap	1 nF	100 pF
C55	Cap	470 pF HV	270 pF HV
L6 (on VCO)	Ind	1.2 uH	1 uH

Title	<Title>		
Size C	Document Number <Doc>		Rev <RevCode>
Date: Friday, March 10, 2006		Sheet 1 of 1	