OPERATION INSTRUCTIONS

Form 4925T, 02-06
Supersedes Form 4925T, 09-03

DSP500 Series Wheel Alignment Sensors

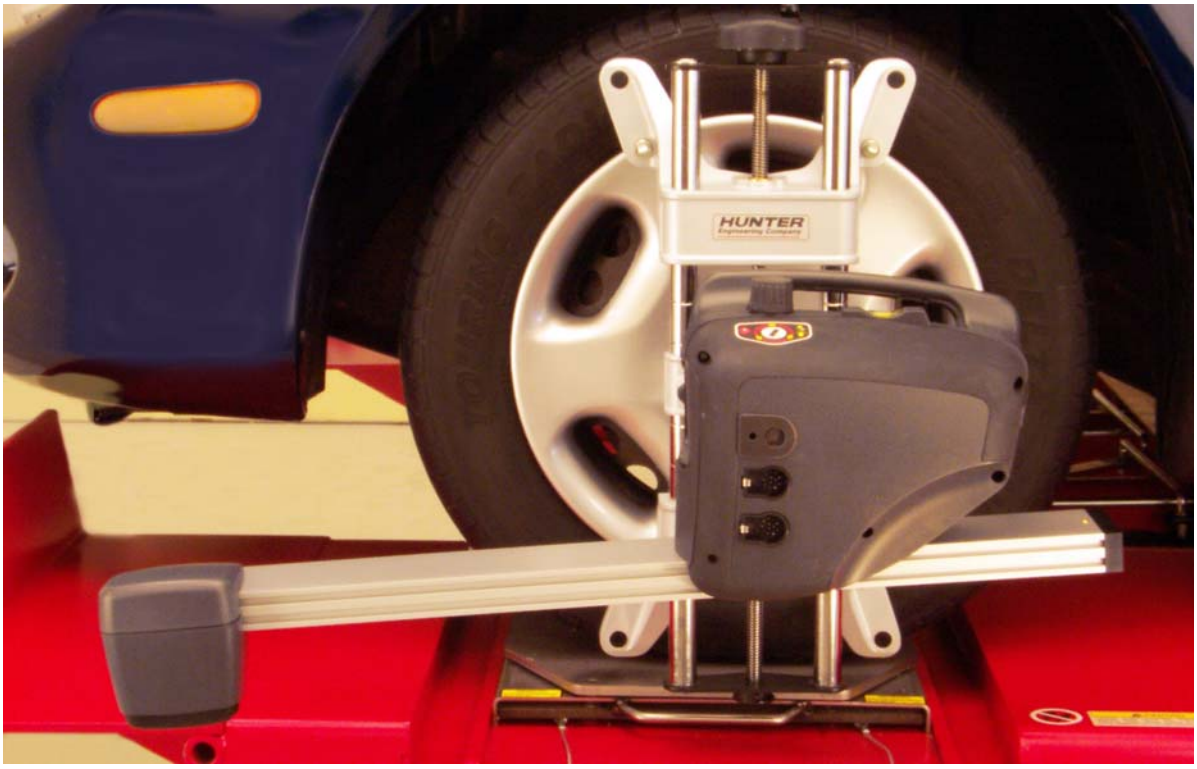

HUNTER Engineering Company

©Copyright 2003 - 2006 Hunter Engineering Company

Contents

1. Getting Started 1

1.1 About This Manual 1

1.2 For Your Safety 1

Hazard Definitions 1

1.3 Care and Cleaning of the Sensors 2

1.4 XF Pod (DSP506XF and DSP508XF Sensors Only) 3

Precautions for Systems Equipped with XF Cordless Sensors 3

1.5 Charging Sensor Batteries (XF Sensors Only) 4

1.6 Vehicle Preparation 7

1.7 Equipment Components and Controls 7

2. Mounting Sensors 9

2.1 Mounting Sensors Onto Wheel Adaptors 9

Wheel Adaptor 175-285-1 10

Wheel Adaptor 175-321-1 with Ratchet Adaptor Locking Lever 11

2.2 Mounting Wheel Adaptors Onto Wheels 13

Wheels With No Rim Lip (Attaching To Outer Rim Lip) 13

Wheels With Rim Lip (Attaching To Inner Rim Lip) 14

2.3 Connecting Sensor Cables 15

Connecting Sensor Cables With Optional Rack Wiring Kit 15

Connecting Sensor Cables Without Optional Rack Wiring Kit 15

3. Compensating Sensors 17

3.1 General Compensation 17

3.2 3-Point Compensation 17

3.3 2-Point Compensation 19

3.4 Rolling Compensation 20

3-Point Procedure 20

2-Point Procedure 21

Procedure Limitations 22

3.5 Compensation Recall Mode 22

4. Operation Information 23

4.1 Adjusting Wheel Adaptor 175-285-1 Lock Lever 23

4.2 Sensor Level Check Procedure 24

4.3 Ride Height Measurement (Optional) 25

5. Maintenance 27

5.1 DSP506XF and DSP508XF Battery Replacement Instructions 27

5.2 DSP506XF and DSP508XF Hot Swap Battery Replacement Instructions 28

1. GETTING STARTED

1.1 About This Manual

This manual contains important operation, maintenance, and safety information for the DSP506, DSP506XF, DSP508, and DSP508XF sensors. It is supplemented by the alignment system console operation manual. Read and become familiar with the contents of these publications.

A calibrated set of DSP506, or DSP508, Series Sensors can be used with any Hunter aligner using WinAlign® software version 7.1 or higher. A calibrated set of DSP506XF, or DSP508XF Series Sensors can be used with any Hunter aligner equipped with a USB Electronic Assembly using WinAlign® software version 7.1 or higher.

A calibrated set of DSP506, or DSP508, Series Sensors can be used with 511 Aligners that have version 2.3 (or above) software.

NOTE:	DSP506XF and DSP508XF Series Sensors can not be used with the 511 Aligners.

1.2 For Your Safety

Hazard Definitions

Watch for these symbols:

⚠ **CAUTION:**	Hazards or unsafe practices that could result in minor personal injury or product or property damage.
⚠ **WARNING:**	**Hazards or unsafe practices that could result in severe personal injury or death.**
⚠ **DANGER:**	**Immediate hazards that will result in severe personal injury or death.**

These symbols identify situations that could be detrimental to your safety and/or cause equipment damage.

IMPORTANT SAFETY INSTRUCTIONS

Read all instructions.

Do not operate equipment with a damaged cord or if the equipment has been dropped or damaged until it has been examined by a qualified service representative.

Do not let cord hang over edge of table, bench or counter or come in contact with hot manifolds or moving fan blades.

If an extension cord is necessary, a cord with a current rating equal to or more that that of the equipment should be used. Cords rated for less current than the equipment may

overheat. Care should be taken to arrange the cord so that it will not be tripped over or pulled.

Always unplug equipment from electrical outlet when not in use. Never use the cord to pull the plug from the outlet. Grasp plug and pull to disconnect.

Let equipment cool completely before putting away. Loop cord loosely around equipment when storing.

To reduce the risk of fire, do not operate equipment near open containers of flammable liquids (gasoline).

Keep hair, loose clothing, neckties, jewelry, fingers, and all parts of body away from all moving parts.

To reduce the risk of electrical shock, do not use on wet surfaces or expose to rain.

Use only as described in this manual. Use only the manufacturer's recommended attachments.

ALWAYS WEAR OSHA APPROVED SAFETY GLASSES. Eyeglasses that only have impact resistant lenses are NOT safety glasses.

SAVE THESE INSTRUCTIONS

Read and follow all caution and warning labels affixed to equipment and tools.

Use caution when jacking the vehicle up or down.

Misusing this equipment can shorten the life of the equipment. To prevent accidents and/or damage to the sensors, use only Hunter recommended accessories.

Remove the sensors from the wheels before moving the vehicle. When sensors are not in use, store them on the sensor cabinet.

1.3 Care and Cleaning of the Sensors

When cleaning the sensors, use a mild window cleaning solution to wipe off the sensors and adaptors.

⚠ **CAUTION:**	Do not hose down or submerge the sensors in water. Do not spray cleaner on the sensor. This could damage the electrical system and optical components.

Keep wheel adaptor rods cleaned and lubricated. Lubricate as needed with a coating of light lubricant such as WD-40.

⚠ **CAUTION:**	Do not lubricate the center screw shaft of the wheel adaptor.

1.4 XF Pod (DSP506XF and DSP508XF Sensors Only)

The DSP506XF and DSP508XF sensors communicate with the aligner console using Extra High Frequency (XF). Radio waves are transmitted and received from the sensors and the XF Pod.

Occasionally the XF Pod may receive interference from electronic devices in the neighborhood (microwaves). The DSP506XF and DSP508XF sensors and XF Pod may be configured to use different radio frequencies to minimize interference.

The XF system transceiver generates power radio waves in the range of 2.4 GHz. Radio waves at these frequencies reflect off most objects, resulting in an indoor and outdoor range of approximately 100 feet (30 meters).

Interference has occurred when the XF Pod does not receive the radio waves. If this happens, move the mobile cabinet approximately 2 or 3 inches (51 or 76 mm) in any direction.

Temporary interference problems can be bypassed by connecting the sensors to the aligner console with the sensor cables.

Precautions for Systems Equipped with XF Cordless Sensors

The following precautions apply to the XF transceivers installed in the aligner console and the alignment sensors as part of the XF cordless sensor option.

Operation is subject to the following two conditions: (1) this device may not cause interference, and (2) this device must accept any interference, including interferences that may cause undesired operation of the device.

WARNING: This equipment has been tested and found to comply with the limits for a Class A digital device, pursuant to Part 15 of the FCC Rules. These limits are designed to provide reasonable protection against harmful interference when the equipment is operated in a commercial environment. This equipment generates, uses, and can radiate radio frequency energy and, if not installed and used in accordance with the instruction manual, may cause harmful interference to radio communications. Operation of this equipment in a residential area is likely to cause harmful interference in which case the user will be required to correct the interference at his own expense.

WARNING: Changes or modifications not expressly approved by the manufacturer could void the user's authority to operate the equipment.

1.5 Charging Sensor Batteries (XF Sensors Only)

Each sensor contains a 12VDC sealed lead acid rechargeable battery. To get the maximum life out of the batteries in the sensors, follow these three rules:

1. If the sensors are not in use, charge them.
2. Switch sensors “OFF” during charging if you are using cables.
3. Charge for eleven to thirteen hours, and/or provide an extended charge time (24 hours or longer) at least once a week.

NOTE:	Make sure the main power switch at the rear of the console is left “ON” and the outlet that supplies power to the aligner is on. “K”, “R”, and “P” cabinets are equipped with a computer, printer and CRT, but still provide power to the charging stations when using the standby power switch. This standby power switch is located on the front or side of the cabinet. The “S”, “SMT-CKD” and “W” cabinets do not have a standby power switch. The computer, printer, and CRT may be switched “OFF” independently from the main power switch.

To prevent premature degradation of battery performance, the charger has to replace 125% of the energy that was removed from the battery. It is not necessary to fully discharge the batteries before charging. However, ***it is important they be charged fully*.**

Charging information:

To recharge the batteries when the sensors are not in use, place the wheel adaptor sensor assemblies on the cabinet storage hanger and leave the main aligner power on. The “shoe” on which the sensor hangs acts as the – (neg) terminal, and the insulated contact is the + (pos) terminal.

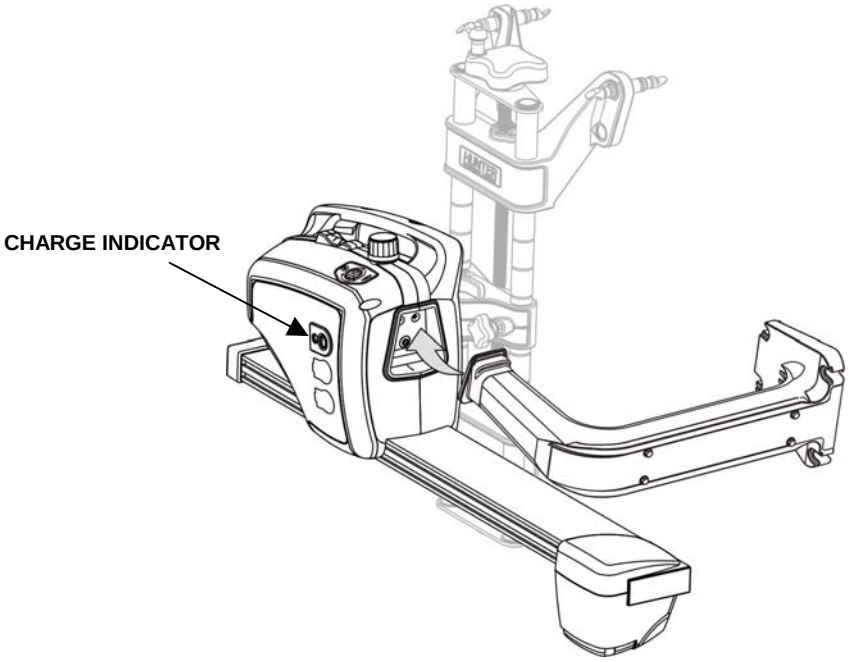

Any time batteries are being charged the charge indicator light on the sensor will be illuminated.

The charge indicator light turning from red to yellow is an indication that the charging mode has switched from a fast charge mode into a “trickle” charge mode. It does not mean that the battery is 100% charged. A fully discharged battery should be allowed to “trickle” charge a minimum of five hours to ensure a full charge. The charge indicator light turns green after approximately 6-8 hours of trickle, indicating the charger has entered “float” mode, which maintains the battery at full charge indefinitely.

You should expect at least 8 hours of continuous use from a fully charged battery.
If you are not getting this amount of usage time, the most likely cause is inadequate charging time.

Batteries that are consistently subjected to partial charging rather than full charge cycles **will permanently lose capacity.**

Charging time for a fully discharged battery with the sensor power switch turned “OFF” is 11 to 13 hours. Three or four times this interval would be required if the sensors were left “ON” during the charge cycle. **It is very important that the sensors be turned “OFF” during charging**. The sensor’s power switch is located on the front of the sensor above the two cable connectors. When the sensor is placed on the storage hanger, it will automatically turn off.

Charging overnight with the sensors’ power switches set to “OFF” will provide a proper charge.

Our charging system cannot over-charge the batteries. If you’re not using the sensors, charge them!

The sensor batteries are rated for 200 full charge/discharge cycles, making their life expectancy about one year for the customer that consistently discharges them 100%. Life expectancy for batteries with lower usage can be significantly longer.

100% Discharge	200 Cycles
50% Discharge	450 Cycles
30% Discharge	1000 Cycles

In a shop with extended service hours, there are some things you can do to prolong battery life:

When the sensors are not being used to perform alignments, they should be stored on the charging hangers with sensor power switched off. At a minimum, turn the sensors “OFF” between alignments. Any charging accomplished throughout the day helps maintain the batteries at peak performance, and helps extend their life.

If you have one day out of the week when alignments are not performed, you can let the sensors charge continuously for 24 hours or longer. This should “undo” the effects of any undercharging that occurred during the previous week. This sort of prolonged charging will only be effective at restoring full capacity to the batteries if performed regularly. Once a week is the recommended minimum.

When is it time to replace the batteries?

If after a full charge the battery does not last for the expected 8 hours, you should put it through one or two sessions of extended charge time (24 hours or longer). If the battery does not recover and start giving satisfactory cycle time, then it should be replaced. The sooner you catch the batteries losing capacity, the more likely an extended charge time will restore the battery to normal capacity. If the battery discharge time is only three or four hours, it is unlikely, that extended charge time will help significantly.

Additional information:

Any sensor that is powered up after being off for a while will initially indicate 100% capacity on the aligner screen. This is not an accurate indication of the charge state of the battery. The battery has a “surface charge” which dissipates quickly. Within 5 minutes of operation the on-screen battery level indicator will settle at its true value. The individual wheels on the screen indicate the actual battery condition and are color-coded. The following is an indication of battery charging condition:

Green = fully charged or partially charged

Yellow = approximately 20% charge left

Red (with battery recharging icon) = requires charging

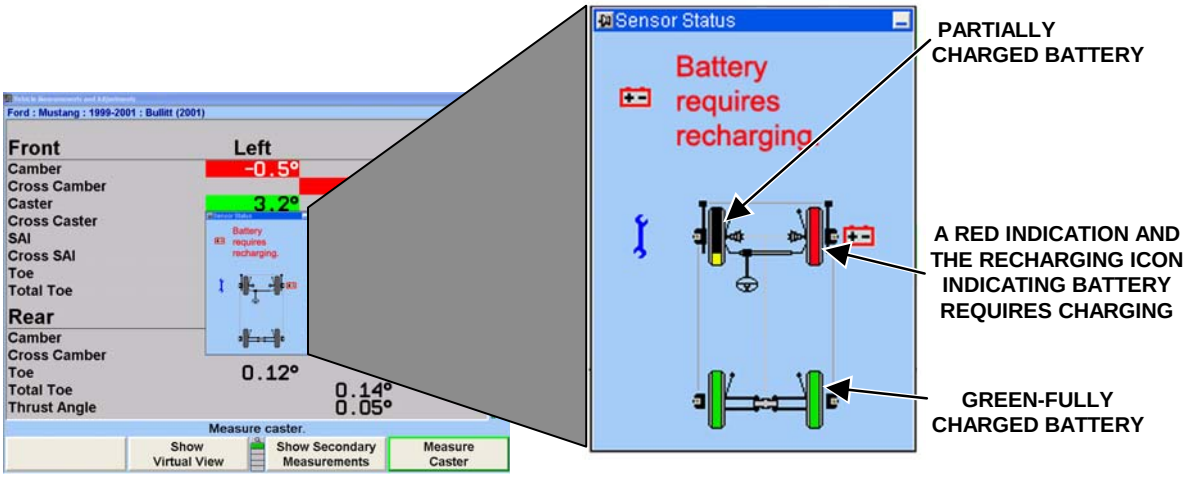

The charging circuit has been “fine tuned” to work specifically with Hunter batteries, part number 194-23-2 (Powersonic part number PS-1223). Substituting different batteries is not recommended.

A sensor that is being used, and has a low battery, can retain its measurement data if a “hot swap” battery replacement is made. Hot swapping the battery requires that the user replaces the battery, and then tilts the sensor completely forward, then completely backward. The sensor settings will be restored and the alignment can proceed.

Battery – Hunter 194-23-2 (Powersonic PS-1233)

1.6 Vehicle Preparation

Drive the vehicle onto the alignment lift/rack until the front wheels are centered on the turnplates.

Install wheel chocks to prevent the vehicle from rolling.

Raise the front and rear axles off the lift/rack. If your lift/rack does not have front and rear axle jacks, raise the axle on which you will be performing the alignment.

Lower the lift/rack leveling legs if your lift/rack is so equipped, and then lower the lift/rack onto the legs. If your lift/rack does not have leveling legs, lower the lift/rack onto the lift/rack locks.

Check and adjust the tire pressure, inspect for unevenly worn or mismatched tires.

Inspect all suspension and steering linkage components for wear or damage. A thorough inspection is important.

1.7 Equipment Components and Controls

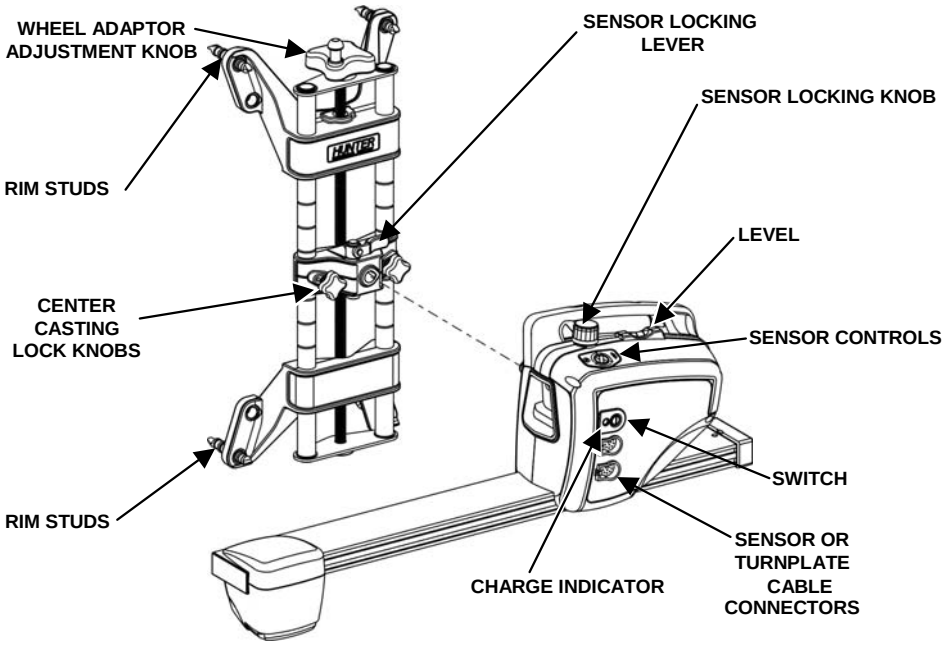

SENSOR AND WHEEL ADAPTOR

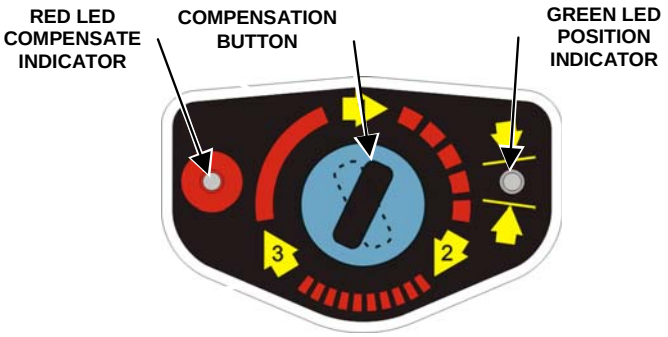

DSP506/DSP508 SENSOR CONTROLS

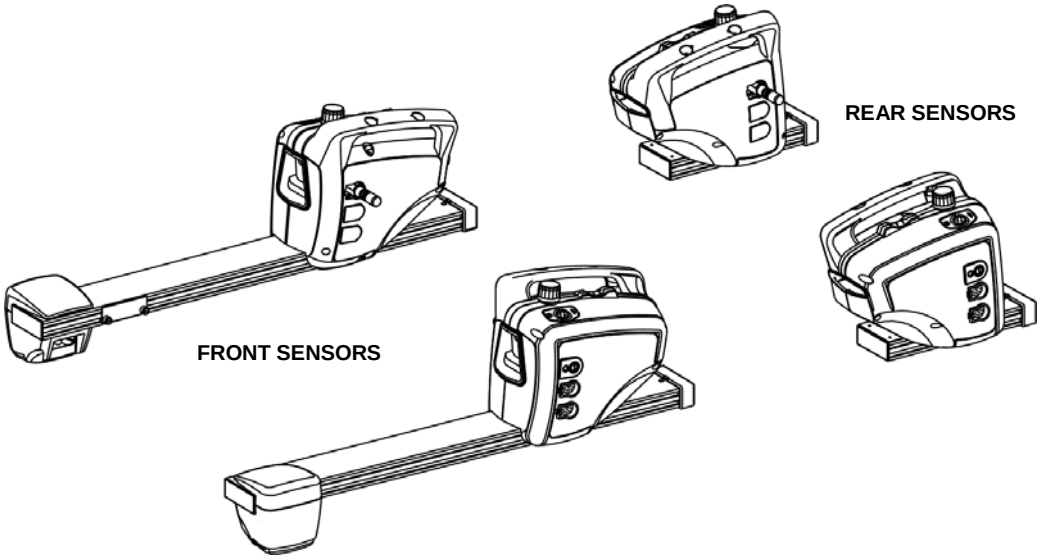

DSP506/506-XF SENSORS

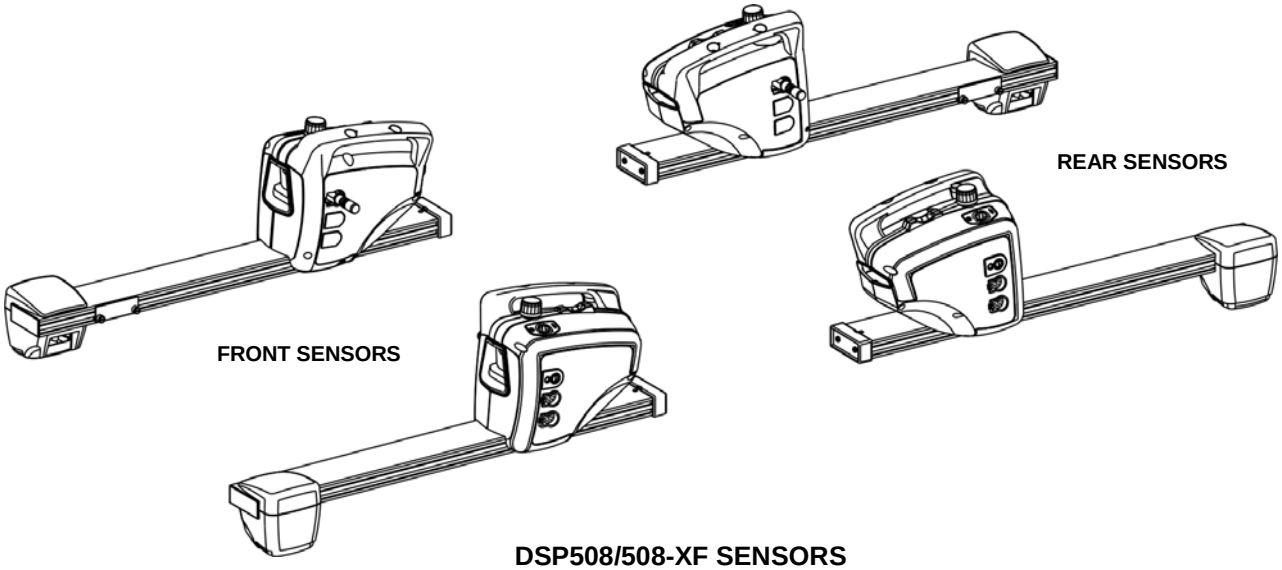

DSP508/508-XF SENSORS

2. MOUNTING SENSORS

2.1 Mounting Sensors Onto Wheel Adaptors

Sensors may be mounted on the wheel adaptors before mounting the wheel adaptors on the vehicle. In some cases, it may be easier to mount the wheel adaptor first and then mount the sensor onto the adaptor. Either method may be used.

Center the wheel adaptor center casting between the upper and lower castings. When the center casting is properly centered, a plunger ball will fall into the detent position on the adaptor rod.

Tighten both center casting lock knobs firmly. This will prevent the center casting from slipping down when the sensor is attached.

⚠ **CAUTION:**	Hand tighten center casting lock knobs as tight as possible (DO NOT USE TOOLS TO TIGHTEN).

⚠ **CAUTION:**	If the center casting lock knobs are not firmly tightened, runout compensation and alignment accuracy will be adversely affected.

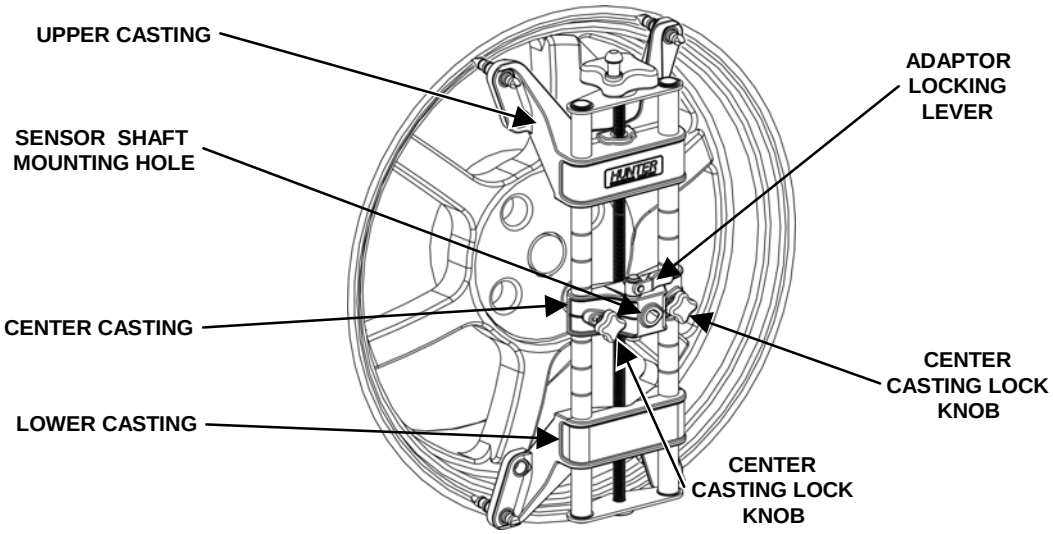

If detached, attach the sensor to the wheel adaptor by inserting the sensor mounting shaft (at the rear of the sensor) into the sensor mounting hole in the middle of the center casting.

NOTE:	The sensor shaft must be fully inserted into the sensor shaft mounting hole.

Wheel Adaptor 175-285-1

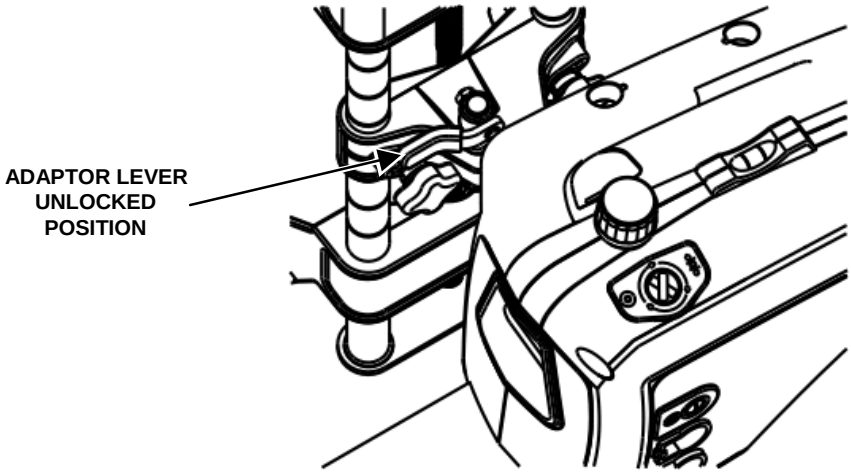

Rotate the adaptor locking lever clockwise to the locked position.

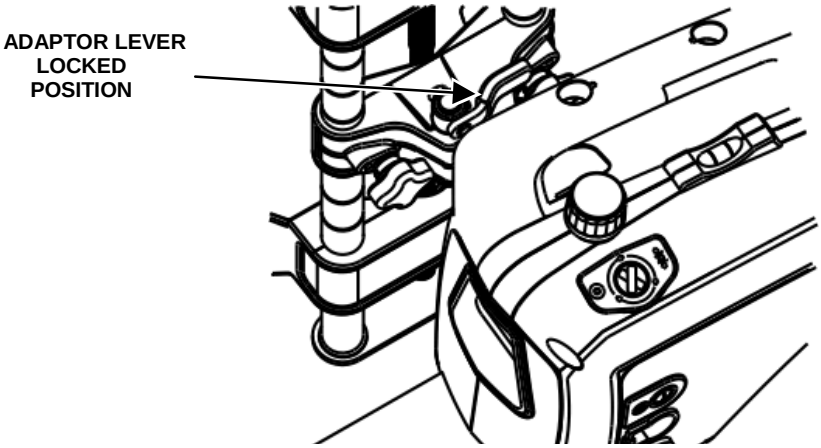

> ⚠ **CAUTION:** When mounting sensors to the wheel adaptors, the sensor shaft must be fully seated. Make certain that there is no play or looseness between the sensor shaft and the wheel adaptor. Rotate the wheel while holding the sensor. Listen and feel for movement between the sensor and wheel adaptor. Runout compensation and alignment accuracy will be adversely affected if there is any movement between the sensor and wheel adaptor. Sensors must fit tightly against the surface of the wheel adaptor or the lock may not hold. This could allow the sensor to fall and be damaged.

When the sensor is mounted, the sensor locking lever should be rotated using firm hand pressure. Tools should not be used to force the locking lever. If the lever can be rotated until it contacts the casting and is not fully locked, *refer to "Adjusting Wheel Adaptor Lock Lever" on page 23.*

Wheel Adaptor 175-321-1 with Ratchet Adaptor Locking Lever

Rotate locking lever clockwise to tighten. If upper casting prevents rotation of lever, either expand adaptor to move upper casting or re-position the lever by lifting lever up to disengage, rotating counter-clockwise, and lowering to re-engage.

Proceed until the shaft is locked tight to adaptor.

With shaft fully locked, re-position the lever to the 9 o'clock position by lifting lever up to disengage, rotating to 9 o'clock, and lowering to re-engage.

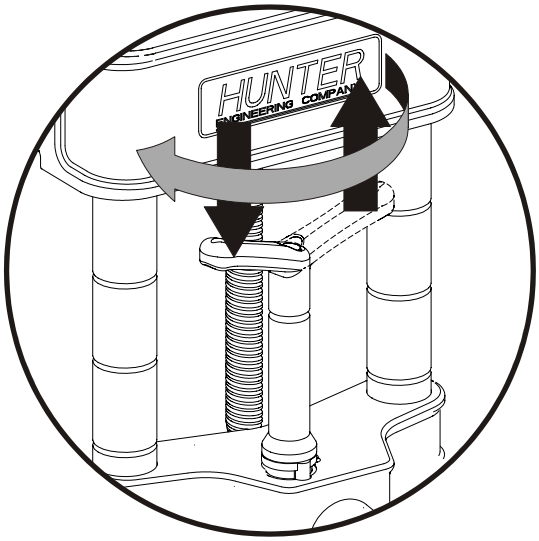

Re-position lever to 9 o'clock

The lever in the 9 o'clock position eliminates possible contact with upper casting or sensor during alignments.

Operation of Ratchet Adaptor Locking Lever after Initial Setup

To remove the sensor or reposition a target, loosen the lock by turning the lever counter-clockwise to the 3 o'clock position.

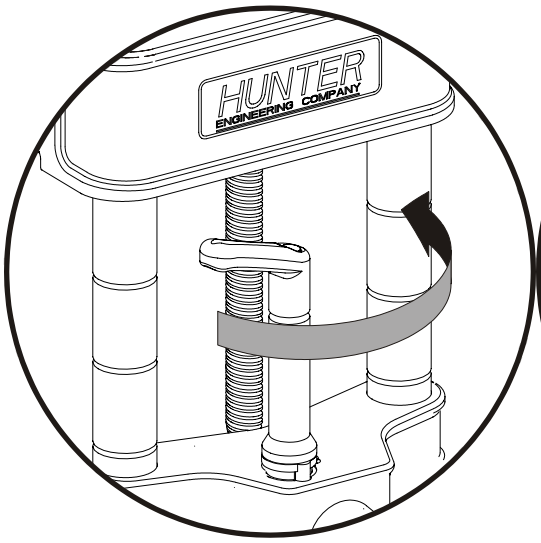

To loosen, turn lever from 9 to 3 o'clock

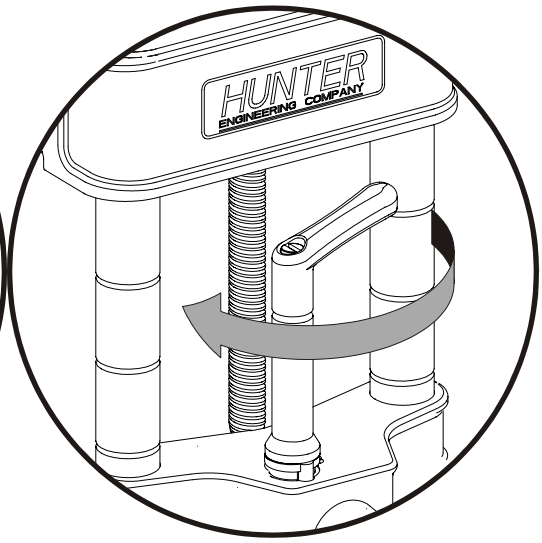

To lock, turn lever from 3 to 9 o'clock

To lock the sensor or target, tighten the lock by turning the lever clockwise to 9 o'clock position.

⚠ CAUTION: Failure to follow tightening and loosening procedures may result in damage to lever. Upper casting can damage lever if contact occurs when going for a large to small diameter rim. *Refer to figure below.*

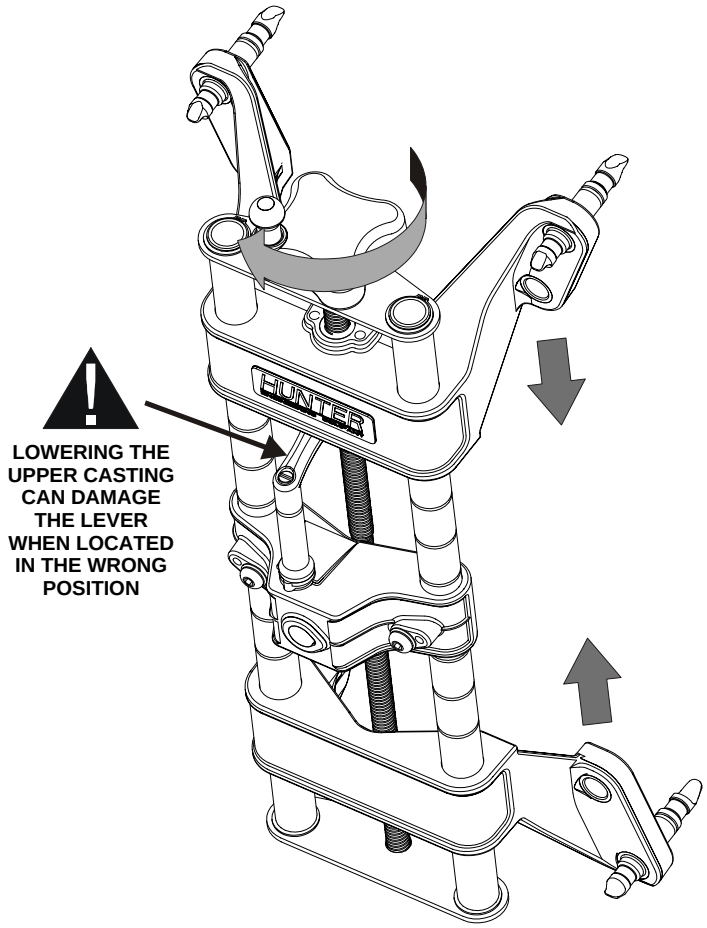

2.2 Mounting Wheel Adaptors Onto Wheels

Wheels With No Rim Lip (Attaching To Outer Rim Lip)

Position the wheel adaptor with the two upper external rim studs on the outside of the wheel rim.

Align the two lower external rim studs on the outside of the wheel rim and check that all four rim studs will engage the outside of the wheel rim.

Turn the adaptor adjustment knob to firmly attach the adaptor to the wheel.

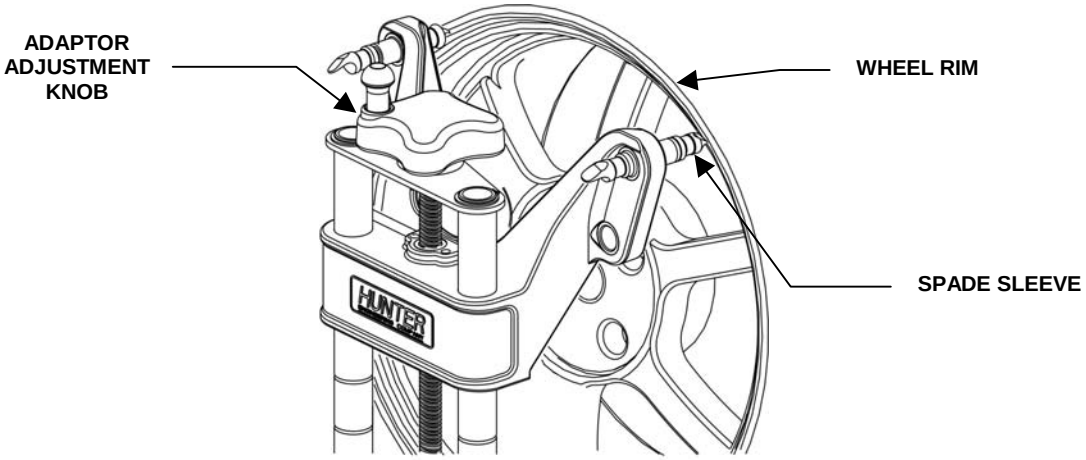

Test the security of the installation by lightly tugging on the wheel adaptor.

> ⚠ **CAUTION:** Do not allow the rim studs to slip on the wheel. Runout compensation and alignment accuracy will be adversely affected if the wheel adaptor is allowed to slip on the wheel.

Wheels With Rim Lip (Attaching To Inner Rim Lip)

Position the wheel adaptor with the two lower rim studs engaging the lower wheel rim lip.

Align the two upper rim studs with the upper wheel rim lip and check that all four studs will engage the inner portion of the rim lip.

Turn the adaptor adjustment knob to firmly attach the adaptor to the wheel.

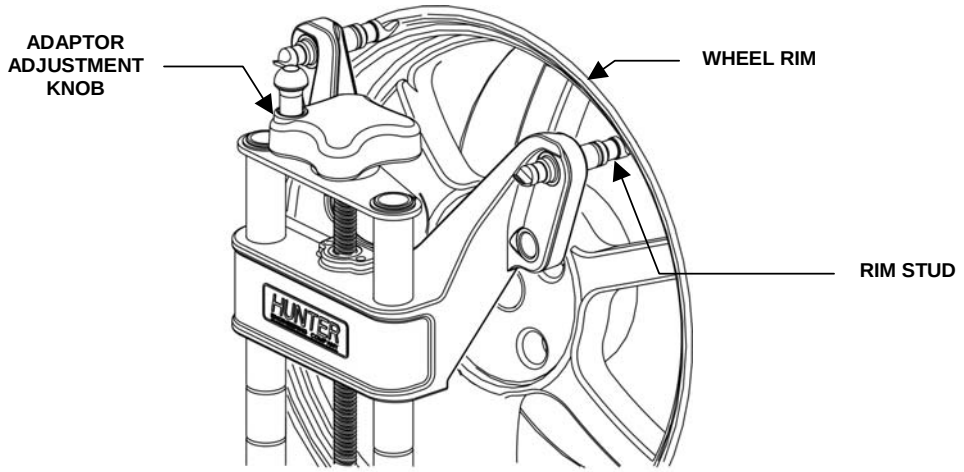

Test the security of the installation by tugging on the wheel adaptor.

⚠ **CAUTION:**	Do not use rim studs on alloy or clear coat wheels. Rim studs can damage these wheels.

⚠ **CAUTION:**	Do not allow the rim studs to slip on the wheel. Runout compensation and alignment accuracy will be adversely affected if the wheel adaptor is allowed to slip on the wheel.

2.3 Connecting Sensor Cables

Connecting Sensor Cables With Optional Rack Wiring Kit

Connect each sensor to a rack wiring box with short sensor cables (either connector may be used).

Connect a front rack wiring box to the console with a long sensor cable (any available connector may be used).

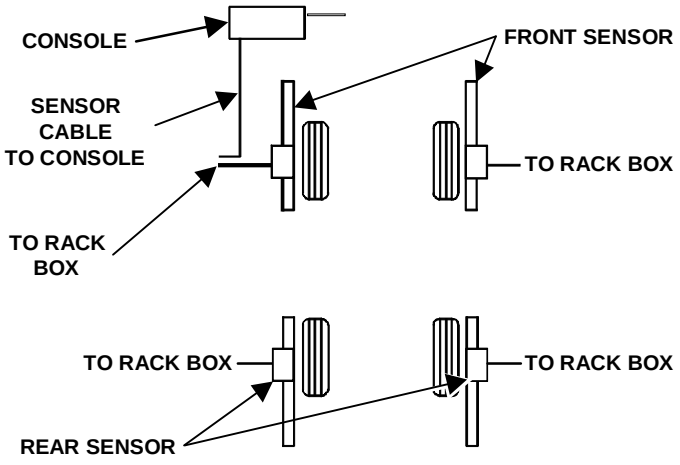

Connecting Sensor Cables Without Optional Rack Wiring Kit

Connect the two rear sensors to the front sensors using sensor cables (either front sensor connector may be used).

Connect the two front sensors to the console using sensor cables (any available console cable socket may be used).

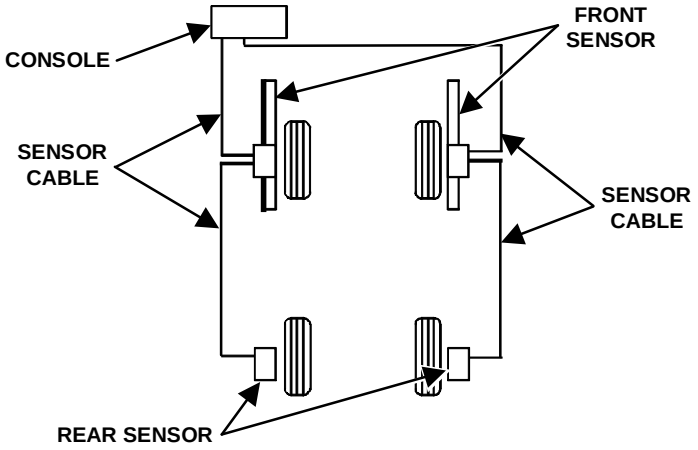

3. COMPENSATING SENSORS

3.1 General Compensation

The sensors must be compensated to eliminate errors in angle measurements caused by runout of the wheel, wheel adaptor, and sensor shaft.

The default setting for the alignment console can be set for either 2 or 3-point compensation. However, the operator still has the option to override the default setting by pressing the “2-Point” or “3-Point” Compensation softkey on the “Compensation Control” screen on the aligner console.

The sensors must be “ON” to compensate.

If a previously compensated sensor should require re-compensation, pressing the sensor compensate button twice within four seconds will retake the first reading for that sensor.

Do not disturb the sensor until the red LED responds.

Sensors may be compensated in any order; however, these precautions must be followed:

> If a sensor is removed from a wheel, that sensor must be re-compensated when reinstalled. The other sensors do not need re-compensation.
>
> During 2-point compensation and normal operation, be certain no obstructions are blocking the infrared beams between the sensors. Should a blockage occur, the affected sensor(s) shown in the illustration on the CRT will flash on and off and the displayed toe measurement of the sensor(s) will go blank until the obstruction is cleared.
>
> When compensating sensors that are mounted to the vehicle drive wheels, place the transmission in NEUTRAL.
>
> The lift/rack should be level on the leveling legs.

3.2 3-Point Compensation

All sensors need not be mounted before starting compensation. The sensors may be mounted and compensated individually, or compensation may be performed on 1, 2, 3, or all 4 sensors at once.

Raise either the front or rear axles, or both, while remembering to use the safety on all jacks.

> ⚠ **WARNING: If only one axle is raised, chock wheels on the axle that is not being raised during compensation, to prevent the vehicle from rolling.**

Turn sensors on if necessary and select any one of the sensors for compensation. The starting position of the wheel adaptor does not matter. The green LED will be on.

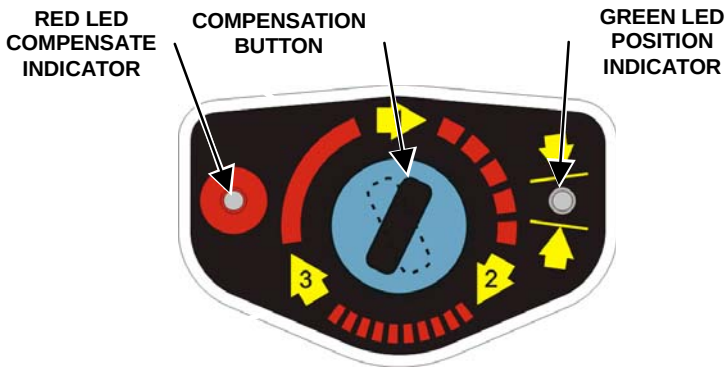

Hand-tighten the sensor lock knob.

Rotate the wheel until the sensor is level (as indicated by the spirit level on top of the sensor).

Press the compensate button. Do not disturb the sensor until one red LED begins to blink and the green LED turns off, indicating that the measurements have been stored.

Loosen the sensor lock knob and rotate the wheel 120°, left or right, until the green LED turns on. Hand tighten the sensor lock knob and rotate the wheel to level the sensor.

NOTE:	It is recommended that the front wheels of front wheel drive vehicles be rotated in the forward direction to keep from disturbing the sensor on the opposite front wheel.

With the green compensate LED on, press the compensate button. Do not disturb the sensor until the red LED begins to blink faster and the green compensate LED turns off to indicate that the measurements have been stored.

Loosen the sensor lock knob and rotate the wheel 120° more, until the green LED turns on. Hand tighten the sensor lock knob and rotate the wheel to level the sensor.

With the green LED on, press the compensate button. Do not disturb the sensor. Wait for the sensor to save the measurement. The red LED and the green LED will stay on.

Loosen the sensor lock knob.

The sensor is now compensated. Repeat this procedure for the remaining sensor(s).

NOTE:	All sensors should be level, but unlocked, with cables hanging straight down (if being used) to minimize tilt of the sensors. Avoid rapid steering motion that may cause sensors to swing vertically, which can cause them to come into contact with the rack, or even dislodge from the wheel.

Remove the lock pins from the turning angle gauges and rear slip plates.

Apply the parking brake and place the transmission in park if applicable.

Lower the vehicle onto the turning angle gauges.

Jounce the vehicle.

3-Point compensation is complete. The green LED and red LED on each sensor will be on.

After 3-point compensation, the wheel may be rotated to any position without affecting the alignment measurements.

Continue the alignment procedure.

3.3 2-Point Compensation

NOTE:	To compensate the sensors, both the front and rear sensor on that side of the vehicle must be mounted, and the longitudinal toe beam must not be obstructed. Do not rotate one wheel while the measurements are being saved at the other. The preferred method is to compensate the sensors separately.

Raise either the front or rear wheels of vehicle.

⚠ **WARNING:**	**Chock wheels on axle that is not being raised during compensation to prevent vehicle rolling.**

Loosen the sensor lock knobs of all the sensors.

Select any one of the sensors for compensation. The green LED will be on.

Rotate the wheel adaptor to any desired position. Compensation should preferably begin (and end) with the wheel adaptor in the vertical position to provide a visual indication that the vehicle wheel has not rotated.

Snug down the sensor lock knob.

Rotate the wheel until the sensor is level (as indicated by the level on top of the sensor).

Press the compensate button. Do not disturb the sensor until the red LED begins to flash and the green LED turns off indicating that the measurement has been saved.

Loosen the sensor lock knob.

Rotate the wheel clockwise 180° until the green LED comes on. When the green LED is on, snug down the sensor lock knob and rotate the wheel to level the sensor.

Press the compensate button. Do not disturb the sensor. Wait for the sensor to save the measurement. The red LED and green LED will stay on, indicating that the measurement has been saved and compensation is complete.

Loosen the sensor lock knob.

The sensor is now compensated. Repeat this procedure for the remaining sensor(s).

When using the 2-point compensation method, the wheel adaptor must remain in the same rotational position as it was when its compensation was completed. The green LED will be on when the wheel is rotated to the correct position.

NOTE:	All sensors should be level, but unlocked (unless directed to level and lock sensors during the WinAlign operation sequence), with cables hanging straight down to minimize tilt of the sensors during caster measurement turn. If sensors are not locked, then avoid rapid steering motion that may cause sensors to swing vertically, which can cause them to come into contact with the rack, or even dislodge from the wheel.

Remove the lock pins from the turning angle gauges and rear slip plates.

Apply the vehicle parking brake and place the transmission in park.

Lower the vehicle onto the turning angle gauges.

Jounce the vehicle.

2-Point compensation is complete. The green LED and red LED on each sensor will be on.

Continue the alignment procedure.

3.4 Rolling Compensation

NOTE:	This procedure can be performed using the 3-point or 2-point compensation method.

⚠ **CAUTION:**	This procedure should be performed only on a pit-installed rack, and should not be performed on a lift or above-ground rack. The vehicle could roll off the lift/rack, causing severe personal injury and damage to the vehicle, or rack.

From the “Control Compensation” popup screen, press “Use Rolling Compensation.” The “Rolling Compensation” popup screen will appear.

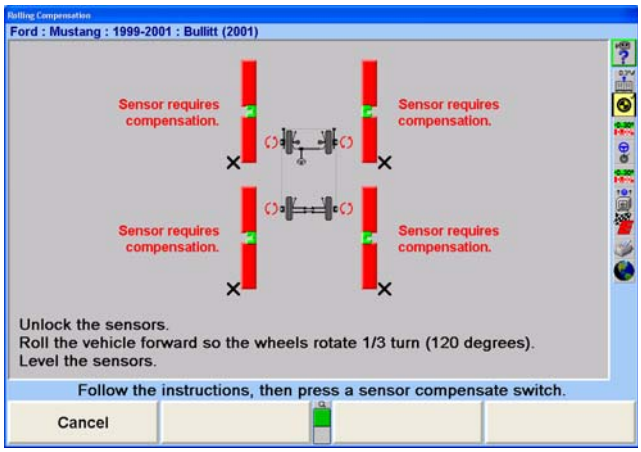

3-Point Procedure

Position the vehicle so that it can be rolled forward, with the wheels able to rotate 240°.

Level and lock the sensors, then press “Ready.” When the sensors are stable, the measurements will be saved.

NOTE:	Beginning the rolling compensation procedure removes any old compensation from the sensors.

The screen instructs you to roll the vehicle forward so the wheels rotate 120°. Vertical bar graphs show when this is correct. Unlock the sensors and roll the vehicle forward until the arrows are in the null position.

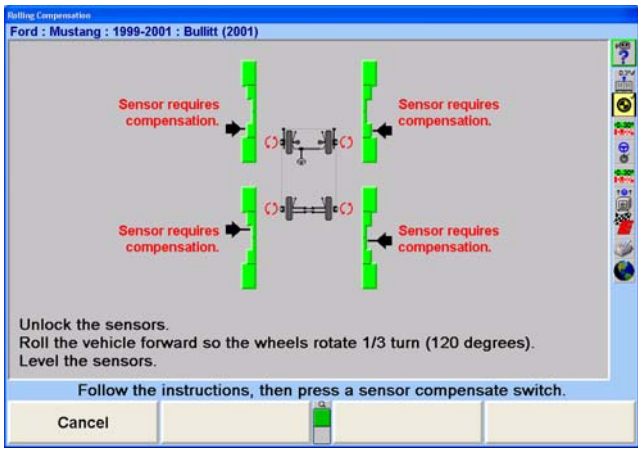

Level and lock the sensors. The green LED must be on at each sensor.

Press and release the compensate switch on any ONE sensor. When the sensors are all stable, the measurements will be saved.

The screen instructs you to roll the vehicle forward so the wheels rotate another 120°. Vertical bar graphs show when this is correct. Unlock the sensors and roll the vehicle forward until the arrows are in the null position.

Level and lock the sensors. The green LED must be on at each sensor.

Press and release the compensate switch on any ONE sensor. When the sensors are all stable, the measurements will be saved. The “Rolling Compensation” popup screen will close.

NOTE:	The 3-point rolling compensation procedure need not end with the vehicle in the proper position to adjust the alignment. The wheels are allowed to rotate after the procedure is performed.

2-Point Procedure

Position the vehicle so that it can be rolled forward, with the wheels able to rotate 180°.

Level and lock the sensors, then press “Ready.” When the sensors are stable, the measurements will be saved.

NOTE:	Beginning the rolling compensation procedure removes any old compensation from the sensors.

The screen instructs you to roll the vehicle forward so the wheels rotate 180°. Vertical bar graphs show when this is correct. Unlock the sensors and roll the vehicle forward until the arrows are in the null position.

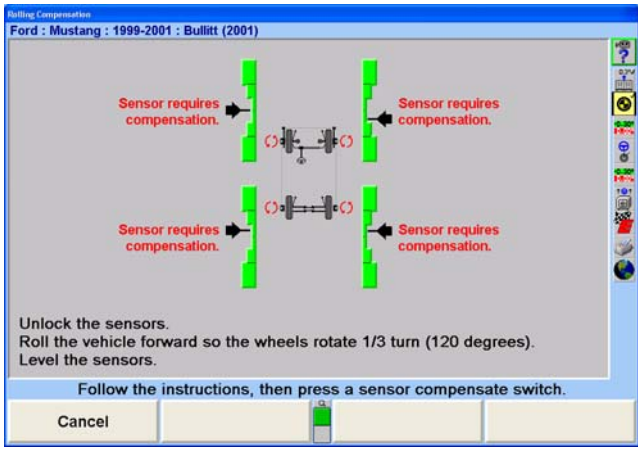

Level and lock the sensors. The green LED must be on at each sensor.

Press and release the compensate switch on any ONE sensor. When the sensors are all stable, the measurements will be saved. The “Rolling Compensation” popup screen will close.

NOTE:	The 2-point rolling compensation procedure MUST end with the vehicle in the proper position to adjust the alignment. The wheels are NOT allowed to rotate after the procedure is performed.

Procedure Limitations

> ⚠ **CAUTION:** This procedure must be performed carefully, or inaccurate alignment measurements will result. The axles must always "point" exactly the same direction as the vehicle rolls during the procedure. A change in the pointing direction of an axle during the procedure will be interpreted by the system as runout.

1. Do not allow the front wheels to change their "steering" direction as the vehicle is rolled.
2. Do not perform the procedure on a bumpy or uneven surface.
3. Do not perform the procedure on a vehicle that has uneven or out-of-round tires.
4. Do not push or pull the vehicle by the tires or wheels during the procedure.
5. Push the vehicle only forward during the procedure. Do not push the vehicle forward, then backward.
6. Do not use the brakes during the procedure.

3.5 Compensation Recall Mode

If sensor power is temporarily interrupted after compensation, a short-term backup memory on the sensor may hold compensation values until power is restored. When power is restored, the sensor will indicate that it has valid compensation values by illuminating the green compensation indicator while flashing the red compensation indicator. If the sensor has not been dismounted from the vehicle wheel, the compensation procedure does not have to be repeated. Compensation can be restored by unlocking the lock knob and tilting the sensor in either direction until the red indicator stops flashing and stays on. Afterwards, restore the sensor to its original position. If re-compensation is required, pressing the compensation button twice within four seconds will retake the first reading for that sensor. Refer to the compensation section for complete compensation procedure.

4. OPERATION INFORMATION

4.1 Adjusting Wheel Adaptor 175-285-1 Lock Lever

The wheel adaptor lock lever should not contact the wheel adaptor center casting before the sensor shaft is tightly secured. An adjustment can be made to the lock lever assembly to restore its full tightening capability.

Turn the adjusting thumbscrew to adjust the lock lever adjustment screw as illustrated below (do not remove the assembly). With the sensor fully seated in the adaptor and firm hand force applied to the lock lever, adjust the lock lever screw from the bottom side of the center casting so the lever will stop approximately 30° short of contacting the center casting.

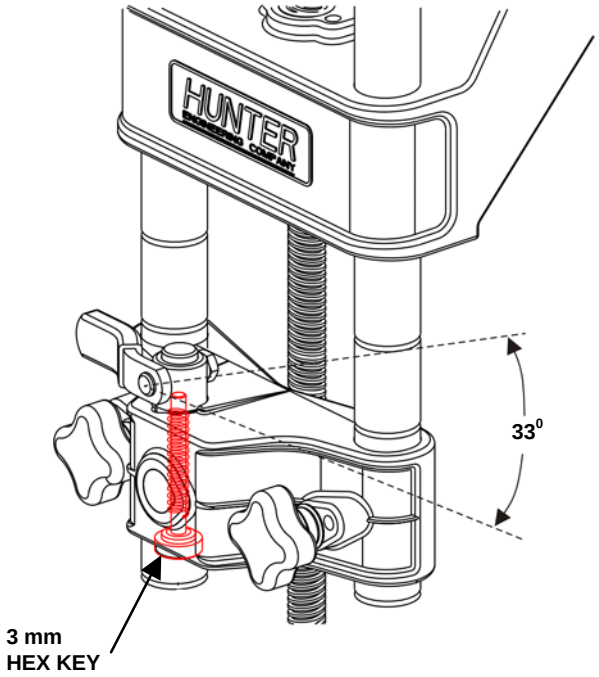

NOTE:	Normal manufacturing variations will allow the clearance between the lever and casting to change if different sensors are mounted to a given adaptor. This variation is acceptable if the lever has enough travel to fully tighten the lock onto the shaft.

4.2 Sensor Level Check Procedure

To achieve an accurate alignment, it is important that the sensors hang level when the sensor lock knob is loosened. A sensor must be balanced correctly to hang level.

To check the balance of a sensor:

Mount the sensor on a wheel adaptor.

Mount the wheel adaptor onto a wheel without connecting the sensor cable.

With the sensor lock knob loosened, wait until the sensor does not rock on the wheel adaptor.

Observe the level in the sensor.

If the bubble is in the center of the level, as shown below, the sensor is balanced.

NOTE:	A level reminder icon will appear on the vehicle plan view indicator when a sensor is severely out of level.

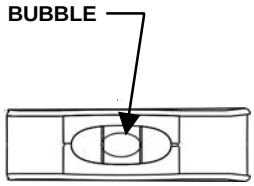

If the bubble is off to one side of the level, as shown below, the sensor must be adjusted to restore the sensor to level.

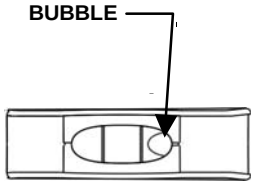

To balance sensors, loosen the screws securing the weight to the toe arm. Slide the weight in the proper direction to center the bubble in the level.

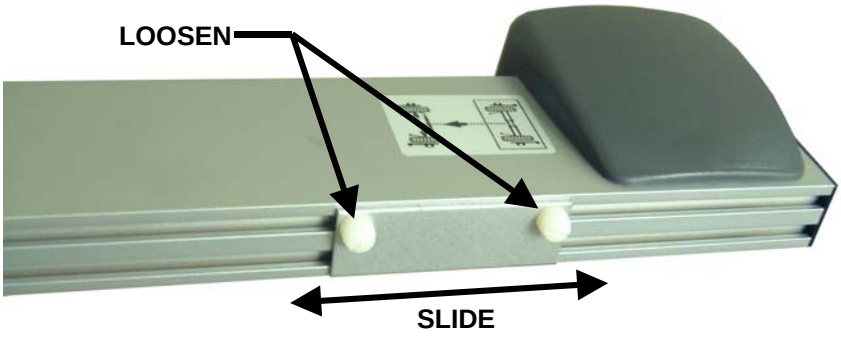

Contact your local Hunter Service Representative if you need assistance with balancing adjustments.

4.3 Ride Height Measurement (Optional)

When equipped with the ride height option, the DSP500 Series Sensors will take accurate ride height (RH) measurements using a ride height tool and compare them to the stored specifications. The CRT must be displaying the "Ride Height" screen to measure ride height. The ride height procedure can be accessed from the primary screen labeled “Make Additional Adjustments.”

From the “Additional Measurements Procedures” screen, select “Ride Height” and press “OK.” The following “Ride Height” screen will appear as shown below.

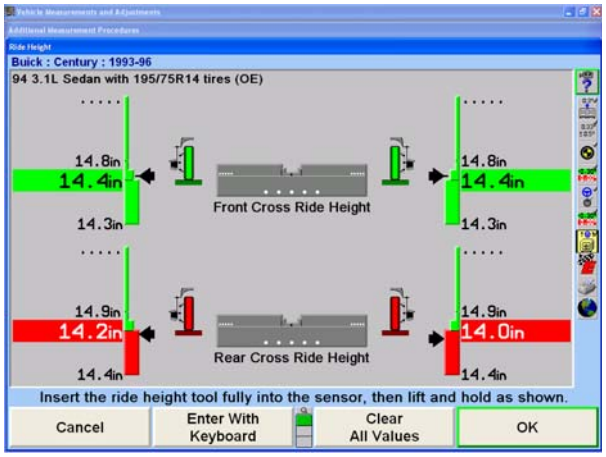

Lower the vehicle’s axles if they are raised, and then jounce the vehicle.

Level and lock the sensor on the wheel to be measured.

Insert the end of the ride height tool into the sensor with the groove in the rod facing the rear of the sensor as shown below. It may be necessary to slightly rotate the rod of the ride height tool in the sensor so the groove in the rod engages the key in the sensor. Lower the tool until its shoulder bottoms out on the sensor.

NOTE:	Failure to fully seat the ride height tool shoulder on the sensor will cause inaccurate RH measurements.

Raise the RH tool until the horizontal arm touches the underside of the wheel arch above the center of the wheel.

Hold the RH tool in that position until the console indicates a reading has been taken.

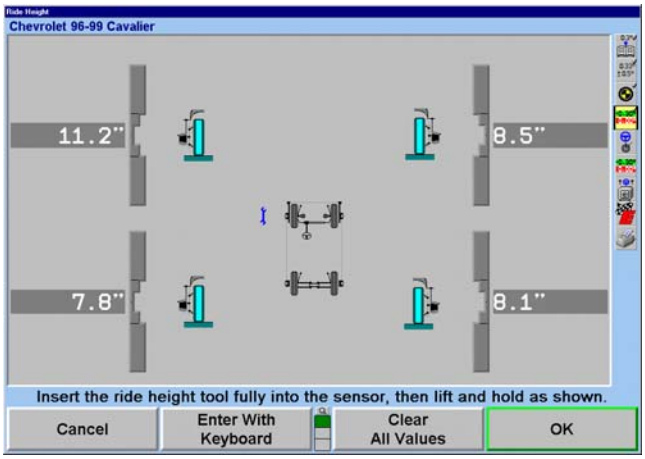

Remove the RH tool and repeat this procedure with the other sensors.

5. MAINTENANCE

5.1 DSP506XF and DSP508XF Battery Replacement Instructions

This procedure provides instructions for replacing the lead acid battery in DSP506XF and DSP508XF wireless sensors.

Remove the battery as follows:

1. Depress the upper and lower release buttons on the battery cover and remove.
2. Tilt sensor back and remove battery.

Replace the battery as follows:

1. Insert the battery with the positive terminal on top.
2. Replace the battery cover.

NOTE:	The sensors are designed to power-up when the battery is replaced.

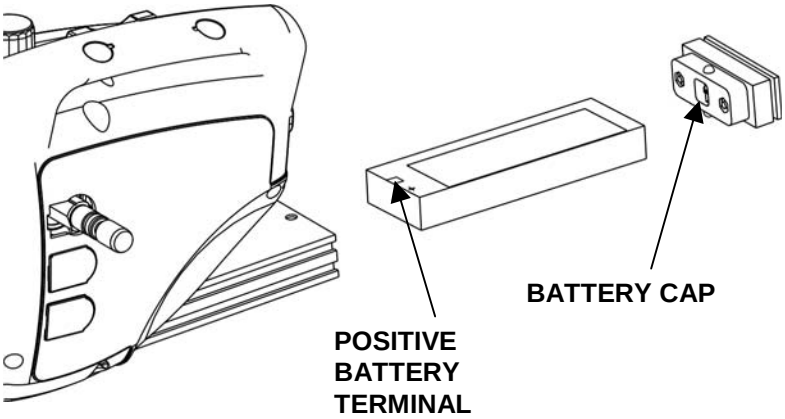

5.2 DSP506XF and DSP508XF Hot Swap Battery Replacement Instructions

This procedure provides instructions for hot swapping the lead acid battery in DSP506XF and DSP508XF wireless sensors during an alignment procedure. Hot swapping the battery will recall/retain the information in the sensor if the alignment procedure is still in progress.

If the sensor was compensated prior to swapping the battery, the sensor will indicate it by illuminating the green compensation indicator while flashing the red compensation indicator.

1. Remove and replace the battery as described above.
2. After unit has powered up, unlock the lock knob and tilt the sensor in either direction until the red indicator stops flashing and stays on. Do not remove the sensor or wheel adaptor from the wheel.
3. Restore the sensor to its original position.